	Bijlagelijst ZW380kv Wabo Gemeente Reimerswaal, d.d. 29 april 2015					
Map	**Titel**	**Datum**	**Versie**	**Tekening/documentnummer**	**Vergunning**	**Opmerkingen**
1	***Overzichtskaart en Mastenlijst***					
	Overzicht Zuid-West 380 kV Borssele-Rilland	feb-15		150227p_zw380_ZW-W_zeeland_A2	Wabo bouwen, in- en uitrit, werk of werkzaamheden uitvoeren en strijdigheid RO	
	Tracé ZW380kV Gemeente Reimerswaal	21-4-2014		150421p_zw-w380_Reimerswaal_A0	Wabo bouwen, in- en uitrit, werk of werkzaamheden uitvoeren en strijdigheid RO	
	Mastenlijst Wabo Reimerswaal DT2	20-2-2015			Wabo bouwen	
2	***Vergunningenkaarten***					
	150428 vergunningenkaarten DT2 VKA 2.1	28-4-2015	3	315112-T002-C-verg	Wabo bouwen, in- en uitrit, werk of werkzaamheden uitvoeren en strijdigheid RO	Blad 1062 t/m 1104
3	***Kadastrale Gegevens***					
	Lijst met kadastrale gegevens	29-4-2015	1.0		Wabo bouwen, in- en uitrit, werk of werkzaamheden uitvoeren en strijdigheid RO	
4	***Lengteprofielen***					
	Section DT2 Krabbendijke Alternative 4 (Structure 1050 - 1104)	20-2-2015	P2	ZW380_LPD_DT2-P2_ALT-4	Wabo bouwen	Blad tot 3 en met 15 van 15
5	***Vergunningendocument***					
	Engineering Verbinding ZW380 Deelgebied2: WAP - Rilland Vergunningendocumentatie	17-3-2014	9.0	13-0891	Wabo bouwen	Inclusief tekeningen en berekeningen van tijdelijke masten en jukken in de onderliggende mappen.
6	***Ontwerpgegevens Wintrackmasten***					
A	*Ontwerpdossier Mastenfamilie*	17-3-2015	12.0	13-3149	Wabo bouwen	Inclusief berekeningen en tekeningen van masten en fundaties in de onderliggende mappen
B	*Beton Hybride*					
	Constructieberekening hybride masten	6-3-2014	4	74102194-ETD/POL 13-2623	Wabo bouwen	
	Constructieberekening betonnen masten	6-3-2014	4	74102194-ETD/POL 13-2622	Wabo bouwen	
	Constructieberekening funderingen voor betonnen en hybride masten	22-4-2015	6	74102194-ETD/POL 13-3180	Wabo bouwen	
7	***Aansluitgegevens Station Kruiningen***					
	Opstijgpunt Kruiningen, Basisontwerp Deeltracé 2	19-9-2011		GSP-RLL150-00-31-0002	Wabo bouwen	
	Tracé tekening Kruiningen	15-10-2012	C	TE113900-D2-T09	Wabo bouwen	Blad 1
	Luchtfoto Opstijgpunt Kruiningen	11-2-2015	OSP_Kruingingen	150211p_zw380-w_OSP_kruingingen	Wabo bouwen	
	Rapportage 150kV Tracé Zuid-West Kabeltracé 2: Kruiningen	25-4-2014	Definitief	B02032.000500.0100		
8	***Constructieve veiligheid***					
	Basisnota constructieve veiligheid	2-12-2014	2.0	14-3185	Wabo bouwen	
9	***Rapport Archeologie***					
	Bureauonderzoek Archeologie; Hoogspanningsverbinding Zuid-West 380 kV; Deeltracé 2	8-2-2013	concept	076922603:0.2	Wabo bouwen, in- en uitrit, werk of werkzaamheden uitvoeren en strijdigheid RO	Definitieve versie wordt later aangeleverd, conform gemaakte afspraken met gemeente op 27 augustus 2014.
	ZuidWest 380kV Hoogspanningsverbinding Borssele-Tilburg; Deelrapportage Zeeland, inventariserend veldonderzoek door middel van verkennende boringen	10-6-2014	revisie 1	GM-0135317	Wabo bouwen, in- en uitrit, werk of werkzaamheden uitvoeren en strijdigheid RO	Definitieve versie wordt later aangeleverd, conform gemaakte afspraken met gemeente op 27 augustus 2014.
10	***Bodemrapport***					
	Grondonderzoeken ZW380kV Deeltracé 2 Verkennend (water)bodem- en asbestonderzoek	28-4-2015	D1	GM-0159560	Wabo bouwen, in- en uitrit, werk of werkzaamheden uitvoeren en strijdigheid RO	

11	***Beeldkwaliteitsplan***					
	Beelkwaliteiteisen Wintrack II	dec-14			Wabo bouwen, in- en uitrit, werk of werkzaamheden uitvoeren en strijdigheid RO	
12	***CRa Advies Wintrackmasten***					
	Advies Esthetisch Concept Wintrackmasten	2-10-2014		RBM-20140102	Wabo bouwen	
	Reactie TenneT TSO op Advies CRa	8-1-2015		LP-2015-001	Wabo bouwen	
13	***Situatietekeningen***					
	VKA 2.1 Gemeente Reimerswaal	21-4-2014	VKA 2.1	150414p_zw-w380_Reimerswaal	Wabo bouwen, in- en uitrit, werk of werkzaamheden uitvoeren en strijdigheid RO	
14	**Ontwerpgegevens Mast 1084**					
	380kV Hoogspanningsmast in de Oosterschelde Voorontwerp mastfundering en gronddam	april-15	R1	MW-AF2015106	Wabo bouwen	
	Terrein t.b.v. 380kV mast 1084	29-4-2015	A	BD5948-101-100-1323-100	Wabo bouwen	
	Terrein t.b.v. 380kV mast 1084 Werkeiland	29-4-2015	A	BD5948-101-100-1323-101	Wabo bouwen	
	Terrein t.b.v. 380kV mast 1084 Details en dwarsprofielen	29-4-2015	A	BD5948-101-100-1323-800	Wabo bouwen	
	Terrein t.b.v. 380kV mast 1084 Details en dwarsprofielen	29-4-2015	A	BD5948-101-100-1323-801	Wabo bouwen	

15 Ontwerpgegevens hekwerken

Bijlage 6

Ontwerpgegevens Wintrackmasten

ZWW4S400

Fundatie berekening

Bijlage CN

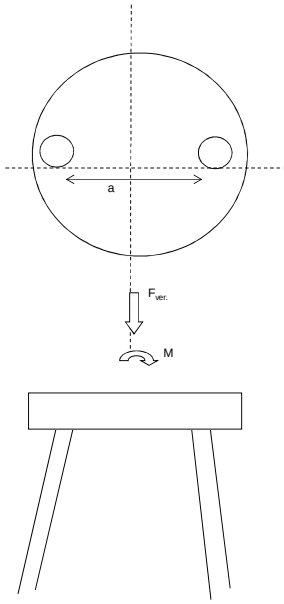

Fundatie ontwerp:
Heipaal

Afmetingen	b	400	mm	
	d	400	mm	
omtrek paal	$O_{p;gem}$	1,6	m	
schoorstand		8	:1	
α		7,125	graden	
Opstort	Diameter	3,8	m	
	Hoogte	1,8	m	
	Inhoud	20,4	m^3	
	e.g.	490	kN	
Onderplaat	Diameter	9,0	m	
	Hoogte	1,0	m	
	Inhoud	64	m^3	
	e.g.	1527	kN	
Hart paal tov rand fund.		0,6	m	
Optreden krachten				
e.g. mast		468	kN	
Fgeleiders		167	kN	
Maximale dwarskracht		508	kN	
Fmax vert (druk)		729	kN	
Fmin vert (trek)		547	kN	
Maximale moment		21889	kNm	
Moment				
F_{diag}		3012	kN	
F_{hor}		508	kN	
F_{ver}		2989	kN	
M_{hor} (tgv F_{hor})		1423	kNm	
M_{tot}		23312	kNm	reductie door opwaarste kracht water
F=M/a		2989	kN	
Verticaal reactiekracht				
Fwater (trek)		840	kN	
Fgrond (druk)		1411	kN	
Fgrond (trek)		1176	kN	
Fdmax (druk)		2421	kN	
Ftmax (trek)		1206	kN	
Fdtot (druk)		5410	kN	
Fttot (trek)		1783	kN	
Palen druk		5	(-)	
Palen trek		6	(-)	
Totaal palen		12	(-)	Per fundering

ZWW4S400

TREKPALEN volgens CUR 2001-4 par. 8.

$$F_{r;trek;d} = \int_0^L O_{p;gem} \times p_{r;z;d} \times dz$$

Bijlage CN

Bepaling opneembare paalbelasting op druk

heipaal

Afmeting paal	b	0,40	m
	b	0,40	m
omtrek paal	$O_{p;gem}$	1,60	m
paalfactor	α t	0,007	
aantal palen	M	1	
aantal sonderingen	N	1	
factor invloed aantal sonderingen	ξ	0,75	
conusweerstand over wrijvingstraject	$q_{c;z;max}$	15	MPa
	$q_{c;z;rep}$	11,25	MPa
materiaalfactor	$\gamma_{m;b4}$	1,4	
factor, wisselende belastingen	$\gamma_{m;var;qc}$	1,5	
	$q_{c;z;d}$	5,36	MPa
	$p_{r;z;d}$	37,5	kN/m²
	$F_{r;trek;d;i}$	60,0	kN/m¹
	$F_{trek,d}$	596	kN/m

Bepaling opneembare trekbelasting paal

sondering	diepte		$q_{c;z}$		$P_{r;max;schacht;i}$	$F_{r;trek;d;i}$	$F_{trek,d}$
	m	m	MPa	α t	kPa	kN	kN
	0	-1	0	0,007	0,00	0,00	0
	-1	-2	0	0,007	0,00	0,00	0
	-2	-3	0	0,007	0,00	0,00	0
	-3	-4	0	0,007	0,00	0,00	0
	-4	-5	0	0,007	0,00	0,00	0
	-5	-6	0	0,007	0,00	0,00	0
	-6	-7	0	0,007	0,00	0,00	0
	-7	-8	0	0,007	0,00	0,00	0
	-8	-9	1	0,007	2,50	4,00	4
	-9	-10	3	0,007	7,50	12,00	16
	-10	-11	2	0,007	5,00	8,00	24
	-11	-12	0	0,007	0,00	0,00	24
	-12	-13	3	0,007	7,50	12,00	36
	-13	-14	2	0,007	5,00	8,00	44
	-14	-15	4	0,007	10,00	16,00	60
	-15	-16	10	0,007	25,00	40,00	100
	-16	-17	9	0,007	22,50	36,00	136
	-17	-18	8	0,007	20,00	32,00	168
	-18	-19	12	0,007	30,00	48,00	216
	-19	-20	12	0,007	30,00	48,00	264
	-20	-21	10	0,007	25,00	40,00	304
	-21	-22	11	0,007	27,50	44,00	348
	-22	-23	11	0,007	27,50	44,00	392
	-23	-24	12	0,007	30,00	48,00	440
	-24	-25	12	0,007	30,00	48,00	488
	-25	-26	12	0,007	30,00	48,00	536
	-26	-27	15	0,007	37,50	60,00	596

$F_{trek,d}$	596	kN	paalafmeting	400	mm, paalpuntnivo	-27,00 m

Paalgroep factor	10%	
$F_{trek,d}$	**536,4**	kN

ZWW4S400

DRUKPALEN

FUNDERINGSCONSTRUCTIE
Toelaatbare paalbelastingen

Bijlage CN

Bepaling opneembare paalbelasting op druk

heipaal

		v		
	diameter	a	2	mm
			2	mm
	Deq		0,001808	

maximale puntweerstand

$P_{r;max;punt;i}$		11,25	MN/m²
paalklasse factor	α_p	1,00	
factor paalvoet	β	1	
hoek van inwendige vrijwing van paalvoet	ϕ	40	
factor dwarsdoorsnede paalvoet	s	1,00	
minimale waarde neergaande deel	$q_{c;ll;gem}$	9,00	MN/m²
gem. sondeerwaarde neergaande deel	$q_{c;l;gem}$	14,00	MN/m²
gem. sondeerwaarde opgaande deel	$q_{c;ll;gem}$	11,00	MN/m²

maximale paalschachtwrijving

$P_{r;max;schacht;i}$		0,05	MN/m²

waarin:

paalfactor	α_s	0,010	
conusweerstand over wrijvingstraject	$q_{c;z;a}$	5,00	MN/m²

maximale draagkracht alleenstaande paal

$\mathbf{F_{r;max;i}}$		0,00	MN

waarin:

$\mathbf{F_{r;max;punt;i}}$		0,00	MN
paalpunt oppervlak	A_{punt}	0,00	m²
$\mathbf{F_{r;max;schacht;i}}$		0,00	MN
gemiddelde paalomtrek	$O_{p;gem}$	0,01	m
lengte schachtwrijving	Δl	15,00	m

Bepaling rekenwaarde van de maximale draagkracht

$F_{r;paal;max;d}$	MN	0,00	MN
materiaalfactor grond	$\gamma_{m;b}$	1,20	
waarde afhankelijk van aantal palen en aantal sonderingen	$\xi_{1;N}$	0,75	

$F_{r;paal;max;d}$	3	kN	mm, paalpuntnivo	-27,00	m

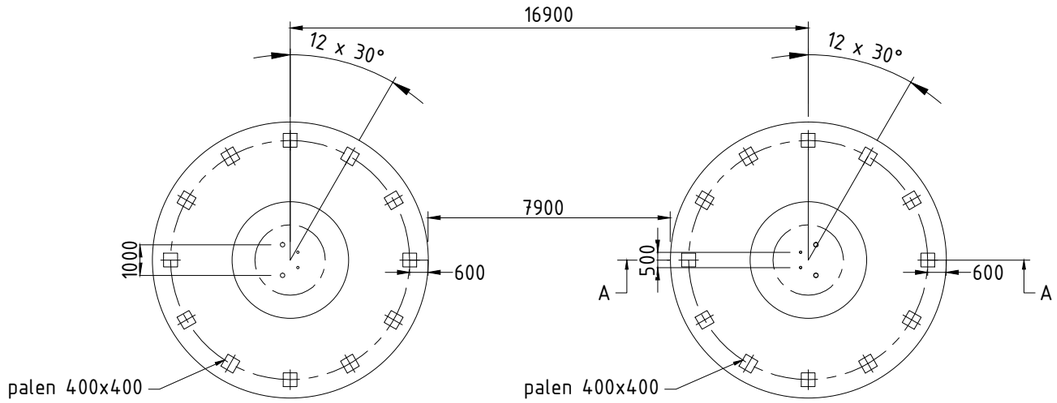

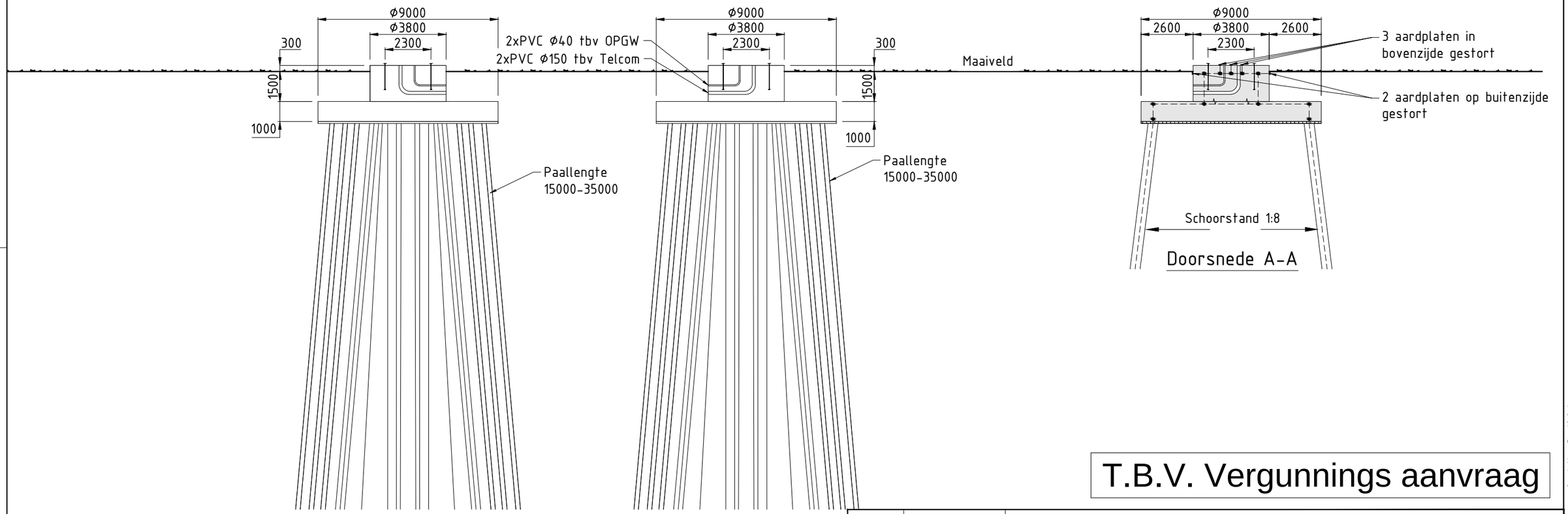

T.B.V. Vergunnings aanvraag

10.0	21-03-2014	Paal - Paal afstand aangepast
9.0	12-03-2014	Diverse aanpassingen
8.0	13-02-2014	Diverse aanpassingen

Verklaring

Gewapend beton
Werkvloer

Verklaring aarding

Ringleiding Ø16mm (FeB220) glad
Koppeling met aardstaaf in paal
Aardplaten

Opmerkingen

Maten in mm
Coordinaten in mm, in het stelsel van de rijksdriehoekmeting
Maatvoering in het 360 graden stelsel
Vellingkanten niet getekend
Ringleiding in bovenkant poer op het bovennet
plaatsen in de eerste laag
Mastvoetanker afmeting exclusief mastvoetflens breedte
Afmetingen indicatief

Projectname:
Engineering verbinding ZW380

Third angle projection:

Drawing no.:
74102194-032-081V

Design state: Definitief		Scale:	1:200
Drawn by: RBE	21-03-2014	Units:	mm
Checked by: AJP	21-03-2014	Project no:	000.145
Approved by: AW	21-03-2014	Company:	TenneT

Description:
Principe ontwerp fundatie steunmast ZWW4S400 masten familie

Revision: 10.0
Format: A3

DNV KEMA Energy & Sustainability, Utrechtseweg 310, 6812 AR Arnhem, tel: +31 26 3 56 91 11, www.dnvkema.com

© 2014 - Filename: 74102194-032-081 - ZWW4S400 Principe ontwerp fundaties Rev10.0.dwg

ZWW4S400

Bijlage BN

Location dependent data to obtain pressures

Wind area			2	
Terrain catagory	O=onbebouwd, B=bebouwd		O	
Hoogte		h	63.3	m
Diameter voet		d voet	2.3	m
top		d top	0.5	m
gem		d gem	1.4	m
wanddikte		t	20	mm
Oppervlakte aan voet		A	143257	mm^2
Traagheidsmoment aan voet		W_x	8.10E+07	mm^3
Weerstandsmoment aan voet		I_x	9.20E+10	mm^4
		2de orde	10.0	%
Mast: Gewicht		$F_{rep;ver}$	426	kN

Ultimate limit state	**hoogte**	**F_{ver}**	**$F_{loodrecht}$**	**$F_{//}$**	$F_{Samengesteld}$		
	m	kN	kN	kN	kN		
GW / opgw	62.6	4.6	15.3	0.0	15.3	957	kNm
150C1F1	52.6	17.1	43.9	0.0	43.9	2307	kNm
150C1F2	42.4	17.1	40.8	0.0	40.8	1729	kNm
150C1F3	32.2	17.1	36.8	0.0	36.8	1186	kNm
380C2F1	52.6	34.1	87.7	0.0	87.7	4613	kNm
380C2F2	42.4	34.1	81.5	0.0	81.5	3458	kNm
380C2F3	32.2	34.1	73.7	0.0	73.7	2373	kNm
RTG	22.1	9.2	20.6	0.0	20.6	454	kNm

Stuwdruk	$F_{hor.}$	25.8	kN
	$M_{d;wind}$	719	kNm
Totaal	$M_{d;tot}$	19900	kNm
Totaal moment incl. 2^{ue} orde effect	$M_{d;tot}$	21889	kNm

Normaalkracht;

Optredende normaalkracht

$N_{d;geleiders}$	167	kN
$N_{d;\ e.g.\ mast}$	511	kN
$N_{s;d;totaal}$	679	kN

Is buis plooigevoelig tgv normaalkracht: conform NEN-EN 50341 par. 7.4.5.4 — JA

ρ_a	0.66	
A_{eff}	94928	mm^2

Optredende spanning tgv normaalkracht

$N_{sd}/A_{eff} = f_{yd}/y_{m1}$ — 7 N/mm^2

Moment;

Optredende moment in de voet:

$M_{d;tot}$ — 21889 kNm

Is buis plooigevoelig tgv momentkracht: conform NEN-EN 50341 par. 7.4.5.4 — JA

ρ_a	0.96	
W_{eff}	7.79E+07	mm^3

Optredende spaning tgv moment:

$M_d/W_{eff} = f_{yd}/y_{m1}$ — 281 N/mm^2

Totale spanning:

σ_d	288	N/mm^2	SPANNING TE GROO < 284 N/mm^2 = ACCOORD
$\sigma_{d;toegestaan}$	284	N/mm^2	==> 80% van 355 N/mm^2

Special limit state	**hoogte**	**F_{ver}**	**$F_{loodrecht}$**	**$F_{//}$**	$F_{Samengesteld}$		
	m	kN	kN	kN	kN		
GW / opgw	62.6	3.9	10.5	0.0	10.5	658	kNm
150C1F1	52.6	14.2	30.4	0.0	30.4	1598	kNm
150C1F2	42.4	14.2	28.3	0.0	28.3	1200	kNm
150C1F3	32.2	14.2	25.7	0.0	25.7	827	kNm
380C2F1	52.6	28.4	60.7	0.0	60.7	3195	kNm
380C2F2	42.4	28.4	56.6	0.0	56.6	2401	kNm
380C2F3	32.2	28.4	51.4	0.0	51.4	1654	kNm
RTG	22.1	7.7	14.3	0.0	14.3	316	kNm

Stuwdruk	$F_{hor.}$	687	kN		
Verplaating		1.56	m	3.44	EIS TENNET VISUEE
Percentage van de verplaatsing		2.46%		5.5%	NEN-EN-50341
Hoek		2.70	graden		
Kromming		0.60%		1%	NEN-EN-50341
Fundatie rotatiestijfheid		0.005	rad		

ZWW4S400

Loadcases for tower strength (ultimate limit state)

		Ahead			Back		
Loadcase according to 50341-3-15	Att. Point	Vertical [N]	Transversal [N]	Longitudinal [N]	Vertical [N]	Transversal [N]	Longitudinal [N]
NL1/1a	GW / opgw	2313	889	20118	2313	889	-20118
Wind, 10°C	150C1F1	8522	3257	73892	8522	3257	-73892
Permanent loads yg= 1.2	150C1F2	8522	3254	73892	8522	3254	-73892
Wind angle: 0°	150C1F3	8522	3251	73892	8522	3251	-73892
	380C2F1	17045	6514	147783	17045	6514	-147783
	380C2F2	17045	6509	147784	17045	6509	-147784
	380C2F3	17045	6503	147784	17045	6503	-147784
	RTG	4620	1769	40192	4620	1769	-40192
NL1/1b	GW / opgw	2312	997	22782	2312	997	-22782
Wind, -20°C	150C1F1	8518	3712	84885	8518	3712	-84885
Permanent loads yg= 1.2	150C1F2	8518	3712	84885	8518	3712	-84885
Wind angle: 0°	150C1F3	8518	3711	84885	8518	3711	-84885
	380C2F1	17036	7425	169770	17036	7425	-169770
	380C2F2	17036	7424	169770	17036	7424	-169770
	380C2F3	17036	7422	169770	17036	7422	-169770
	RTG	4618	1974	45137	4618	1974	-45137
NL1/3	GW / opgw	9331	2691	61372	9331	2691	-61372
Wind, -5°C	150C1F1	14688	5228	119339	14688	5228	-119339
Permanent loads yg= 1.2	150C1F2	14688	5226	119339	14688	5226	-119339
Wind angle: 0°	150C1F3	14688	5225	119339	14688	5225	-119339
	380C2F1	29376	10455	238678	29376	10455	-238678
	380C2F2	29376	10453	238678	29376	10453	-238678
	380C2F3	29376	10449	238678	29376	10449	-238678
	RTG	18688	5380	122900	18688	5380	-122900
NL1/4	GW / opgw	3065	1125	25725	3065	1125	-25725
Construction/maintenance, +5°C	150C1F1	10026	3754	85847	10026	3754	-85847
Permanent loads yg= 1.2	150C1F2	10026	3754	85847	10026	3754	-85847
Wind angle: 0°	150C1F3	10026	3753	85847	10026	3753	-85847
	380C2F1	20053	7509	171694	20053	7509	-171694
	380C2F2	20053	7508	171694	20053	7508	-171694
	380C2F3	20053	7506	171694	20053	7506	-171694
	RTG	6124	2246	51377	6124	2246	-51377
NL1/6	GW / opgw	2603	967	22156	2603	967	-22156
Permanent, +10°C	150C1F1	9589	3546	81221	9589	3546	-81221
Permanent loads yg= 1.35	150C1F2	9589	3546	81221	9589	3546	-81221
	150C1F3	9589	3546	81221	9589	3546	-81221
	380C2F1	19177	7092	162441	19177	7092	-162441
	380C2F2	19177	7092	162441	19177	7092	-162441
	380C2F3	19177	7092	162441	19177	7092	-162441
	RTG	5198	1933	44272	5198	1933	-44272
NL1/1a	GW / opgw	2314	3846	27983	2314	4453	-30414
Wind, 10°C	150C1F1	8525	11377	91937	8525	13050	-98033
Permanent loads yg= 1.2	150C1F2	8524	10695	89566	8525	12228	-94992
Wind angle: 45°	150C1F3	8524	9830	86686	8525	11184	-91258
	380C2F1	17049	22754	183874	17051	26100	-196067
	380C2F2	17049	21389	179132	17050	24455	-189985
	380C2F3	17048	19659	173373	17049	22368	-182517
	RTG	4621	5455	47696	4621	6215	-50363
NL1/1b	GW / opgw	2312	1537	23197	2312	1645	-23372
Wind, -20°C	150C1F1	8518	5215	85739	8518	5512	-86106
Permanent loads yg= 1.2	150C1F2	8518	5093	85607	8518	5366	-85919
Wind angle: 45°	150C1F3	8518	4939	85454	8518	5181	-85701
	380C2F1	17036	10430	171479	17036	11024	-172212
	380C2F2	17036	10187	171214	17036	10732	-171837
	380C2F3	17036	9878	170907	17036	10361	-171402
	RTG	4618	2659	45474	4618	2795	-45620
NL1/3	GW / opgw	9332	5451	63066	9332	5997	-63774
Wind, -5°C	150C1F1	14689	9464	122560	14689	10308	-123899
Permanent loads yg= 1.2	150C1F2	14689	9120	122071	14689	9893	-123216
Wind angle: 45°	150C1F3	14688	8682	121502	14689	9367	-122418
	380C2F1	29377	18929	245119	29378	20617	-247798
	380C2F2	29377	18239	244142	29378	19787	-246432
	380C2F3	29377	17364	243004	29377	18734	-244836
	RTG	18689	8882	124262	18689	9568	-124857
NL1/4	GW / opgw	3066	1660	25999	3066	1765	-26117
Construction/maintenance, +5°C	150C1F1	10026	5249	86504	10026	5543	-86791
Permanent loads yg= 1.2	150C1F2	10026	5129	86401	10026	5399	-86644
Wind angle: 45°	150C1F3	10026	4976	86282	10026	5215	-86474
	380C2F1	20053	10498	173009	20053	11086	-173582
	380C2F2	20053	10258	172802	20053	10797	-173288
	380C2F3	20053	9952	172564	20053	10430	-172949
	RTG	6124	2927	51595	6124	3060	-51693

NL1/1a	GW / opgw	2316	7643	43545	2316	7643	-43545
Wind, 10°C	150C1F1	8530	21926	133184	8530	21926	-133184
Permanent loads yg= 1.2	150C1F2	8529	20387	126978	8529	20387	-126978
Wind angle: 90°	150C1F3	8528	18424	119074	8528	18424	-119074
	380C2F1	17059	43851	266368	17059	43851	-266368
	380C2F2	17058	40774	253956	17058	40774	-253956
	380C2F3	17056	36848	238148	17056	36848	-238148
	RTG	4623	10281	66499	4623	10281	-66499
NL1/1b	GW / opgw	2312	2226	24712	2312	2226	-24712
Wind, -20°C	150C1F1	8518	7103	88986	8518	7103	-88986
Permanent loads yg= 1.2	150C1F2	8518	6824	88380	8518	6824	-88380
Wind angle: 90°	150C1F3	8518	6470	87669	8518	6470	-87669
	380C2F1	17037	14206	177971	17037	14206	-177971
	380C2F2	17037	13647	176759	17037	13647	-176759
	380C2F3	17036	12939	175338	17036	12939	-175338
	RTG	4618	3517	46781	4618	3517	-46781
NL1/3	GW / opgw	9335	8915	69042	9335	8915	-69042
Wind, -5°C	150C1F1	14691	14842	133903	14691	14842	-133903
Permanent loads yg= 1.2	150C1F2	14691	14046	131864	14691	14046	-131864
Wind angle: 90°	150C1F3	14690	13037	129432	14690	13037	-129432
	380C2F1	29382	29685	267807	29382	29685	-267807
	380C2F2	29381	28092	263728	29381	28092	-263728
	380C2F3	29380	26074	258864	29380	26074	-258864
	RTG	18691	13216	129523	18691	13216	-129523
NL1/4	GW / opgw	3066	2328	27047	3066	2328	-27047
Construction/maintenance, +5°C	150C1F1	10027	7109	89071	10027	7109	-89071
Permanent loads yg= 1.2	150C1F2	10027	6834	88588	10027	6834	-88588
Wind angle: 90°	150C1F3	10027	6487	88023	10027	6487	-88023
	380C2F1	20054	14217	178143	20054	14217	-178143
	380C2F2	20053	13669	177175	20053	13669	-177175
	380C2F3	20053	12973	176046	20053	12973	-176046
	RTG	6124	3766	52479	6124	3766	-52479
NL1/1a	GW / opgw	2314	4453	30414	2314	3846	-27983
Wind, 10°C	150C1F1	8525	13050	98033	8525	11377	-91937
Permanent loads yg= 1.2	150C1F2	8525	12228	94992	8524	10695	-89566
Wind angle: -45°	150C1F3	8525	11184	91258	8524	9830	-86686
	380C2F1	17051	26100	196067	17049	22754	-183874
	380C2F2	17050	24455	189985	17049	21389	-179132
	380C2F3	17049	22368	182517	17048	19659	-173373
	RTG	4621	6215	50363	4621	5455	-47696
NL1/1b	GW / opgw	2312	1645	23372	2312	1537	-23197
Wind, -20°C	150C1F1	8518	5512	86106	8518	5215	-85739
Permanent loads yg= 1.2	150C1F2	8518	5366	85919	8518	5093	-85607
Wind angle: -45°	150C1F3	8518	5181	85701	8518	4939	-85454
	380C2F1	17036	11024	172212	17036	10430	-171479
	380C2F2	17036	10732	171837	17036	10187	-171214
	380C2F3	17036	10361	171402	17036	9878	-170907
	RTG	4618	2795	45620	4618	2659	-45474
NL1/3	GW / opgw	9332	5997	63774	9332	5451	-63066
Wind, -5°C	150C1F1	14689	10308	123899	14689	9464	-122560
Permanent loads yg= 1.2	150C1F2	14689	9893	123216	14689	9120	-122071
Wind angle: -45°	150C1F3	14689	9367	122418	14688	8682	-121502
	380C2F1	29378	20617	247798	29377	18929	-245119
	380C2F2	29378	19787	246432	29377	18239	-244142
	380C2F3	29377	18734	244836	29377	17364	-243004
	RTG	18689	9568	124857	18689	8882	-124262
NL1/4	GW / opgw	3066	1765	26117	3066	1660	-25999
Construction/maintenance, +5°C	150C1F1	10026	5543	86791	10026	5249	-86504
Permanent loads yg= 1.2	150C1F2	10026	5399	86644	10026	5129	-86401
Wind angle: -45°	150C1F3	10026	5215	86474	10026	4976	-86282
	380C2F1	20053	11086	173582	20053	10498	-173009
	380C2F2	20053	10797	173288	20053	10258	-172802
	380C2F3	20053	10430	172949	20053	9952	-172564
	RTG	6124	3060	51693	6124	2927	-51595
NL1//1a	GW / opgw	1735	702	15832	1735	702	-15832
Wind, 10°C	150C1F1	6390	2582	58428	6390	2582	-58428
Permanent loads yg= 0.9	150C1F2	6390	2579	58428	6390	2579	-58428
Wind angle: 0°	150C1F3	6390	2576	58428	6390	2576	-58428
	380C2F1	12781	5163	116856	12781	5163	-116856
	380C2F2	12781	5159	116856	12781	5159	-116856
	380C2F3	12781	5152	116856	12781	5152	-116856
	RTG	3464	1394	31612	3464	1394	-31612

NL1/1b	GW / opgw	1734	799	18256	1734	799	-18256
Wind, -20°C	150C1F1	6387	3002	68620	6387	3002	-68620
Permanent loads yg= 0.9	150C1F2	6387	3002	68620	6387	3002	-68620
Wind angle: 0°	150C1F3	6387	3001	68620	6387	3001	-68620
	380C2F1	12774	6004	137240	12774	6004	-137240
	380C2F2	12774	6003	137240	12774	6003	-137240
	380C2F3	12774	6002	137240	12774	6002	-137240
	RTG	3463	1579	36098	3463	1579	-36098
NL1/3	GW / opgw	8751	2569	58574	8751	2569	-58574
Wind, -5°C	150C1F1	12554	4650	106103	12554	4650	-106103
Permanent loads yg= 0.9	150C1F2	12554	4648	106103	12554	4648	-106103
Wind angle: 0°	150C1F3	12554	4647	106103	12554	4647	-106103
	380C2F1	25109	9299	212206	25109	9299	-212206
	380C2F2	25109	9297	212206	25109	9297	-212206
	380C2F3	25109	9293	212206	25109	9293	-212206
	RTG	17529	5136	117298	17529	5136	-117298
NL1/4	GW / opgw	2487	952	21749	2487	952	-21749
Construction/maintenance, +5°C	150C1F1	7894	3107	71017	7894	3107	-71017
Permanent loads yg= 0.9	150C1F2	7894	3106	71017	7894	3106	-71017
Wind angle: 0°	150C1F3	7894	3106	71017	7894	3106	-71017
	380C2F1	15788	6214	142035	15788	6214	-142035
	380C2F2	15788	6213	142035	15788	6213	-142035
	380C2F3	15788	6211	142035	15788	6211	-142035
	RTG	4968	1899	43420	4968	1899	-43420
NL1/6	GW / opgw	1735	691	15832	1735	691	-15832
Permanent, +10°C	150C1F1	6390	2551	58429	6390	2551	-58429
Permanent loads yg= 0.9	150C1F2	6390	2551	58429	6390	2551	-58429
	150C1F3	6390	2551	58429	6390	2551	-58429
	380C2F1	12781	5102	116857	12781	5102	-116857
	380C2F2	12781	5102	116857	12781	5102	-116857
	380C2F3	12781	5102	116857	12781	5102	-116857
	RTG	3464	1380	31612	3464	1380	-31612
NL1/1a	GW / opgw	1735	3745	25694	1736	4367	-28441
Wind, 10°C	150C1F1	6393	10940	81952	6393	12662	-89184
Permanent loads yg= 0.9	150C1F2	6392	10235	79072	6393	11817	-85605
Wind angle: 45°	150C1F3	6392	9341	75512	6393	10741	-81132
	380C2F1	12785	21880	163905	12786	25325	-178368
	380C2F2	12785	20471	158144	12786	23633	-171210
	380C2F3	12784	18682	151023	12785	21482	-162265
	RTG	3465	5186	41561	3465	5973	-44814
NL1/1b	GW / opgw	1734	1348	18863	1734	1459	-19112
Wind, -20°C	150C1F1	6387	4522	69888	6387	4827	-70420
Permanent loads yg= 0.9	150C1F2	6387	4398	69695	6387	4677	-70148
Wind angle: 45°	150C1F3	6387	4241	69470	6387	4487	-69832
	380C2F1	12774	9045	139775	12774	9653	-140839
	380C2F2	12774	8797	139389	12774	9354	-140296
	380C2F3	12774	8482	138940	12774	8975	-139663
	RTG	3463	2272	36598	3463	2410	-36810
NL1/3	GW / opgw	8752	5335	60421	8752	5884	-61187
Wind, -5°C	150C1F1	12555	8918	110064	12555	9774	-111683
Permanent loads yg= 0.9	150C1F2	12555	8569	109470	12555	9353	-110859
Wind angle: 45°	150C1F3	12555	8126	108777	12555	8819	-109892
	380C2F1	25110	17836	220127	25111	19548	-223366
	380C2F2	25110	17138	218940	25110	18706	-221717
	380C2F3	25110	16251	217553	25110	17638	-219783
	RTG	17530	8643	118791	17530	9331	-119438
NL1/4	GW / opgw	2487	1490	22112	2487	1597	-22266
Construction/maintenance, +5°C	150C1F1	7894	4613	71930	7894	4911	-72320
Permanent loads yg= 0.9	150C1F2	7894	4491	71789	7894	4764	-72121
Wind angle: 45°	150C1F3	7894	4336	71626	7894	4578	-71889
	380C2F1	15788	9225	143860	15788	9821	-144641
	380C2F2	15788	8981	143578	15788	9528	-144242
	380C2F3	15788	8672	143251	15788	9156	-143778
	RTG	4968	2583	43713	4968	2717	-43841
NL1/1a	GW / opgw	1737	7598	42499	1737	7598	-42499
Wind, 10°C	150C1F1	6397	21704	128130	6397	21704	-128130
Permanent loads yg= 0.9	150C1F2	6396	20145	121468	6396	20145	-121468
Wind angle: 90°	150C1F3	6395	18152	112882	6395	18152	-112882
	380C2F1	12794	43408	256259	12794	43408	-256259
	380C2F2	12792	40291	242936	12792	40291	-242936
	380C2F3	12791	36305	225764	12791	36305	-225764
	RTG	3467	10133	63126	3467	10133	-63126

NL1/1b	GW / opgw	1734	2061	20947	1734	2061	-20947
Wind, -20°C	150C1F1	6387	6469	74483	6387	6469	-74483
Permanent loads yg= 0.9	150C1F2	6387	6180	73642	6387	6180	-73642
Wind angle: 90°	150C1F3	6387	5813	72647	6387	5813	-72647
	380C2F1	12775	12938	148965	12775	12938	-148965
	380C2F2	12775	12359	147284	12775	12359	-147284
	380C2F3	12775	11626	145294	12775	11626	-145294
	RTG	3463	3153	38459	3463	3153	-38459
NL1/3	GW / opgw	8754	8818	66829	8754	8818	-66829
Wind, -5°C	150C1F1	12557	14386	123475	12557	14386	-123475
Permanent loads yg= 0.9	150C1F2	12557	13575	121109	12557	13575	-121109
Wind angle: 90°	150C1F3	12557	12548	118263	12557	12548	-118263
	380C2F1	25115	28772	246951	25115	28772	-246951
	380C2F2	25114	27151	242218	25114	27151	-242218
	380C2F3	25113	25096	236526	25113	25096	-236526
	RTG	17532	12995	124484	17532	12995	-124484
NL1/4	GW / opgw	2487	2171	23456	2487	2171	-23456
Construction/maintenance, +5°C	150C1F1	7894	6510	75369	7894	6510	-75369
Permanent loads yg= 0.9	150C1F2	7894	6229	74729	7894	6229	-74729
Wind angle: 90°	150C1F3	7894	5873	73978	7894	5873	-73978
	380C2F1	15789	13020	150738	15789	13020	-150738
	380C2F2	15789	12458	149459	15789	12458	-149459
	380C2F3	15788	11746	147956	15788	11746	-147956
	RTG	4968	3433	44864	4968	3433	-44864
NL1/1a	GW / opgw	1736	4367	28441	1735	3745	-25694
Wind, 10°C	150C1F1	6393	12662	89184	6393	10940	-81952
Permanent loads yg= 0.9	150C1F2	6393	11817	85605	6392	10235	-79072
Wind angle: -45°	150C1F3	6393	10741	81132	6392	9341	-75512
	380C2F1	12786	25325	178368	12785	21880	-163905
	380C2F2	12786	23633	171210	12785	20471	-158144
	380C2F3	12785	21482	162265	12784	18682	-151023
	RTG	3465	5973	44814	3465	5186	-41561
NL1/1b	GW / opgw	1734	1459	19112	1734	1348	-18863
Wind, -20°C	150C1F1	6387	4827	70420	6387	4522	-69888
Permanent loads yg= 0.9	150C1F2	6387	4677	70148	6387	4398	-69695
Wind angle: -45°	150C1F3	6387	4487	69832	6387	4241	-69470
	380C2F1	12774	9653	140839	12774	9045	-139775
	380C2F2	12774	9354	140296	12774	8797	-139389
	380C2F3	12774	8975	139663	12774	8482	-138940
	RTG	3463	2410	36810	3463	2272	-36598
NL1/3	GW / opgw	8752	5884	61187	8752	5335	-60421
Wind, -5°C	150C1F1	12555	9774	111683	12555	8918	-110064
Permanent loads yg= 0.9	150C1F2	12555	9353	110859	12555	8569	-109470
Wind angle: -45°	150C1F3	12555	8819	109892	12555	8126	-108777
	380C2F1	25111	19548	223366	25110	17836	-220127
	380C2F2	25110	18706	221717	25110	17138	-218940
	380C2F3	25110	17638	219783	25110	16251	-217553
	RTG	17530	9331	119438	17530	8643	-118791
NL1/4	GW / opgw	2487	1597	22266	2487	1490	-22112
Construction/maintenance, +5°C	150C1F1	7894	4911	72320	7894	4613	-71930
Permanent loads yg= 0.9	150C1F2	7894	4764	72121	7894	4491	-71789
Wind angle: -45°	150C1F3	7894	4578	71889	7894	4336	-71626
	380C2F1	15788	9821	144641	15788	9225	-143860
	380C2F2	15788	9528	144242	15788	8981	-143578
	380C2F3	15788	9156	143779	15788	8672	-143251
	RTG	4968	2717	43841	4968	2583	-43713

ZWW4S400

Loadcases for tower strength (serviceability limit state)

		Ahead			Back		
Loadcase according to 50341-3-15	Att. Point	Vertical [N]	Transversal [N]	Longitudinal [N]	Vertical [N]	Transversal [N]	Longitudinal [N]
NL4/1a	GW / opgw	1928	762	17295	1928	762	-17295
Wind, 10°C	150C1F1	7101	2802	63716	7101	2802	-63716
Permanent loads yg= 1.0	150C1F2	7101	2801	63716	7101	2801	-63716
Wind angle: 0°	150C1F3	7101	2799	63716	7101	2799	-63716
	380C2F1	14202	5605	127432	14202	5605	-127432
	380C2F2	14202	5602	127432	14202	5602	-127432
	380C2F3	14202	5597	127433	14202	5597	-127433
	RTG	3850	1517	34541	3850	1517	-34541
NL4/1b	GW / opgw	1927	866	19809	1927	866	-19809
Wind, -20°C	150C1F1	7097	3244	74210	7097	3244	-74210
Permanent loads yg= 1.0	150C1F2	7097	3244	74210	7097	3244	-74210
Wind angle: 0°	150C1F3	7097	3243	74210	7097	3243	-74210
	380C2F1	14194	6488	148419	14194	6488	-148419
	380C2F2	14194	6488	148419	14194	6488	-148419
	380C2F3	14194	6487	148419	14194	6487	-148419
	RTG	3848	1713	39198	3848	1713	-39198
NL4/3	GW / opgw	6603	2088	47646	6603	2088	-47646
Wind, -5°C	150C1F1	11209	4264	97397	11209	4264	-97397
Permanent loads yg= 1.0	150C1F2	11209	4263	97397	11209	4263	-97397
Wind angle: 0°	150C1F3	11209	4262	97397	11209	4262	-97397
	380C2F1	22419	8528	194794	22419	8528	-194794
	380C2F2	22419	8526	194794	22419	8526	-194794
	380C2F3	22419	8524	194794	22419	8524	-194794
	RTG	13222	4172	95327	13222	4172	-95327
NL4/4	GW / opgw	2429	933	21339	2429	933	-21339
Construction/maintenance, +5°C	150C1F1	8103	3170	72519	8103	3170	-72519
Permanent loads yg= 1.0	150C1F2	8103	3170	72519	8103	3170	-72519
Wind angle: 0°	150C1F3	8103	3170	72519	8103	3170	-72519
	380C2F1	16206	6341	145038	16206	6341	-145038
	380C2F2	16206	6340	145038	16206	6340	-145038
	380C2F3	16206	6339	145038	16206	6339	-145038
	RTG	4852	1862	42594	4852	1862	-42594
NL4/1a	GW / opgw	1928	2713	22074	1928	3116	-23669
Wind, 10°C	150C1F1	7102	8157	74429	7102	9263	-78286
Permanent loads yg= 1.0	150C1F2	7102	7707	72957	7102	8719	-76350
Wind angle: 45°	150C1F3	7102	7137	71192	7102	8030	-74006
	380C2F1	14204	16314	148858	14205	18526	-156572
	380C2F2	14204	15414	145913	14205	17438	-152700
	380C2F3	14204	14275	142383	14204	16059	-148012
	RTG	3850	3947	38920	3850	4448	-40561
NL4/1b	GW / opgw	1927	1225	20042	1927	1296	-20142
Wind, -20°C	150C1F1	7097	4242	74688	7097	4438	-74896
Permanent loads yg= 1.0	150C1F2	7097	4161	74613	7097	4342	-74789
Wind angle: 45°	150C1F3	7097	4059	74527	7097	4219	-74666
	380C2F1	14194	8484	149376	14194	8876	-149792
	380C2F2	14194	8323	149226	14194	8683	-149579
	380C2F3	14194	8118	149053	14194	8438	-149332
	RTG	3848	2169	39385	3848	2258	-39468
NL4/3	GW / opgw	6603	3930	48841	6603	4295	-49341
Wind, -5°C	150C1F1	11210	7083	99443	11210	7644	-100302
Permanent loads yg= 1.0	150C1F2	11210	6854	99131	11210	7368	-99864
Wind angle: 45°	150C1F3	11209	6563	98768	11210	7018	-99352
	380C2F1	22419	14166	198886	22419	15288	-200605
	380C2F2	22419	13708	198261	22419	14736	-199727
	380C2F3	22419	13126	197536	22419	14036	-198705
	RTG	13222	6507	96289	13222	6965	-96707
NL4/4	GW / opgw	2429	1288	21502	2429	1358	-21572
Construction/maintenance, +5°C	150C1F1	8103	4164	72899	8103	4359	-73066
Permanent loads yg= 1.0	150C1F2	8103	4084	72839	8103	4263	-72981
Wind angle: 45°	150C1F3	8103	3983	72769	8103	4142	-72881
	380C2F1	16206	8328	145798	16206	8718	-146133
	380C2F2	16206	8169	145678	16206	8527	-145961
	380C2F3	16206	7966	145539	16206	8283	-145763
	RTG	4852	2315	42722	4852	2403	-42780
NL4/1a	GW / opgw	1929	5258	32797	1929	5258	-32797
Wind, 10°C	150C1F1	7105	15187	101956	7105	15187	-101956
Permanent loads yg= 1.0	150C1F2	7104	14154	97643	7104	14154	-97643
Wind angle: 90°	150C1F3	7104	12840	92220	7104	12840	-92220
	380C2F1	14210	30374	203912	14210	30374	-203912
	380C2F2	14209	28309	195286	14209	28309	-195286
	380C2F3	14208	25679	184440	14208	25679	-184440
	RTG	3851	7149	51129	3851	7149	-51129

NL4/1b	GW / opgw	1927	1678	20920	1927	1678	-20920
Wind, -20°C	150C1F1	7097	5487	76551	7097	5487	-76551
Permanent loads yg= 1.0	150C1F2	7097	5303	76199	7097	5303	-76199
Wind angle: 90°	150C1F3	7097	5070	75789	7097	5070	-75789
	380C2F1	14195	10974	153102	14195	10974	-153102
	380C2F2	14195	10606	152399	14195	10606	-152399
	380C2F3	14195	10140	151579	14195	10140	-151579
	RTG	3848	2735	40128	3848	2735	-40128
NL4/3	GW / opgw	6605	6249	53098	6605	6249	-53098
Wind, -5°C	150C1F1	11211	10660	106834	11211	10660	-106834
Permanent loads yg= 1.0	150C1F2	11211	10129	105487	11211	10129	-105487
Wind angle: 90°	150C1F3	11210	9458	103891	11210	9458	-103891
	380C2F1	22422	21319	213668	22422	21319	-213668
	380C2F2	22421	20259	210974	22421	20259	-210974
	380C2F3	22421	18916	207782	22421	18916	-207782
	RTG	13223	9403	100008	13223	9403	-100008
NL4/4	GW / opgw	2429	1731	22136	2429	1731	-22136
Construction/maintenance, +5°C	150C1F1	8103	5395	74412	8103	5395	-74412
Permanent loads yg= 1.0	150C1F2	8103	5214	74124	8103	5214	-74124
Wind angle: 90°	150C1F3	8103	4984	73791	8103	4984	-73791
	380C2F1	16207	10790	148823	16207	10790	-148823
	380C2F2	16207	10427	148249	16207	10427	-148249
	380C2F3	16207	9967	147581	16207	9967	-147581
	RTG	4852	2871	43252	4852	2871	-43252
NL4/1a	GW / opgw	1928	3116	23669	1928	2713	-22074
Wind, 10°C	150C1F1	7102	9263	78286	7102	8157	-74429
Permanent loads yg= 1.0	150C1F2	7102	8719	76350	7102	7707	-72957
Wind angle: -45°	150C1F3	7102	8030	74006	7102	7137	-71192
	380C2F1	14205	18526	156572	14204	16314	-148858
	380C2F2	14205	17438	152700	14204	15414	-145913
	380C2F3	14204	16059	148012	14204	14275	-142383
	RTG	3850	4448	40561	3850	3947	-38920
NL4/1b	GW / opgw	1927	1296	20142	1927	1225	-20042
Wind, -20°C	150C1F1	7097	4438	74896	7097	4242	-74688
Permanent loads yg= 1.0	150C1F2	7097	4342	74789	7097	4161	-74613
Wind angle: -45°	150C1F3	7097	4219	74666	7097	4059	-74527
	380C2F1	14194	8876	149792	14194	8484	-149376
	380C2F2	14194	8683	149579	14194	8323	-149226
	380C2F3	14194	8438	149332	14194	8118	-149053
	RTG	3848	2258	39468	3848	2169	-39385
NL4/3	GW / opgw	6603	4295	49341	6603	3930	-48841
Wind, -5°C	150C1F1	11210	7644	100302	11210	7083	-99443
Permanent loads yg= 1.0	150C1F2	11210	7368	99864	11210	6854	-99131
Wind angle: -45°	150C1F3	11210	7018	99352	11209	6563	-98768
	380C2F1	22419	15288	200605	22419	14166	-198886
	380C2F2	22419	14736	199727	22419	13708	-198261
	380C2F3	22419	14036	198705	22419	13126	-197536
	RTG	13222	6965	96707	13222	6507	-96289
NL4/4	GW / opgw	2429	1358	21572	2429	1288	-21502
Construction/maintenance, +5°C	150C1F1	8103	4359	73066	8103	4164	-72899
Permanent loads yg= 1.0	150C1F2	8103	4263	72981	8103	4084	-72839
Wind angle: -45°	150C1F3	8103	4142	72881	8103	3983	-72769
	380C2F1	16206	8718	146133	16206	8328	-145798
	380C2F2	16206	8527	145961	16206	8169	-145678
	380C2F3	16206	8283	145763	16206	7966	-145539
	RTG	4852	2403	42780	4852	2315	-42722

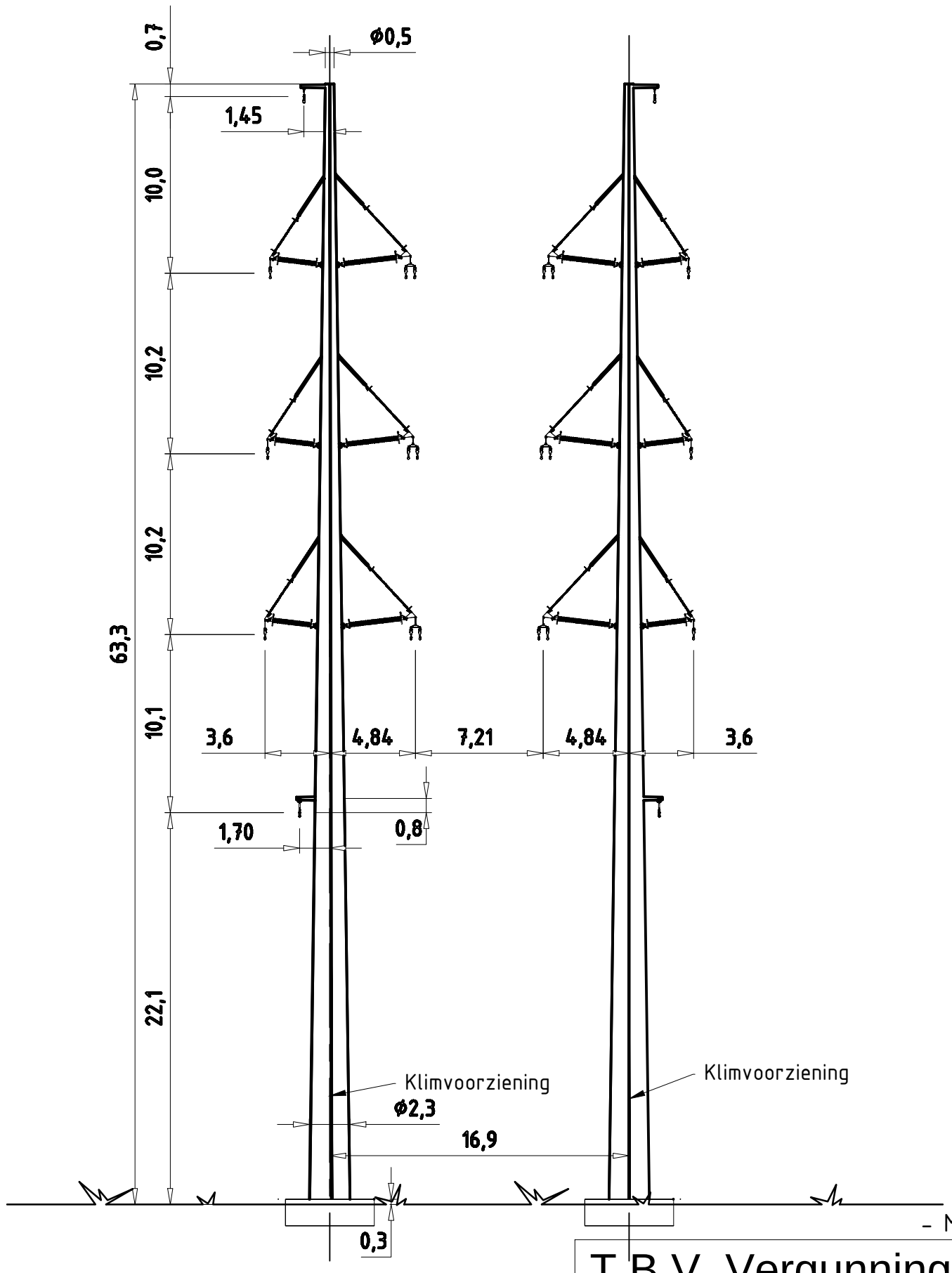

– Maatvoering indicatief

T.B.V. Vergunnings aanvraag

Wintrack
Masttype: ZWW4S400

- Trekparameter 1800m
- 2x380 / 2x150 Steunmast
- 400m Veldlengte
- 175°-180° Lijnhoek
- Uitvoering Staal of Beton
- Kleurstelling hoofdelement:
  Ral 9018 Papyrus white
- Kleurstelling Appendages:
  Ral 7021 Black grey

5.0	03-03-2014	Increased space between poles
4.0	11-02-2014	Modified top/botom diameter and added new braced-V
3.0	11-03-2013	Small modification

KEMA DNV

Projectname: Engineering verbinding ZW380

Third angle projection:

Drawing no.: 74102194-035-081

Design state: Definitief		Scale: 1:300	
Drawn by: BJT	03-03-2014	Units: m	
Checked by: AJP	03-03-2014	Project no: 000.145	
Approved by: AW	03-03-2014	Company: TenneT	

Description: Wintrack Masttype ZWW4S400

Revision: 5.0

Format: A3

DNV KEMA Energy & Sustainability, Utrechtseweg 310, 6812 AR Arnhem, tel: +31 26 3 56 91 11, www.dnvkema.com

© 2012 - Filename: 74102194-035-081 - ZWW4S400 Rev5.0.dwg

ZWW4S400+5

Fundatie berekening

Bijlage CR

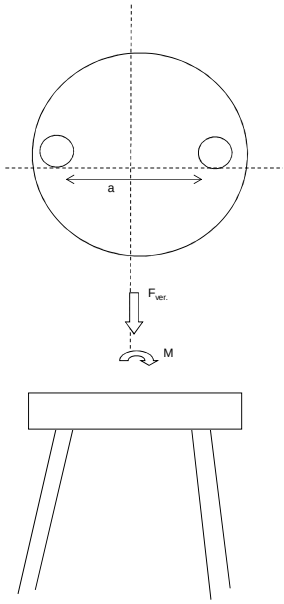

Fundatie ontwerp:
Heipaal

Afmetingen	b	400	mm	
	d	400	mm	
omtrek paal	$O_{p;gem}$	1,6	m	
schoorstand		8	:1	
α		7,125	graden	
Opstort	Diameter	3,9	m	
	Hoogte	1,8	m	
	Inhoud	21,5	m^3	
	e.g.	516	kN	
Onderplaat	Diameter	10,0	m	
	Hoogte	1,0	m	
	Inhoud	79	m^3	
	e.g.	1885	kN	
Hart paal tov rand fund.		0,6	m	

Optreden krachten

e.g. mast	524	kN	
Fgeleiders	175	kN	
Maximale dwarskracht	532	kN	
Fmax vert (druk)	804	kN	
Fmin vert (trek)	603	kN	
Maximale moment	25322	kNm	

Moment

F_{diag}	3070	kN	
F_{hor}	532	kN	
F_{ver}	3047	kN	
M_{hor} (tgv F_{hor})	1489	kNm	
M_{tot}	26811	kNm	reductie door opwaarste kracht water
F=M/a	3047	kN	

Verticaal reactiekracht

Fwater (trek)	1000	kN	
Fgrond (druk)	1798	kN	
Fgrond (trek)	1498	kN	
Fdmax (druk)	2921	kN	
Ftmax (trek)	1456	kN	
Fdtot (druk)	5968	kN	
Fttot (trek)	1591	kN	
Palen druk	6	(-)	
Palen trek	5	(-)	
Totaal palen	12	(-)	Per fundering

ZWW4S400+5

TREKPALEN volgens CUR 2001-4 par. 8.

$$F_{r;trek;d} = \int_0^L O_{p;gem} \times p_{r;z;d} \times dz$$

Bijlage CR

Bepaling opneembare paalbelasting op druk

heipaal

Afmeting paal	b	0,40	m
	b	0,40	m
omtrek paal	$O_{p;gem}$	1,60	m
paalfactor	α t	0,007	
aantal palen	M	1	
aantal sonderingen	N	1	
factor invloed aantal sonderingen	ξ	0,75	
conusweerstand over wrijvingstraject	$q_{c;z;max}$	15	MPa
	$q_{c;z;rep}$	11,25	MPa
materiaalfactor	$\gamma_{m;b4}$	1,4	
factor, wisselende belastingen	$\gamma_{m;var;qc}$	1,5	
	$q_{c;z;d}$	5,36	MPa
	$p_{r;z;d}$	37,5	kN/m^2
	$F_{r;trek;d;i}$	60,0	kN/m^1
	$F_{trek,d}$	596	kN/m

Bepaling opneembare trekbelasting paal

sondering	diepte		$q_{c;z}$		$P_{r;max;schacht;i}$	$F_{r;trek;d;i}$	$F_{trek,d}$
	m	m	MPa	α t	kPa	kN	kN
	0	-1	0	0,007	0,00	0,00	0
	-1	-2	0	0,007	0,00	0,00	0
	-2	-3	0	0,007	0,00	0,00	0
	-3	-4	0	0,007	0,00	0,00	0
	-4	-5	0	0,007	0,00	0,00	0
	-5	-6	0	0,007	0,00	0,00	0
	-6	-7	0	0,007	0,00	0,00	0
	-7	-8	0	0,007	0,00	0,00	0
	-8	-9	1	0,007	2,50	4,00	4
	-9	-10	3	0,007	7,50	12,00	16
	-10	-11	2	0,007	5,00	8,00	24
	-11	-12	0	0,007	0,00	0,00	24
	-12	-13	3	0,007	7,50	12,00	36
	-13	-14	2	0,007	5,00	8,00	44
	-14	-15	4	0,007	10,00	16,00	60
	-15	-16	10	0,007	25,00	40,00	100
	-16	-17	9	0,007	22,50	36,00	136
	-17	-18	8	0,007	20,00	32,00	168
	-18	-19	12	0,007	30,00	48,00	216
	-19	-20	12	0,007	30,00	48,00	264
	-20	-21	10	0,007	25,00	40,00	304
	-21	-22	11	0,007	27,50	44,00	348
	-22	-23	11	0,007	27,50	44,00	392
	-23	-24	12	0,007	30,00	48,00	440
	-24	-25	12	0,007	30,00	48,00	488
	-25	-26	12	0,007	30,00	48,00	536
	-26	-27	15	0,007	37,50	60,00	596

$F_{trek,d}$	596	kN	paalafmeting	400	mm, paalpuntnivo	-27,00 m

Paalgroep factor	10%	
$F_{trek,d}$	**536,4**	kN

ZWW4S400+5

DRUKPALEN

FUNDERINGSCONSTRUCTIE
Toelaatbare paalbelastingen

Bijlage CR

Bepaling opneembare paalbelasting op druk

heipaal

		v		
	diameter	a	2	mm
			2	mm
	Deq		0,001808	

maximale puntweerstand

$P_{r;max;punt;i}$		11,25	MN/m²
paalklasse factor	α_p	1,00	
factor paalvoet	β	1	
hoek van inwendige vrijwing van paalvoet	ϕ	40	
factor dwarsdoorsnede paalvoet	s	1,00	
minimale waarde neergaande deel	$q_{c;ll;gem}$	9,00	MN/m²
gem. sondeerwaarde neergaande deel	$q_{c;l;gem}$	14,00	MN/m²
gem. sondeerwaarde opgaande deel	$q_{c;ll;gem}$	11,00	MN/m²

maximale paalschachtwrijving

$P_{r;max;schacht;i}$		0,05	MN/m²

waarin:

paalfactor	α_s	0,010	
conusweerstand over wrijvingstraject	$q_{c;z;a}$	5,00	MN/m²

maximale draagkracht alleenstaande paal

$\mathbf{F_{r;max;i}}$		0,00	MN

waarin:

$\mathbf{F_{r;max;punt;i}}$		0,00	MN
paalpunt oppervlak	A_{punt}	0,00	m²
$\mathbf{F_{r;max;schacht;i}}$		0,00	MN
gemiddelde paalomtrek	$O_{p;gem}$	0,01	m
lengte schachtwrijving	Δl	15,00	m

Bepaling rekenwaarde van de maximale draagkracht

$F_{r;paal;max;d}$	MN	0,00	MN
materiaalfactor grond	$\gamma_{m;b}$	1,20	
waarde afhankelijk van aantal palen en aantal sonderingen	$\xi_{1;N}$	0,75	

$F_{r;paal;max;d}$	3	kN	mm, paalpuntnivo	-27,00	m

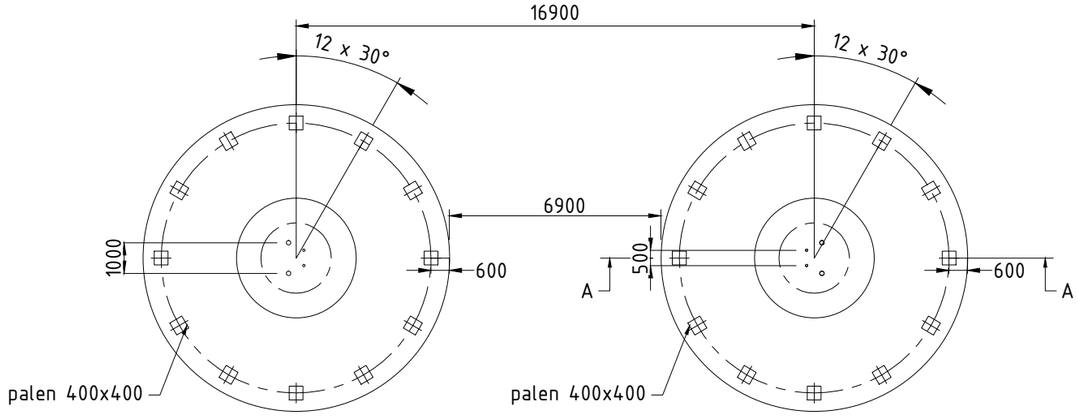

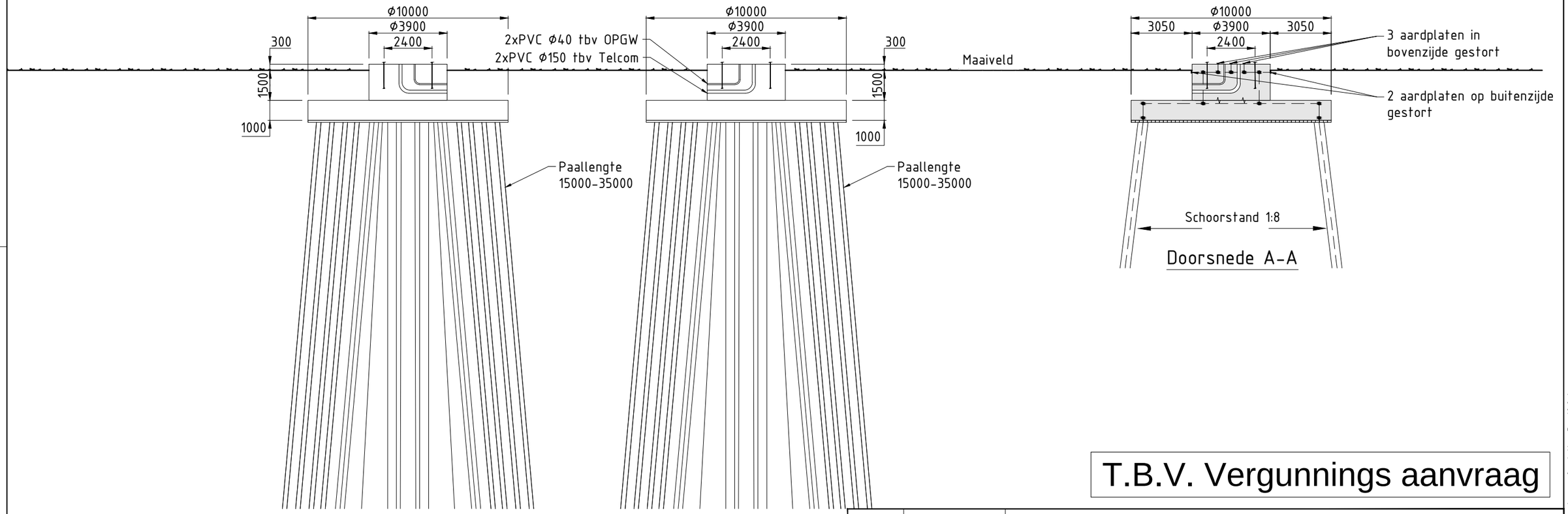

T.B.V. Vergunnings aanvraag

10.0	21-03-2014	Paal-Paal afstand aangepast
9.0	14-03-2014	Diverse aanpassingen
8.0	13-02-2014	Opstort afmeting gewijzigd

Verklaring

Gewapend beton

Werkvloer

Verklaring aarding

Ringleiding ϕ16mm (FeB220) glad

Koppeling met aardstaaf in paal

Aardplaten

Opmerkingen

Maten in mm
Coordinaten in mm, in het stelsel van de rijksdriehoekmeting
Maatvoering in het 360 graden stelsel
Vellingkanten niet getekend
Ringleiding in bovenkant poer op het bovennet
plaatsen in de eerste laag
Mastvoetanker afmeting exclusief mastvoetflens breedte
Afmetingen indicatief

KEMA DNV

Projectname:
Engineering verbnindingen ZW380

Third angle projection:

Drawing no.:
74102194-032-082V

Design state: Definitief		Scale:	1:200
Drawn by: RBE	21-03-2014	Units:	mm
Checked by: AJP	21-03-2014	Project no:	000.145
Approved by: AW	21-03-2014	Company:	TenneT

Description:
Principe ontwerp fundatie steunmast ZWW4S400+5 masten familie

Revision: 10.0

Format: A3

DNV KEMA Energy & Sustainability, Utrechtseweg 310, 6812 AR Arnhem, tel: +31 26 3 56 91 11, www.dnvkema.com

© 2014 - Filename: 74102194-032-082 - ZWW4S400+5 Principe ontwerp fundaties Rev10.0.dwg

ZWW4S400+5

Bijlage BR

Location dependent data to obtain pressures

Wind area			2	
Terrain catagory	O=onbebouwd, B=bebouwd		O	
Hoogte		h	68.3	m
Diameter voet		d voet	2.4	m
top		d top	0.5	m
gem		d gem	1.5	m
wanddikte		t	22	mm
Oppervlakte aan voet		A	164356	mm^2
Traagheidsmoment aan voet		W_x	9.68E+07	mm^3
Weerstandsmoment aan voet		I_x	1.15E+11	mm^4
		2de orde	10.0	%
Mast: Gewicht		$F_{rep;ver}$	524	kN

Ultimate limit state	**hoogte**	**F_{ver}**	**$F_{loodrecht}$**	**$F_{//}$**	$F_{Samengesteld}$		
	m	kN	kN	kN	kN		
GW / opgw	67.6	4.8	15.5	0.0	15.5	1046	kNm
150C1F1	57.6	17.8	44.5	0.0	44.5	2564	kNm
150C1F2	47.4	17.8	41.6	0.0	41.6	1971	kNm
150C1F3	37.2	17.9	37.9	0.0	37.9	1409	kNm
380C2F1	57.6	35.6	89.0	0.0	89.0	5128	kNm
380C2F2	47.4	35.7	83.2	0.0	83.2	3942	kNm
380C2F3	37.2	35.8	75.8	0.0	75.8	2819	kNm
RTG	27.1	9.7	21.6	0.0	21.6	586	kNm

Stuwdruk	$F_{hor.}$	29.3	kN
	$M_{d;wind}$	882	kNm
Totaal	$M_{d;tot}$	23020	kNm
Totaal moment incl. 2^{ue} orde effect	$M_{d;tot}$	25322	kNm

Normaalkracht;

Optredende normaalkracht

$N_{d;geleiders}$	175	kN
$N_{d;\ e.g.\ mast}$	628	kN
$N_{s;d;totaal}$	804	kN

Is buis plooigevoelig tgv normaalkracht: conform NEN-EN 50341 par. 7.4.5.4

	JA	
ρ_a	0.68	
A_{eff}	112138	mm^2

Optredende spanning tgv normaalkracht

$N_{sd}/A_{eff} = f_{yd}/y_{m1}$ 7 N/mm^2

Moment;

Optredende moment in de voet:

$M_{d;tot}$ 25322 kNm

Is buis plooigevoelig tgv momentkracht: conform NEN-EN 50341 par. 7.4.5.4

	JA	
ρ_a	0.98	
W_{eff}	9.51E+07	mm^3

Optredende spaning tgv moment:

$M_d/W_{eff} = f_{yd}/y_{m1}$ 266 N/mm^2

Totale spanning:

σ_d	273	N/mm^2	< 284 N/mm^2 = ACCOORD
$\sigma_{d;toegestaan}$	284	N/mm^2	==> 80% van 355 N/mm^2

Special limit state	**hoogte**	**F_{ver}**	**$F_{loodrecht}$**	**$F_{//}$**	$F_{Samengesteld}$		
	m	kN	kN	kN	kN		
GW / opgw	67.6	4.0	10.6	0.0	10.6	720	kNm
150C1F1	57.6	15.0	30.8	0.0	30.8	1775	kNm
150C1F2	47.4	15.0	28.8	0.0	28.8	1367	kNm
150C1F3	37.2	15.1	26.4	0.0	26.4	981	kNm
380C2F1	57.6	30.0	61.6	0.0	61.6	3550	kNm
380C2F2	47.4	30.1	57.7	0.0	57.7	2735	kNm
380C2F3	37.2	30.2	52.8	0.0	52.8	1962	kNm
RTG	27.1	8.2	15.0	0.0	15.0	407	kNm

Stuwdruk	$F_{hor.}$	782	kN		
Verplaating		1.73	m	3.72	EIS TENNET VISUEE
Percentage van de verplaatsing		2.54%		5.5%	NEN-EN-50341
Hoek		2.84	graden		
Kromming		0.64%		1%	NEN-EN-50341
Fundatie rotatiestijfheid		0.005	rad		

ZWW4S400+5

Loadcases for tower strength (ultimate limit state)

		Ahead			Back		
Loadcase according to 50341-3-15	Att. Point	Vertical [N]	Transversal [N]	Longitudinal [N]	Vertical [N]	Transversal [N]	Longitudinal [N]
NL1/1a	GW / opgw	2566	889	20118	2566	889	-20118
Wind, 10°C	150C1F1	9452	3257	73892	9452	3257	-73892
Permanent loads yg= 1.2	150C1F2	9452	3255	73892	9452	3255	-73892
Wind angle: 0°	150C1F3	9452	3252	73892	9452	3252	-73892
	380C2F1	18903	6515	147783	18903	6515	-147783
	380C2F2	18903	6510	147783	18903	6510	-147783
	380C2F3	18903	6504	147783	18903	6504	-147783
	RTG	5125	1770	40192	5125	1770	-40192
NL1/1b	GW / opgw	2598	997	22782	2598	997	-22782
Wind, -20°C	150C1F1	9584	3712	84885	9584	3712	-84885
Permanent loads yg= 1.2	150C1F2	9584	3712	84885	9584	3712	-84885
Wind angle: 0°	150C1F3	9584	3711	84885	9584	3711	-84885
	380C2F1	19168	7425	169771	19168	7425	-169771
	380C2F2	19168	7424	169771	19168	7424	-169771
	380C2F3	19168	7423	169771	19168	7423	-169771
	RTG	5185	1974	45137	5185	1974	-45137
NL1/3	GW / opgw	10106	2691	61371	10106	2691	-61371
Wind, -5°C	150C1F1	16190	5228	119339	16190	5228	-119339
Permanent loads yg= 1.2	150C1F2	16190	5227	119339	16190	5227	-119339
Wind angle: 0°	150C1F3	16190	5225	119339	16190	5225	-119339
	380C2F1	32379	10456	238677	32379	10456	-238677
	380C2F2	32379	10453	238677	32379	10453	-238677
	380C2F3	32379	10450	238677	32379	10450	-238677
	RTG	20239	5381	122899	20239	5381	-122899
NL1/4	GW / opgw	3389	1125	25725	3389	1125	-25725
Construction/maintenance, +5°C	150C1F1	11106	3754	85847	11106	3754	-85847
Permanent loads yg= 1.2	150C1F2	11106	3754	85847	11106	3754	-85847
Wind angle: 0°	150C1F3	11106	3753	85847	11106	3753	-85847
	380C2F1	22212	7509	171693	22212	7509	-171693
	380C2F2	22212	7508	171693	22212	7508	-171693
	380C2F3	22212	7507	171693	22212	7507	-171693
	RTG	6771	2246	51377	6771	2246	-51377
NL1/6	GW / opgw	2881	967	22156	2881	967	-22156
Permanent, +10°C	150C1F1	10610	3546	81220	10610	3546	-81220
Permanent loads yg= 1.35	150C1F2	10610	3546	81220	10610	3546	-81220
	150C1F3	10610	3546	81220	10610	3546	-81220
	380C2F1	21221	7092	162441	21221	7092	-162441
	380C2F2	21221	7092	162441	21221	7092	-162441
	380C2F3	21221	7092	162441	21221	7092	-162441
	RTG	5755	1933	44272	5755	1933	-44272
NL1/1a	GW / opgw	2468	3889	28154	2450	4505	-30625
Wind, 10°C	150C1F1	9184	11525	92459	9122	13228	-98699
Permanent loads yg= 1.2	150C1F2	9210	10873	90177	9150	12442	-95778
Wind angle: 45°	150C1F3	9243	10058	87432	9187	11460	-92229
	380C2F1	18369	23049	184918	18243	26455	-197399
	380C2F2	18420	21745	180353	18300	24884	-191557
	380C2F3	18486	20116	174863	18374	22920	-184459
	RTG	5004	5687	48489	4973	6496	-51392
NL1/1b	GW / opgw	2590	1545	23209	2586	1654	-23388
Wind, -20°C	150C1F1	9564	5241	85770	9556	5543	-86149
Permanent loads yg= 1.2	150C1F2	9567	5125	85641	9560	5404	-85967
Wind angle: 45°	150C1F3	9570	4980	85493	9564	5230	-85757
	380C2F1	19128	10482	171540	19112	11087	-172298
	380C2F2	19134	10250	171282	19120	10808	-171933
	380C2F3	19140	9960	170986	19129	10459	-171513
	RTG	5177	2701	45516	5174	2844	-45680
NL1/3	GW / opgw	10067	5490	63112	10053	6044	-63838
Wind, -5°C	150C1F1	16119	9539	122669	16092	10398	-124052
Permanent loads yg= 1.2	150C1F2	16129	9210	122195	16105	10002	-123389
Wind angle: 45°	150C1F3	16140	8798	121646	16120	9506	-122621
	380C2F1	32238	19077	245338	32184	20796	-248105
	380C2F2	32257	18419	244389	32210	20003	-246779
	380C2F3	32279	17595	243293	32240	19012	-245241
	RTG	20203	9092	124433	20189	9820	-125098
NL1/4	GW / opgw	3383	1667	26006	3381	1774	-26128
Construction/maintenance, +5°C	150C1F1	11092	5275	86528	11086	5574	-86824
Permanent loads yg= 1.2	150C1F2	11094	5160	86427	11089	5436	-86681
Wind angle: 45°	150C1F3	11096	5016	86312	11092	5264	-86517
	380C2F1	22184	10550	173055	22172	11148	-173648
	380C2F2	22188	10321	172854	22178	10873	-173363
	380C2F3	22192	10033	172624	22184	10527	-173035
	RTG	6765	2968	51623	6763	3109	-51733

NL1/1a	GW / opgw	2392	7739	43932	2392	7739	-43932
Wind, 10°C	150C1F1	8894	22257	134519	8894	22257	-134519
Permanent loads yg= 1.2	150C1F2	8921	20790	128600	8921	20790	-128600
Wind angle: 90°	150C1F3	8959	18944	121163	8959	18944	-121163
	380C2F1	17788	44514	269039	17788	44514	-269039
	380C2F2	17842	41579	257201	17842	41579	-257201
	380C2F3	17919	37888	242327	17919	37888	-242327
	RTG	4849	10809	68688	4849	10809	-68688
NL1/1b	GW / opgw	2561	2243	24762	2561	2243	-24762
Wind, -20°C	150C1F1	9496	7164	89122	9496	7164	-89122
Permanent loads yg= 1.2	150C1F2	9507	6897	88534	9507	6897	-88534
Wind angle: 90°	150C1F3	9521	6563	87851	9521	6563	-87851
	380C2F1	18992	14327	178244	18992	14327	-178244
	380C2F2	19015	13793	177069	19015	13793	-177069
	380C2F3	19042	13126	175702	19042	13126	-175702
	RTG	5149	3611	46977	5149	3611	-46977
NL1/3	GW / opgw	9957	9004	69233	9957	9004	-69233
Wind, -5°C	150C1F1	15914	15015	134356	15914	15015	-134356
Permanent loads yg= 1.2	150C1F2	15945	14254	132386	15945	14254	-132386
Wind angle: 90°	150C1F3	15984	13303	130056	15984	13303	-130056
	380C2F1	31829	30029	268712	31829	30029	-268712
	380C2F2	31891	28508	264772	31891	28508	-264772
	380C2F3	31968	26607	260112	31968	26607	-260112
	RTG	20086	13693	130296	20086	13693	-130296
NL1/4	GW / opgw	3364	2346	27082	3364	2346	-27082
Construction/maintenance, +5°C	150C1F1	11042	7168	89180	11042	7168	-89180
Permanent loads yg= 1.2	150C1F2	11051	6906	88711	11051	6906	-88711
Wind angle: 90°	150C1F3	11061	6579	88167	11061	6579	-88167
	380C2F1	22085	14336	178360	22085	14336	-178360
	380C2F2	22102	13812	177421	22102	13812	-177421
	380C2F3	22121	13157	176333	22121	13157	-176333
	RTG	6747	3859	52613	6747	3859	-52613
NL1/1a	GW / opgw	2450	4505	30625	2468	3889	-28154
Wind, 10°C	150C1F1	9122	13228	98699	9184	11525	-92459
Permanent loads yg= 1.2	150C1F2	9150	12442	95778	9210	10873	-90177
Wind angle: -45°	150C1F3	9187	11460	92229	9243	10058	-87432
	380C2F1	18243	26455	197399	18369	23049	-184918
	380C2F2	18300	24884	191557	18420	21745	-180353
	380C2F3	18374	22920	184459	18486	20116	-174863
	RTG	4973	6496	51392	5004	5687	-48489
NL1/1b	GW / opgw	2586	1654	23388	2590	1545	-23209
Wind, -20°C	150C1F1	9556	5543	86149	9564	5241	-85770
Permanent loads yg= 1.2	150C1F2	9560	5404	85967	9567	5125	-85641
Wind angle: -45°	150C1F3	9564	5230	85757	9570	4980	-85493
	380C2F1	19112	11087	172298	19128	10482	-171540
	380C2F2	19120	10808	171933	19134	10250	-171282
	380C2F3	19129	10459	171513	19140	9960	-170986
	RTG	5174	2844	45680	5177	2701	-45516
NL1/3	GW / opgw	10053	6044	63838	10067	5490	-63112
Wind, -5°C	150C1F1	16092	10398	124052	16119	9539	-122669
Permanent loads yg= 1.2	150C1F2	16105	10002	123389	16129	9210	-122195
Wind angle: -45°	150C1F3	16120	9506	122621	16140	8798	-121646
	380C2F1	32184	20796	248105	32238	19077	-245338
	380C2F2	32210	20003	246779	32257	18419	-244389
	380C2F3	32240	19012	245241	32279	17595	-243293
	RTG	20189	9820	125098	20203	9092	-124433
NL1/4	GW / opgw	3381	1774	26128	3383	1667	-26006
Construction/maintenance, +5°C	150C1F1	11086	5574	86824	11092	5275	-86528
Permanent loads yg= 1.2	150C1F2	11089	5436	86681	11094	5160	-86427
Wind angle: -45°	150C1F3	11092	5264	86517	11096	5016	-86312
	380C2F1	22172	11148	173648	22184	10550	-173055
	380C2F2	22178	10873	173363	22188	10321	-172854
	380C2F3	22184	10527	173035	22192	10033	-172624
	RTG	6763	3109	51733	6765	2968	-51623
NL1//1a	GW / opgw	1934	702	15832	1934	702	-15832
Wind, 10°C	150C1F1	7125	2582	58428	7125	2582	-58428
Permanent loads yg= 0.9	150C1F2	7125	2580	58428	7125	2580	-58428
Wind angle: 0°	150C1F3	7125	2577	58428	7125	2577	-58428
	380C2F1	14250	5164	116856	14250	5164	-116856
	380C2F2	14250	5160	116856	14250	5160	-116856
	380C2F3	14250	5154	116856	14250	5154	-116856
	RTG	3862	1395	31612	3862	1395	-31612

NL1/1b	GW / opgw	1963	799	18256	1963	799	-18256
Wind, -20°C	150C1F1	7248	3002	68621	7248	3002	-68621
Permanent loads yg= 0.9	150C1F2	7248	3002	68621	7248	3002	-68621
Wind angle: 0°	150C1F3	7248	3001	68621	7248	3001	-68621
	380C2F1	14497	6005	137241	14497	6005	-137241
	380C2F2	14497	6004	137241	14497	6004	-137241
	380C2F3	14497	6002	137241	14497	6002	-137241
	RTG	3916	1579	36098	3916	1579	-36098
NL1/3	GW / opgw	9490	2569	58574	9490	2569	-58574
Wind, -5°C	150C1F1	13889	4650	106103	13889	4650	-106103
Permanent loads yg= 0.9	150C1F2	13889	4649	106103	13889	4649	-106103
Wind angle: 0°	150C1F3	13889	4647	106103	13889	4647	-106103
	380C2F1	27778	9300	212205	27778	9300	-212205
	380C2F2	27778	9297	212205	27778	9297	-212205
	380C2F3	27778	9294	212206	27778	9294	-212206
	RTG	19009	5137	117297	19009	5137	-117297
NL1/4	GW / opgw	2760	952	21749	2760	952	-21749
Construction/maintenance, +5°C	150C1F1	8787	3107	71017	8787	3107	-71017
Permanent loads yg= 0.9	150C1F2	8787	3106	71017	8787	3106	-71017
Wind angle: 0°	150C1F3	8787	3106	71017	8787	3106	-71017
	380C2F1	17573	6214	142035	17573	6214	-142035
	380C2F2	17573	6213	142035	17573	6213	-142035
	380C2F3	17573	6212	142035	17573	6212	-142035
	RTG	5514	1899	43420	5514	1899	-43420
NL1/6	GW / opgw	1934	691	15832	1934	691	-15832
Permanent, +10°C	150C1F1	7125	2551	58429	7125	2551	-58429
Permanent loads yg= 0.9	150C1F2	7125	2551	58429	7125	2551	-58429
	150C1F3	7125	2551	58429	7125	2551	-58429
	380C2F1	14250	5102	116857	14250	5102	-116857
	380C2F2	14250	5102	116857	14250	5102	-116857
	380C2F3	14250	5102	116857	14250	5102	-116857
	RTG	3862	1380	31612	3862	1380	-31612
NL1/1a	GW / opgw	1833	3790	25889	1820	4420	-28676
Wind, 10°C	150C1F1	6833	11092	82581	6780	12845	-89961
Permanent loads yg= 0.9	150C1F2	6856	10419	79818	6803	12038	-86535
Wind angle: 45°	150C1F3	6887	9577	76440	6835	11025	-82305
	380C2F1	13666	22184	165162	13560	25690	-179922
	380C2F2	13712	20839	159636	13607	24075	-173071
	380C2F3	13773	19154	152881	13671	22051	-164610
	RTG	3726	5427	42539	3698	6262	-46045
NL1/1b	GW / opgw	1951	1356	18879	1946	1468	-19135
Wind, -20°C	150C1F1	7220	4549	69932	7209	4859	-70481
Permanent loads yg= 0.9	150C1F2	7224	4431	69744	7214	4716	-70218
Wind angle: 45°	150C1F3	7229	4283	69528	7221	4538	-69913
	380C2F1	14441	9099	139864	14418	9718	-140963
	380C2F2	14448	8862	139488	14429	9432	-140435
	380C2F3	14457	8565	139056	14441	9075	-139825
	RTG	3905	2314	36659	3900	2461	-36896
NL1/3	GW / opgw	9448	5374	60472	9433	5931	-61257
Wind, -5°C	150C1F1	13805	8993	110197	13774	9865	-111868
Permanent loads yg= 0.9	150C1F2	13816	8660	109621	13789	9463	-111068
Wind angle: 45°	150C1F3	13829	8243	108953	13806	8960	-110138
	380C2F1	27611	17987	220394	27548	19730	-223736
	380C2F2	27633	17320	219241	27578	18926	-222137
	380C2F3	27659	16486	217906	27613	17921	-220276
	RTG	18970	8854	118977	18955	9584	-119701
NL1/4	GW / opgw	2753	1498	22122	2750	1606	-22280
Construction/maintenance, +5°C	150C1F1	8768	4639	71962	8761	4942	-72365
Permanent loads yg= 0.9	150C1F2	8771	4523	71825	8764	4802	-72171
Wind angle: 45°	150C1F3	8774	4377	71667	8768	4627	-71948
	380C2F1	17536	9278	143924	17521	9885	-144731
	380C2F2	17541	9045	143650	17529	9605	-144343
	380C2F3	17547	8754	143334	17537	9255	-143896
	RTG	5508	2624	43750	5505	2767	-43893
NL1/1a	GW / opgw	1782	7694	42903	1782	7694	-42903
Wind, 10°C	150C1F1	6615	22039	129555	6615	22039	-129555
Permanent loads yg= 0.9	150C1F2	6632	20553	123215	6632	20553	-123215
Wind angle: 90°	150C1F3	6659	18681	115164	6659	18681	-115164
	380C2F1	13229	44078	259111	13229	44078	-259111
	380C2F2	13265	41106	246431	13265	41106	-246431
	380C2F3	13317	37362	230329	13317	37362	-230329
	RTG	3604	10670	65501	3604	10670	-65501

NL1/1b	GW / opgw	1917	2080	21014	1917	2080	-21014
Wind, -20°C	150C1F1	7132	6532	74671	7132	6532	-74671
Permanent loads yg= 0.9	150C1F2	7146	6255	73857	7146	6255	-73857
Wind angle: 90°	150C1F3	7163	5910	72902	7163	5910	-72902
	380C2F1	14264	13064	149342	14264	13064	-149342
	380C2F2	14292	12510	147714	14292	12510	-147714
	380C2F3	14326	11820	145805	14326	11820	-145805
	RTG	3868	3251	38731	3868	3251	-38731
NL1/3	GW / opgw	9334	8907	67032	9334	8907	-67032
Wind, -5°C	150C1F1	13581	14561	123999	13581	14561	-123999
Permanent loads yg= 0.9	150C1F2	13614	13787	121716	13614	13787	-121716
Wind angle: 90°	150C1F3	13655	12819	118996	13655	12819	-118996
	380C2F1	27163	29122	247998	27163	29122	-247998
	380C2F2	27227	27574	243432	27227	27574	-243432
	380C2F3	27309	25639	237993	27309	25639	-237993
	RTG	18846	13474	125317	18846	13474	-125317
NL1/4	GW / opgw	2730	2189	23501	2730	2189	-23501
Construction/maintenance, +5°C	150C1F1	8706	6571	75513	8706	6571	-75513
Permanent loads yg= 0.9	150C1F2	8717	6302	74892	8717	6302	-74892
Wind angle: 90°	150C1F3	8729	5967	74170	8729	5967	-74170
	380C2F1	17413	13141	151025	17413	13141	-151025
	380C2F2	17433	12604	149785	17433	12604	-149785
	380C2F3	17458	11934	148340	17458	11934	-148340
	RTG	5485	3527	45037	5485	3527	-45037
NL1/1a	GW / opgw	1820	4420	28676	1833	3790	-25889
Wind, 10°C	150C1F1	6780	12845	89961	6833	11092	-82581
Permanent loads yg= 0.9	150C1F2	6803	12038	86535	6856	10419	-79818
Wind angle: -45°	150C1F3	6835	11025	82305	6887	9577	-76440
	380C2F1	13560	25690	179922	13666	22184	-165162
	380C2F2	13607	24075	173071	13712	20839	-159636
	380C2F3	13671	22051	164610	13773	19154	-152881
	RTG	3698	6262	46045	3726	5427	-42539
NL1/1b	GW / opgw	1946	1468	19135	1951	1356	-18879
Wind, -20°C	150C1F1	7209	4859	70481	7220	4549	-69932
Permanent loads yg= 0.9	150C1F2	7214	4716	70218	7224	4431	-69744
Wind angle: -45°	150C1F3	7221	4538	69913	7229	4283	-69528
	380C2F1	14418	9718	140963	14441	9099	-139864
	380C2F2	14429	9432	140435	14448	8862	-139488
	380C2F3	14441	9075	139825	14457	8565	-139056
	RTG	3900	2461	36896	3905	2314	-36659
NL1/3	GW / opgw	9433	5931	61257	9448	5374	-60472
Wind, -5°C	150C1F1	13774	9865	111868	13805	8993	-110197
Permanent loads yg= 0.9	150C1F2	13789	9463	111068	13816	8660	-109621
Wind angle: -45°	150C1F3	13806	8960	110138	13829	8243	-108953
	380C2F1	27548	19730	223736	27611	17987	-220394
	380C2F2	27578	18926	222137	27633	17320	-219241
	380C2F3	27613	17921	220276	27659	16486	-217906
	RTG	18955	9584	119701	18970	8854	-118977
NL1/4	GW / opgw	2750	1606	22280	2753	1498	-22122
Construction/maintenance, +5°C	150C1F1	8761	4942	72365	8768	4639	-71962
Permanent loads yg= 0.9	150C1F2	8764	4802	72171	8771	4523	-71825
Wind angle: -45°	150C1F3	8768	4627	71948	8774	4377	-71667
	380C2F1	17521	9885	144731	17536	9278	-143924
	380C2F2	17529	9605	144343	17541	9045	-143650
	380C2F3	17537	9255	143896	17547	8754	-143334
	RTG	5505	2767	43893	5508	2624	-43750

ZWW4S400+5

Loadcases for tower strength (serviceability limit state)

		Ahead			Back		
Loadcase according to 50341-3-15	Att. Point	Vertical [N]	Transversal [N]	Longitudinal [N]	Vertical [N]	Transversal [N]	Longitudinal [N]
NL4/1a	GW / opgw	2145	763	17295	2145	763	-17295
Wind, 10°C	150C1F1	7902	2803	63716	7902	2803	-63716
Permanent loads yg= 1.0	150C1F2	7902	2801	63716	7902	2801	-63716
Wind angle: 0°	150C1F3	7902	2799	63716	7902	2799	-63716
	380C2F1	15804	5605	127432	15804	5605	-127432
	380C2F2	15804	5602	127432	15804	5602	-127432
	380C2F3	15804	5598	127433	15804	5598	-127433
	RTG	4284	1518	34541	4284	1518	-34541
NL4/1b	GW / opgw	2175	866	19809	2175	866	-19809
Wind, -20°C	150C1F1	8029	3244	74210	8029	3244	-74210
Permanent loads yg= 1.0	150C1F2	8029	3244	74210	8029	3244	-74210
Wind angle: 0°	150C1F3	8029	3244	74210	8029	3244	-74210
	380C2F1	16058	6488	148420	16058	6488	-148420
	380C2F2	16058	6488	148420	16058	6488	-148420
	380C2F3	16058	6487	148420	16058	6487	-148420
	RTG	4340	1713	39198	4340	1713	-39198
NL4/3	GW / opgw	7203	2088	47645	7203	2088	-47645
Wind, -5°C	150C1F1	12434	4264	97397	12434	4264	-97397
Permanent loads yg= 1.0	150C1F2	12434	4263	97397	12434	4263	-97397
Wind angle: 0°	150C1F3	12434	4262	97397	12434	4262	-97397
	380C2F1	24868	8528	194794	24868	8528	-194794
	380C2F2	24868	8526	194794	24868	8526	-194794
	380C2F3	24868	8524	194794	24868	8524	-194794
	RTG	14423	4172	95326	14423	4172	-95326
NL4/4	GW / opgw	2697	933	21339	2697	933	-21339
Construction/maintenance, +5°C	150C1F1	9015	3170	72519	9015	3170	-72519
Permanent loads yg= 1.0	150C1F2	9015	3170	72519	9015	3170	-72519
Wind angle: 0°	150C1F3	9015	3170	72519	9015	3170	-72519
	380C2F1	18030	6341	145038	18030	6341	-145038
	380C2F2	18030	6340	145038	18030	6340	-145038
	380C2F3	18030	6339	145038	18030	6339	-145038
	RTG	5388	1862	42594	5388	1862	-42594
NL4/1a	GW / opgw	2080	2741	22184	2065	3151	-23810
Wind, 10°C	150C1F1	7734	8254	74756	7687	9380	-78713
Permanent loads yg= 1.0	150C1F2	7752	7824	73334	7709	8861	-76848
Wind angle: 45°	150C1F3	7775	7288	71646	7736	8212	-74612
	380C2F1	15468	16509	149511	15375	18761	-157426
	380C2F2	15504	15649	146669	15417	17721	-153696
	380C2F3	15549	14575	143292	15471	16423	-149224
	RTG	4210	4100	39404	4187	4633	-41204
NL4/1b	GW / opgw	2170	1230	20049	2168	1302	-20151
Wind, -20°C	150C1F1	8018	4259	74705	8013	4459	-74920
Permanent loads yg= 1.0	150C1F2	8019	4182	74633	8015	4367	-74817
Wind angle: 45°	150C1F3	8021	4086	74549	8018	4252	-74698
	380C2F1	16035	8518	149411	16026	8918	-149841
	380C2F2	16039	8365	149265	16031	8734	-149634
	380C2F3	16042	8172	149098	16036	8503	-149396
	RTG	4336	2196	39409	4334	2291	-39501
NL4/3	GW / opgw	7177	3956	48874	7166	4326	-49387
Wind, -5°C	150C1F1	12390	7132	99513	12373	7704	-100401
Permanent loads yg= 1.0	150C1F2	12396	6914	99210	12381	7440	-99975
Wind angle: 45°	150C1F3	12403	6640	98860	12390	7111	-99482
	380C2F1	24780	14265	199027	24745	15407	-200802
	380C2F2	24792	13827	198420	24762	14880	-199950
	380C2F3	24806	13280	197720	24781	14222	-198965
	RTG	14398	6647	96409	14389	7133	-96878
NL4/4	GW / opgw	2694	1293	21506	2692	1364	-21579
Construction/maintenance, +5°C	150C1F1	9007	4181	72913	9003	4380	-73086
Permanent loads yg= 1.0	150C1F2	9008	4105	72854	9005	4288	-73002
Wind angle: 45°	150C1F3	9009	4010	72787	9007	4174	-72907
	380C2F1	18013	8363	145825	18007	8759	-146172
	380C2F2	18016	8211	145708	18010	8577	-146005
	380C2F3	18018	8020	145574	18014	8348	-145813
	RTG	5385	2342	42739	5383	2436	-42804
NL4/1a	GW / opgw	2012	5323	33075	2012	5323	-33075
Wind, 10°C	150C1F1	7493	15410	102890	7493	15410	-102890
Permanent loads yg= 1.0	150C1F2	7518	14424	98766	7518	14424	-98766
Wind angle: 90°	150C1F3	7553	13188	93645	7553	13188	-93645
	380C2F1	14986	30820	205779	14986	30820	-205779
	380C2F2	15036	28849	197533	15036	28849	-197533
	380C2F3	15106	26375	187291	15106	26375	-187291
	RTG	4087	7503	52625	4087	7503	-52625

NL4/1b	GW / opgw	2154	1689	20950	2154	1689	-20950
Wind, -20°C	150C1F1	7978	5527	76631	7978	5527	-76631
Permanent loads yg= 1.0	150C1F2	7985	5351	76289	7985	5351	-76289
Wind angle: 90°	150C1F3	7993	5132	75894	7993	5132	-75894
	380C2F1	15956	11054	153261	15956	11054	-153261
	380C2F2	15970	10702	152579	15970	10702	-152579
	380C2F3	15986	10263	151789	15986	10263	-151789
	RTG	4319	2797	40241	4319	2797	-40241
NL4/3	GW / opgw	7099	6309	53235	7099	6309	-53235
Wind, -5°C	150C1F1	12254	10774	107134	12254	10774	-107134
Permanent loads yg= 1.0	150C1F2	12275	10268	105831	12275	10268	-105831
Wind angle: 90°	150C1F3	12301	9635	104300	12301	9635	-104300
	380C2F1	24508	21548	214268	24508	21548	-214268
	380C2F2	24551	20535	211662	24551	20535	-211662
	380C2F3	24603	19271	208599	24603	19271	-208599
	RTG	14316	9723	100557	14316	9723	-100557
NL4/4	GW / opgw	2682	1743	22158	2682	1743	-22158
Construction/maintenance, +5°C	150C1F1	8978	5434	74476	8978	5434	-74476
Permanent loads yg= 1.0	150C1F2	8983	5261	74197	8983	5261	-74197
Wind angle: 90°	150C1F3	8989	5045	73875	8989	5045	-73875
	380C2F1	17955	10868	148953	17955	10868	-148953
	380C2F2	17965	10522	148395	17965	10522	-148395
	380C2F3	17977	10089	147751	17977	10089	-147751
	RTG	5374	2933	43332	5374	2933	-43332
NL4/1a	GW / opgw	2065	3151	23810	2080	2741	-22184
Wind, 10°C	150C1F1	7687	9380	78713	7734	8254	-74756
Permanent loads yg= 1.0	150C1F2	7709	8861	76848	7752	7824	-73334
Wind angle: -45°	150C1F3	7736	8212	74612	7775	7288	-71646
	380C2F1	15375	18761	157426	15468	16509	-149511
	380C2F2	15417	17721	153696	15504	15649	-146669
	380C2F3	15471	16423	149224	15549	14575	-143292
	RTG	4187	4633	41204	4210	4100	-39404
NL4/1b	GW / opgw	2168	1302	20151	2170	1230	-20049
Wind, -20°C	150C1F1	8013	4459	74920	8018	4259	-74705
Permanent loads yg= 1.0	150C1F2	8015	4367	74817	8019	4182	-74633
Wind angle: -45°	150C1F3	8018	4252	74698	8021	4086	-74549
	380C2F1	16026	8918	149841	16035	8518	-149411
	380C2F2	16031	8734	149634	16039	8365	-149265
	380C2F3	16036	8503	149396	16042	8172	-149098
	RTG	4334	2291	39501	4336	2196	-39409
NL4/3	GW / opgw	7166	4326	49387	7177	3956	-48874
Wind, -5°C	150C1F1	12373	7704	100401	12390	7132	-99513
Permanent loads yg= 1.0	150C1F2	12381	7440	99975	12396	6914	-99210
Wind angle: -45°	150C1F3	12390	7111	99482	12403	6640	-98860
	380C2F1	24745	15407	200802	24780	14265	-199027
	380C2F2	24762	14880	199950	24792	13827	-198420
	380C2F3	24781	14222	198965	24806	13280	-197720
	RTG	14389	7133	96878	14398	6647	-96409
NL4/4	GW / opgw	2692	1364	21579	2694	1293	-21506
Construction/maintenance, +5°C	150C1F1	9003	4380	73086	9007	4181	-72913
Permanent loads yg= 1.0	150C1F2	9005	4288	73002	9008	4105	-72854
Wind angle: -45°	150C1F3	9007	4174	72907	9009	4010	-72787
	380C2F1	18007	8759	146172	18013	8363	-145825
	380C2F2	18010	8577	146005	18016	8211	-145708
	380C2F3	18014	8348	145813	18018	8020	-145574
	RTG	5383	2436	42804	5385	2342	-42739

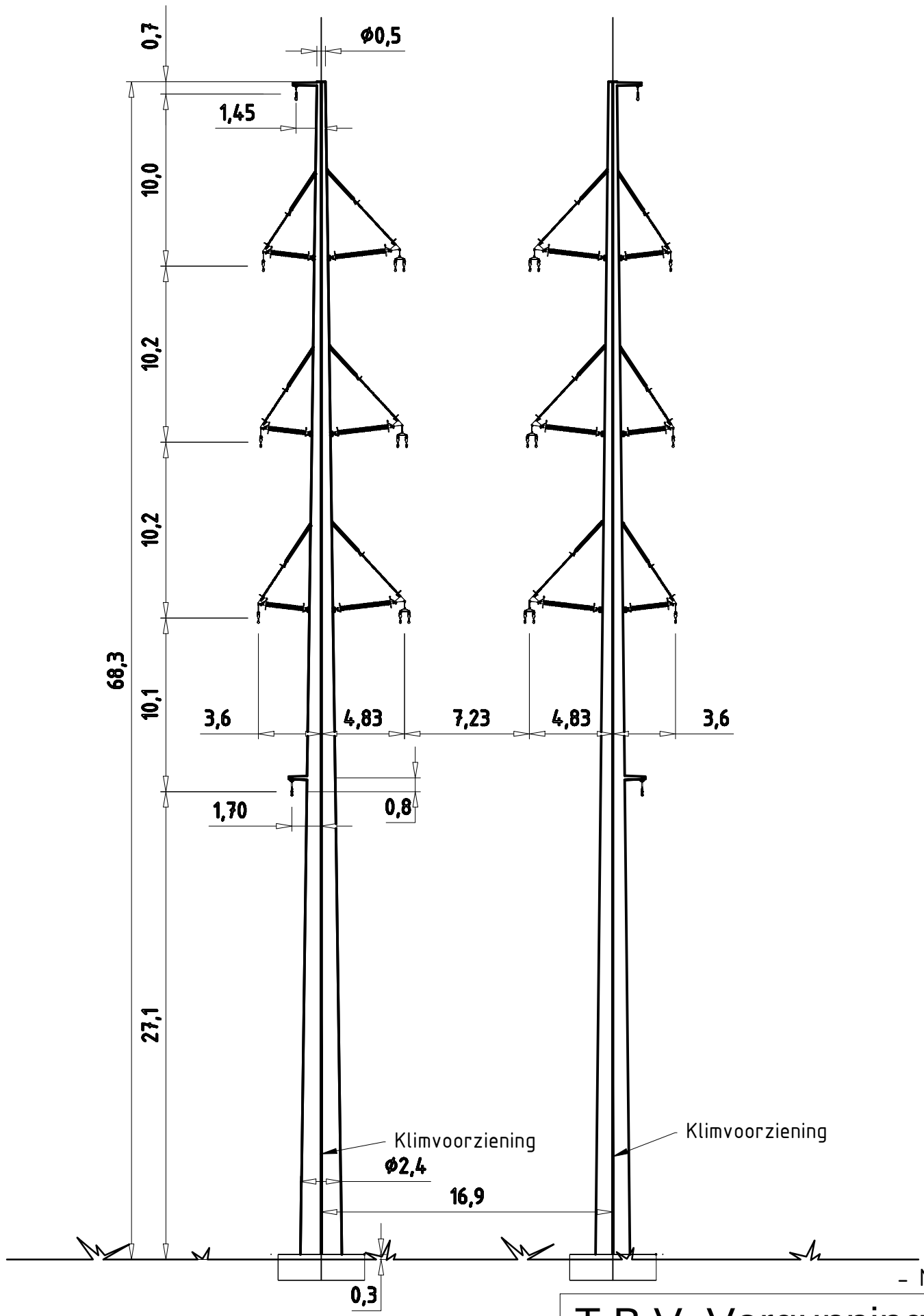

- Maatvoering indicatief

T.B.V. Vergunnings aanvraag

Wintrack
Masttype: ZWW4S400+5

- Trekparameter 1800m
- 2x380 / 2x150 Steunmast
- 400m Veldlengte
- 175°-180° Lijnhoek
- Uitvoering Staal of Beton
- Kleurstelling hoofdelement:
  Ral 9018 Papyrus white
- Kleurstelling Appendages:
  Ral 7021 Black grey

5.0	03-03-2014	Increased space between poles
4.0	11-02-2014	Modified top/botom diameter and added new braced-V
3.0	11-03-2013	Small modification

KEMA DNV

Projectname: Engineering verbinding ZW380

Third angle projection:

Drawing no.: 74102194-035-082V

Design state: Definitief		Scale: 1:300	
Drawn by: RBE	03-03-2014	Units: m	
Checked by: AJP	03-03-2014	Project no: 000.145	
Approved by: AW	03-03-2014	Company: TenneT	

Description: Wintrack Masttype ZWW4S400+5

Revision: 5.0

Format: A3

DNV KEMA Energy & Sustainability, Utrechtseweg 310, 6812 AR Arnhem, tel: +31 26 3 56 91 11, www.dnvkema.com

© 2012 - Filename: 74102194-035-082 - ZWW4S400+5 Rev5.0.dwg

ZWW4S400+10

Fundatie berekening

Bijlage CO

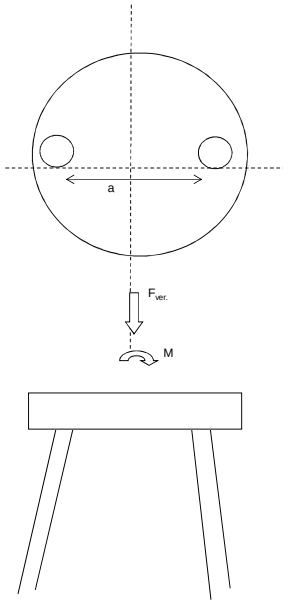

Fundatie ontwerp:
Heipaal

Afmetingen	b	400	mm	
	d	400	mm	
omtrek paal	$O_{p;gem}$	1,6	m	
schoorstand		8	:1	
α		7,125	graden	
Opstort	Diameter	4,1	m	
	Hoogte	1,8	m	
	Inhoud	23,8	m^3	
	e.g.	570	kN	
Onderplaat	Diameter	10,0	m	
	Hoogte	1,0	m	
	Inhoud	79	m^3	
	e.g.	1885	kN	
Hart paal tov rand fund.		0,6	m	
Optreden krachten				
e.g. mast		602	kN	
Fgeleiders		183	kN	
Maximale dwarskracht		560	kN	
Fmax vert (druk)		905	kN	
Fmin vert (trek)		679	kN	
Maximale moment		28966	kNm	
Moment				
F_{diag}		3497	kN	
F_{hor}		560	kN	
F_{ver}		3470	kN	
M_{hor} (tgv F_{hor})		1569	kNm	
M_{tot}		30535	kNm	reductie door opwaarste kracht water
F=M/a		3470	kN	
Verticaal reactiekracht				
Fwater (trek)		1023	kN	
Fgrond (druk)		1764	kN	
Fgrond (trek)		1470	kN	
Fdmax (druk)		2984	kN	
Ftmax (trek)		1492	kN	
Fdtot (druk)		6454	kN	
Fttot (trek)		1978	kN	
Palen druk		6	(-)	
Palen trek		7	(-)	
Totaal palen		14	(-)	Per fundering

ZWW4S400+10

TREKPALEN volgens CUR 2001-4 par. 8.

$$F_{r;trek;d} = \int_0^L O_{p;gem} \times p_{r;z;d} \times dz$$

Bijlage CO

Bepaling opneembare paalbelasting op druk

heipaal

Afmeting paal	b	0,40	m
	b	0,40	m
omtrek paal	$O_{p;gem}$	1,60	m
paalfactor	α t	0,007	
aantal palen	M	1	
aantal sonderingen	N	1	
factor invloed aantal sonderingen	ξ	0,75	
conusweerstand over wrijvingstraject	$q_{c;z;max}$	15	MPa
	$q_{c;z;rep}$	11,25	MPa
materiaalfactor	$\gamma_{m;b4}$	1,4	
factor, wisselende belastingen	$\gamma_{m;var;qc}$	1,5	
	$q_{c;z;d}$	5,36	MPa
	$p_{r;z;d}$	37,5	kN/m²
	$F_{r;trek;d;i}$	60,0	kN/m¹
	$F_{trek,d}$	596	kN/m

Bepaling opneembare trekbelasting paal

sondering	diepte		$q_{c;z}$		$P_{r;max;schacht;i}$	$F_{r;trek;d;i}$	$F_{trek,d}$
	m	m	MPa	α t	kPa	kN	kN
	0	-1	0	0,007	0,00	0,00	0
	-1	-2	0	0,007	0,00	0,00	0
	-2	-3	0	0,007	0,00	0,00	0
	-3	-4	0	0,007	0,00	0,00	0
	-4	-5	0	0,007	0,00	0,00	0
	-5	-6	0	0,007	0,00	0,00	0
	-6	-7	0	0,007	0,00	0,00	0
	-7	-8	0	0,007	0,00	0,00	0
	-8	-9	1	0,007	2,50	4,00	4
	-9	-10	3	0,007	7,50	12,00	16
	-10	-11	2	0,007	5,00	8,00	24
	-11	-12	0	0,007	0,00	0,00	24
	-12	-13	3	0,007	7,50	12,00	36
	-13	-14	2	0,007	5,00	8,00	44
	-14	-15	4	0,007	10,00	16,00	60
	-15	-16	10	0,007	25,00	40,00	100
	-16	-17	9	0,007	22,50	36,00	136
	-17	-18	8	0,007	20,00	32,00	168
	-18	-19	12	0,007	30,00	48,00	216
	-19	-20	12	0,007	30,00	48,00	264
	-20	-21	10	0,007	25,00	40,00	304
	-21	-22	11	0,007	27,50	44,00	348
	-22	-23	11	0,007	27,50	44,00	392
	-23	-24	12	0,007	30,00	48,00	440
	-24	-25	12	0,007	30,00	48,00	488
	-25	-26	12	0,007	30,00	48,00	536
	-26	-27	15	0,007	37,50	60,00	596

$F_{trek,d}$	596	kN	paalafmeting	400	mm, paalpuntnivo	-27,00	m

Paalgroep factor	10%	
$F_{trek,d}$	**536,4**	kN

ZWW4S400+10

DRUKPALEN

FUNDERINGSCONSTRUCTIE
Toelaatbare paalbelastingen

Bijlage CO

Bepaling opneembare paalbelasting op druk

heipaal

		v		
	diameter	a	2	mm
			2	mm
	Deq		0,001808	

maximale puntweerstand

$P_{r;max;punt;i}$		11,25	MN/m²
paalklasse factor	α_p	1,00	
factor paalvoet	β	1	
hoek van inwendige vrijwing van paalvoet	ϕ	40	
factor dwarsdoorsnede paalvoet	s	1,00	
minimale waarde neergaande deel	$q_{c;ll;gem}$	9,00	MN/m²
gem. sondeerwaarde neergaande deel	$q_{c;l;gem}$	14,00	MN/m²
gem. sondeerwaarde opgaande deel	$q_{c;ll;gem}$	11,00	MN/m²

maximale paalschachtwrijving

$P_{r;max;schacht;i}$		0,05	MN/m²

waarin:

paalfactor	α_s	0,010	
conusweerstand over wrijvingstraject	$q_{c;z;a}$	5,00	MN/m²

maximale draagkracht alleenstaande paal

$\mathbf{F_{r;max;i}}$		0,00	MN

waarin:

$\mathbf{F_{r;max;punt;i}}$		0,00	MN
paalpunt oppervlak	A_{punt}	0,00	m²
$\mathbf{F_{r;max;schacht;i}}$		0,00	MN
gemiddelde paalomtrek	$O_{p;gem}$	0,01	m
lengte schachtwrijving	Δl	15,00	m

Bepaling rekenwaarde van de maximale draagkracht

$F_{r;paal;max;d}$	MN	0,00	MN
materiaalfactor grond	$\gamma_{m;b}$	1,20	
waarde afhankelijk van aantal palen en aantal sonderingen	$\xi_{1;N}$	0,75	

$F_{r;paal;max;d}$	3	kN	mm, paalpuntnivo	-27,00	m

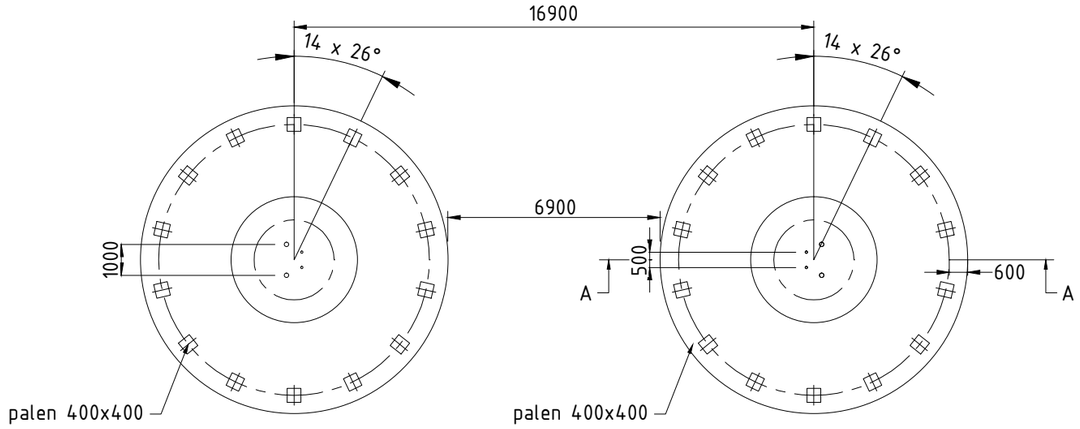

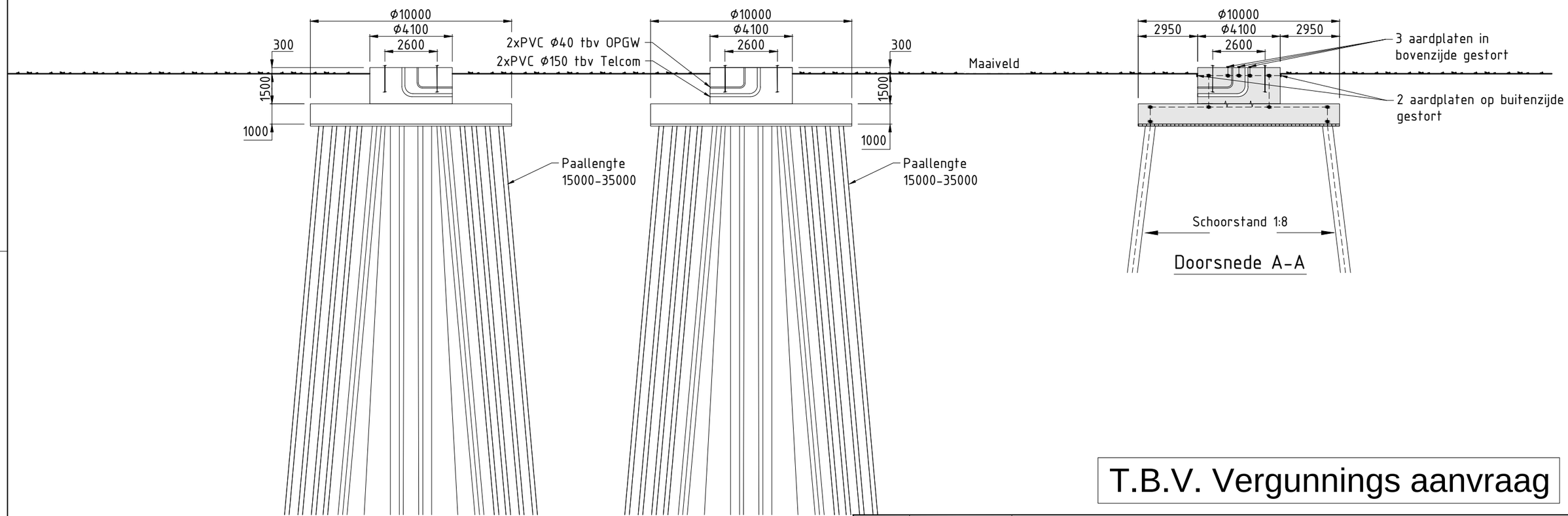

T.B.V. Vergunnings aanvraag

8.0	21-03-2014	Paal-Paal afstand aangepast
7.0	13-03-2014	Diverse aanpassingen
6.0	13-02-2014	Diverse aanpassingen

Verklaring

Gewapend beton

Werkvloer

Verklaring aarding

Ringleiding Ø16mm (FeB220) glad

Koppeling met aardstaaf in paal

Aardplaten

Opmerkingen

Maten in mm
Coordinaten in mm, in het stelsel van de rijksdriehoekmeting
Maatvoering in het 360 graden stelsel
Vellingkanten niet getekend
Ringleiding in bovenkant poer op het bovennet plaatsen in de eerste laag
Mastvoetanker afmeting exclusief mastvoetflens breedte
Afmetingen indicatief

Projectname:
Engineering verbinding ZW380

Third angle projection:

Drawing no.:
74102194-032-083V

Design state: Definitief		Scale:	1:200
Drawn by: RBE	21-03-2014	Units:	mm
Checked by: AJP	21-03-2014	Project no:	000.145
Approved by: AW	21-03-2014	Company:	TenneT

Description:
Principe ontwerp fundatie hoekmast ZWW4S400+10 masten familie

Revision: 8.0

Format: A3

DNV KEMA Energy & Sustainability, Utrechtseweg 310, 6812 AR Arnhem, tel: +31 26 3 56 91 11, www.dnvkema.com

© 2014 - Filename: 74102194-032-083 - ZWW4S400+10 Principe ontwerp fundaties Rev8.0.dwg

ZWW4S400+10

Bijlage BO

Location dependent data to obtain pressures

Wind area			2	
Terrain catagory	O=onbebouwd, B=bebouwd		O	
Hoogte		h	73.3	m
Diameter voet		d voet	2.6	m
top		d top	0.5	m
gem		d gem	1.6	m
wanddikte		t	24	mm
Oppervlakte aan voet		A	194226	mm^2
Traagheidsmoment aan voet		W_x	1.24E+08	mm^3
Weerstandsmoment aan voet		I_x	1.59E+11	mm^4
		2de orde	10.0	%
Mast: Gewicht		$F_{rep;ver}$	656	kN

Ultimate limit state	**hoogte**	**F_{ver}**	**$F_{loodrecht}$**	**$F_{//}$**	$F_{Samengesteld}$		
	m	kN	kN	kN	kN		
GW / opgw	72.6	4.9	15.7	0.0	15.7	1136	kNm
150C1F1	62.6	18.5	45.1	0.0	45.1	2825	kNm
150C1F2	52.4	18.6	42.3	0.0	42.3	2218	kNm
150C1F3	42.2	18.7	38.9	0.0	38.9	1641	kNm
380C2F1	62.6	37.0	90.3	0.0	90.3	5650	kNm
380C2F2	52.4	37.2	84.7	0.0	84.7	4437	kNm
380C2F3	42.2	37.5	77.8	0.0	77.8	3282	kNm
RTG	32.1	10.1	22.6	0.0	22.6	725	kNm

Stuwdruk	$F_{hor.}$	34.1	kN
	$M_{d;wind}$	1097	kNm
Totaal	$M_{d;tot}$	26333	kNm
Totaal moment incl. 2^{ue} orde effect	$M_{d;tot}$	28966	kNm

Normaalkracht;

Optredende normaalkracht

$N_{d;geleiders}$	183	kN
$N_{d;\ e.g.\ mast}$	787	kN
$N_{s;d;totaal}$	969	kN

Is buis plooigevoelig tgv normaalkracht: conform NEN-EN 50341 par. 7.4.5.4

	JA	
ρ_a	0.68	
A_{eff}	133037	mm^2

Optredende spanning tgv normaalkracht

$N_{sd}/A_{eff} = f_{yd}/y_{m1}$ 7 N/mm^2

Moment;

Optredende moment in de voet:

$M_{d;tot}$ 28966 kNm

Is buis plooigevoelig tgv momentkracht: conform NEN-EN 50341 par. 7.4.5.4

	JA	
ρ_a	0.98	
W_{eff}	1.22E+08	mm^3

Optredende spaning tgv moment:

$M_d/W_{eff} = f_{yd}/y_{m1}$ 237 N/mm^2

Totale spanning:

σ_d	245	N/mm^2	< 284 N/mm^2 = ACCOORD
$\sigma_{d;toegestaan}$	284	N/mm^2	==> 80% van 355 N/mm^2

Special limit state	**hoogte**	**F_{ver}**	**$F_{loodrecht}$**	**$F_{//}$**	$F_{Samengesteld}$		
	m	kN	kN	kN	kN		
GW / opgw	72.6	4.2	10.8	0.0	10.8	781	kNm
150C1F1	62.6	15.7	31.2	0.0	31.2	1955	kNm
150C1F2	52.4	15.8	29.4	0.0	29.4	1538	kNm
150C1F3	42.2	16.0	27.0	0.0	27.0	1141	kNm
380C2F1	62.6	31.5	62.5	0.0	62.5	3910	kNm
380C2F2	52.4	31.7	58.7	0.0	58.7	3077	kNm
380C2F3	42.2	31.9	54.1	0.0	54.1	2282	kNm
RTG	32.1	8.6	15.6	0.0	15.6	502	kNm

Stuwdruk	$F_{hor.}$	908	kN		
Verplaating		1.74	m	3.99	EIS TENNET VISUEE
Percentage van de verplaatsing		2.38%		5.5%	NEN-EN-50341
Hoek		2.70	graden		
Kromming		0.61%		1%	NEN-EN-50341
Fundatie rotatiestijfheid		0.005	rad		

ZWW4S400+10

Loadcases for tower strength (ultimate limit state)

		Ahead			Back		
Loadcase according to 50341-3-15	Att. Point	Vertical [N]	Transversal [N]	Longitudinal [N]	Vertical [N]	Transversal [N]	Longitudinal [N]
NL1/1a	GW / opgw	2820	890	20118	2820	890	-20118
Wind, 10°C	150C1F1	10382	3258	73891	10382	3258	-73891
Permanent loads yg= 1.2	150C1F2	10382	3256	73891	10382	3256	-73891
Wind angle: 0°	150C1F3	10382	3253	73891	10382	3253	-73891
	380C2F1	20765	6516	147783	20765	6516	-147783
	380C2F2	20765	6511	147783	20765	6511	-147783
	380C2F3	20765	6506	147783	20765	6506	-147783
	RTG	5632	1770	40192	5632	1770	-40192
NL1/1b	GW / opgw	2885	997	22782	2885	997	-22782
Wind, -20°C	150C1F1	10652	3713	84887	10652	3713	-84887
Permanent loads yg= 1.2	150C1F2	10652	3712	84887	10652	3712	-84887
Wind angle: 0°	150C1F3	10652	3712	84887	10652	3712	-84887
	380C2F1	21304	7425	169773	21304	7425	-169773
	380C2F2	21304	7424	169773	21304	7424	-169773
	380C2F3	21304	7423	169773	21304	7423	-169773
	RTG	5753	1974	45138	5753	1974	-45138
NL1/3	GW / opgw	10882	2691	61370	10882	2691	-61370
Wind, -5°C	150C1F1	17694	5228	119337	17694	5228	-119337
Permanent loads yg= 1.2	150C1F2	17694	5227	119337	17694	5227	-119337
Wind angle: 0°	150C1F3	17694	5225	119337	17694	5225	-119337
	380C2F1	35387	10456	238675	35387	10456	-238675
	380C2F2	35387	10454	238675	35387	10454	-238675
	380C2F3	35387	10451	238675	35387	10451	-238675
	RTG	21793	5382	122896	21793	5382	-122896
NL1/4	GW / opgw	3713	1125	25725	3713	1125	-25725
Construction/maintenance, +5°C	150C1F1	12187	3754	85846	12187	3754	-85846
Permanent loads yg= 1.2	150C1F2	12187	3754	85846	12187	3754	-85846
Wind angle: 0°	150C1F3	12187	3753	85846	12187	3753	-85846
	380C2F1	24375	7509	171692	24375	7509	-171692
	380C2F2	24375	7508	171692	24375	7508	-171692
	380C2F3	24375	7507	171692	24375	7507	-171692
	RTG	7418	2246	51377	7418	2246	-51377
NL1/6	GW / opgw	3161	967	22156	3161	967	-22156
Permanent, +10°C	150C1F1	11634	3546	81220	11634	3546	-81220
Permanent loads yg= 1.35	150C1F2	11634	3546	81220	11634	3546	-81220
	150C1F3	11634	3546	81220	11634	3546	-81220
	380C2F1	23267	7092	162440	23267	7092	-162440
	380C2F2	23267	7092	162440	23267	7092	-162440
	380C2F3	23267	7092	162440	23267	7092	-162440
	RTG	6313	1933	44271	6313	1933	-44271
NL1/1a	GW / opgw	2619	3929	28310	2582	4553	-30818
Wind, 10°C	150C1F1	9835	11662	92947	9708	13393	-99320
Permanent loads yg= 1.2	150C1F2	9884	11040	90757	9761	12644	-96523
Wind angle: 45°	150C1F3	9945	10277	88155	9830	11724	-93168
	380C2F1	19670	23323	185894	19415	26785	-198640
	380C2F2	19767	22081	181514	19522	25289	-193047
	380C2F3	19891	20553	176309	19660	23447	-186337
	RTG	5372	5899	49230	5307	6752	-52348
NL1/1b	GW / opgw	2867	1552	23220	2860	1663	-23404
Wind, -20°C	150C1F1	10610	5266	85799	10593	5573	-86190
Permanent loads yg= 1.2	150C1F2	10616	5155	85674	10601	5440	-86013
Wind angle: 45°	150C1F3	10622	5019	85532	10610	5277	-85812
	380C2F1	21220	10531	171598	21187	11146	-172380
	380C2F2	21231	10310	171349	21202	10880	-172027
	380C2F3	21244	10038	171065	21219	10553	-171624
	RTG	5735	2739	45557	5728	2890	-45738
NL1/3	GW / opgw	10802	5525	63154	10772	6087	-63897
Wind, -5°C	150C1F1	17548	9608	122772	17492	10481	-124196
Permanent loads yg= 1.2	150C1F2	17566	9294	122312	17517	10104	-123555
Wind angle: 45°	150C1F3	17587	8908	121787	17546	9639	-122819
	380C2F1	35095	19216	245543	34983	20962	-248392
	380C2F2	35132	18589	244625	35033	20207	-247109
	380C2F3	35175	17817	243574	35091	19278	-245638
	RTG	21713	9284	124594	21682	10050	-125327
NL1/4	GW / opgw	3702	1674	26013	3697	1782	-26138
Construction/maintenance, +5°C	150C1F1	12158	5299	86549	12146	5603	-86855
Permanent loads yg= 1.2	150C1F2	12162	5190	86452	12151	5472	-86717
Wind angle: 45°	150C1F3	12166	5055	86341	12158	5310	-86559
	380C2F1	24316	10598	173098	24292	11206	-173710
	380C2F2	24324	10380	172904	24303	10943	-173433
	380C2F3	24332	10110	172682	24315	10620	-173118
	RTG	7406	3005	51650	7402	3153	-51770

NL1/1a	GW / opgw	2467	7826	44286	2467	7826	-44286
Wind, 10°C	150C1F1	9249	22565	135757	9249	22565	-135757
Permanent loads yg= 1.2	150C1F2	9299	21168	130126	9299	21168	-130126
Wind angle: 90°	150C1F3	9370	19441	123160	9370	19441	-123160
	380C2F1	18498	45129	271513	18498	45129	-271513
	380C2F2	18599	42336	260251	18599	42336	-260251
	380C2F3	18740	38881	246321	18740	38881	-246321
	RTG	5056	11290	70681	5056	11290	-70681
NL1/1b	GW / opgw	2809	2260	24808	2809	2260	-24808
Wind, -20°C	150C1F1	10470	7220	89251	10470	7220	-89251
Permanent loads yg= 1.2	150C1F2	10492	6965	88683	10492	6965	-88683
Wind angle: 90°	150C1F3	10518	6653	88030	10518	6653	-88030
	380C2F1	20940	14439	178502	20940	14439	-178502
	380C2F2	20984	13931	177367	20984	13931	-177367
	380C2F3	21035	13305	176059	21035	13305	-176059
	RTG	5673	3698	47164	5673	3698	-47164
NL1/3	GW / opgw	10576	9085	69408	10576	9085	-69408
Wind, -5°C	150C1F1	17127	15175	134780	17127	15175	-134780
Permanent loads yg= 1.2	150C1F2	17186	14450	132883	17186	14450	-132883
Wind angle: 90°	150C1F3	17259	13559	130664	17259	13559	-130664
	380C2F1	34253	30349	269560	34253	30349	-269560
	380C2F2	34373	28899	265766	34373	28899	-265766
	380C2F3	34518	27117	261329	34518	27117	-261329
	RTG	21455	14128	131028	21455	14128	-131028
NL1/4	GW / opgw	3662	2361	27115	3662	2361	-27115
Construction/maintenance, +5°C	150C1F1	12056	7223	89282	12056	7223	-89282
Permanent loads yg= 1.2	150C1F2	12072	6973	88828	12072	6973	-88828
Wind angle: 90°	150C1F3	12091	6666	88307	12091	6666	-88307
	380C2F1	24111	14446	178564	24111	14446	-178564
	380C2F2	24144	13947	177656	24144	13947	-177656
	380C2F3	24182	13333	176615	24182	13333	-176615
	RTG	7366	3943	52741	7366	3943	-52741
NL1/1a	GW / opgw	2582	4553	30818	2619	3929	-28310
Wind, 10°C	150C1F1	9708	13393	99320	9835	11662	-92947
Permanent loads yg= 1.2	150C1F2	9761	12644	96523	9884	11040	-90757
Wind angle: -45°	150C1F3	9830	11724	93168	9945	10277	-88155
	380C2F1	19415	26785	198640	19670	23323	-185894
	380C2F2	19522	25289	193047	19767	22081	-181514
	380C2F3	19660	23447	186337	19891	20553	-176309
	RTG	5307	6752	52348	5372	5899	-49230
NL1/1b	GW / opgw	2860	1663	23404	2867	1552	-23220
Wind, -20°C	150C1F1	10593	5573	86190	10610	5266	-85799
Permanent loads yg= 1.2	150C1F2	10601	5440	86013	10616	5155	-85674
Wind angle: -45°	150C1F3	10610	5277	85812	10622	5019	-85532
	380C2F1	21187	11146	172380	21220	10531	-171598
	380C2F2	21202	10880	172027	21231	10310	-171349
	380C2F3	21219	10553	171624	21244	10038	-171065
	RTG	5728	2890	45738	5735	2739	-45557
NL1/3	GW / opgw	10772	6087	63897	10802	5525	-63154
Wind, -5°C	150C1F1	17492	10481	124196	17548	9608	-122772
Permanent loads yg= 1.2	150C1F2	17517	10104	123555	17566	9294	-122312
Wind angle: -45°	150C1F3	17546	9639	122819	17587	8908	-121787
	380C2F1	34983	20962	248392	35095	19216	-245543
	380C2F2	35033	20207	247109	35132	18589	-244625
	380C2F3	35091	19278	245638	35175	17817	-243574
	RTG	21682	10050	125327	21713	9284	-124594
NL1/4	GW / opgw	3697	1782	26138	3702	1674	-26013
Construction/maintenance, +5°C	150C1F1	12146	5603	86855	12158	5299	-86549
Permanent loads yg= 1.2	150C1F2	12151	5472	86717	12162	5190	-86452
Wind angle: -45°	150C1F3	12158	5310	86559	12166	5055	-86341
	380C2F1	24292	11206	173710	24316	10598	-173098
	380C2F2	24303	10943	173433	24324	10380	-172904
	380C2F3	24315	10620	173118	24332	10110	-172682
	RTG	7402	3153	51770	7406	3005	-51650
NL1//1a	GW / opgw	2133	702	15832	2133	702	-15832
Wind, 10°C	150C1F1	7860	2583	58428	7860	2583	-58428
Permanent loads yg= 0.9	150C1F2	7860	2581	58428	7860	2581	-58428
Wind angle: 0°	150C1F3	7860	2578	58428	7860	2578	-58428
	380C2F1	15721	5165	116856	15721	5165	-116856
	380C2F2	15721	5161	116856	15721	5161	-116856
	380C2F3	15721	5156	116856	15721	5156	-116856
	RTG	4260	1396	31612	4260	1396	-31612

NL1/1b	GW / opgw	2193	799	18256	2193	799	-18256
Wind, -20°C	150C1F1	8111	3002	68622	8111	3002	-68622
Permanent loads yg= 0.9	150C1F2	8111	3002	68622	8111	3002	-68622
Wind angle: 0°	150C1F3	8111	3001	68622	8111	3001	-68622
	380C2F1	16222	6005	137245	16222	6005	-137245
	380C2F2	16222	6004	137245	16222	6004	-137245
	380C2F3	16222	6003	137245	16222	6003	-137245
	RTG	4370	1579	36099	4370	1579	-36099
NL1/3	GW / opgw	10230	2569	58572	10230	2569	-58572
Wind, -5°C	150C1F1	15226	4650	106102	15226	4650	-106102
Permanent loads yg= 0.9	150C1F2	15226	4649	106102	15226	4649	-106102
Wind angle: 0°	150C1F3	15226	4647	106102	15226	4647	-106102
	380C2F1	30451	9300	212204	30451	9300	-212204
	380C2F2	30451	9298	212204	30451	9298	-212204
	380C2F3	30451	9295	212204	30451	9295	-212204
	RTG	20491	5137	117294	20491	5137	-117294
NL1/4	GW / opgw	3034	952	21749	3034	952	-21749
Construction/maintenance, +5°C	150C1F1	9681	3107	71017	9681	3107	-71017
Permanent loads yg= 0.9	150C1F2	9681	3107	71017	9681	3107	-71017
Wind angle: 0°	150C1F3	9681	3106	71017	9681	3106	-71017
	380C2F1	19361	6214	142035	19361	6214	-142035
	380C2F2	19361	6213	142035	19361	6213	-142035
	380C2F3	19361	6212	142035	19361	6212	-142035
	RTG	6061	1899	43420	6061	1899	-43420
NL1/6	GW / opgw	2133	691	15832	2133	691	-15832
Permanent, +10°C	150C1F1	7860	2551	58429	7860	2551	-58429
Permanent loads yg= 0.9	150C1F2	7860	2551	58429	7860	2551	-58429
	150C1F3	7860	2551	58429	7860	2551	-58429
	380C2F1	15721	5102	116858	15721	5102	-116858
	380C2F2	15721	5102	116858	15721	5102	-116858
	380C2F3	15721	5102	116858	15721	5102	-116858
	RTG	4260	1380	31612	4260	1380	-31612
NL1/1a	GW / opgw	1930	3830	26067	1902	4468	-28891
Wind, 10°C	150C1F1	7265	11234	83167	7158	13014	-90684
Permanent loads yg= 0.9	150C1F2	7308	10593	80525	7202	12246	-87414
Wind angle: 45°	150C1F3	7365	9803	77337	7261	11297	-83433
	380C2F1	14530	22467	166334	14316	26029	-181367
	380C2F2	14617	21185	161049	14404	24491	-174828
	380C2F3	14730	19607	154674	14522	22595	-166866
	RTG	3972	5646	43444	3915	6525	-47178
NL1/1b	GW / opgw	2168	1363	18895	2158	1477	-19156
Wind, -20°C	150C1F1	8053	4574	69975	8030	4889	-70541
Permanent loads yg= 0.9	150C1F2	8060	4461	69793	8040	4753	-70285
Wind angle: 45°	150C1F3	8069	4322	69586	8052	4586	-69993
	380C2F1	16106	9149	139949	16060	9778	-141081
	380C2F2	16121	8923	139586	16080	9506	-140571
	380C2F3	16138	8645	139171	16104	9171	-139987
	RTG	4345	2352	36719	4335	2507	-36980
NL1/3	GW / opgw	10144	5410	60517	10112	5974	-61321
Wind, -5°C	150C1F1	15053	9063	110322	14988	9950	-112041
Permanent loads yg= 0.9	150C1F2	15074	8746	109765	15017	9566	-111269
Wind angle: 45°	150C1F3	15099	8355	109125	15050	9095	-110379
	380C2F1	30105	18127	220643	29977	19899	-224082
	380C2F2	30148	17491	219529	30034	19133	-222537
	380C2F3	30198	16710	218251	30101	18190	-220758
	RTG	20406	9046	119153	20372	9814	-119950
NL1/4	GW / opgw	3019	1505	22132	3014	1614	-22293
Construction/maintenance, +5°C	150C1F1	9642	4663	71992	9627	4972	-72408
Permanent loads yg= 0.9	150C1F2	9647	4552	71859	9634	4838	-72220
Wind angle: 45°	150C1F3	9653	4416	71708	9642	4674	-72006
	380C2F1	19285	9327	143984	19254	9943	-144816
	380C2F2	19295	9105	143719	19268	9677	-144440
	380C2F3	19306	8832	143416	19284	9349	-144012
	RTG	6047	2661	43785	6041	2812	-43944
NL1/1a	GW / opgw	1825	7782	43272	1825	7782	-43272
Wind, 10°C	150C1F1	6826	22350	130875	6826	22350	-130875
Permanent loads yg= 0.9	150C1F2	6860	20937	124855	6860	20937	-124855
Wind angle: 90°	150C1F3	6907	19185	117337	6907	19185	-117337
	380C2F1	13653	44701	261749	13653	44701	-261749
	380C2F2	13719	41874	249710	13719	41874	-249710
	380C2F3	13815	38370	234674	13815	38370	-234674
	RTG	3728	11157	67651	3728	11157	-67651

NL1/1b	GW / opgw	2098	2097	21076	2098	2097	-21076
Wind, -20°C	150C1F1	7872	6590	74849	7872	6590	-74849
Permanent loads yg= 0.9	150C1F2	7899	6326	74064	7899	6326	-74064
Wind angle: 90°	150C1F3	7931	6003	73153	7931	6003	-73153
	380C2F1	15743	13180	149698	15743	13180	-149698
	380C2F2	15797	12653	148129	15797	12653	-148129
	380C2F3	15862	12005	146306	15862	12005	-146306
	RTG	4265	3341	38990	4265	3341	-38990
NL1/3	GW / opgw	9910	8989	67218	9910	8989	-67218
Wind, -5°C	150C1F1	14593	14724	124489	14593	14724	-124489
Permanent loads yg= 0.9	150C1F2	14655	13986	122294	14655	13986	-122294
Wind angle: 90°	150C1F3	14732	13079	119709	14732	13079	-119709
	380C2F1	29186	29448	248977	29186	29448	-248977
	380C2F2	29310	27972	244589	29310	27972	-244589
	380C2F3	29464	26158	239419	29464	26158	-239419
	RTG	20132	13912	126104	20132	13912	-126104
NL1/4	GW / opgw	2972	2205	23542	2972	2205	-23542
Construction/maintenance, +5°C	150C1F1	9515	6627	75648	9515	6627	-75648
Permanent loads yg= 0.9	150C1F2	9535	6371	75049	9535	6371	-75049
Wind angle: 90°	150C1F3	9558	6057	74358	9558	6057	-74358
	380C2F1	19030	13254	151295	19030	13254	-151295
	380C2F2	19070	12742	150097	19070	12742	-150097
	380C2F3	19116	12114	148716	19116	12114	-148716
	RTG	5996	3613	45202	5996	3613	-45202
NL1/1a	GW / opgw	1902	4468	28891	1930	3830	-26067
Wind, 10°C	150C1F1	7158	13014	90684	7265	11234	-83167
Permanent loads yg= 0.9	150C1F2	7202	12246	87414	7308	10593	-80525
Wind angle: -45°	150C1F3	7261	11297	83433	7365	9803	-77337
	380C2F1	14316	26029	181367	14530	22467	-166334
	380C2F2	14404	24491	174828	14617	21185	-161049
	380C2F3	14522	22595	166866	14730	19607	-154674
	RTG	3915	6525	47178	3972	5646	-43444
NL1/1b	GW / opgw	2158	1477	19156	2168	1363	-18895
Wind, -20°C	150C1F1	8030	4889	70541	8053	4574	-69975
Permanent loads yg= 0.9	150C1F2	8040	4753	70285	8060	4461	-69793
Wind angle: -45°	150C1F3	8052	4586	69993	8069	4322	-69586
	380C2F1	16060	9778	141081	16106	9149	-139949
	380C2F2	16080	9506	140571	16121	8923	-139586
	380C2F3	16104	9171	139987	16138	8645	-139171
	RTG	4335	2507	36980	4345	2352	-36719
NL1/3	GW / opgw	10112	5974	61321	10144	5410	-60517
Wind, -5°C	150C1F1	14988	9950	112041	15053	9063	-110322
Permanent loads yg= 0.9	150C1F2	15017	9566	111269	15074	8746	-109765
Wind angle: -45°	150C1F3	15050	9095	110379	15099	8355	-109125
	380C2F1	29977	19899	224082	30105	18127	-220643
	380C2F2	30034	19133	222537	30148	17491	-219529
	380C2F3	30101	18190	220758	30198	16710	-218251
	RTG	20372	9814	119950	20406	9046	-119153
NL1/4	GW / opgw	3014	1614	22293	3019	1505	-22132
Construction/maintenance, +5°C	150C1F1	9627	4972	72408	9642	4663	-71992
Permanent loads yg= 0.9	150C1F2	9634	4838	72220	9647	4552	-71859
Wind angle: -45°	150C1F3	9642	4674	72006	9653	4416	-71708
	380C2F1	19254	9943	144816	19285	9327	-143984
	380C2F2	19268	9677	144440	19295	9105	-143719
	380C2F3	19284	9349	144012	19306	8832	-143416
	RTG	6041	2812	43944	6047	2661	-43785

ZWW4S400+10

Loadcases for tower strength (serviceability limit state)

		Ahead			Back		
Loadcase according to 50341-3-15	Att. Point	Vertical [N]	Transversal [N]	Longitudinal [N]	Vertical [N]	Transversal [N]	Longitudinal [N]
NL4/1a	GW / opgw	2363	763	17295	2363	763	-17295
Wind, 10°C	150C1F1	8704	2803	63716	8704	2803	-63716
Permanent loads yg= 1.0	150C1F2	8704	2802	63716	8704	2802	-63716
Wind angle: 0°	150C1F3	8704	2800	63716	8704	2800	-63716
	380C2F1	17408	5606	127432	17408	5606	-127432
	380C2F2	17408	5603	127432	17408	5603	-127432
	380C2F3	17408	5600	127432	17408	5600	-127432
	RTG	4719	1519	34541	4719	1519	-34541
NL4/1b	GW / opgw	2424	866	19809	2424	866	-19809
Wind, -20°C	150C1F1	8962	3244	74212	8962	3244	-74212
Permanent loads yg= 1.0	150C1F2	8962	3244	74212	8962	3244	-74212
Wind angle: 0°	150C1F3	8962	3244	74212	8962	3244	-74212
	380C2F1	17924	6489	148423	17924	6489	-148423
	380C2F2	17924	6488	148423	17924	6488	-148423
	380C2F3	17924	6487	148424	17924	6487	-148424
	RTG	4833	1714	39199	4833	1714	-39199
NL4/3	GW / opgw	7805	2088	47644	7805	2088	-47644
Wind, -5°C	150C1F1	13661	4264	97397	13661	4264	-97397
Permanent loads yg= 1.0	150C1F2	13661	4263	97397	13661	4263	-97397
Wind angle: 0°	150C1F3	13661	4262	97397	13661	4262	-97397
	380C2F1	27321	8528	194793	27321	8528	-194793
	380C2F2	27321	8527	194793	27321	8527	-194793
	380C2F3	27321	8525	194793	27321	8525	-194793
	RTG	15626	4173	95324	15626	4173	-95324
NL4/4	GW / opgw	2966	933	21339	2966	933	-21339
Construction/maintenance, +5°C	150C1F1	9928	3170	72519	9928	3170	-72519
Permanent loads yg= 1.0	150C1F2	9928	3170	72519	9928	3170	-72519
Wind angle: 0°	150C1F3	9928	3170	72519	9928	3170	-72519
	380C2F1	19856	6341	145038	19856	6341	-145038
	380C2F2	19856	6340	145038	19856	6340	-145038
	380C2F3	19856	6340	145038	19856	6340	-145038
	RTG	5924	1862	42593	5924	1862	-42593
NL4/1a	GW / opgw	2230	2768	22285	2200	3183	-23938
Wind, 10°C	150C1F1	8359	8345	75061	8264	9490	-79112
Permanent loads yg= 1.0	150C1F2	8394	7935	73695	8305	8995	-77322
Wind angle: 45°	150C1F3	8436	7432	72089	8355	8386	-75200
	380C2F1	16718	16690	150123	16528	18980	-158225
	380C2F2	16787	15870	147389	16609	17989	-154644
	380C2F3	16873	14863	144178	16711	16772	-150401
	RTG	4558	4240	39859	4511	4802	-41806
NL4/1b	GW / opgw	2414	1234	20055	2410	1307	-20160
Wind, -20°C	150C1F1	8939	4275	74723	8929	4478	-74945
Permanent loads yg= 1.0	150C1F2	8942	4202	74652	8933	4391	-74844
Wind angle: 45°	150C1F3	8945	4112	74572	8938	4283	-74730
	380C2F1	17877	8551	149446	17858	8957	-149889
	380C2F2	17884	8404	149305	17867	8781	-149689
	380C2F3	17891	8224	149144	17877	8565	-149460
	RTG	4823	2221	39433	4819	2321	-39535
NL4/3	GW / opgw	7750	3979	48903	7729	4354	-49429
Wind, -5°C	150C1F1	13569	7178	99579	13533	7759	-100494
Permanent loads yg= 1.0	150C1F2	13581	6970	99286	13549	7508	-100081
Wind angle: 45°	150C1F3	13594	6713	98950	13568	7199	-99610
	380C2F1	27138	14357	199159	27067	15518	-200987
	380C2F2	27162	13940	198571	27099	15016	-200163
	380C2F3	27189	13427	197900	27136	14398	-199219
	RTG	15572	6775	96522	15550	7287	-97040
NL4/4	GW / opgw	2959	1298	21511	2956	1370	-21585
Construction/maintenance, +5°C	150C1F1	9911	4197	72925	9904	4399	-73104
Permanent loads yg= 1.0	150C1F2	9913	4125	72869	9907	4312	-73023
Wind angle: 45°	150C1F3	9916	4035	72804	9911	4205	-72931
	380C2F1	19822	8395	145851	19808	8797	-146208
	380C2F2	19827	8250	145737	19815	8624	-146046
	380C2F3	19832	8071	145609	19822	8409	-145863
	RTG	5917	2367	42755	5915	2465	-42827
NL4/1a	GW / opgw	2094	5382	33330	2094	5382	-33330
Wind, 10°C	150C1F1	7872	15617	103757	7872	15617	-103757
Permanent loads yg= 1.0	150C1F2	7919	14678	99826	7919	14678	-99826
Wind angle: 90°	150C1F3	7983	13520	95014	7983	13520	-95014
	380C2F1	15743	31233	207514	15743	31233	-207514
	380C2F2	15838	29357	199651	15838	29357	-199651
	380C2F3	15966	27040	190028	15966	27040	-190028
	RTG	4305	7825	53997	4305	7825	-53997

NL4/1b	GW / opgw	2380	1700	20977	2380	1700	-20977
Wind, -20°C	150C1F1	8857	5564	76706	8857	5564	-76706
Permanent loads yg= 1.0	150C1F2	8870	5397	76376	8870	5397	-76376
Wind angle: 90°	150C1F3	8885	5191	75998	8885	5191	-75998
	380C2F1	17713	11128	153413	17713	11128	-153413
	380C2F2	17740	10793	152753	17740	10793	-152753
	380C2F3	17770	10381	151997	17770	10381	-151997
	RTG	4788	2854	40349	4788	2854	-40349
NL4/3	GW / opgw	7590	6363	53361	7590	6363	-53361
Wind, -5°C	150C1F1	13290	10881	107416	13290	10881	-107416
Permanent loads yg= 1.0	150C1F2	13331	10398	106160	13331	10398	-106160
Wind angle: 90°	150C1F3	13380	9805	104699	13380	9805	-104699
	380C2F1	26580	21761	214831	26580	21761	-214831
	380C2F2	26662	20796	212319	26662	20796	-212319
	380C2F3	26761	19610	209398	26761	19610	-209398
	RTG	15392	10014	101078	15392	10014	-101078
NL4/4	GW / opgw	2935	1753	22178	2935	1753	-22178
Construction/maintenance, +5°C	150C1F1	9851	5470	74537	9851	5470	-74537
Permanent loads yg= 1.0	150C1F2	9861	5306	74267	9861	5306	-74267
Wind angle: 90°	150C1F3	9872	5103	73959	9872	5103	-73959
	380C2F1	19702	10941	149074	19702	10941	-149074
	380C2F2	19722	10611	148535	19722	10611	-148535
	380C2F3	19744	10205	147918	19744	10205	-147918
	RTG	5893	2988	43410	5893	2988	-43410
NL4/1a	GW / opgw	2200	3183	23938	2230	2768	-22285
Wind, 10°C	150C1F1	8264	9490	79112	8359	8345	-75061
Permanent loads yg= 1.0	150C1F2	8305	8995	77322	8394	7935	-73695
Wind angle: -45°	150C1F3	8355	8386	75200	8436	7432	-72089
	380C2F1	16528	18980	158225	16718	16690	-150123
	380C2F2	16609	17989	154644	16787	15870	-147389
	380C2F3	16711	16772	150401	16873	14863	-144178
	RTG	4511	4802	41806	4558	4240	-39859
NL4/1b	GW / opgw	2410	1307	20160	2414	1234	-20055
Wind, -20°C	150C1F1	8929	4478	74945	8939	4275	-74723
Permanent loads yg= 1.0	150C1F2	8933	4391	74844	8942	4202	-74652
Wind angle: -45°	150C1F3	8938	4283	74730	8945	4112	-74572
	380C2F1	17858	8957	149889	17877	8551	-149446
	380C2F2	17867	8781	149689	17884	8404	-149305
	380C2F3	17877	8565	149460	17891	8224	-149144
	RTG	4819	2321	39535	4823	2221	-39433
NL4/3	GW / opgw	7729	4354	49429	7750	3979	-48903
Wind, -5°C	150C1F1	13533	7759	100494	13569	7178	-99579
Permanent loads yg= 1.0	150C1F2	13549	7508	100081	13581	6970	-99286
Wind angle: -45°	150C1F3	13568	7199	99610	13594	6713	-98950
	380C2F1	27067	15518	200987	27138	14357	-199159
	380C2F2	27099	15016	200163	27162	13940	-198571
	380C2F3	27136	14398	199219	27189	13427	-197900
	RTG	15550	7287	97040	15572	6775	-96522
NL4/4	GW / opgw	2956	1370	21585	2959	1298	-21511
Construction/maintenance, +5°C	150C1F1	9904	4399	73104	9911	4197	-72925
Permanent loads yg= 1.0	150C1F2	9907	4312	73023	9913	4125	-72869
Wind angle: -45°	150C1F3	9911	4205	72931	9916	4035	-72804
	380C2F1	19808	8797	146208	19822	8395	-145851
	380C2F2	19815	8624	146046	19827	8250	-145737
	380C2F3	19822	8409	145863	19832	8071	-145609
	RTG	5915	2465	42827	5917	2367	-42755

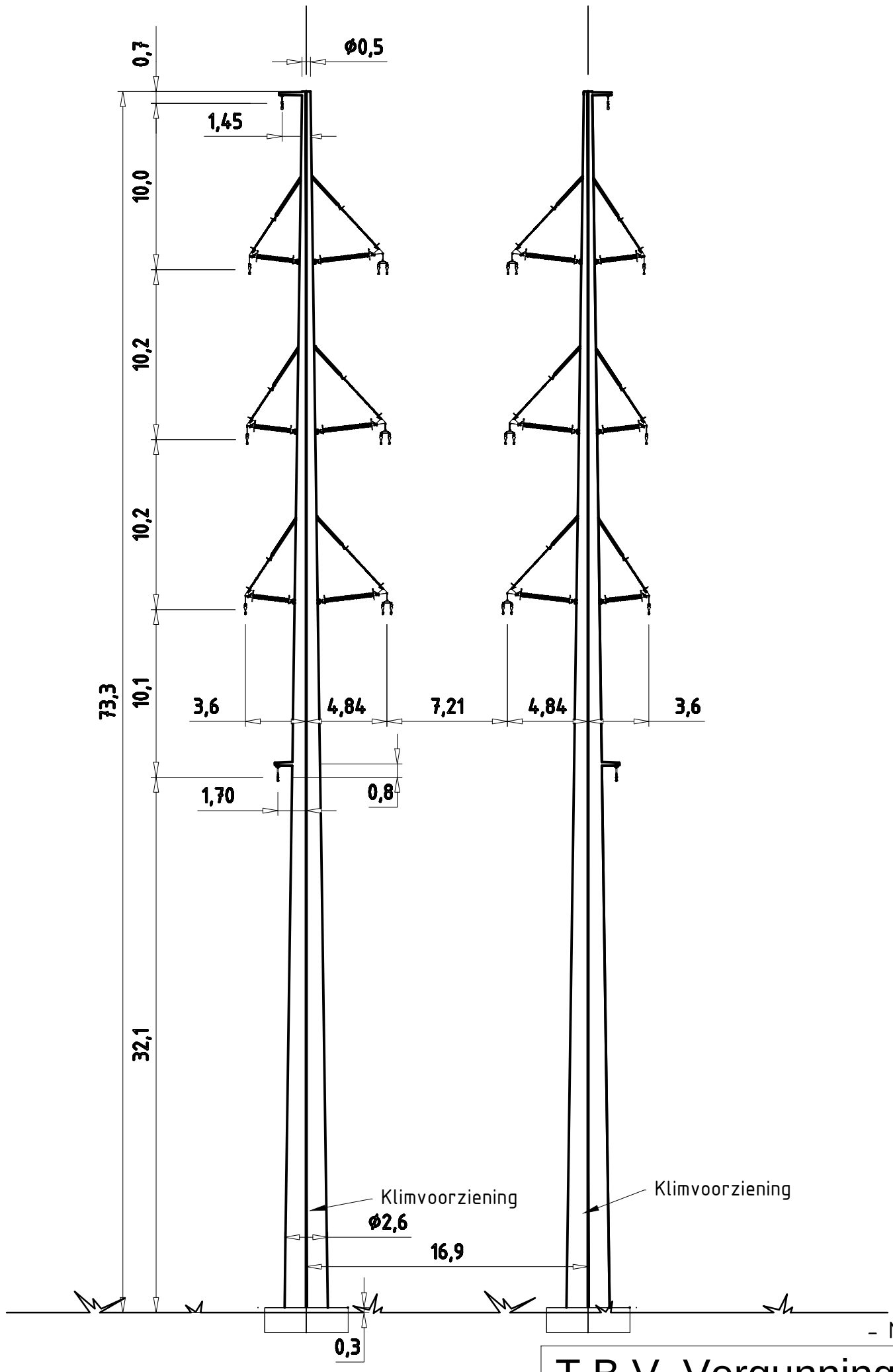

– Maatvoering indicatief

T.B.V. Vergunnings aanvraag

Wintrack
Masttype: ZWW4S400+10

- Trekparameter 1800m
- 2x380 / 2x150 Steunmast
- 400m Veldlengte
- 175°-180° Lijnhoek
- Uitvoering Staal of Beton
- Kleurstelling hoofdelement:
  Ral 9018 Papyrus white
- Kleurstelling Appendages:
  Ral 7021 Black grey

6.0	11-03-2014	Modified top diameter
5.0	03-03-2014	Modified botom diameter
4.0	28-02-2014	Modified top/botom diameter

KEMA DNV

Projectname: Engineering verbinding ZW380

Third angle projection:

Drawing no.: 74102194-035-083V

Design state: Definitief		Scale: 1:300	
Drawn by: RBE	11-03-2014	Units: m	
Checked by: AJP	11-03-2014	Project no: 000.145	
Approved by: AW	11-03-2014	Company: TenneT	

Description: Wintrack Masttype ZWW4S400+10

Revision: 6.0

Format: A3

DNV KEMA Energy & Sustainability, Utrechtseweg 310, 6812 AR Arnhem, tel: +31 26 3 56 91 11, www.dnvkema.com

© 2014 - Filename: 74102194-035-083 - ZWW4S400+10 Rev6.0.dwg

ZWW4HK400

Fundatie berekening

Bijlage CI

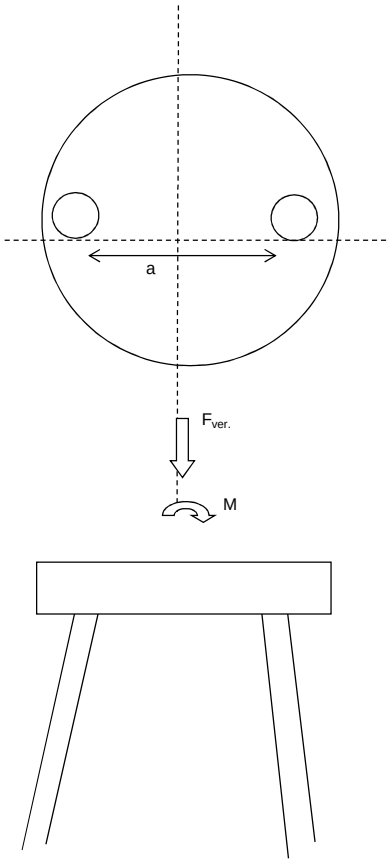

Fundatie ontwerp:
Heipaal

Afmetingen	b	400	mm
	d	400	mm
omtrek paal	$O_{p;gem}$	1,6	m
schoorstand		8	:1
α		7,125	graden
Opstort	Diameter	5,3	m
	Hoogte	1,8	m
	Inhoud	39,7	m^3
	e.g.	953	kN
Onderplaat	Diameter	12,0	m
	Hoogte	1,2	m
	Inhoud	136	m^3
	e.g.	3257	kN
Hart paal tov rand fund.		0,6	m

Optreden krachten

e.g. mast	936	kN
Fgeleiders	163	kN
Maximale dwarskracht	1064	kN
Fmax vert (druk)	1285	kN
Fmin vert (trek)	964	kN
Maximale moment	47979	kNm

Moment

F_{diag}	4775	kN	
F_{hor}	1064	kN	
F_{ver}	4738	kN	
Mhor (tgv Fhor)	3191	kNm	
M_{tot}	51170	kNm	reductie door opwaarste kracht water
F=M/a	4738	kN	

Verticaal reactiekracht

Fwater (trek)	1754	kN	
Fgrond (druk)	2458	kN	
Fgrond (trek)	2048	kN	
Fdmax (druk)	4644	kN	
Ftmax (trek)	2246	kN	
Fdtot (druk)	9382	kN	
Fttot (trek)	2492	kN	
Palen druk	9	(-)	
Palen trek	8	(-)	
Totaal palen	18	(-)	Per fundering

ZWW4HK400

TREKPALEN volgens CUR 2001-4 par. 8.

$$F_{r;trek;d} = \int_0^L O_{p;gem} \times p_{r;z;d} \times dz$$

Bijlage CI

Bepaling opneembare paalbelasting op druk

heipaal

Afmeting paal	b	0,40	m
	b	0,40	m
omtrek paal	$O_{p;gem}$	1,60	m
paalfactor	α t	0,007	
aantal palen	M	1	
aantal sonderingen	N	1	
factor invloed aantal sonderingen	ξ	0,75	
conusweerstand over wrijvingstraject	$q_{c;z;max}$	15	MPa
	$q_{c;z;rep}$	11,25	MPa
materiaalfactor	$\gamma_{m;b4}$	1,4	
factor, wisselende belastingen	$\gamma_{m;var;qc}$	1,5	
	$q_{c;z;d}$	5,36	MPa
	$p_{r;z;d}$	37,5	kN/m²
	$F_{r;trek;d;i}$	60,0	kN/m⊥
	$F_{trek,d}$	596	kN/m

Bepaling opneembare trekbelasting paal

sondering	diepte		$q_{c;z}$		$P_{r;max;schacht;i}$	$F_{r;trek;d;i}$	$F_{trek,d}$
	m	m	MPa	α t	kPa	kN	kN
	0	-1	0	0,007	0,00	0,00	0
	-1	-2	0	0,007	0,00	0,00	0
	-2	-3	0	0,007	0,00	0,00	0
	-3	-4	0	0,007	0,00	0,00	0
	-4	-5	0	0,007	0,00	0,00	0
	-5	-6	0	0,007	0,00	0,00	0
	-6	-7	0	0,007	0,00	0,00	0
	-7	-8	0	0,007	0,00	0,00	0
	-8	-9	1	0,007	2,50	4,00	4
	-9	-10	3	0,007	7,50	12,00	16
	-10	-11	2	0,007	5,00	8,00	24
	-11	-12	0	0,007	0,00	0,00	24
	-12	-13	3	0,007	7,50	12,00	36
	-13	-14	2	0,007	5,00	8,00	44
	-14	-15	4	0,007	10,00	16,00	60
	-15	-16	10	0,007	25,00	40,00	100
	-16	-17	9	0,007	22,50	36,00	136
	-17	-18	8	0,007	20,00	32,00	168
	-18	-19	12	0,007	30,00	48,00	216
	-19	-20	12	0,007	30,00	48,00	264
	-20	-21	10	0,007	25,00	40,00	304
	-21	-22	11	0,007	27,50	44,00	348
	-22	-23	11	0,007	27,50	44,00	392
	-23	-24	12	0,007	30,00	48,00	440
	-24	-25	12	0,007	30,00	48,00	488
	-25	-26	12	0,007	30,00	48,00	536
	-26	-27	15	0,007	37,50	60,00	596

$F_{trek,d}$	596	kN	paalafmeting	400	mm, paalpuntnivo	-27,00 m

Paalgroep factor	10%	
$F_{trek,d}$	**536,4**	kN

ZWW4HK400

DRUKPALEN

FUNDERINGSCONSTRUCTIE
Toelaatbare paalbelastingen

Bijlage CI

Bepaling opneembare paalbelasting op druk

heipaal			v		
		diameter	a	2	mm
				2	mm
		Deq		0,001808	

maximale puntweerstand

$P_{r;max;punt;i}$		11,25	MN/m²
paalklasse factor	α_p	1,00	
factor paalvoet	β	1	
hoek van inwendige vrijwing van paalvoet	ϕ	40	
factor dwarsdoorsnede paalvoet	s	1,00	
minimale waarde neergaande deel	$q_{c;II;gem}$	9,00	MN/m²
gem. sondeerwaarde neergaande deel	$q_{c;I;gem}$	14,00	MN/m²
gem. sondeerwaarde opgaande deel	$q_{c;III;gem}$	11,00	MN/m²

maximale paalschachtwrijving

$P_{r;max;schacht;i}$		0,05	MN/m²

waarin:

paalfactor	α_s	0,010	
conusweerstand over wrijvingstraject	$q_{c;z;a}$	5,00	MN/m²

maximale draagkracht alleenstaande paal

$\mathbf{F_{r;max;i}}$		0,00	MN

waarin:

$\mathbf{F_{r;max;punt;i}}$		0,00	MN
paalpunt oppervlak	A_{punt}	0,00	m²
$\mathbf{F_{r;max;schacht;i}}$		0,00	MN
gemiddelde paalomtrek	$O_{p;gem}$	0,01	m
lengte schachtwrijving	Δl	15,00	m

Bepaling rekenwaarde van de maximale draagkracht

$F_{r;paal;max;d}$	MN	0,00	MN
materiaalfactor grond	$\gamma_{m;b}$	1,20	
waarde afhankelijk van aantal palen en aantal sonderingen	$\xi_{1;N}$	0,75	

$F_{r;paal;max;d}$	3	kN	mm, paalpuntnivo	-27,00 m

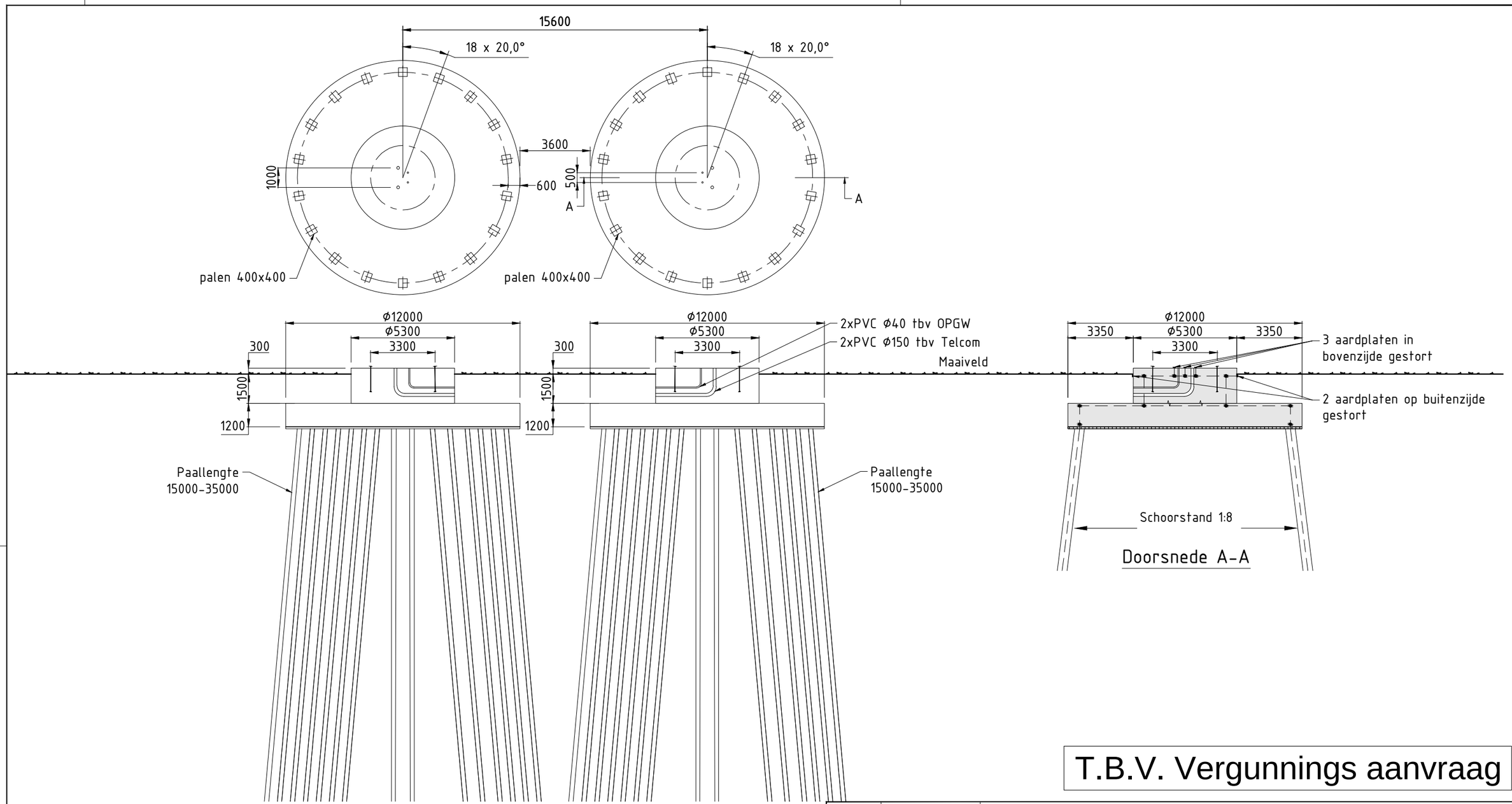

T.B.V. Vergunnings aanvraag

7.0	10-03-2014	Diverse aanpassingen
6.0	25-06-2013	Diverse aanpassingen
5.0	13-02-2014	Diverse aanpassingen

Verklaring

Gewapend beton

Werkvloer

Verklaring aarding

Ringleiding Ø16mm (FeB220) glad

Koppeling met aardstaaf in paal

Aardplaten

Opmerkingen

Maten in mm
Coordinaten in mm, in het stelsel van de rijksdriehoekmeting
Maatvoering in het 360 graden stelsel
Vellingkanten niet getekend
Ringleiding in bovenkant poer op het bovennet
plaatsen in de eerste laag
Mastvoetanker afmeting exclusief mastvoetflens breedte
Afmetingen indicatief

Projectname:
Engineering verbinding ZW380

Third angle projection:

Drawing no.:
74102194-032-091V

Design state: Definitief		Scale:	1:200
Drawn by:	RBE	10-03-2014	Units: mm
Checked by:	AJP	10-03-2014	Project no: 000.145
Approved by:	AW	10-03-2014	Company: TenneT

Description:
Principe ontwerp fundatie hoekmast
ZWW4HK400 masten familie

Revision: 7.0

Format: A3

DNV KEMA Energy & Sustainability, Utrechtseweg 310, 6812 AR Arnhem, tel: +31 26 3 56 91 11, www.dnvkema.com

© 2014 - Filename: 74102194-032-091 - ZWW4HK400 Principe ontwerp fundaties_rev7.0.dwg

ZWW4HK400

Bijlage BI

Location dependent data to obtain pressures

Wind area			2	
Terrain catagory	O=onbebouwd, B=bebouwd		O	
Hoogte		h	63.2	m
Diameter voet		d voet	3.3	m
top		d top	0.8	m
gem		d gem	2.1	m
wanddikte		t	24	mm
Oppervlakte aan voet		A	247005	mm^2
Traagheidsmoment aan voet		W_x	2.01E+08	mm^3
Weerstandsmoment aan voet		I_x	3.28E+11	mm^4
		2de orde	10.0	%
Mast: Gewicht		$F_{rep;ver}$	751	kN

Ultimate limit state	**hoogte**	F_{ver}	$F_{loodrecht}$	$F_{//}$	$F_{Samengesteld}$		
	m	kN	kN	kN	kN		
GW / opgw	62.6	3.9	15.6	-41.1	43.9	2751	kNm
150C1F1	52.6	9.9	33.0	-97.2	102.7	5400	kNm
150C1F2	42.4	9.9	32.0	-95.5	100.8	4272	kNm
150C1F3	32.2	9.9	30.8	-93.5	98.5	3171	kNm
380C2F1	52.6	19.8	66.0	-194.4	205.3	10799	kNm
380C2F2	42.4	19.8	64.0	-191.1	201.5	8544	kNm
380C2F3	32.2	19.8	61.5	-187.1	196.9	6342	kNm
RTG	22.1	7.8	24.9	-71.1	75.3	1664	kNm

Stuwdruk	$F_{hor.}$	37.6	kN
	$M_{d;wind}$	1063	kNm
Totaal	$M_{d;tot}$	43617	kNm
Totaal moment incl. 2^{ue} orde effect	$M_{d;tot}$	47979	kNm

Normaalkracht;

Optredende normaalkracht

$N_{d;geleiders}$		101	kN
$N_{d;\ e.g.\ mast}$		901	kN
$N_{s;d;totaal}$		1064	kN

Is buis plooigevoelig tgv normaalkracht: conform NEN-EN 50341 par. 7.4.5.4 — JA

	r_a	0.60	
	A_{eff}	149019	mm^2

Optredende spanning tgv normaalkracht

$N_{sd}/A_{eff} = f_{yd}/y_{m1}$ — 7 N/mm^2

Moment;

Optredende moment in de voet:

$M_{d;tot}$ — 47979 kNm

Is buis plooigevoelig tgv momentkracht: conform NEN-EN 50341 par. 7.4.5.4 — JA

	r_a	0.90	
	W_{eff}	1.81E+08	mm^3

Optredende spaning tgv moment:

$M_d/W_{eff} = f_{yd}/y_{m1}$ — 271 N/mm^2

Totale spanning:

	s_d	271	N/mm^2
	$s_{d;toegestaan}$	284	N/mm^2

< 284 N/mm^2 = ACCOORD

==> 80% van 355 N/mm^2

Special limit state	**hoogte**	F_{ver}	$F_{loodrecht}$	$F_{//}$	$F_{Samengesteld}$		
	m	kN	kN	kN	kN		
GW / opgw	62.6	3.9	23.3	0.0	23.3	1458	kNm
150C1F1	52.6	14.2	70.6	0.0	70.6	3712	kNm
150C1F2	42.4	14.2	67.0	0.0	67.0	2839	kNm
150C1F3	32.2	14.2	62.4	0.0	62.4	2009	kNm
380C2F1	52.6	28.4	141.1	0.0	141.1	7423	kNm
380C2F2	42.4	28.4	133.9	0.0	133.9	5678	kNm
380C2F3	32.2	28.4	124.8	0.0	124.8	4018	kNm
RTG	22.1	3.9	17.3	-46.9	49.9	1104	kNm

Stuwdruk	$F_{hor.}$	1010	kN		
Verplaating		1.06	m	3.44	EIS TENNET VISUEE
Percentage van de verplaatsing		1.67%		5.5%	NEN-EN-50341
Hoek		1.72	graden		
Kromming		0.35%		1%	NEN-EN-50341
Fundatie rotatiestijfheid		0.005	rad		

ZWW4HK400

Loadcases for tower strength (ultimate limit state)

		Ahead			Back		
Loadcase according to 50341-3-15	Att. Point	Vertical [N]	Transversal [N]	Longitudinal [N]	Vertical [N]	Transversal [N]	Longitudinal [N]
NL1/1a	GW / opgw	2313	5642	19572	2313	5642	-19572
Wind, 10°C	150C1F1	8522	20309	71623	8522	20309	-71623
Permanent loads yg= 1.2	150C1F2	8522	20208	71576	8522	20208	-71576
Wind angle: 0°	150C1F3	8522	20082	71524	8522	20082	-71524
	380C2F1	17045	40618	143247	17045	40618	-143247
	380C2F2	17045	40417	143152	17045	40417	-143152
	380C2F3	17045	40164	143048	17045	40164	-143048
	RTG	0	0	0	4620	10939	-38915
NL1/1b	GW / opgw	2312	5979	22016	2312	5979	-22016
Wind, -20°C	150C1F1	8518	22204	82034	8518	22204	-82034
Permanent loads yg= 1.2	150C1F2	8518	22187	82036	8518	22187	-82036
Wind angle: 0°	150C1F3	8518	22165	82038	8518	22165	-82038
	380C2F1	17036	44409	164069	17036	44409	-164069
	380C2F2	17036	44375	164072	17036	44375	-164072
	380C2F3	17036	44331	164076	17036	44331	-164076
	RTG	0	0	0	4618	11791	-43623
NL1/3	GW / opgw	9331	16292	59274	9331	16292	-59274
Wind, -5°C	150C1F1	14688	31519	115300	14688	31519	-115300
Permanent loads yg= 1.2	150C1F2	14688	31470	115301	14688	31470	-115301
Wind angle: 0°	150C1F3	14688	31408	115304	14688	31408	-115304
	380C2F1	29376	63038	230599	29376	63038	-230599
	380C2F2	29376	62940	230602	29376	62940	-230602
	380C2F3	29376	62816	230608	29376	62816	-230608
	RTG	0	0	0	18688	32337	-118727
NL1/4	GW / opgw	3065	6740	24858	3065	6740	-24858
Construction/maintenance, +5°C	150C1F1	10026	22453	82960	10026	22453	-82960
Permanent loads yg= 1.2	150C1F2	10026	22436	82962	10026	22436	-82962
Wind angle: 0°	150C1F3	10026	22414	82965	10026	22414	-82965
	380C2F1	20053	44905	165920	20053	44905	-165920
	380C2F2	20053	44871	165924	20053	44871	-165924
	380C2F3	20053	44828	165930	20053	44828	-165930
	RTG	0	0	0	6124	13407	-49654
NL1/6	GW / opgw	2603	5740	21422	2603	5740	-21422
Permanent, +10°C	150C1F1	9589	21041	78528	9589	21041	-78528
Permanent loads yg= 1.35	150C1F2	9589	21041	78528	9589	21041	-78528
	150C1F3	9589	21041	78528	9589	21041	-78528
	380C2F1	19177	42083	157056	19177	42083	-157056
	380C2F2	19177	42083	157056	19177	42083	-157056
	380C2F3	19177	42083	157056	19177	42083	-157056
	RTG	0	0	0	5198	11469	-42804
NL1/1a	GW / opgw	2314	7341	21850	2315	13636	-34239
Wind, 10°C	150C1F1	8523	24649	76427	8527	41255	-107248
Permanent loads yg= 1.2	150C1F2	8523	24112	75647	8527	39143	-103042
Wind angle: 45°	150C1F3	8523	23449	74733	8526	36475	-97775
	380C2F1	17046	49298	152854	17055	82509	-214495
	380C2F2	17046	48224	151293	17054	78286	-206083
	380C2F3	17046	46898	149466	17052	72950	-195550
	RTG	0	0	0	4622	20280	-54290
NL1/1b	GW / opgw	2312	6214	22081	2312	7032	-22918
Wind, -20°C	150C1F1	8518	22840	82131	8518	24956	-83805
Permanent loads yg= 1.2	150C1F2	8518	22769	82107	8518	24680	-83505
Wind angle: 45°	150C1F3	8518	22678	82081	8518	24336	-83161
	380C2F1	17036	45681	164262	17036	49913	-167610
	380C2F2	17036	45537	164214	17036	49359	-167011
	380C2F3	17036	45356	164162	17036	48672	-166322
	RTG	0	0	0	4618	13016	-44300
NL1/3	GW / opgw	9332	17469	59491	9333	21392	-62725
Wind, -5°C	150C1F1	14688	33360	115804	14690	39726	-122166
Permanent loads yg= 1.2	150C1F2	14688	33148	115699	14689	38885	-121082
Wind angle: 45°	150C1F3	14688	32883	115583	14689	37844	-119815
	380C2F1	29376	66719	231608	29380	79451	-244332
	380C2F2	29376	66297	231398	29379	77771	-242163
	380C2F3	29376	65767	231166	29378	75688	-239630
	RTG	0	0	0	18690	38360	-121234
NL1/4	GW / opgw	3066	6965	24884	3066	7701	-25412
Construction/maintenance, +5°C	150C1F1	10026	23075	83003	10027	25074	-84237
Permanent loads yg= 1.2	150C1F2	10026	23005	82987	10027	24816	-84010
Wind angle: 45°	150C1F3	10026	22917	82972	10026	24495	-83750
	380C2F1	20053	46149	166005	20053	50147	-168475
	380C2F2	20053	46010	165975	20053	49632	-168019
	380C2F3	20053	45834	165943	20053	48990	-167500
	RTG	0	0	0	6124	14552	-50029

NL1/1a	GW / opgw	2316	16038	39137	2316	16038	-39137
Wind, 10°C	150C1F1	8529	47872	120531	8529	47872	-120531
Permanent loads yg= 1.2	150C1F2	8528	45214	115185	8528	45214	-115185
Wind angle: 90°	150C1F3	8527	41832	108401	8527	41832	-108401
	380C2F1	17058	95743	241062	17058	95743	-241062
	380C2F2	17057	90427	230369	17057	90427	-230369
	380C2F3	17055	83663	216802	17055	83663	-216802
	RTG	0	0	0	4623	23333	-60459
NL1/1b	GW / opgw	2312	7388	23436	2312	7388	-23436
Wind, -20°C	150C1F1	8518	25859	84895	8518	25859	-84895
Permanent loads yg= 1.2	150C1F2	8518	25490	84430	8518	25490	-84430
Wind angle: 90°	150C1F3	8518	25033	83891	8518	25033	-83891
	380C2F1	17037	51718	169791	17037	51718	-169791
	380C2F2	17037	50979	168860	17037	50979	-168860
	380C2F3	17036	50066	167782	17036	50066	-167782
	RTG	0	0	0	4618	13411	-44734
NL1/3	GW / opgw	9334	23040	64696	9334	23040	-64696
Wind, -5°C	150C1F1	14691	42459	126000	14691	42459	-126000
Permanent loads yg= 1.2	150C1F2	14690	41342	124384	14690	41342	-124384
Wind angle: 90°	150C1F3	14690	39958	122475	14690	39958	-122475
	380C2F1	29381	84919	252000	29381	84919	-252000
	380C2F2	29381	82685	248768	29381	82685	-248768
	380C2F3	29380	79915	244949	29380	79915	-244949
	RTG	0	0	0	18691	40243	-122907
NL1/4	GW / opgw	3066	8012	25760	3066	8012	-25760
Construction/maintenance, +5°C	150C1F1	10027	25909	85076	10027	25909	-85076
Permanent loads yg= 1.2	150C1F2	10027	25568	84717	10027	25568	-84717
Wind angle: 90°	150C1F3	10027	25145	84303	10027	25145	-84303
	380C2F1	20053	51818	170153	20053	51818	-170153
	380C2F2	20053	51136	169433	20053	51136	-169433
	380C2F3	20053	50290	168606	20053	50290	-168606
	RTG	0	0	0	6124	14905	-50305
NL1/1a	GW / opgw	2315	13636	34239	2314	7341	-21850
Wind, 10°C	150C1F1	8527	41255	107248	8523	24649	-76427
Permanent loads yg= 1.2	150C1F2	8527	39143	103042	8523	24112	-75647
Wind angle: -45°	150C1F3	8526	36475	97775	8523	23449	-74733
	380C2F1	17055	82509	214495	17046	49298	-152854
	380C2F2	17054	78286	206083	17046	48224	-151293
	380C2F3	17052	72950	195550	17046	46898	-149466
	RTG	0	0	0	4620	12848	-40820
NL1/1b	GW / opgw	2312	7032	22918	2312	6214	-22081
Wind, -20°C	150C1F1	8518	24956	83805	8518	22840	-82131
Permanent loads yg= 1.2	150C1F2	8518	24680	83505	8518	22769	-82107
Wind angle: -45°	150C1F3	8518	24336	83161	8518	22678	-82081
	380C2F1	17036	49913	167610	17036	45681	-164262
	380C2F2	17036	49359	167011	17036	45537	-164214
	380C2F3	17036	48672	166322	17036	45356	-164162
	RTG	0	0	0	4618	12078	-43652
NL1/3	GW / opgw	9333	21392	62725	9332	17469	-59491
Wind, -5°C	150C1F1	14690	39726	122166	14688	33360	-115804
Permanent loads yg= 1.2	150C1F2	14689	38885	121082	14688	33148	-115699
Wind angle: -45°	150C1F3	14689	37844	119815	14688	32883	-115583
	380C2F1	29380	79451	244332	29376	66719	-231608
	380C2F2	29379	77771	242163	29376	66297	-231398
	380C2F3	29378	75688	239630	29376	65767	-231166
	RTG	0	0	0	18688	33785	-118778
NL1/4	GW / opgw	3066	7701	25412	3066	6965	-24884
Construction/maintenance, +5°C	150C1F1	10027	25074	84237	10026	23075	-83003
Permanent loads yg= 1.2	150C1F2	10027	24816	84010	10026	23005	-82987
Wind angle: -45°	150C1F3	10026	24495	83750	10026	22917	-82972
	380C2F1	20053	50147	168475	20053	46149	-166005
	380C2F2	20053	49632	168019	20053	46010	-165975
	380C2F3	20053	48990	167500	20053	45834	-165943
	RTG	0	0	0	6124	13686	-49651
NL1//1a	GW / opgw	1735	4557	15520	1735	4557	-15520
Wind, 10°C	150C1F1	6390	16356	56872	6390	16356	-56872
Permanent loads yg= 0.9	150C1F2	6390	16247	56795	6390	16247	-56795
Wind angle: 0°	150C1F3	6390	16112	56708	6390	16112	-56708
	380C2F1	12781	32712	113743	12781	32712	-113743
	380C2F2	12781	32495	113589	12781	32495	-113589
	380C2F3	12781	32224	113416	12781	32224	-113416
	RTG	0	0	0	3464	8737	-30698

NL1/1b	GW / opgw	1734	4807	17644	1734	4807	-17644
Wind, -20°C	150C1F1	6387	17993	66318	6387	17993	-66318
Permanent loads yg= 0.9	150C1F2	6387	17976	66318	6387	17976	-66318
Wind angle: 0°	150C1F3	6387	17953	66318	6387	17953	-66318
	380C2F1	12774	35986	132635	12774	35986	-132635
	380C2F2	12774	35951	132635	12774	35951	-132635
	380C2F3	12774	35907	132637	12774	35907	-132637
	RTG	0	0	0	3463	9450	-34887
NL1/3	GW / opgw	8751	15568	56573	8751	15568	-56573
Wind, -5°C	150C1F1	12554	28094	102519	12554	28094	-102519
Permanent loads yg= 0.9	150C1F2	12554	28045	102518	12554	28045	-102518
Wind angle: 0°	150C1F3	12554	27982	102518	12554	27982	-102518
	380C2F1	25109	56188	205038	25109	56188	-205038
	380C2F2	25109	56089	205035	25109	56089	-205035
	380C2F3	25109	55964	205036	25109	55964	-205036
	RTG	0	0	0	17529	30887	-113313
NL1/4	GW / opgw	2487	5711	21016	2487	5711	-21016
Construction/maintenance, +5°C	150C1F1	7894	18612	68628	7894	18612	-68628
Permanent loads yg= 0.9	150C1F2	7894	18595	68629	7894	18595	-68629
Wind angle: 0°	150C1F3	7894	18573	68631	7894	18573	-68631
	380C2F1	15788	37224	137256	15788	37224	-137256
	380C2F2	15788	37190	137258	15788	37190	-137258
	380C2F3	15788	37146	137262	15788	37146	-137262
	RTG	0	0	0	4968	11346	-41962
NL1/6	GW / opgw	1735	4102	15307	1735	4102	-15307
Permanent, +10°C	150C1F1	6390	15137	56492	6390	15137	-56492
Permanent loads yg= 0.9	150C1F2	6390	15137	56492	6390	15137	-56492
	150C1F3	6390	15137	56492	6390	15137	-56492
	380C2F1	12781	30274	112983	12781	30274	-112983
	380C2F2	12781	30274	112983	12781	30274	-112983
	380C2F3	12781	30274	112983	12781	30274	-112983
	RTG	0	0	0	3464	8190	-30564
NL1/1a	GW / opgw	1735	6484	18653	1736	13263	-32850
Wind, 10°C	150C1F1	6391	21253	63754	6395	39507	-100730
Permanent loads yg= 0.9	150C1F2	6391	20639	62687	6394	37259	-96016
Wind angle: 45°	150C1F3	6391	19881	61420	6394	34395	-90018
	380C2F1	12782	42505	127508	12790	79014	-201459
	380C2F2	12782	41278	125374	12789	74519	-192033
	380C2F3	12782	39762	122840	12788	68790	-180036
	RTG	0	0	0	3466	19144	-50054
NL1/1b	GW / opgw	1734	5057	17763	1734	5982	-19000
Wind, -20°C	150C1F1	6387	18659	66528	6387	21016	-69102
Permanent loads yg= 0.9	150C1F2	6387	18583	66485	6387	20701	-68659
Wind angle: 45°	150C1F3	6387	18486	66438	6387	20312	-68144
	380C2F1	12774	37319	133056	12774	42032	-138204
	380C2F2	12774	37165	132971	12774	41402	-137318
	380C2F3	12774	36973	132876	12774	40624	-136288
	RTG	0	0	0	3463	10783	-35969
NL1/3	GW / opgw	8751	16756	56833	8753	20763	-60379
Wind, -5°C	150C1F1	12555	29991	103232	12556	36758	-111097
Permanent loads yg= 0.9	150C1F2	12554	29771	103094	12556	35859	-109790
Wind angle: 45°	150C1F3	12554	29495	102939	12556	34744	-108250
	380C2F1	25109	59981	206465	25112	73517	-222195
	380C2F2	25109	59541	206188	25112	71717	-219580
	380C2F3	25109	58990	205878	25111	69489	-216500
	RTG	0	0	0	17531	36995	-116144
NL1/4	GW / opgw	2487	5942	21067	2487	6730	-21790
Construction/maintenance, +5°C	150C1F1	7894	19253	68740	7894	21403	-70542
Permanent loads yg= 0.9	150C1F2	7894	19180	68714	7894	21121	-70222
Wind angle: 45°	150C1F3	7894	19089	68685	7894	20771	-69853
	380C2F1	15788	38506	137480	15788	42807	-141084
	380C2F2	15788	38360	137427	15788	42242	-140444
	380C2F3	15788	38177	137369	15788	41542	-139707
	RTG	0	0	0	4968	12541	-42527
NL1/1a	GW / opgw	1737	15745	38044	1737	15745	-38044
Wind, 10°C	150C1F1	6396	46464	115283	6396	46464	-115283
Permanent loads yg= 0.9	150C1F2	6396	43683	109477	6396	43683	-109477
Wind angle: 90°	150C1F3	6395	40118	102012	6395	40118	-102012
	380C2F1	12793	92929	230566	12793	92929	-230566
	380C2F2	12791	87366	218954	12791	87366	-218954
	380C2F3	12790	80237	204024	12790	80237	-204024
	RTG	0	0	0	3467	22399	-56976

NL1/1b	GW / opgw	1734	6393	19722	1734	6393	-19722
Wind, -20°C	150C1F1	6387	22050	70684	6387	22050	-70684
Permanent loads yg= 0.9	150C1F2	6387	21626	70014	6387	21626	-70014
Wind angle: 90°	150C1F3	6387	21103	69228	6387	21103	-69228
	380C2F1	12775	44101	141369	12775	44101	-141369
	380C2F2	12775	43253	140028	12775	43253	-140028
	380C2F3	12775	42207	138457	12775	42207	-138457
	RTG	0	0	0	3463	11234	-36607
NL1/3	GW / opgw	8754	22451	62501	8754	22451	-62501
Wind, -5°C	150C1F1	12557	39686	115656	12557	39686	-115656
Permanent loads yg= 0.9	150C1F2	12557	38491	113745	12557	38491	-113745
Wind angle: 90°	150C1F3	12556	37007	111468	12556	37007	-111468
	380C2F1	25114	79372	231311	25114	79372	-231311
	380C2F2	25113	76981	227490	25113	76981	-227490
	380C2F3	25113	74015	222935	25113	74015	-222935
	RTG	0	0	0	17532	38920	-117975
NL1/4	GW / opgw	2487	7070	22246	2487	7070	-22246
Construction/maintenance, +5°C	150C1F1	7894	22325	71703	7894	22325	-71703
Permanent loads yg= 0.9	150C1F2	7894	21948	71208	7894	21948	-71208
Wind angle: 90°	150C1F3	7894	21482	70634	7894	21482	-70634
	380C2F1	15789	44650	143406	15789	44650	-143406
	380C2F2	15789	43896	142416	15789	43896	-142416
	380C2F3	15788	42963	141268	15788	42963	-141268
	RTG	0	0	0	4968	12922	-42903
NL1/1a	GW / opgw	1736	13263	32850	1735	6484	-18653
Wind, 10°C	150C1F1	6395	39507	100730	6391	21253	-63754
Permanent loads yg= 0.9	150C1F2	6394	37259	96016	6391	20639	-62687
Wind angle: -45°	150C1F3	6394	34395	90018	6391	19881	-61420
	380C2F1	12790	79014	201459	12782	42505	-127508
	380C2F2	12789	74519	192033	12782	41278	-125374
	380C2F3	12788	68790	180036	12782	39762	-122840
	RTG	0	0	0	3465	10877	-33467
NL1/1b	GW / opgw	1734	5982	19000	1734	5057	-17763
Wind, -20°C	150C1F1	6387	21016	69102	6387	18659	-66528
Permanent loads yg= 0.9	150C1F2	6387	20701	68659	6387	18583	-66485
Wind angle: -45°	150C1F3	6387	20312	68144	6387	18486	-66438
	380C2F1	12774	42032	138204	12774	37319	-133056
	380C2F2	12774	41402	137318	12774	37165	-132971
	380C2F3	12774	40624	136288	12774	36973	-132876
	RTG	0	0	0	3463	9749	-34960
NL1/3	GW / opgw	8753	20763	60379	8751	16756	-56833
Wind, -5°C	150C1F1	12556	36758	111097	12555	29991	-103232
Permanent loads yg= 0.9	150C1F2	12556	35859	109790	12554	29771	-103094
Wind angle: -45°	150C1F3	12556	34744	108250	12554	29495	-102939
	380C2F1	25112	73517	222195	25109	59981	-206465
	380C2F2	25112	71717	219580	25109	59541	-206188
	380C2F3	25111	69489	216500	25109	58990	-205878
	RTG	0	0	0	17529	32344	-113401
NL1/4	GW / opgw	2487	6730	21790	2487	5942	-21067
Construction/maintenance, +5°C	150C1F1	7894	21403	70542	7894	19253	-68740
Permanent loads yg= 0.9	150C1F2	7894	21121	70222	7894	19180	-68714
Wind angle: -45°	150C1F3	7894	20771	69853	7894	19089	-68685
	380C2F1	15788	42807	141084	15788	38506	-137480
	380C2F2	15788	42242	140444	15788	38360	-137427
	380C2F3	15788	41542	139707	15788	38177	-137369
	RTG	0	0	0	4968	11630	-41979

ZWW4HK400

Loadcases for tower strength (Special limit state)

Loadcase according to 50341-3-15	Att. Point	Ahead Vertical [N]	Ahead Transversal [N]	Ahead Longitudinal [N]	Back Vertical [N]	Back Transversal [N]	Back Longitudinal [N]
NL3/1a	GW / opgw	0	0	0	2313	5421	-19460
Wind, 10°C	150C1F1	0	0	0	8522	19719	-71422
Permanent loads yg= 1.2	150C1F2	0	0	0	8522	19671	-71415
Wind angle: 0°	150C1F3	0	0	0	8522	19611	-71408
	380C2F1	0	0	0	17045	39437	-142845
	380C2F2	0	0	0	17045	39342	-142830
	380C2F3	0	0	0	17045	39221	-142815
	RTG	0	0	0	4620	10674	-38843
NL3/1b	GW / opgw	0	0	0	2312	5963	-22016
Wind, -20°C	150C1F1	0	0	0	8518	22161	-82039
Permanent loads yg= 1.2	150C1F2	0	0	0	8518	22147	-82040
Wind angle: 0°	150C1F3	0	0	0	8518	22130	-82043
	380C2F1	0	0	0	17036	44322	-164077
	380C2F2	0	0	0	17036	44295	-164081
	380C2F3	0	0	0	17036	44260	-164085
	RTG	0	0	0	4618	11771	-43625
NL3/3	GW / opgw	0	0	0	3883	8610	-30911
Wind, -5°C	150C1F1	0	0	0	9901	23444	-85630
Permanent loads yg= 1.2	150C1F2	0	0	0	9901	23404	-85628
Wind angle: 0°	150C1F3	0	0	0	9901	23354	-85627
	380C2F1	0	0	0	19802	46887	-171259
	380C2F2	0	0	0	19802	46808	-171256
	380C2F3	0	0	0	19802	46707	-171253
	RTG	0	0	0	7767	16943	-61667
NL3/4	GW / opgw	0	0	0	2915	6463	-23882
Construction/maintenance, +5°C	150C1F1	0	0	0	9725	21883	-81000
Permanent loads yg= 1.2	150C1F2	0	0	0	9725	21869	-81002
Wind angle: 0°	150C1F3	0	0	0	9725	21852	-81005
	380C2F1	0	0	0	19451	43765	-162000
	380C2F2	0	0	0	19451	43738	-162004
	380C2F3	0	0	0	19451	43704	-162010
	RTG	0	0	0	5823	12862	-47696
NL3/1a	GW / opgw	0	0	0	2314	8980	-24860
Wind, 10°C	150C1F1	0	0	0	8524	28843	-83359
Permanent loads yg= 1.2	150C1F2	0	0	0	8524	27877	-81663
Wind angle: 45°	150C1F3	0	0	0	8524	26679	-79631
	380C2F1	0	0	0	17048	57685	-166717
	380C2F2	0	0	0	17048	55754	-163327
	380C2F3	0	0	0	17047	53358	-159262
	RTG	0	0	0	4621	14690	-43701
NL3/1b	GW / opgw	0	0	0	2312	6761	-22572
Wind, -20°C	150C1F1	0	0	0	8518	24266	-83095
Permanent loads yg= 1.2	150C1F2	0	0	0	8518	24058	-82907
Wind angle: 45°	150C1F3	0	0	0	8518	23800	-82693
	380C2F1	0	0	0	17036	48532	-166189
	380C2F2	0	0	0	17036	48117	-165814
	380C2F3	0	0	0	17036	47600	-165386
	RTG	0	0	0	4618	12712	-44021
NL3/3	GW / opgw	0	0	0	3884	13833	-37952
Wind, -5°C	150C1F1	0	0	0	9902	30568	-93216
Permanent loads yg= 1.2	150C1F2	0	0	0	9902	29821	-92068
Wind angle: 45°	150C1F3	0	0	0	9902	28897	-90716
	380C2F1	0	0	0	19805	61135	-186431
	380C2F2	0	0	0	19805	59641	-184137
	380C2F3	0	0	0	19804	57794	-181432
	RTG	0	0	0	7768	22876	-67855
NL3/4	GW / opgw	0	0	0	2915	7208	-24240
Construction/maintenance, +5°C	150C1F1	0	0	0	9726	23915	-81781
Permanent loads yg= 1.2	150C1F2	0	0	0	9725	23718	-81634
Wind angle: 45°	150C1F3	0	0	0	9725	23473	-81468
	380C2F1	0	0	0	19451	47830	-163562
	380C2F2	0	0	0	19451	47436	-163268
	380C2F3	0	0	0	19451	46945	-162935
	RTG	0	0	0	5823	13758	-47923
NL3/1a	GW / opgw	0	0	0	2314	10178	-27217
Wind, 10°C	150C1F1	0	0	0	8525	31968	-89093
Permanent loads yg= 1.2	150C1F2	0	0	0	8525	30695	-86719
Wind angle: 90°	150C1F3	0	0	0	8524	29109	-83834
	380C2F1	0	0	0	17050	63935	-178185
	380C2F2	0	0	0	17049	61390	-173439
	380C2F3	0	0	0	17048	58219	-167668
	RTG	0	0	0	4621	16077	-46164

NL3/1b	GW / opgw	0	0	0	2312	7025	-22909
Wind, -20°C	150C1F1	0	0	0	8518	24939	-83786
Permanent loads yg= 1.2	150C1F2	0	0	0	8518	24664	-83489
Wind angle: 90°	150C1F3	0	0	0	8518	24323	-83149
	380C2F1	0	0	0	17036	49879	-167572
	380C2F2	0	0	0	17036	49328	-166979
	380C2F3	0	0	0	17036	48646	-166297
	RTG	0	0	0	4618	13008	-44292
NL3/3	GW / opgw	0	0	0	3885	15569	-41090
Wind, -5°C	150C1F1	0	0	0	9903	33002	-97207
Permanent loads yg= 1.2	150C1F2	0	0	0	9903	32007	-95535
Wind angle: 90°	150C1F3	0	0	0	9903	30774	-93540
	380C2F1	0	0	0	19806	66003	-194414
	380C2F2	0	0	0	19806	64014	-191070
	380C2F3	0	0	0	19805	61548	-187080
	RTG	0	0	0	7769	24883	-71068
NL3/4	GW / opgw	0	0	0	2915	7446	-24476
Construction/maintenance, +5°C	150C1F1	0	0	0	9726	24550	-82329
Permanent loads yg= 1.2	150C1F2	0	0	0	9726	24291	-82093
Wind angle: 90°	150C1F3	0	0	0	9726	23969	-81824
	380C2F1	0	0	0	19451	49100	-164657
	380C2F2	0	0	0	19451	48582	-164186
	380C2F3	0	0	0	19451	47938	-163647
	RTG	0	0	0	5823	14030	-48105
NL3/1a	GW / opgw	0	0	0	2313	6149	-20066
Wind, 10°C	150C1F1	0	0	0	8523	21624	-72609
Permanent loads yg= 1.2	150C1F2	0	0	0	8523	21397	-72397
Wind angle: -45°	150C1F3	0	0	0	8523	21115	-72156
	380C2F1	0	0	0	17045	43248	-145217
	380C2F2	0	0	0	17045	42794	-144795
	380C2F3	0	0	0	17045	42229	-144312
	RTG	0	0	0	4620	11522	-39293
NL3/1b	GW / opgw	0	0	0	2312	6146	-22050
Wind, -20°C	150C1F1	0	0	0	8518	22659	-82076
Permanent loads yg= 1.2	150C1F2	0	0	0	8518	22603	-82063
Wind angle: -45°	150C1F3	0	0	0	8518	22533	-82050
	380C2F1	0	0	0	17036	45318	-164152
	380C2F2	0	0	0	17036	45207	-164127
	380C2F3	0	0	0	17036	45066	-164100
	RTG	0	0	0	4618	11997	-43633
NL3/3	GW / opgw	0	0	0	3883	9707	-31669
Wind, -5°C	150C1F1	0	0	0	9901	24983	-86283
Permanent loads yg= 1.2	150C1F2	0	0	0	9901	24803	-86159
Wind angle: -45°	150C1F3	0	0	0	9901	24579	-86020
	380C2F1	0	0	0	19803	49966	-172566
	380C2F2	0	0	0	19803	49606	-172319
	380C2F3	0	0	0	19803	49157	-172039
	RTG	0	0	0	7767	18232	-62203
NL3/4	GW / opgw	0	0	0	2915	6640	-23894
Construction/maintenance, +5°C	150C1F1	0	0	0	9725	22373	-81008
Permanent loads yg= 1.2	150C1F2	0	0	0	9725	22319	-81000
Wind angle: -45°	150C1F3	0	0	0	9725	22250	-80992
	380C2F1	0	0	0	19451	44747	-162016
	380C2F2	0	0	0	19451	44637	-162000
	380C2F3	0	0	0	19451	44499	-161985
	RTG	0	0	0	5823	13083	-47686
NL3/1a	GW / opgw	0	0	0	1735	4318	-15341
Wind, 10°C	150C1F1	0	0	0	6390	15727	-56526
Permanent loads yg= 0.9	150C1F2	0	0	0	6390	15677	-56510
Wind angle: 0°	150C1F3	0	0	0	6390	15614	-56493
	380C2F1	0	0	0	12781	31454	-113052
	380C2F2	0	0	0	12781	31354	-113020
	380C2F3	0	0	0	12781	31229	-112987
	RTG	0	0	0	3464	8457	-30569
NL3/1b	GW / opgw	0	0	0	1734	4791	-17643
Wind, -20°C	150C1F1	0	0	0	6387	17949	-66319
Permanent loads yg= 0.9	150C1F2	0	0	0	6387	17935	-66319
Wind angle: 0°	150C1F3	0	0	0	6387	17917	-66321
	380C2F1	0	0	0	12774	35897	-132637
	380C2F2	0	0	0	12774	35870	-132639
	380C2F3	0	0	0	12774	35835	-132641
	RTG	0	0	0	3463	9430	-34888

NL3/3	GW / opgw	0	0	0	3304	7647	-27318
Wind, -5°C	150C1F1	0	0	0	7769	19534	-71039
Permanent loads yg= 0.9	150C1F2	0	0	0	7769	19493	-71033
Wind angle: 0°	150C1F3	0	0	0	7769	19441	-71027
	380C2F1	0	0	0	15538	39068	-142079
	380C2F2	0	0	0	15538	38986	-142066
	380C2F3	0	0	0	15538	38883	-142054
	RTG	0	0	0	6610	15011	-54458
NL3/4	GW / opgw	0	0	0	2336	5417	-19980
Construction/maintenance, +5°C	150C1F1	0	0	0	7593	18004	-66526
Permanent loads yg= 0.9	150C1F2	0	0	0	7593	17991	-66527
Wind angle: 0°	150C1F3	0	0	0	7593	17973	-66529
	380C2F1	0	0	0	15186	36009	-133052
	380C2F2	0	0	0	15186	35981	-133054
	380C2F3	0	0	0	15186	35946	-133059
	RTG	0	0	0	4667	10769	-39885
NL3/1a	GW / opgw	0	0	0	1735	8312	-22368
Wind, 10°C	150C1F1	0	0	0	6392	26006	-72777
Permanent loads yg= 0.9	150C1F2	0	0	0	6392	24920	-70632
Wind angle: 45°	150C1F3	0	0	0	6392	23565	-68013
	380C2F1	0	0	0	12784	52013	-145554
	380C2F2	0	0	0	12784	49840	-141264
	380C2F3	0	0	0	12783	47130	-136026
	RTG	0	0	0	3465	12977	-37311
NL3/1b	GW / opgw	0	0	0	1734	5671	-18504
Wind, -20°C	150C1F1	0	0	0	6387	20232	-68043
Permanent loads yg= 0.9	150C1F2	0	0	0	6387	19999	-67759
Wind angle: 45°	150C1F3	0	0	0	6387	19710	-67430
	380C2F1	0	0	0	12774	40465	-136087
	380C2F2	0	0	0	12774	39998	-135518
	380C2F3	0	0	0	12774	39420	-134861
	RTG	0	0	0	3463	10442	-35549
NL3/3	GW / opgw	0	0	0	3305	13212	-35636
Wind, -5°C	150C1F1	0	0	0	7771	27388	-81353
Permanent loads yg= 0.9	150C1F2	0	0	0	7770	26553	-79875
Wind angle: 45°	150C1F3	0	0	0	7770	25518	-78108
	380C2F1	0	0	0	15541	54776	-162707
	380C2F2	0	0	0	15541	53105	-159750
	380C2F3	0	0	0	15540	51036	-156216
	RTG	0	0	0	6611	21321	-62052
NL3/4	GW / opgw	0	0	0	2336	6206	-20501
Construction/maintenance, +5°C	150C1F1	0	0	0	7593	20156	-67755
Permanent loads yg= 0.9	150C1F2	0	0	0	7593	19942	-67542
Wind angle: 45°	150C1F3	0	0	0	7593	19676	-67299
	380C2F1	0	0	0	15186	40313	-135511
	380C2F2	0	0	0	15186	39884	-135085
	380C2F3	0	0	0	15186	39352	-134597
	RTG	0	0	0	4667	11702	-40251
NL3/1a	GW / opgw	0	0	0	1736	9613	-25111
Wind, 10°C	150C1F1	0	0	0	6393	29481	-79817
Permanent loads yg= 0.9	150C1F2	0	0	0	6393	28073	-76939
Wind angle: 90°	150C1F3	0	0	0	6392	26305	-73373
	380C2F1	0	0	0	12786	58962	-159635
	380C2F2	0	0	0	12785	56147	-153879
	380C2F3	0	0	0	12784	52610	-146746
	RTG	0	0	0	3465	14539	-40424
NL3/1b	GW / opgw	0	0	0	1734	5974	-18987
Wind, -20°C	150C1F1	0	0	0	6387	20997	-69074
Permanent loads yg= 0.9	150C1F2	0	0	0	6387	20683	-68635
Wind angle: 90°	150C1F3	0	0	0	6387	20297	-68125
	380C2F1	0	0	0	12774	41993	-138148
	380C2F2	0	0	0	12774	41367	-137270
	380C2F3	0	0	0	12774	40594	-136250
	RTG	0	0	0	3463	10775	-35958
NL3/3	GW / opgw	0	0	0	3306	15037	-39110
Wind, -5°C	150C1F1	0	0	0	7771	30099	-86377
Permanent loads yg= 0.9	150C1F2	0	0	0	7771	28994	-84294
Wind angle: 90°	150C1F3	0	0	0	7771	27619	-81769
	380C2F1	0	0	0	15542	60198	-172755
	380C2F2	0	0	0	15542	57987	-168588
	380C2F3	0	0	0	15541	55238	-163537
	RTG	0	0	0	6612	23468	-65790

NL3/4	GW / opgw	0	0	0	2336	6466	-20820
Construction/maintenance, +5°C	150C1F1	0	0	0	7593	20854	-68536
Permanent loads yg= 0.9	150C1F2	0	0	0	7593	20569	-68202
Wind angle: 90°	150C1F3	0	0	0	7593	20216	-67817
	380C2F1	0	0	0	15187	41708	-137072
	380C2F2	0	0	0	15187	41137	-136404
	380C2F3	0	0	0	15186	40431	-135633
	RTG	0	0	0	4667	11994	-40507
NL3/1a	GW / opgw	0	0	0	1735	5126	-16245
Wind, 10°C	150C1F1	0	0	0	6391	17810	-58375
Permanent loads yg= 0.9	150C1F2	0	0	0	6391	17555	-58061
Wind angle: -45°	150C1F3	0	0	0	6391	17240	-57698
	380C2F1	0	0	0	12781	35619	-116750
	380C2F2	0	0	0	12781	35110	-116122
	380C2F3	0	0	0	12781	34481	-115397
	RTG	0	0	0	3464	9375	-31283
NL3/1b	GW / opgw	0	0	0	1734	4983	-17711
Wind, -20°C	150C1F1	0	0	0	6387	18466	-66429
Permanent loads yg= 0.9	150C1F2	0	0	0	6387	18407	-66405
Wind angle: -45°	150C1F3	0	0	0	6387	18333	-66378
	380C2F1	0	0	0	12774	36933	-132858
	380C2F2	0	0	0	12774	36815	-132809
	380C2F3	0	0	0	12774	36666	-132755
	RTG	0	0	0	3463	9663	-34924
NL3/3	GW / opgw	0	0	0	3304	8802	-28293
Wind, -5°C	150C1F1	0	0	0	7769	21169	-72052
Permanent loads yg= 0.9	150C1F2	0	0	0	7769	20974	-71871
Wind angle: -45°	150C1F3	0	0	0	7769	20732	-71665
	380C2F1	0	0	0	15539	42338	-144103
	380C2F2	0	0	0	15539	41948	-143742
	380C2F3	0	0	0	15539	41464	-143329
	RTG	0	0	0	6610	16350	-55181
NL3/4	GW / opgw	0	0	0	2336	5599	-20009
Construction/maintenance, +5°C	150C1F1	0	0	0	7593	18508	-66582
Permanent loads yg= 0.9	150C1F2	0	0	0	7593	18451	-66566
Wind angle: -45°	150C1F3	0	0	0	7593	18380	-66549
	380C2F1	0	0	0	15186	37015	-133164
	380C2F2	0	0	0	15186	36902	-133132
	380C2F3	0	0	0	15186	36759	-133099
	RTG	0	0	0	4667	10994	-39889

ZWW4HK400

Loadcases for tower strength (Special limit state)

		Ahead			Back		
Loadcase according to 50341-3-15	Att. Point	Vertical [N]	Transversal [N]	Longitudinal [N]	Vertical [N]	Transversal [N]	Longitudinal [N]
NL3/1a	GW / opgw	2313	5421	19460	0	0	0
Wind, 10°C	150C1F1	8522	19719	71422	0	0	0
Permanent loads yg= 1.2	150C1F2	8522	19671	71415	0	0	0
Wind angle: 0°	150C1F3	8522	19611	71408	0	0	0
	380C2F1	17045	39437	142845	0	0	0
	380C2F2	17045	39342	142830	0	0	0
	380C2F3	17045	39221	142815	0	0	0
	RTG	0	0	0	0	0	0
NL3/1b	GW / opgw	2312	5963	22016	0	0	0
Wind, -20°C	150C1F1	8518	22161	82039	0	0	0
Permanent loads yg= 1.2	150C1F2	8518	22147	82040	0	0	0
Wind angle: 0°	150C1F3	8518	22130	82043	0	0	0
	380C2F1	17036	44322	164077	0	0	0
	380C2F2	17036	44295	164081	0	0	0
	380C2F3	17036	44260	164085	0	0	0
	RTG	0	0	0	0	0	0
NL3/3	GW / opgw	3883	8610	30911	0	0	0
Wind, -5°C	150C1F1	9901	23444	85630	0	0	0
Permanent loads yg= 1.2	150C1F2	9901	23404	85628	0	0	0
Wind angle: 0°	150C1F3	9901	23354	85627	0	0	0
	380C2F1	19802	46887	171259	0	0	0
	380C2F2	19802	46808	171256	0	0	0
	380C2F3	19802	46707	171253	0	0	0
	RTG	0	0	0	0	0	0
NL3/4	GW / opgw	2915	6463	23882	0	0	0
Construction/maintenance, +5°C	150C1F1	9725	21883	81000	0	0	0
Permanent loads yg= 1.2	150C1F2	9725	21869	81002	0	0	0
Wind angle: 0°	150C1F3	9725	21852	81005	0	0	0
	380C2F1	19451	43765	162000	0	0	0
	380C2F2	19451	43738	162004	0	0	0
	380C2F3	19451	43704	162010	0	0	0
	RTG	0	0	0	0	0	0
NL3/1a	GW / opgw	2313	6149	20066	0	0	0
Wind, 10°C	150C1F1	8523	21624	72609	0	0	0
Permanent loads yg= 1.2	150C1F2	8523	21397	72397	0	0	0
Wind angle: 45°	150C1F3	8523	21115	72156	0	0	0
	380C2F1	17045	43248	145217	0	0	0
	380C2F2	17045	42794	144795	0	0	0
	380C2F3	17045	42229	144312	0	0	0
	RTG	0	0	0	0	0	0
NL3/1b	GW / opgw	2312	6146	22050	0	0	0
Wind, -20°C	150C1F1	8518	22659	82076	0	0	0
Permanent loads yg= 1.2	150C1F2	8518	22603	82063	0	0	0
Wind angle: 45°	150C1F3	8518	22533	82050	0	0	0
	380C2F1	17036	45318	164152	0	0	0
	380C2F2	17036	45207	164127	0	0	0
	380C2F3	17036	45066	164100	0	0	0
	RTG	0	0	0	0	0	0
NL3/3	GW / opgw	3883	9707	31669	0	0	0
Wind, -5°C	150C1F1	9901	24983	86283	0	0	0
Permanent loads yg= 1.2	150C1F2	9901	24803	86159	0	0	0
Wind angle: 45°	150C1F3	9901	24579	86020	0	0	0
	380C2F1	19803	49966	172566	0	0	0
	380C2F2	19803	49606	172319	0	0	0
	380C2F3	19803	49157	172039	0	0	0
	RTG	0	0	0	0	0	0
NL3/4	GW / opgw	2915	6640	23894	0	0	0
Construction/maintenance, +5°C	150C1F1	9725	22373	81008	0	0	0
Permanent loads yg= 1.2	150C1F2	9725	22319	81000	0	0	0
Wind angle: 45°	150C1F3	9725	22250	80992	0	0	0
	380C2F1	19451	44747	162016	0	0	0
	380C2F2	19451	44637	162000	0	0	0
	380C2F3	19451	44499	161985	0	0	0
	RTG	0	0	0	0	0	0
NL3/1a	GW / opgw	2314	10178	27217	0	0	0
Wind, 10°C	150C1F1	8525	31968	89093	0	0	0
Permanent loads yg= 1.2	150C1F2	8525	30695	86719	0	0	0
Wind angle: 90°	150C1F3	8524	29109	83834	0	0	0
	380C2F1	17050	63935	178185	0	0	0
	380C2F2	17049	61390	173439	0	0	0
	380C2F3	17048	58219	167668	0	0	0
	RTG	0	0	0	0	0	0

NL3/1b	GW / opgw	2312	7025	22909	0	0	0
Wind, -20°C	150C1F1	8518	24939	83786	0	0	0
Permanent loads yg= 1.2	150C1F2	8518	24664	83489	0	0	0
Wind angle: 90°	150C1F3	8518	24323	83149	0	0	0
	380C2F1	17036	49879	167572	0	0	0
	380C2F2	17036	49328	166979	0	0	0
	380C2F3	17036	48646	166297	0	0	0
	RTG	0	0	0	0	0	0
NL3/3	GW / opgw	3885	15569	41090	0	0	0
Wind, -5°C	150C1F1	9903	33002	97207	0	0	0
Permanent loads yg= 1.2	150C1F2	9903	32007	95535	0	0	0
Wind angle: 90°	150C1F3	9903	30774	93540	0	0	0
	380C2F1	19806	66003	194414	0	0	0
	380C2F2	19806	64014	191070	0	0	0
	380C2F3	19805	61548	187080	0	0	0
	RTG	0	0	0	0	0	0
NL3/4	GW / opgw	2915	7446	24476	0	0	0
Construction/maintenance, +5°C	150C1F1	9726	24550	82329	0	0	0
Permanent loads yg= 1.2	150C1F2	9726	24291	82093	0	0	0
Wind angle: 90°	150C1F3	9726	23969	81824	0	0	0
	380C2F1	19451	49100	164657	0	0	0
	380C2F2	19451	48582	164186	0	0	0
	380C2F3	19451	47938	163647	0	0	0
	RTG	0	0	0	0	0	0
NL3/1a	GW / opgw	2314	8980	24860	0	0	0
Wind, 10°C	150C1F1	8524	28843	83359	0	0	0
Permanent loads yg= 1.2	150C1F2	8524	27877	81663	0	0	0
Wind angle: -45°	150C1F3	8524	26679	79631	0	0	0
	380C2F1	17048	57685	166717	0	0	0
	380C2F2	17048	55754	163327	0	0	0
	380C2F3	17047	53358	159262	0	0	0
	RTG	0	0	0	0	0	0
NL3/1b	GW / opgw	2312	6761	22572	0	0	0
Wind, -20°C	150C1F1	8518	24266	83095	0	0	0
Permanent loads yg= 1.2	150C1F2	8518	24058	82907	0	0	0
Wind angle: -45°	150C1F3	8518	23800	82693	0	0	0
	380C2F1	17036	48532	166189	0	0	0
	380C2F2	17036	48117	165814	0	0	0
	380C2F3	17036	47600	165386	0	0	0
	RTG	0	0	0	0	0	0
NL3/3	GW / opgw	3884	13833	37952	0	0	0
Wind, -5°C	150C1F1	9902	30568	93216	0	0	0
Permanent loads yg= 1.2	150C1F2	9902	29821	92068	0	0	0
Wind angle: -45°	150C1F3	9902	28897	90716	0	0	0
	380C2F1	19805	61135	186431	0	0	0
	380C2F2	19805	59641	184137	0	0	0
	380C2F3	19804	57794	181432	0	0	0
	RTG	0	0	0	0	0	0
NL3/4	GW / opgw	2915	7208	24240	0	0	0
Construction/maintenance, +5°C	150C1F1	9726	23915	81781	0	0	0
Permanent loads yg= 1.2	150C1F2	9725	23718	81634	0	0	0
Wind angle: -45°	150C1F3	9725	23473	81468	0	0	0
	380C2F1	19451	47830	163562	0	0	0
	380C2F2	19451	47436	163268	0	0	0
	380C2F3	19451	46945	162935	0	0	0
	RTG	0	0	0	0	0	0
NL3/1a	GW / opgw	1735	4318	15341	0	0	0
Wind, 10°C	150C1F1	6390	15727	56526	0	0	0
Permanent loads yg= 0.9	150C1F2	6390	15677	56510	0	0	0
Wind angle: 0°	150C1F3	6390	15614	56493	0	0	0
	380C2F1	12781	31454	113052	0	0	0
	380C2F2	12781	31354	113020	0	0	0
	380C2F3	12781	31229	112987	0	0	0
	RTG	0	0	0	0	0	0
NL3/1b	GW / opgw	1734	4791	17643	0	0	0
Wind, -20°C	150C1F1	6387	17949	66319	0	0	0
Permanent loads yg= 0.9	150C1F2	6387	17935	66319	0	0	0
Wind angle: 0°	150C1F3	6387	17917	66321	0	0	0
	380C2F1	12774	35897	132637	0	0	0
	380C2F2	12774	35870	132639	0	0	0
	380C2F3	12774	35835	132641	0	0	0
	RTG	0	0	0	0	0	0

NL3/3	GW / opgw	3304	7647	27318	0	0	0
Wind, -5°C	150C1F1	7769	19534	71039	0	0	0
Permanent loads yg= 0.9	150C1F2	7769	19493	71033	0	0	0
Wind angle: 0°	150C1F3	7769	19441	71027	0	0	0
	380C2F1	15538	39068	142079	0	0	0
	380C2F2	15538	38986	142066	0	0	0
	380C2F3	15538	38883	142054	0	0	0
	RTG	0	0	0	0	0	0
NL3/4	GW / opgw	2336	5417	19980	0	0	0
Construction/maintenance, +5°C	150C1F1	7593	18004	66526	0	0	0
Permanent loads yg= 0.9	150C1F2	7593	17991	66527	0	0	0
Wind angle: 0°	150C1F3	7593	17973	66529	0	0	0
	380C2F1	15186	36009	133052	0	0	0
	380C2F2	15186	35981	133054	0	0	0
	380C2F3	15186	35946	133059	0	0	0
	RTG	0	0	0	0	0	0
NL3/1a	GW / opgw	1735	5126	16245	0	0	0
Wind, 10°C	150C1F1	6391	17810	58375	0	0	0
Permanent loads yg= 0.9	150C1F2	6391	17555	58061	0	0	0
Wind angle: 45°	150C1F3	6391	17240	57698	0	0	0
	380C2F1	12781	35619	116750	0	0	0
	380C2F2	12781	35110	116122	0	0	0
	380C2F3	12781	34481	115397	0	0	0
	RTG	0	0	0	0	0	0
NL3/1b	GW / opgw	1734	4983	17711	0	0	0
Wind, -20°C	150C1F1	6387	18466	66429	0	0	0
Permanent loads yg= 0.9	150C1F2	6387	18407	66405	0	0	0
Wind angle: 45°	150C1F3	6387	18333	66378	0	0	0
	380C2F1	12774	36933	132858	0	0	0
	380C2F2	12774	36815	132809	0	0	0
	380C2F3	12774	36666	132755	0	0	0
	RTG	0	0	0	0	0	0
NL3/3	GW / opgw	3304	8802	28293	0	0	0
Wind, -5°C	150C1F1	7769	21169	72052	0	0	0
Permanent loads yg= 0.9	150C1F2	7769	20974	71871	0	0	0
Wind angle: 45°	150C1F3	7769	20732	71665	0	0	0
	380C2F1	15539	42338	144103	0	0	0
	380C2F2	15539	41948	143742	0	0	0
	380C2F3	15539	41464	143329	0	0	0
	RTG	0	0	0	0	0	0
NL3/4	GW / opgw	2336	5599	20009	0	0	0
Construction/maintenance, +5°C	150C1F1	7593	18508	66582	0	0	0
Permanent loads yg= 0.9	150C1F2	7593	18451	66566	0	0	0
Wind angle: 45°	150C1F3	7593	18380	66549	0	0	0
	380C2F1	15186	37015	133164	0	0	0
	380C2F2	15186	36902	133132	0	0	0
	380C2F3	15186	36759	133099	0	0	0
	RTG	0	0	0	0	0	0
NL3/1a	GW / opgw	1736	9613	25111	0	0	0
Wind, 10°C	150C1F1	6393	29481	79817	0	0	0
Permanent loads yg= 0.9	150C1F2	6393	28073	76939	0	0	0
Wind angle: 90°	150C1F3	6392	26305	73373	0	0	0
	380C2F1	12786	58962	159635	0	0	0
	380C2F2	12785	56147	153879	0	0	0
	380C2F3	12784	52610	146746	0	0	0
	RTG	0	0	0	0	0	0
NL3/1b	GW / opgw	1734	5974	18987	0	0	0
Wind, -20°C	150C1F1	6387	20997	69074	0	0	0
Permanent loads yg= 0.9	150C1F2	6387	20683	68635	0	0	0
Wind angle: 90°	150C1F3	6387	20297	68125	0	0	0
	380C2F1	12774	41993	138148	0	0	0
	380C2F2	12774	41367	137270	0	0	0
	380C2F3	12774	40594	136250	0	0	0
	RTG	0	0	0	0	0	0
NL3/3	GW / opgw	3306	15037	39110	0	0	0
Wind, -5°C	150C1F1	7771	30099	86377	0	0	0
Permanent loads yg= 0.9	150C1F2	7771	28994	84294	0	0	0
Wind angle: 90°	150C1F3	7771	27619	81769	0	0	0
	380C2F1	15542	60198	172755	0	0	0
	380C2F2	15542	57987	168588	0	0	0
	380C2F3	15541	55238	163537	0	0	0
	RTG	0	0	0	0	0	0

NL3/4	GW / opgw	2336	6466	20820	0	0	0
Construction/maintenance, +5°C	150C1F1	7593	20854	68536	0	0	0
Permanent loads yg= 0.9	150C1F2	7593	20569	68202	0	0	0
Wind angle: 90°	150C1F3	7593	20216	67817	0	0	0
	380C2F1	15187	41708	137072	0	0	0
	380C2F2	15187	41137	136404	0	0	0
	380C2F3	15186	40431	135633	0	0	0
	RTG	0	0	0	0	0	0
NL3/1a	GW / opgw	1735	8312	22368	0	0	0
Wind, 10°C	150C1F1	6392	26006	72777	0	0	0
Permanent loads yg= 0.9	150C1F2	6392	24920	70632	0	0	0
Wind angle: -45°	150C1F3	6392	23565	68013	0	0	0
	380C2F1	12784	52013	145554	0	0	0
	380C2F2	12784	49840	141264	0	0	0
	380C2F3	12783	47130	136026	0	0	0
	RTG	0	0	0	0	0	0
NL3/1b	GW / opgw	1734	5671	18504	0	0	0
Wind, -20°C	150C1F1	6387	20232	68043	0	0	0
Permanent loads yg= 0.9	150C1F2	6387	19999	67759	0	0	0
Wind angle: -45°	150C1F3	6387	19710	67430	0	0	0
	380C2F1	12774	40465	136087	0	0	0
	380C2F2	12774	39998	135518	0	0	0
	380C2F3	12774	39420	134861	0	0	0
	RTG	0	0	0	0	0	0
NL3/3	GW / opgw	3305	13212	35636	0	0	0
Wind, -5°C	150C1F1	7771	27388	81353	0	0	0
Permanent loads yg= 0.9	150C1F2	7770	26553	79875	0	0	0
Wind angle: -45°	150C1F3	7770	25518	78108	0	0	0
	380C2F1	15541	54776	162707	0	0	0
	380C2F2	15541	53105	159750	0	0	0
	380C2F3	15540	51036	156216	0	0	0
	RTG	0	0	0	0	0	0
NL3/4	GW / opgw	2336	6206	20501	0	0	0
Construction/maintenance, +5°C	150C1F1	7593	20156	67755	0	0	0
Permanent loads yg= 0.9	150C1F2	7593	19942	67542	0	0	0
Wind angle: -45°	150C1F3	7593	19676	67299	0	0	0
	380C2F1	15186	40313	135511	0	0	0
	380C2F2	15186	39884	135085	0	0	0
	380C2F3	15186	39352	134597	0	0	0
	RTG	0	0	0	0	0	0

ZWW4HK400

Loadcases for tower strength (Special limit state)

		Ahead			Back		
Loadcase according to 50341-3-15	Att. Point	Vertical [N]	Transversal [N]	Longitudinal [N]	Vertical [N]	Transversal [N]	Longitudinal [N]
NL3/1a	GW / opgw	2313	5421	19460	2313	5421	-19460
Wind, 10°C	150C1F1	8522	19719	71422	8522	19719	-71422
Permanent loads yg= 1.2	150C1F2	8522	19671	71415	8522	19671	-71415
Wind angle: 0°	150C1F3	8522	19611	71408	8522	19611	-71408
	380C2F1	0	0	0	0	0	0
	380C2F2	0	0	0	0	0	0
	380C2F3	0	0	0	0	0	0
	RTG	0	0	0	0	0	0
NL3/1b	GW / opgw	2312	5963	22016	2312	5963	-22016
Wind, -20°C	150C1F1	8518	22161	82039	8518	22161	-82039
Permanent loads yg= 1.2	150C1F2	8518	22147	82040	8518	22147	-82040
Wind angle: 0°	150C1F3	8518	22130	82043	8518	22130	-82043
	380C2F1	0	0	0	0	0	0
	380C2F2	0	0	0	0	0	0
	380C2F3	0	0	0	0	0	0
	RTG	0	0	0	0	0	0
NL3/3	GW / opgw	3883	8610	30911	3883	8610	-30911
Wind, -5°C	150C1F1	9901	23444	85630	9901	23444	-85630
Permanent loads yg= 1.2	150C1F2	9901	23404	85628	9901	23404	-85628
Wind angle: 0°	150C1F3	9901	23354	85627	9901	23354	-85627
	380C2F1	0	0	0	0	0	0
	380C2F2	0	0	0	0	0	0
	380C2F3	0	0	0	0	0	0
	RTG	0	0	0	0	0	0
NL3/4	GW / opgw	2915	6463	23882	2915	6463	-23882
Construction/maintenance, +5°C	150C1F1	9725	21883	81000	9725	21883	-81000
Permanent loads yg= 1.2	150C1F2	9725	21869	81002	9725	21869	-81002
Wind angle: 0°	150C1F3	9725	21852	81005	9725	21852	-81005
	380C2F1	0	0	0	0	0	0
	380C2F2	0	0	0	0	0	0
	380C2F3	0	0	0	0	0	0
	RTG	0	0	0	0	0	0
NL3/1a	GW / opgw	2313	6149	20066	2314	8980	-24860
Wind, 10°C	150C1F1	8523	21624	72609	8524	28843	-83359
Permanent loads yg= 1.2	150C1F2	8523	21397	72397	8524	27877	-81663
Wind angle: 45°	150C1F3	8523	21115	72156	8524	26679	-79631
	380C2F1	0	0	0	0	0	0
	380C2F2	0	0	0	0	0	0
	380C2F3	0	0	0	0	0	0
	RTG	0	0	0	0	0	0
NL3/1b	GW / opgw	2312	6146	22050	2312	6761	-22572
Wind, -20°C	150C1F1	8518	22659	82076	8518	24266	-83095
Permanent loads yg= 1.2	150C1F2	8518	22603	82063	8518	24058	-82907
Wind angle: 45°	150C1F3	8518	22533	82050	8518	23800	-82693
	380C2F1	0	0	0	0	0	0
	380C2F2	0	0	0	0	0	0
	380C2F3	0	0	0	0	0	0
	RTG	0	0	0	0	0	0
NL3/3	GW / opgw	3883	9707	31669	3884	13833	-37952
Wind, -5°C	150C1F1	9901	24983	86283	9902	30568	-93216
Permanent loads yg= 1.2	150C1F2	9901	24803	86159	9902	29821	-92068
Wind angle: 45°	150C1F3	9901	24579	86020	9902	28897	-90716
	380C2F1	0	0	0	0	0	0
	380C2F2	0	0	0	0	0	0
	380C2F3	0	0	0	0	0	0
	RTG	0	0	0	0	0	0
NL3/4	GW / opgw	2915	6640	23894	2915	7208	-24240
Construction/maintenance, +5°C	150C1F1	9725	22373	81008	9726	23915	-81781
Permanent loads yg= 1.2	150C1F2	9725	22319	81000	9725	23718	-81634
Wind angle: 45°	150C1F3	9725	22250	80992	9725	23473	-81468
	380C2F1	0	0	0	0	0	0
	380C2F2	0	0	0	0	0	0
	380C2F3	0	0	0	0	0	0
	RTG	0	0	0	0	0	0
NL3/1a	GW / opgw	2314	10178	27217	2314	10178	-27217
Wind, 10°C	150C1F1	8525	31968	89093	8525	31968	-89093
Permanent loads yg= 1.2	150C1F2	8525	30695	86719	8525	30695	-86719
Wind angle: 90°	150C1F3	8524	29109	83834	8524	29109	-83834
	380C2F1	0	0	0	0	0	0
	380C2F2	0	0	0	0	0	0
	380C2F3	0	0	0	0	0	0
	RTG	0	0	0	0	0	0

NL3/1b	GW / opgw	2312	7025	22909	2312	7025	-22909
Wind, -20°C	150C1F1	8518	24939	83786	8518	24939	-83786
Permanent loads yg= 1.2	150C1F2	8518	24664	83489	8518	24664	-83489
Wind angle: 90°	150C1F3	8518	24323	83149	8518	24323	-83149
	380C2F1	0	0	0	0	0	0
	380C2F2	0	0	0	0	0	0
	380C2F3	0	0	0	0	0	0
	RTG	0	0	0	0	0	0
NL3/3	GW / opgw	3885	15569	41090	3885	15569	-41090
Wind, -5°C	150C1F1	9903	33002	97207	9903	33002	-97207
Permanent loads yg= 1.2	150C1F2	9903	32007	95535	9903	32007	-95535
Wind angle: 90°	150C1F3	9903	30774	93540	9903	30774	-93540
	380C2F1	0	0	0	0	0	0
	380C2F2	0	0	0	0	0	0
	380C2F3	0	0	0	0	0	0
	RTG	0	0	0	0	0	0
NL3/4	GW / opgw	2915	7446	24476	2915	7446	-24476
Construction/maintenance, +5°C	150C1F1	9726	24550	82329	9726	24550	-82329
Permanent loads yg= 1.2	150C1F2	9726	24291	82093	9726	24291	-82093
Wind angle: 90°	150C1F3	9726	23969	81824	9726	23969	-81824
	380C2F1	0	0	0	0	0	0
	380C2F2	0	0	0	0	0	0
	380C2F3	0	0	0	0	0	0
	RTG	0	0	0	0	0	0
NL3/1a	GW / opgw	2314	8980	24860	2313	6149	-20066
Wind, 10°C	150C1F1	8524	28843	83359	8523	21624	-72609
Permanent loads yg= 1.2	150C1F2	8524	27877	81663	8523	21397	-72397
Wind angle: -45°	150C1F3	8524	26679	79631	8523	21115	-72156
	380C2F1	0	0	0	0	0	0
	380C2F2	0	0	0	0	0	0
	380C2F3	0	0	0	0	0	0
	RTG	0	0	0	0	0	0
NL3/1b	GW / opgw	2312	6761	22572	2312	6146	-22050
Wind, -20°C	150C1F1	8518	24266	83095	8518	22659	-82076
Permanent loads yg= 1.2	150C1F2	8518	24058	82907	8518	22603	-82063
Wind angle: -45°	150C1F3	8518	23800	82693	8518	22533	-82050
	380C2F1	0	0	0	0	0	0
	380C2F2	0	0	0	0	0	0
	380C2F3	0	0	0	0	0	0
	RTG	0	0	0	0	0	0
NL3/3	GW / opgw	3884	13833	37952	3883	9707	-31669
Wind, -5°C	150C1F1	9902	30568	93216	9901	24983	-86283
Permanent loads yg= 1.2	150C1F2	9902	29821	92068	9901	24803	-86159
Wind angle: -45°	150C1F3	9902	28897	90716	9901	24579	-86020
	380C2F1	0	0	0	0	0	0
	380C2F2	0	0	0	0	0	0
	380C2F3	0	0	0	0	0	0
	RTG	0	0	0	0	0	0
NL3/4	GW / opgw	2915	7208	24240	2915	6640	-23894
Construction/maintenance, +5°C	150C1F1	9726	23915	81781	9725	22373	-81008
Permanent loads yg= 1.2	150C1F2	9725	23718	81634	9725	22319	-81000
Wind angle: -45°	150C1F3	9725	23473	81468	9725	22250	-80992
	380C2F1	0	0	0	0	0	0
	380C2F2	0	0	0	0	0	0
	380C2F3	0	0	0	0	0	0
	RTG	0	0	0	0	0	0
NL3/1a	GW / opgw	1735	4318	15341	1735	4318	-15341
Wind, 10°C	150C1F1	6390	15727	56526	6390	15727	-56526
Permanent loads yg= 0.9	150C1F2	6390	15677	56510	6390	15677	-56510
Wind angle: 0°	150C1F3	6390	15614	56493	6390	15614	-56493
	380C2F1	0	0	0	0	0	0
	380C2F2	0	0	0	0	0	0
	380C2F3	0	0	0	0	0	0
	RTG	0	0	0	0	0	0
NL3/1b	GW / opgw	1734	4791	17643	1734	4791	-17643
Wind, -20°C	150C1F1	6387	17949	66319	6387	17949	-66319
Permanent loads yg= 0.9	150C1F2	6387	17935	66319	6387	17935	-66319
Wind angle: 0°	150C1F3	6387	17917	66321	6387	17917	-66321
	380C2F1	0	0	0	0	0	0
	380C2F2	0	0	0	0	0	0
	380C2F3	0	0	0	0	0	0
	RTG	0	0	0	0	0	0

NL3/3	GW / opgw	3304	7647	27318	3304	7647	-27318
Wind, -5°C	150C1F1	7769	19534	71039	7769	19534	-71039
Permanent loads yg= 0.9	150C1F2	7769	19493	71033	7769	19493	-71033
Wind angle: 0°	150C1F3	7769	19441	71027	7769	19441	-71027
	380C2F1	0	0	0	0	0	0
	380C2F2	0	0	0	0	0	0
	380C2F3	0	0	0	0	0	0
	RTG	0	0	0	0	0	0
NL3/4	GW / opgw	2336	5417	19980	2336	5417	-19980
Construction/maintenance, +5°C	150C1F1	7593	18004	66526	7593	18004	-66526
Permanent loads yg= 0.9	150C1F2	7593	17991	66527	7593	17991	-66527
Wind angle: 0°	150C1F3	7593	17973	66529	7593	17973	-66529
	380C2F1	0	0	0	0	0	0
	380C2F2	0	0	0	0	0	0
	380C2F3	0	0	0	0	0	0
	RTG	0	0	0	0	0	0
NL3/1a	GW / opgw	1735	5126	16245	1735	8312	-22368
Wind, 10°C	150C1F1	6391	17810	58375	6392	26006	-72777
Permanent loads yg= 0.9	150C1F2	6391	17555	58061	6392	24920	-70632
Wind angle: 45°	150C1F3	6391	17240	57698	6392	23565	-68013
	380C2F1	0	0	0	0	0	0
	380C2F2	0	0	0	0	0	0
	380C2F3	0	0	0	0	0	0
	RTG	0	0	0	0	0	0
NL3/1b	GW / opgw	1734	4983	17711	1734	5671	-18504
Wind, -20°C	150C1F1	6387	18466	66429	6387	20232	-68043
Permanent loads yg= 0.9	150C1F2	6387	18407	66405	6387	19999	-67759
Wind angle: 45°	150C1F3	6387	18333	66378	6387	19710	-67430
	380C2F1	0	0	0	0	0	0
	380C2F2	0	0	0	0	0	0
	380C2F3	0	0	0	0	0	0
	RTG	0	0	0	0	0	0
NL3/3	GW / opgw	3304	8802	28293	3305	13212	-35636
Wind, -5°C	150C1F1	7769	21169	72052	7771	27388	-81353
Permanent loads yg= 0.9	150C1F2	7769	20974	71871	7770	26553	-79875
Wind angle: 45°	150C1F3	7769	20732	71665	7770	25518	-78108
	380C2F1	0	0	0	0	0	0
	380C2F2	0	0	0	0	0	0
	380C2F3	0	0	0	0	0	0
	RTG	0	0	0	0	0	0
NL3/4	GW / opgw	2336	5599	20009	2336	6206	-20501
Construction/maintenance, +5°C	150C1F1	7593	18508	66582	7593	20156	-67755
Permanent loads yg= 0.9	150C1F2	7593	18451	66566	7593	19942	-67542
Wind angle: 45°	150C1F3	7593	18380	66549	7593	19676	-67299
	380C2F1	0	0	0	0	0	0
	380C2F2	0	0	0	0	0	0
	380C2F3	0	0	0	0	0	0
	RTG	0	0	0	0	0	0
NL3/1a	GW / opgw	1736	9613	25111	1736	9613	-25111
Wind, 10°C	150C1F1	6393	29481	79817	6393	29481	-79817
Permanent loads yg= 0.9	150C1F2	6393	28073	76939	6393	28073	-76939
Wind angle: 90°	150C1F3	6392	26305	73373	6392	26305	-73373
	380C2F1	0	0	0	0	0	0
	380C2F2	0	0	0	0	0	0
	380C2F3	0	0	0	0	0	0
	RTG	0	0	0	0	0	0
NL3/1b	GW / opgw	1734	5974	18987	1734	5974	-18987
Wind, -20°C	150C1F1	6387	20997	69074	6387	20997	-69074
Permanent loads yg= 0.9	150C1F2	6387	20683	68635	6387	20683	-68635
Wind angle: 90°	150C1F3	6387	20297	68125	6387	20297	-68125
	380C2F1	0	0	0	0	0	0
	380C2F2	0	0	0	0	0	0
	380C2F3	0	0	0	0	0	0
	RTG	0	0	0	0	0	0
NL3/3	GW / opgw	3306	15037	39110	3306	15037	-39110
Wind, -5°C	150C1F1	7771	30099	86377	7771	30099	-86377
Permanent loads yg= 0.9	150C1F2	7771	28994	84294	7771	28994	-84294
Wind angle: 90°	150C1F3	7771	27619	81769	7771	27619	-81769
	380C2F1	0	0	0	0	0	0
	380C2F2	0	0	0	0	0	0
	380C2F3	0	0	0	0	0	0
	RTG	0	0	0	0	0	0

NL3/4	GW / opgw	2336	6466	20820	2336	6466	-20820
Construction/maintenance, +5°C	150C1F1	7593	20854	68536	7593	20854	-68536
Permanent loads yg= 0.9	150C1F2	7593	20569	68202	7593	20569	-68202
Wind angle: 90°	150C1F3	7593	20216	67817	7593	20216	-67817
	380C2F1	0	0	0	0	0	0
	380C2F2	0	0	0	0	0	0
	380C2F3	0	0	0	0	0	0
	RTG	0	0	0	0	0	0
NL3/1a	GW / opgw	1735	8312	22368	1735	5126	-16245
Wind, 10°C	150C1F1	6392	26006	72777	6391	17810	-58375
Permanent loads yg= 0.9	150C1F2	6392	24920	70632	6391	17555	-58061
Wind angle: -45°	150C1F3	6392	23565	68013	6391	17240	-57698
	380C2F1	0	0	0	0	0	0
	380C2F2	0	0	0	0	0	0
	380C2F3	0	0	0	0	0	0
	RTG	0	0	0	0	0	0
NL3/1b	GW / opgw	1734	5671	18504	1734	4983	-17711
Wind, -20°C	150C1F1	6387	20232	68043	6387	18466	-66429
Permanent loads yg= 0.9	150C1F2	6387	19999	67759	6387	18407	-66405
Wind angle: -45°	150C1F3	6387	19710	67430	6387	18333	-66378
	380C2F1	0	0	0	0	0	0
	380C2F2	0	0	0	0	0	0
	380C2F3	0	0	0	0	0	0
	RTG	0	0	0	0	0	0
NL3/3	GW / opgw	3305	13212	35636	3304	8802	-28293
Wind, -5°C	150C1F1	7771	27388	81353	7769	21169	-72052
Permanent loads yg= 0.9	150C1F2	7770	26553	79875	7769	20974	-71871
Wind angle: -45°	150C1F3	7770	25518	78108	7769	20732	-71665
	380C2F1	0	0	0	0	0	0
	380C2F2	0	0	0	0	0	0
	380C2F3	0	0	0	0	0	0
	RTG	0	0	0	0	0	0
NL3/4	GW / opgw	2336	6206	20501	2336	5599	-20009
Construction/maintenance, +5°C	150C1F1	7593	20156	67755	7593	18508	-66582
Permanent loads yg= 0.9	150C1F2	7593	19942	67542	7593	18451	-66566
Wind angle: -45°	150C1F3	7593	19676	67299	7593	18380	-66549
	380C2F1	0	0	0	0	0	0
	380C2F2	0	0	0	0	0	0
	380C2F3	0	0	0	0	0	0
	RTG	0	0	0	0	0	0

ZWW4HK400

Loadcases for tower strength (Special limit state)

		Ahead			Back		
Loadcase according to 50341-3-15	Att. Point	Vertical [N]	Transversal [N]	Longitudinal [N]	Vertical [N]	Transversal [N]	Longitudinal [N]
NL3/1a	GW / opgw	0	0	0	0	0	0
Wind, 10°C	150C1F1	0	0	0	0	0	0
Permanent loads yg= 1.2	150C1F2	0	0	0	0	0	0
Wind angle: 0°	150C1F3	0	0	0	0	0	0
	380C2F1	17045	39437	142845	17045	39437	-142845
	380C2F2	17045	39342	142830	17045	39342	-142830
	380C2F3	17045	39221	142815	17045	39221	-142815
	RTG	0	0	0	4620	10674	-38843
NL3/1b	GW / opgw	0	0	0	0	0	0
Wind, -20°C	150C1F1	0	0	0	0	0	0
Permanent loads yg= 1.2	150C1F2	0	0	0	0	0	0
Wind angle: 0°	150C1F3	0	0	0	0	0	0
	380C2F1	17036	44322	164077	17036	44322	-164077
	380C2F2	17036	44295	164081	17036	44295	-164081
	380C2F3	17036	44260	164085	17036	44260	-164085
	RTG	0	0	0	4618	11771	-43625
NL3/3	GW / opgw	0	0	0	0	0	0
Wind, -5°C	150C1F1	0	0	0	0	0	0
Permanent loads yg= 1.2	150C1F2	0	0	0	0	0	0
Wind angle: 0°	150C1F3	0	0	0	0	0	0
	380C2F1	19802	46887	171259	19802	46887	-171259
	380C2F2	19802	46808	171256	19802	46808	-171256
	380C2F3	19802	46707	171253	19802	46707	-171253
	RTG	0	0	0	7767	16943	-61667
NL3/4	GW / opgw	0	0	0	0	0	0
Construction/maintenance, +5°C	150C1F1	0	0	0	0	0	0
Permanent loads yg= 1.2	150C1F2	0	0	0	0	0	0
Wind angle: 0°	150C1F3	0	0	0	0	0	0
	380C2F1	19451	43765	162000	19451	43765	-162000
	380C2F2	19451	43738	162004	19451	43738	-162004
	380C2F3	19451	43704	162010	19451	43704	-162010
	RTG	0	0	0	5823	12862	-47696
NL3/1a	GW / opgw	0	0	0	0	0	0
Wind, 10°C	150C1F1	0	0	0	0	0	0
Permanent loads yg= 1.2	150C1F2	0	0	0	0	0	0
Wind angle: 45°	150C1F3	0	0	0	0	0	0
	380C2F1	17045	43248	145217	17048	57685	-166717
	380C2F2	17045	42794	144795	17048	55754	-163327
	380C2F3	17045	42229	144312	17047	53358	-159262
	RTG	0	0	0	4621	14690	-43701
NL3/1b	GW / opgw	0	0	0	0	0	0
Wind, -20°C	150C1F1	0	0	0	0	0	0
Permanent loads yg= 1.2	150C1F2	0	0	0	0	0	0
Wind angle: 45°	150C1F3	0	0	0	0	0	0
	380C2F1	17036	45318	164152	17036	48532	-166189
	380C2F2	17036	45207	164127	17036	48117	-165814
	380C2F3	17036	45066	164100	17036	47600	-165386
	RTG	0	0	0	4618	12712	-44021
NL3/3	GW / opgw	0	0	0	0	0	0
Wind, -5°C	150C1F1	0	0	0	0	0	0
Permanent loads yg= 1.2	150C1F2	0	0	0	0	0	0
Wind angle: 45°	150C1F3	0	0	0	0	0	0
	380C2F1	19803	49966	172566	19805	61135	-186431
	380C2F2	19803	49606	172319	19805	59641	-184137
	380C2F3	19803	49157	172039	19804	57794	-181432
	RTG	0	0	0	7768	22876	-67855
NL3/4	GW / opgw	0	0	0	0	0	0
Construction/maintenance, +5°C	150C1F1	0	0	0	0	0	0
Permanent loads yg= 1.2	150C1F2	0	0	0	0	0	0
Wind angle: 45°	150C1F3	0	0	0	0	0	0
	380C2F1	19451	44747	162016	19451	47830	-163562
	380C2F2	19451	44637	162000	19451	47436	-163268
	380C2F3	19451	44499	161985	19451	46945	-162935
	RTG	0	0	0	5823	13758	-47923
NL3/1a	GW / opgw	0	0	0	0	0	0
Wind, 10°C	150C1F1	0	0	0	0	0	0
Permanent loads yg= 1.2	150C1F2	0	0	0	0	0	0
Wind angle: 90°	150C1F3	0	0	0	0	0	0
	380C2F1	17050	63935	178185	17050	63935	-178185
	380C2F2	17049	61390	173439	17049	61390	-173439
	380C2F3	17048	58219	167668	17048	58219	-167668
	RTG	0	0	0	4621	16077	-46164

NL3/1b	GW / opgw	0	0	0	0	0	0
Wind, -20°C	150C1F1	0	0	0	0	0	0
Permanent loads yg= 1.2	150C1F2	0	0	0	0	0	0
Wind angle: 90°	150C1F3	0	0	0	0	0	0
	380C2F1	17036	49879	167572	17036	49879	-167572
	380C2F2	17036	49328	166979	17036	49328	-166979
	380C2F3	17036	48646	166297	17036	48646	-166297
	RTG	0	0	0	4618	13008	-44292
NL3/3	GW / opgw	0	0	0	0	0	0
Wind, -5°C	150C1F1	0	0	0	0	0	0
Permanent loads yg= 1.2	150C1F2	0	0	0	0	0	0
Wind angle: 90°	150C1F3	0	0	0	0	0	0
	380C2F1	19806	66003	194414	19806	66003	-194414
	380C2F2	19806	64014	191070	19806	64014	-191070
	380C2F3	19805	61548	187080	19805	61548	-187080
	RTG	0	0	0	7769	24883	-71068
NL3/4	GW / opgw	0	0	0	0	0	0
Construction/maintenance, +5°C	150C1F1	0	0	0	0	0	0
Permanent loads yg= 1.2	150C1F2	0	0	0	0	0	0
Wind angle: 90°	150C1F3	0	0	0	0	0	0
	380C2F1	19451	49100	164657	19451	49100	-164657
	380C2F2	19451	48582	164186	19451	48582	-164186
	380C2F3	19451	47938	163647	19451	47938	-163647
	RTG	0	0	0	5823	14030	-48105
NL3/1a	GW / opgw	0	0	0	0	0	0
Wind, 10°C	150C1F1	0	0	0	0	0	0
Permanent loads yg= 1.2	150C1F2	0	0	0	0	0	0
Wind angle: -45°	150C1F3	0	0	0	0	0	0
	380C2F1	17048	57685	166717	17045	43248	-145217
	380C2F2	17048	55754	163327	17045	42794	-144795
	380C2F3	17047	53358	159262	17045	42229	-144312
	RTG	0	0	0	4620	11522	-39293
NL3/1b	GW / opgw	0	0	0	0	0	0
Wind, -20°C	150C1F1	0	0	0	0	0	0
Permanent loads yg= 1.2	150C1F2	0	0	0	0	0	0
Wind angle: -45°	150C1F3	0	0	0	0	0	0
	380C2F1	17036	48532	166189	17036	45318	-164152
	380C2F2	17036	48117	165814	17036	45207	-164127
	380C2F3	17036	47600	165386	17036	45066	-164100
	RTG	0	0	0	4618	11997	-43633
NL3/3	GW / opgw	0	0	0	0	0	0
Wind, -5°C	150C1F1	0	0	0	0	0	0
Permanent loads yg= 1.2	150C1F2	0	0	0	0	0	0
Wind angle: -45°	150C1F3	0	0	0	0	0	0
	380C2F1	19805	61135	186431	19803	49966	-172566
	380C2F2	19805	59641	184137	19803	49606	-172319
	380C2F3	19804	57794	181432	19803	49157	-172039
	RTG	0	0	0	7767	18232	-62203
NL3/4	GW / opgw	0	0	0	0	0	0
Construction/maintenance, +5°C	150C1F1	0	0	0	0	0	0
Permanent loads yg= 1.2	150C1F2	0	0	0	0	0	0
Wind angle: -45°	150C1F3	0	0	0	0	0	0
	380C2F1	19451	47830	163562	19451	44747	-162016
	380C2F2	19451	47436	163268	19451	44637	-162000
	380C2F3	19451	46945	162935	19451	44499	-161985
	RTG	0	0	0	5823	13083	-47686
NL3/1a	GW / opgw	0	0	0	0	0	0
Wind, 10°C	150C1F1	0	0	0	0	0	0
Permanent loads yg= 0.9	150C1F2	0	0	0	0	0	0
Wind angle: 0°	150C1F3	0	0	0	0	0	0
	380C2F1	12781	31454	113052	12781	31454	-113052
	380C2F2	12781	31354	113020	12781	31354	-113020
	380C2F3	12781	31229	112987	12781	31229	-112987
	RTG	0	0	0	3464	8457	-30569
NL3/1b	GW / opgw	0	0	0	0	0	0
Wind, -20°C	150C1F1	0	0	0	0	0	0
Permanent loads yg= 0.9	150C1F2	0	0	0	0	0	0
Wind angle: 0°	150C1F3	0	0	0	0	0	0
	380C2F1	12774	35897	132637	12774	35897	-132637
	380C2F2	12774	35870	132639	12774	35870	-132639
	380C2F3	12774	35835	132641	12774	35835	-132641
	RTG	0	0	0	3463	9430	-34888

NL3/3	GW / opgw	0	0	0	0	0	0
Wind, -5°C	150C1F1	0	0	0	0	0	0
Permanent loads yg= 0.9	150C1F2	0	0	0	0	0	0
Wind angle: 0°	150C1F3	0	0	0	0	0	0
	380C2F1	15538	39068	142079	15538	39068	-142079
	380C2F2	15538	38986	142066	15538	38986	-142066
	380C2F3	15538	38883	142054	15538	38883	-142054
	RTG	0	0	0	6610	15011	-54458
NL3/4	GW / opgw	0	0	0	0	0	0
Construction/maintenance, +5°C	150C1F1	0	0	0	0	0	0
Permanent loads yg= 0.9	150C1F2	0	0	0	0	0	0
Wind angle: 0°	150C1F3	0	0	0	0	0	0
	380C2F1	15186	36009	133052	15186	36009	-133052
	380C2F2	15186	35981	133054	15186	35981	-133054
	380C2F3	15186	35946	133059	15186	35946	-133059
	RTG	0	0	0	4667	10769	-39885
NL3/1a	GW / opgw	0	0	0	0	0	0
Wind, 10°C	150C1F1	0	0	0	0	0	0
Permanent loads yg= 0.9	150C1F2	0	0	0	0	0	0
Wind angle: 45°	150C1F3	0	0	0	0	0	0
	380C2F1	12781	35619	116750	12784	52013	-145554
	380C2F2	12781	35110	116122	12784	49840	-141264
	380C2F3	12781	34481	115397	12783	47130	-136026
	RTG	0	0	0	3465	12977	-37311
NL3/1b	GW / opgw	0	0	0	0	0	0
Wind, -20°C	150C1F1	0	0	0	0	0	0
Permanent loads yg= 0.9	150C1F2	0	0	0	0	0	0
Wind angle: 45°	150C1F3	0	0	0	0	0	0
	380C2F1	12774	36933	132858	12774	40465	-136087
	380C2F2	12774	36815	132809	12774	39998	-135518
	380C2F3	12774	36666	132755	12774	39420	-134861
	RTG	0	0	0	3463	10442	-35549
NL3/3	GW / opgw	0	0	0	0	0	0
Wind, -5°C	150C1F1	0	0	0	0	0	0
Permanent loads yg= 0.9	150C1F2	0	0	0	0	0	0
Wind angle: 45°	150C1F3	0	0	0	0	0	0
	380C2F1	15539	42338	144103	15541	54776	-162707
	380C2F2	15539	41948	143742	15541	53105	-159750
	380C2F3	15539	41464	143329	15540	51036	-156216
	RTG	0	0	0	6611	21321	-62052
NL3/4	GW / opgw	0	0	0	0	0	0
Construction/maintenance, +5°C	150C1F1	0	0	0	0	0	0
Permanent loads yg= 0.9	150C1F2	0	0	0	0	0	0
Wind angle: 45°	150C1F3	0	0	0	0	0	0
	380C2F1	15186	37015	133164	15186	40313	-135511
	380C2F2	15186	36902	133132	15186	39884	-135085
	380C2F3	15186	36759	133099	15186	39352	-134597
	RTG	0	0	0	4667	11702	-40251
NL3/1a	GW / opgw	0	0	0	0	0	0
Wind, 10°C	150C1F1	0	0	0	0	0	0
Permanent loads yg= 0.9	150C1F2	0	0	0	0	0	0
Wind angle: 90°	150C1F3	0	0	0	0	0	0
	380C2F1	12786	58962	159635	12786	58962	-159635
	380C2F2	12785	56147	153879	12785	56147	-153879
	380C2F3	12784	52610	146746	12784	52610	-146746
	RTG	0	0	0	3465	14539	-40424
NL3/1b	GW / opgw	0	0	0	0	0	0
Wind, -20°C	150C1F1	0	0	0	0	0	0
Permanent loads yg= 0.9	150C1F2	0	0	0	0	0	0
Wind angle: 90°	150C1F3	0	0	0	0	0	0
	380C2F1	12774	41993	138148	12774	41993	-138148
	380C2F2	12774	41367	137270	12774	41367	-137270
	380C2F3	12774	40594	136250	12774	40594	-136250
	RTG	0	0	0	3463	10775	-35958
NL3/3	GW / opgw	0	0	0	0	0	0
Wind, -5°C	150C1F1	0	0	0	0	0	0
Permanent loads yg= 0.9	150C1F2	0	0	0	0	0	0
Wind angle: 90°	150C1F3	0	0	0	0	0	0
	380C2F1	15542	60198	172755	15542	60198	-172755
	380C2F2	15542	57987	168588	15542	57987	-168588
	380C2F3	15541	55238	163537	15541	55238	-163537
	RTG	0	0	0	6612	23468	-65790

NL3/4	GW / opgw	0	0	0	0	0	0
Construction/maintenance, +5°C	150C1F1	0	0	0	0	0	0
Permanent loads yg= 0.9	150C1F2	0	0	0	0	0	0
Wind angle: 90°	150C1F3	0	0	0	0	0	0
	380C2F1	15187	41708	137072	15187	41708	-137072
	380C2F2	15187	41137	136404	15187	41137	-136404
	380C2F3	15186	40431	135633	15186	40431	-135633
	RTG	0	0	0	4667	11994	-40507
NL3/1a	GW / opgw	0	0	0	0	0	0
Wind, 10°C	150C1F1	0	0	0	0	0	0
Permanent loads yg= 0.9	150C1F2	0	0	0	0	0	0
Wind angle: -45°	150C1F3	0	0	0	0	0	0
	380C2F1	12784	52013	145554	12781	35619	-116750
	380C2F2	12784	49840	141264	12781	35110	-116122
	380C2F3	12783	47130	136026	12781	34481	-115397
	RTG	0	0	0	3464	9375	-31283
NL3/1b	GW / opgw	0	0	0	0	0	0
Wind, -20°C	150C1F1	0	0	0	0	0	0
Permanent loads yg= 0.9	150C1F2	0	0	0	0	0	0
Wind angle: -45°	150C1F3	0	0	0	0	0	0
	380C2F1	12774	40465	136087	12774	36933	-132858
	380C2F2	12774	39998	135518	12774	36815	-132809
	380C2F3	12774	39420	134861	12774	36666	-132755
	RTG	0	0	0	3463	9663	-34924
NL3/3	GW / opgw	0	0	0	0	0	0
Wind, -5°C	150C1F1	0	0	0	0	0	0
Permanent loads yg= 0.9	150C1F2	0	0	0	0	0	0
Wind angle: -45°	150C1F3	0	0	0	0	0	0
	380C2F1	15541	54776	162707	15539	42338	-144103
	380C2F2	15541	53105	159750	15539	41948	-143742
	380C2F3	15540	51036	156216	15539	41464	-143329
	RTG	0	0	0	6610	16350	-55181
NL3/4	GW / opgw	0	0	0	0	0	0
Construction/maintenance, +5°C	150C1F1	0	0	0	0	0	0
Permanent loads yg= 0.9	150C1F2	0	0	0	0	0	0
Wind angle: -45°	150C1F3	0	0	0	0	0	0
	380C2F1	15186	40313	135511	15186	37015	-133164
	380C2F2	15186	39884	135085	15186	36902	-133132
	380C2F3	15186	39352	134597	15186	36759	-133099
	RTG	0	0	0	4667	10994	-39889

ZWW4HK400

Loadcases for tower strength (Special limit state)

		Ahead			Back		
Loadcase according to 50341-3-15	Att. Point	Vertical [N]	Transversal [N]	Longitudinal [N]	Vertical [N]	Transversal [N]	Longitudinal [N]
NL3/1a	GW / opgw	0	0	0	0	0	0
Wind, 10°C	150C1F1	0	0	0	0	0	0
Permanent loads yg= 1.2	150C1F2	0	0	0	0	0	0
Wind angle: 0°	150C1F3	0	0	0	0	0	0
	380C2F1	17045	39437	142845	17045	39437	-142845
	380C2F2	17045	39342	142830	17045	39342	-142830
	380C2F3	17045	39221	142815	17045	39221	-142815
	RTG	0	0	0	4620	10674	-38843
NL3/1b	GW / opgw	0	0	0	0	0	0
Wind, -20°C	150C1F1	0	0	0	0	0	0
Permanent loads yg= 1.2	150C1F2	0	0	0	0	0	0
Wind angle: 0°	150C1F3	0	0	0	0	0	0
	380C2F1	17036	44322	164077	17036	44322	-164077
	380C2F2	17036	44295	164081	17036	44295	-164081
	380C2F3	17036	44260	164085	17036	44260	-164085
	RTG	0	0	0	4618	11771	-43625
NL3/3	GW / opgw	0	0	0	0	0	0
Wind, -5°C	150C1F1	0	0	0	0	0	0
Permanent loads yg= 1.2	150C1F2	0	0	0	0	0	0
Wind angle: 0°	150C1F3	0	0	0	0	0	0
	380C2F1	19802	46887	171259	19802	46887	-171259
	380C2F2	19802	46808	171256	19802	46808	-171256
	380C2F3	19802	46707	171253	19802	46707	-171253
	RTG	0	0	0	7767	16943	-61667
NL3/4	GW / opgw	0	0	0	0	0	0
Construction/maintenance, +5°C	150C1F1	0	0	0	0	0	0
Permanent loads yg= 1.2	150C1F2	0	0	0	0	0	0
Wind angle: 0°	150C1F3	0	0	0	0	0	0
	380C2F1	19451	43765	162000	19451	43765	-162000
	380C2F2	19451	43738	162004	19451	43738	-162004
	380C2F3	19451	43704	162010	19451	43704	-162010
	RTG	0	0	0	5823	12862	-47696
NL3/1a	GW / opgw	0	0	0	0	0	0
Wind, 10°C	150C1F1	0	0	0	0	0	0
Permanent loads yg= 1.2	150C1F2	0	0	0	0	0	0
Wind angle: 45°	150C1F3	0	0	0	0	0	0
	380C2F1	17045	43248	145217	17048	57685	-166717
	380C2F2	17045	42794	144795	17048	55754	-163327
	380C2F3	17045	42229	144312	17047	53358	-159262
	RTG	0	0	0	4621	14690	-43701
NL3/1b	GW / opgw	0	0	0	0	0	0
Wind, -20°C	150C1F1	0	0	0	0	0	0
Permanent loads yg= 1.2	150C1F2	0	0	0	0	0	0
Wind angle: 45°	150C1F3	0	0	0	0	0	0
	380C2F1	17036	45318	164152	17036	48532	-166189
	380C2F2	17036	45207	164127	17036	48117	-165814
	380C2F3	17036	45066	164100	17036	47600	-165386
	RTG	0	0	0	4618	12712	-44021
NL3/3	GW / opgw	0	0	0	0	0	0
Wind, -5°C	150C1F1	0	0	0	0	0	0
Permanent loads yg= 1.2	150C1F2	0	0	0	0	0	0
Wind angle: 45°	150C1F3	0	0	0	0	0	0
	380C2F1	19803	49966	172566	19805	61135	-186431
	380C2F2	19803	49606	172319	19805	59641	-184137
	380C2F3	19803	49157	172039	19804	57794	-181432
	RTG	0	0	0	7768	22876	-67855
NL3/4	GW / opgw	0	0	0	0	0	0
Construction/maintenance, +5°C	150C1F1	0	0	0	0	0	0
Permanent loads yg= 1.2	150C1F2	0	0	0	0	0	0
Wind angle: 45°	150C1F3	0	0	0	0	0	0
	380C2F1	19451	44747	162016	19451	47830	-163562
	380C2F2	19451	44637	162000	19451	47436	-163268
	380C2F3	19451	44499	161985	19451	46945	-162935
	RTG	0	0	0	5823	13758	-47923
NL3/1a	GW / opgw	0	0	0	0	0	0
Wind, 10°C	150C1F1	0	0	0	0	0	0
Permanent loads yg= 1.2	150C1F2	0	0	0	0	0	0
Wind angle: 90°	150C1F3	0	0	0	0	0	0
	380C2F1	17050	63935	178185	17050	63935	-178185
	380C2F2	17049	61390	173439	17049	61390	-173439
	380C2F3	17048	58219	167668	17048	58219	-167668
	RTG	0	0	0	4621	16077	-46164

NL3/1b	GW / opgw	0	0	0	0	0	0
Wind, -20°C	150C1F1	0	0	0	0	0	0
Permanent loads yg= 1.2	150C1F2	0	0	0	0	0	0
Wind angle: 90°	150C1F3	0	0	0	0	0	0
	380C2F1	17036	49879	167572	17036	49879	-167572
	380C2F2	17036	49328	166979	17036	49328	-166979
	380C2F3	17036	48646	166297	17036	48646	-166297
	RTG	0	0	0	4618	13008	-44292
NL3/3	GW / opgw	0	0	0	0	0	0
Wind, -5°C	150C1F1	0	0	0	0	0	0
Permanent loads yg= 1.2	150C1F2	0	0	0	0	0	0
Wind angle: 90°	150C1F3	0	0	0	0	0	0
	380C2F1	19806	66003	194414	19806	66003	-194414
	380C2F2	19806	64014	191070	19806	64014	-191070
	380C2F3	19805	61548	187080	19805	61548	-187080
	RTG	0	0	0	7769	24883	-71068
NL3/4	GW / opgw	0	0	0	0	0	0
Construction/maintenance, +5°C	150C1F1	0	0	0	0	0	0
Permanent loads yg= 1.2	150C1F2	0	0	0	0	0	0
Wind angle: 90°	150C1F3	0	0	0	0	0	0
	380C2F1	19451	49100	164657	19451	49100	-164657
	380C2F2	19451	48582	164186	19451	48582	-164186
	380C2F3	19451	47938	163647	19451	47938	-163647
	RTG	0	0	0	5823	14030	-48105
NL3/1a	GW / opgw	0	0	0	0	0	0
Wind, 10°C	150C1F1	0	0	0	0	0	0
Permanent loads yg= 1.2	150C1F2	0	0	0	0	0	0
Wind angle: -45°	150C1F3	0	0	0	0	0	0
	380C2F1	17048	57685	166717	17045	43248	-145217
	380C2F2	17048	55754	163327	17045	42794	-144795
	380C2F3	17047	53358	159262	17045	42229	-144312
	RTG	0	0	0	4620	11522	-39293
NL3/1b	GW / opgw	0	0	0	0	0	0
Wind, -20°C	150C1F1	0	0	0	0	0	0
Permanent loads yg= 1.2	150C1F2	0	0	0	0	0	0
Wind angle: -45°	150C1F3	0	0	0	0	0	0
	380C2F1	17036	48532	166189	17036	45318	-164152
	380C2F2	17036	48117	165814	17036	45207	-164127
	380C2F3	17036	47600	165386	17036	45066	-164100
	RTG	0	0	0	4618	11997	-43633
NL3/3	GW / opgw	0	0	0	0	0	0
Wind, -5°C	150C1F1	0	0	0	0	0	0
Permanent loads yg= 1.2	150C1F2	0	0	0	0	0	0
Wind angle: -45°	150C1F3	0	0	0	0	0	0
	380C2F1	19805	61135	186431	19803	49966	-172566
	380C2F2	19805	59641	184137	19803	49606	-172319
	380C2F3	19804	57794	181432	19803	49157	-172039
	RTG	0	0	0	7767	18232	-62203
NL3/4	GW / opgw	0	0	0	0	0	0
Construction/maintenance, +5°C	150C1F1	0	0	0	0	0	0
Permanent loads yg= 1.2	150C1F2	0	0	0	0	0	0
Wind angle: -45°	150C1F3	0	0	0	0	0	0
	380C2F1	19451	47830	163562	19451	44747	-162016
	380C2F2	19451	47436	163268	19451	44637	-162000
	380C2F3	19451	46945	162935	19451	44499	-161985
	RTG	0	0	0	5823	13083	-47686
NL3/1a	GW / opgw	0	0	0	0	0	0
Wind, 10°C	150C1F1	0	0	0	0	0	0
Permanent loads yg= 0.9	150C1F2	0	0	0	0	0	0
Wind angle: 0°	150C1F3	0	0	0	0	0	0
	380C2F1	12781	31454	113052	12781	31454	-113052
	380C2F2	12781	31354	113020	12781	31354	-113020
	380C2F3	12781	31229	112987	12781	31229	-112987
	RTG	0	0	0	3464	8457	-30569
NL3/1b	GW / opgw	0	0	0	0	0	0
Wind, -20°C	150C1F1	0	0	0	0	0	0
Permanent loads yg= 0.9	150C1F2	0	0	0	0	0	0
Wind angle: 0°	150C1F3	0	0	0	0	0	0
	380C2F1	12774	35897	132637	12774	35897	-132637
	380C2F2	12774	35870	132639	12774	35870	-132639
	380C2F3	12774	35835	132641	12774	35835	-132641
	RTG	0	0	0	3463	9430	-34888

NL3/3	GW / opgw	0	0	0	0	0	0
Wind, -5°C	150C1F1	0	0	0	0	0	0
Permanent loads yg= 0.9	150C1F2	0	0	0	0	0	0
Wind angle: 0°	150C1F3	0	0	0	0	0	0
	380C2F1	15538	39068	142079	15538	39068	-142079
	380C2F2	15538	38986	142066	15538	38986	-142066
	380C2F3	15538	38883	142054	15538	38883	-142054
	RTG	0	0	0	6610	15011	-54458
NL3/4	GW / opgw	0	0	0	0	0	0
Construction/maintenance, +5°C	150C1F1	0	0	0	0	0	0
Permanent loads yg= 0.9	150C1F2	0	0	0	0	0	0
Wind angle: 0°	150C1F3	0	0	0	0	0	0
	380C2F1	15186	36009	133052	15186	36009	-133052
	380C2F2	15186	35981	133054	15186	35981	-133054
	380C2F3	15186	35946	133059	15186	35946	-133059
	RTG	0	0	0	4667	10769	-39885
NL3/1a	GW / opgw	0	0	0	0	0	0
Wind, 10°C	150C1F1	0	0	0	0	0	0
Permanent loads yg= 0.9	150C1F2	0	0	0	0	0	0
Wind angle: 45°	150C1F3	0	0	0	0	0	0
	380C2F1	12781	35619	116750	12784	52013	-145554
	380C2F2	12781	35110	116122	12784	49840	-141264
	380C2F3	12781	34481	115397	12783	47130	-136026
	RTG	0	0	0	3465	12977	-37311
NL3/1b	GW / opgw	0	0	0	0	0	0
Wind, -20°C	150C1F1	0	0	0	0	0	0
Permanent loads yg= 0.9	150C1F2	0	0	0	0	0	0
Wind angle: 45°	150C1F3	0	0	0	0	0	0
	380C2F1	12774	36933	132858	12774	40465	-136087
	380C2F2	12774	36815	132809	12774	39998	-135518
	380C2F3	12774	36666	132755	12774	39420	-134861
	RTG	0	0	0	3463	10442	-35549
NL3/3	GW / opgw	0	0	0	0	0	0
Wind, -5°C	150C1F1	0	0	0	0	0	0
Permanent loads yg= 0.9	150C1F2	0	0	0	0	0	0
Wind angle: 45°	150C1F3	0	0	0	0	0	0
	380C2F1	15539	42338	144103	15541	54776	-162707
	380C2F2	15539	41948	143742	15541	53105	-159750
	380C2F3	15539	41464	143329	15540	51036	-156216
	RTG	0	0	0	6611	21321	-62052
NL3/4	GW / opgw	0	0	0	0	0	0
Construction/maintenance, +5°C	150C1F1	0	0	0	0	0	0
Permanent loads yg= 0.9	150C1F2	0	0	0	0	0	0
Wind angle: 45°	150C1F3	0	0	0	0	0	0
	380C2F1	15186	37015	133164	15186	40313	-135511
	380C2F2	15186	36902	133132	15186	39884	-135085
	380C2F3	15186	36759	133099	15186	39352	-134597
	RTG	0	0	0	4667	11702	-40251
NL3/1a	GW / opgw	0	0	0	0	0	0
Wind, 10°C	150C1F1	0	0	0	0	0	0
Permanent loads yg= 0.9	150C1F2	0	0	0	0	0	0
Wind angle: 90°	150C1F3	0	0	0	0	0	0
	380C2F1	12786	58962	159635	12786	58962	-159635
	380C2F2	12785	56147	153879	12785	56147	-153879
	380C2F3	12784	52610	146746	12784	52610	-146746
	RTG	0	0	0	3465	14539	-40424
NL3/1b	GW / opgw	0	0	0	0	0	0
Wind, -20°C	150C1F1	0	0	0	0	0	0
Permanent loads yg= 0.9	150C1F2	0	0	0	0	0	0
Wind angle: 90°	150C1F3	0	0	0	0	0	0
	380C2F1	12774	41993	138148	12774	41993	-138148
	380C2F2	12774	41367	137270	12774	41367	-137270
	380C2F3	12774	40594	136250	12774	40594	-136250
	RTG	0	0	0	3463	10775	-35958
NL3/3	GW / opgw	0	0	0	0	0	0
Wind, -5°C	150C1F1	0	0	0	0	0	0
Permanent loads yg= 0.9	150C1F2	0	0	0	0	0	0
Wind angle: 90°	150C1F3	0	0	0	0	0	0
	380C2F1	15542	60198	172755	15542	60198	-172755
	380C2F2	15542	57987	168588	15542	57987	-168588
	380C2F3	15541	55238	163537	15541	55238	-163537
	RTG	0	0	0	6612	23468	-65790

NL3/4	GW / opgw	0	0	0	0	0	0
Construction/maintenance, +5°C	150C1F1	0	0	0	0	0	0
Permanent loads yg= 0.9	150C1F2	0	0	0	0	0	0
Wind angle: 90°	150C1F3	0	0	0	0	0	0
	380C2F1	15187	41708	137072	15187	41708	-137072
	380C2F2	15187	41137	136404	15187	41137	-136404
	380C2F3	15186	40431	135633	15186	40431	-135633
	RTG	0	0	0	4667	11994	-40507
NL3/1a	GW / opgw	0	0	0	0	0	0
Wind, 10°C	150C1F1	0	0	0	0	0	0
Permanent loads yg= 0.9	150C1F2	0	0	0	0	0	0
Wind angle: -45°	150C1F3	0	0	0	0	0	0
	380C2F1	12784	52013	145554	12781	35619	-116750
	380C2F2	12784	49840	141264	12781	35110	-116122
	380C2F3	12783	47130	136026	12781	34481	-115397
	RTG	0	0	0	3464	9375	-31283
NL3/1b	GW / opgw	0	0	0	0	0	0
Wind, -20°C	150C1F1	0	0	0	0	0	0
Permanent loads yg= 0.9	150C1F2	0	0	0	0	0	0
Wind angle: -45°	150C1F3	0	0	0	0	0	0
	380C2F1	12774	40465	136087	12774	36933	-132858
	380C2F2	12774	39998	135518	12774	36815	-132809
	380C2F3	12774	39420	134861	12774	36666	-132755
	RTG	0	0	0	3463	9663	-34924
NL3/3	GW / opgw	0	0	0	0	0	0
Wind, -5°C	150C1F1	0	0	0	0	0	0
Permanent loads yg= 0.9	150C1F2	0	0	0	0	0	0
Wind angle: -45°	150C1F3	0	0	0	0	0	0
	380C2F1	15541	54776	162707	15539	42338	-144103
	380C2F2	15541	53105	159750	15539	41948	-143742
	380C2F3	15540	51036	156216	15539	41464	-143329
	RTG	0	0	0	6610	16350	-55181
NL3/4	GW / opgw	0	0	0	0	0	0
Construction/maintenance, +5°C	150C1F1	0	0	0	0	0	0
Permanent loads yg= 0.9	150C1F2	0	0	0	0	0	0
Wind angle: -45°	150C1F3	0	0	0	0	0	0
	380C2F1	15186	40313	135511	15186	37015	-133164
	380C2F2	15186	39884	135085	15186	36902	-133132
	380C2F3	15186	39352	134597	15186	36759	-133099
	RTG	0	0	0	4667	10994	-39889

ZWW4HK400

Loadcases for tower strength (Special limit state)

		Ahead			Back		
Loadcase according to 50341-3-15	Att. Point	Vertical [N]	Transversal [N]	Longitudinal [N]	Vertical [N]	Transversal [N]	Longitudinal [N]
NL3/1a	GW / opgw	2313	5421	19460	0	0	0
Wind, 10°C	150C1F1	8522	19719	71422	0	0	0
Permanent loads yg= 1.2	150C1F2	8522	19671	71415	0	0	0
Wind angle: 0°	150C1F3	8522	19611	71408	0	0	0
	380C2F1	0	0	0	17045	39437	-142845
	380C2F2	0	0	0	17045	39342	-142830
	380C2F3	0	0	0	17045	39221	-142815
	RTG	0	0	0	4620	10674	-38843
NL3/1b	GW / opgw	2312	5963	22016	0	0	0
Wind, -20°C	150C1F1	8518	22161	82039	0	0	0
Permanent loads yg= 1.2	150C1F2	8518	22147	82040	0	0	0
Wind angle: 0°	150C1F3	8518	22130	82043	0	0	0
	380C2F1	0	0	0	17036	44322	-164077
	380C2F2	0	0	0	17036	44295	-164081
	380C2F3	0	0	0	17036	44260	-164085
	RTG	0	0	0	4618	11771	-43625
NL3/3	GW / opgw	3883	8610	30911	0	0	0
Wind, -5°C	150C1F1	9901	23444	85630	0	0	0
Permanent loads yg= 1.2	150C1F2	9901	23404	85628	0	0	0
Wind angle: 0°	150C1F3	9901	23354	85627	0	0	0
	380C2F1	0	0	0	19802	46887	-171259
	380C2F2	0	0	0	19802	46808	-171256
	380C2F3	0	0	0	19802	46707	-171253
	RTG	0	0	0	7767	16943	-61667
NL3/4	GW / opgw	2915	6463	23882	0	0	0
Construction/maintenance, +5°C	150C1F1	9725	21883	81000	0	0	0
Permanent loads yg= 1.2	150C1F2	9725	21869	81002	0	0	0
Wind angle: 0°	150C1F3	9725	21852	81005	0	0	0
	380C2F1	0	0	0	19451	43765	-162000
	380C2F2	0	0	0	19451	43738	-162004
	380C2F3	0	0	0	19451	43704	-162010
	RTG	0	0	0	5823	12862	-47696
NL3/1a	GW / opgw	2313	6149	20066	0	0	0
Wind, 10°C	150C1F1	8523	21624	72609	0	0	0
Permanent loads yg= 1.2	150C1F2	8523	21397	72397	0	0	0
Wind angle: 45°	150C1F3	8523	21115	72156	0	0	0
	380C2F1	0	0	0	17048	57685	-166717
	380C2F2	0	0	0	17048	55754	-163327
	380C2F3	0	0	0	17047	53358	-159262
	RTG	0	0	0	4621	14690	-43701
NL3/1b	GW / opgw	2312	6146	22050	0	0	0
Wind, -20°C	150C1F1	8518	22659	82076	0	0	0
Permanent loads yg= 1.2	150C1F2	8518	22603	82063	0	0	0
Wind angle: 45°	150C1F3	8518	22533	82050	0	0	0
	380C2F1	0	0	0	17036	48532	-166189
	380C2F2	0	0	0	17036	48117	-165814
	380C2F3	0	0	0	17036	47600	-165386
	RTG	0	0	0	4618	12712	-44021
NL3/3	GW / opgw	3883	9707	31669	0	0	0
Wind, -5°C	150C1F1	9901	24983	86283	0	0	0
Permanent loads yg= 1.2	150C1F2	9901	24803	86159	0	0	0
Wind angle: 45°	150C1F3	9901	24579	86020	0	0	0
	380C2F1	0	0	0	19805	61135	-186431
	380C2F2	0	0	0	19805	59641	-184137
	380C2F3	0	0	0	19804	57794	-181432
	RTG	0	0	0	7768	22876	-67855
NL3/4	GW / opgw	2915	6640	23894	0	0	0
Construction/maintenance, +5°C	150C1F1	9725	22373	81008	0	0	0
Permanent loads yg= 1.2	150C1F2	9725	22319	81000	0	0	0
Wind angle: 45°	150C1F3	9725	22250	80992	0	0	0
	380C2F1	0	0	0	19451	47830	-163562
	380C2F2	0	0	0	19451	47436	-163268
	380C2F3	0	0	0	19451	46945	-162935
	RTG	0	0	0	5823	13758	-47923
NL3/1a	GW / opgw	2314	10178	27217	0	0	0
Wind, 10°C	150C1F1	8525	31968	89093	0	0	0
Permanent loads yg= 1.2	150C1F2	8525	30695	86719	0	0	0
Wind angle: 90°	150C1F3	8524	29109	83834	0	0	0
	380C2F1	0	0	0	17050	63935	-178185
	380C2F2	0	0	0	17049	61390	-173439
	380C2F3	0	0	0	17048	58219	-167668
	RTG	0	0	0	4621	16077	-46164

NL3/1b	GW / opgw	2312	7025	22909	0	0	0
Wind, -20°C	150C1F1	8518	24939	83786	0	0	0
Permanent loads yg= 1.2	150C1F2	8518	24664	83489	0	0	0
Wind angle: 90°	150C1F3	8518	24323	83149	0	0	0
	380C2F1	0	0	0	17036	49879	-167572
	380C2F2	0	0	0	17036	49328	-166979
	380C2F3	0	0	0	17036	48646	-166297
	RTG	0	0	0	4618	13008	-44292
NL3/3	GW / opgw	3885	15569	41090	0	0	0
Wind, -5°C	150C1F1	9903	33002	97207	0	0	0
Permanent loads yg= 1.2	150C1F2	9903	32007	95535	0	0	0
Wind angle: 90°	150C1F3	9903	30774	93540	0	0	0
	380C2F1	0	0	0	19806	66003	-194414
	380C2F2	0	0	0	19806	64014	-191070
	380C2F3	0	0	0	19805	61548	-187080
	RTG	0	0	0	7769	24883	-71068
NL3/4	GW / opgw	2915	7446	24476	0	0	0
Construction/maintenance, +5°C	150C1F1	9726	24550	82329	0	0	0
Permanent loads yg= 1.2	150C1F2	9726	24291	82093	0	0	0
Wind angle: 90°	150C1F3	9726	23969	81824	0	0	0
	380C2F1	0	0	0	19451	49100	-164657
	380C2F2	0	0	0	19451	48582	-164186
	380C2F3	0	0	0	19451	47938	-163647
	RTG	0	0	0	5823	14030	-48105
NL3/1a	GW / opgw	2314	8980	24860	0	0	0
Wind, 10°C	150C1F1	8524	28843	83359	0	0	0
Permanent loads yg= 1.2	150C1F2	8524	27877	81663	0	0	0
Wind angle: -45°	150C1F3	8524	26679	79631	0	0	0
	380C2F1	0	0	0	17045	43248	-145217
	380C2F2	0	0	0	17045	42794	-144795
	380C2F3	0	0	0	17045	42229	-144312
	RTG	0	0	0	4620	11522	-39293
NL3/1b	GW / opgw	2312	6761	22572	0	0	0
Wind, -20°C	150C1F1	8518	24266	83095	0	0	0
Permanent loads yg= 1.2	150C1F2	8518	24058	82907	0	0	0
Wind angle: -45°	150C1F3	8518	23800	82693	0	0	0
	380C2F1	0	0	0	17036	45318	-164152
	380C2F2	0	0	0	17036	45207	-164127
	380C2F3	0	0	0	17036	45066	-164100
	RTG	0	0	0	4618	11997	-43633
NL3/3	GW / opgw	3884	13833	37952	0	0	0
Wind, -5°C	150C1F1	9902	30568	93216	0	0	0
Permanent loads yg= 1.2	150C1F2	9902	29821	92068	0	0	0
Wind angle: -45°	150C1F3	9902	28897	90716	0	0	0
	380C2F1	0	0	0	19803	49966	-172566
	380C2F2	0	0	0	19803	49606	-172319
	380C2F3	0	0	0	19803	49157	-172039
	RTG	0	0	0	7767	18232	-62203
NL3/4	GW / opgw	2915	7208	24240	0	0	0
Construction/maintenance, +5°C	150C1F1	9726	23915	81781	0	0	0
Permanent loads yg= 1.2	150C1F2	9725	23718	81634	0	0	0
Wind angle: -45°	150C1F3	9725	23473	81468	0	0	0
	380C2F1	0	0	0	19451	44747	-162016
	380C2F2	0	0	0	19451	44637	-162000
	380C2F3	0	0	0	19451	44499	-161985
	RTG	0	0	0	5823	13083	-47686
NL3/1a	GW / opgw	1735	4318	15341	0	0	0
Wind, 10°C	150C1F1	6390	15727	56526	0	0	0
Permanent loads yg= 0.9	150C1F2	6390	15677	56510	0	0	0
Wind angle: 0°	150C1F3	6390	15614	56493	0	0	0
	380C2F1	0	0	0	12781	31454	-113052
	380C2F2	0	0	0	12781	31354	-113020
	380C2F3	0	0	0	12781	31229	-112987
	RTG	0	0	0	3464	8457	-30569
NL3/1b	GW / opgw	1734	4791	17643	0	0	0
Wind, -20°C	150C1F1	6387	17949	66319	0	0	0
Permanent loads yg= 0.9	150C1F2	6387	17935	66319	0	0	0
Wind angle: 0°	150C1F3	6387	17917	66321	0	0	0
	380C2F1	0	0	0	12774	35897	-132637
	380C2F2	0	0	0	12774	35870	-132639
	380C2F3	0	0	0	12774	35835	-132641
	RTG	0	0	0	3463	9430	-34888

NL3/3	GW / opgw	3304	7647	27318	0	0	0
Wind, -5°C	150C1F1	7769	19534	71039	0	0	0
Permanent loads yg= 0.9	150C1F2	7769	19493	71033	0	0	0
Wind angle: 0°	150C1F3	7769	19441	71027	0	0	0
	380C2F1	0	0	0	15538	39068	-142079
	380C2F2	0	0	0	15538	38986	-142066
	380C2F3	0	0	0	15538	38883	-142054
	RTG	0	0	0	6610	15011	-54458
NL3/4	GW / opgw	2336	5417	19980	0	0	0
Construction/maintenance, +5°C	150C1F1	7593	18004	66526	0	0	0
Permanent loads yg= 0.9	150C1F2	7593	17991	66527	0	0	0
Wind angle: 0°	150C1F3	7593	17973	66529	0	0	0
	380C2F1	0	0	0	15186	36009	-133052
	380C2F2	0	0	0	15186	35981	-133054
	380C2F3	0	0	0	15186	35946	-133059
	RTG	0	0	0	4667	10769	-39885
NL3/1a	GW / opgw	1735	5126	16245	0	0	0
Wind, 10°C	150C1F1	6391	17810	58375	0	0	0
Permanent loads yg= 0.9	150C1F2	6391	17555	58061	0	0	0
Wind angle: 45°	150C1F3	6391	17240	57698	0	0	0
	380C2F1	0	0	0	12784	52013	-145554
	380C2F2	0	0	0	12784	49840	-141264
	380C2F3	0	0	0	12783	47130	-136026
	RTG	0	0	0	3465	12977	-37311
NL3/1b	GW / opgw	1734	4983	17711	0	0	0
Wind, -20°C	150C1F1	6387	18466	66429	0	0	0
Permanent loads yg= 0.9	150C1F2	6387	18407	66405	0	0	0
Wind angle: 45°	150C1F3	6387	18333	66378	0	0	0
	380C2F1	0	0	0	12774	40465	-136087
	380C2F2	0	0	0	12774	39998	-135518
	380C2F3	0	0	0	12774	39420	-134861
	RTG	0	0	0	3463	10442	-35549
NL3/3	GW / opgw	3304	8802	28293	0	0	0
Wind, -5°C	150C1F1	7769	21169	72052	0	0	0
Permanent loads yg= 0.9	150C1F2	7769	20974	71871	0	0	0
Wind angle: 45°	150C1F3	7769	20732	71665	0	0	0
	380C2F1	0	0	0	15541	54776	-162707
	380C2F2	0	0	0	15541	53105	-159750
	380C2F3	0	0	0	15540	51036	-156216
	RTG	0	0	0	6611	21321	-62052
NL3/4	GW / opgw	2336	5599	20009	0	0	0
Construction/maintenance, +5°C	150C1F1	7593	18508	66582	0	0	0
Permanent loads yg= 0.9	150C1F2	7593	18451	66566	0	0	0
Wind angle: 45°	150C1F3	7593	18380	66549	0	0	0
	380C2F1	0	0	0	15186	40313	-135511
	380C2F2	0	0	0	15186	39884	-135085
	380C2F3	0	0	0	15186	39352	-134597
	RTG	0	0	0	4667	11702	-40251
NL3/1a	GW / opgw	1736	9613	25111	0	0	0
Wind, 10°C	150C1F1	6393	29481	79817	0	0	0
Permanent loads yg= 0.9	150C1F2	6393	28073	76939	0	0	0
Wind angle: 90°	150C1F3	6392	26305	73373	0	0	0
	380C2F1	0	0	0	12786	58962	-159635
	380C2F2	0	0	0	12785	56147	-153879
	380C2F3	0	0	0	12784	52610	-146746
	RTG	0	0	0	3465	14539	-40424
NL3/1b	GW / opgw	1734	5974	18987	0	0	0
Wind, -20°C	150C1F1	6387	20997	69074	0	0	0
Permanent loads yg= 0.9	150C1F2	6387	20683	68635	0	0	0
Wind angle: 90°	150C1F3	6387	20297	68125	0	0	0
	380C2F1	0	0	0	12774	41993	-138148
	380C2F2	0	0	0	12774	41367	-137270
	380C2F3	0	0	0	12774	40594	-136250
	RTG	0	0	0	3463	10775	-35958
NL3/3	GW / opgw	3306	15037	39110	0	0	0
Wind, -5°C	150C1F1	7771	30099	86377	0	0	0
Permanent loads yg= 0.9	150C1F2	7771	28994	84294	0	0	0
Wind angle: 90°	150C1F3	7771	27619	81769	0	0	0
	380C2F1	0	0	0	15542	60198	-172755
	380C2F2	0	0	0	15542	57987	-168588
	380C2F3	0	0	0	15541	55238	-163537
	RTG	0	0	0	6612	23468	-65790

NL3/4	GW / opgw	2336	6466	20820	0	0	0
Construction/maintenance, +5°C	150C1F1	7593	20854	68536	0	0	0
Permanent loads yg= 0.9	150C1F2	7593	20569	68202	0	0	0
Wind angle: 90°	150C1F3	7593	20216	67817	0	0	0
	380C2F1	0	0	0	15187	41708	-137072
	380C2F2	0	0	0	15187	41137	-136404
	380C2F3	0	0	0	15186	40431	-135633
	RTG	0	0	0	4667	11994	-40507
NL3/1a	GW / opgw	1735	8312	22368	0	0	0
Wind, 10°C	150C1F1	6392	26006	72777	0	0	0
Permanent loads yg= 0.9	150C1F2	6392	24920	70632	0	0	0
Wind angle: -45°	150C1F3	6392	23565	68013	0	0	0
	380C2F1	0	0	0	12781	35619	-116750
	380C2F2	0	0	0	12781	35110	-116122
	380C2F3	0	0	0	12781	34481	-115397
	RTG	0	0	0	3464	9375	-31283
NL3/1b	GW / opgw	1734	5671	18504	0	0	0
Wind, -20°C	150C1F1	6387	20232	68043	0	0	0
Permanent loads yg= 0.9	150C1F2	6387	19999	67759	0	0	0
Wind angle: -45°	150C1F3	6387	19710	67430	0	0	0
	380C2F1	0	0	0	12774	36933	-132858
	380C2F2	0	0	0	12774	36815	-132809
	380C2F3	0	0	0	12774	36666	-132755
	RTG	0	0	0	3463	9663	-34924
NL3/3	GW / opgw	3305	13212	35636	0	0	0
Wind, -5°C	150C1F1	7771	27388	81353	0	0	0
Permanent loads yg= 0.9	150C1F2	7770	26553	79875	0	0	0
Wind angle: -45°	150C1F3	7770	25518	78108	0	0	0
	380C2F1	0	0	0	15539	42338	-144103
	380C2F2	0	0	0	15539	41948	-143742
	380C2F3	0	0	0	15539	41464	-143329
	RTG	0	0	0	6610	16350	-55181
NL3/4	GW / opgw	2336	6206	20501	0	0	0
Construction/maintenance, +5°C	150C1F1	7593	20156	67755	0	0	0
Permanent loads yg= 0.9	150C1F2	7593	19942	67542	0	0	0
Wind angle: -45°	150C1F3	7593	19676	67299	0	0	0
	380C2F1	0	0	0	15186	37015	-133164
	380C2F2	0	0	0	15186	36902	-133132
	380C2F3	0	0	0	15186	36759	-133099
	RTG	0	0	0	4667	10994	-39889

ZWW4HK400

Loadcases for tower strength (Special limit state)

		Ahead			Back		
Loadcase according to 50341-3-15	Att. Point	Vertical [N]	Transversal [N]	Longitudinal [N]	Vertical [N]	Transversal [N]	Longitudinal [N]
NL3/1a	GW / opgw	0	0	0	2313	5421	-19460
Wind, 10°C	150C1F1	0	0	0	8522	19719	-71422
Permanent loads yg= 1.2	150C1F2	0	0	0	8522	19671	-71415
Wind angle: 0°	150C1F3	0	0	0	8522	19611	-71408
	380C2F1	17045	39437	142845	17045	39437	-142845
	380C2F2	17045	39342	142830	17045	39342	-142830
	380C2F3	17045	39221	142815	17045	39221	-142815
	RTG	4620	10674	38843	4620	10674	-38843
NL3/1b	GW / opgw	0	0	0	2312	5963	-22016
Wind, -20°C	150C1F1	0	0	0	8518	22161	-82039
Permanent loads yg= 1.2	150C1F2	0	0	0	8518	22147	-82040
Wind angle: 0°	150C1F3	0	0	0	8518	22130	-82043
	380C2F1	17036	44322	164077	17036	44322	-164077
	380C2F2	17036	44295	164081	17036	44295	-164081
	380C2F3	17036	44260	164085	17036	44260	-164085
	RTG	4618	11771	43625	4618	11771	-43625
NL3/3	GW / opgw	0	0	0	3883	8610	-30911
Wind, -5°C	150C1F1	0	0	0	9901	23444	-85630
Permanent loads yg= 1.2	150C1F2	0	0	0	9901	23404	-85628
Wind angle: 0°	150C1F3	0	0	0	9901	23354	-85627
	380C2F1	19802	46887	171259	19802	46887	-171259
	380C2F2	19802	46808	171256	19802	46808	-171256
	380C2F3	19802	46707	171253	19802	46707	-171253
	RTG	7767	16943	61667	7767	16943	-61667
NL3/4	GW / opgw	0	0	0	2915	6463	-23882
Construction/maintenance, +5°C	150C1F1	0	0	0	9725	21883	-81000
Permanent loads yg= 1.2	150C1F2	0	0	0	9725	21869	-81002
Wind angle: 0°	150C1F3	0	0	0	9725	21852	-81005
	380C2F1	19451	43765	162000	19451	43765	-162000
	380C2F2	19451	43738	162004	19451	43738	-162004
	380C2F3	19451	43704	162010	19451	43704	-162010
	RTG	5823	12862	47696	5823	12862	-47696
NL3/1a	GW / opgw	0	0	0	2314	8980	-24860
Wind, 10°C	150C1F1	0	0	0	8524	28843	-83359
Permanent loads yg= 1.2	150C1F2	0	0	0	8524	27877	-81663
Wind angle: 45°	150C1F3	0	0	0	8524	26679	-79631
	380C2F1	17045	43248	145217	17048	57685	-166717
	380C2F2	17045	42794	144795	17048	55754	-163327
	380C2F3	17045	42229	144312	17047	53358	-159262
	RTG	4620	11522	39293	4621	14690	-43701
NL3/1b	GW / opgw	0	0	0	2312	6761	-22572
Wind, -20°C	150C1F1	0	0	0	8518	24266	-83095
Permanent loads yg= 1.2	150C1F2	0	0	0	8518	24058	-82907
Wind angle: 45°	150C1F3	0	0	0	8518	23800	-82693
	380C2F1	17036	45318	164152	17036	48532	-166189
	380C2F2	17036	45207	164127	17036	48117	-165814
	380C2F3	17036	45066	164100	17036	47600	-165386
	RTG	4618	11997	43633	4618	12712	-44021
NL3/3	GW / opgw	0	0	0	3884	13833	-37952
Wind, -5°C	150C1F1	0	0	0	9902	30568	-93216
Permanent loads yg= 1.2	150C1F2	0	0	0	9902	29821	-92068
Wind angle: 45°	150C1F3	0	0	0	9902	28897	-90716
	380C2F1	19803	49966	172566	19805	61135	-186431
	380C2F2	19803	49606	172319	19805	59641	-184137
	380C2F3	19803	49157	172039	19804	57794	-181432
	RTG	7767	18232	62203	7768	22876	-67855
NL3/4	GW / opgw	0	0	0	2915	7208	-24240
Construction/maintenance, +5°C	150C1F1	0	0	0	9726	23915	-81781
Permanent loads yg= 1.2	150C1F2	0	0	0	9725	23718	-81634
Wind angle: 45°	150C1F3	0	0	0	9725	23473	-81468
	380C2F1	19451	44747	162016	19451	47830	-163562
	380C2F2	19451	44637	162000	19451	47436	-163268
	380C2F3	19451	44499	161985	19451	46945	-162935
	RTG	5823	13083	47686	5823	13758	-47923
NL3/1a	GW / opgw	0	0	0	2314	10178	-27217
Wind, 10°C	150C1F1	0	0	0	8525	31968	-89093
Permanent loads yg= 1.2	150C1F2	0	0	0	8525	30695	-86719
Wind angle: 90°	150C1F3	0	0	0	8524	29109	-83834
	380C2F1	17050	63935	178185	17050	63935	-178185
	380C2F2	17049	61390	173439	17049	61390	-173439
	380C2F3	17048	58219	167668	17048	58219	-167668
	RTG	4621	16077	46164	4621	16077	-46164

NL3/1b	GW / opgw	0	0	0	2312	7025	-22909
Wind, -20°C	150C1F1	0	0	0	8518	24939	-83786
Permanent loads yg= 1.2	150C1F2	0	0	0	8518	24664	-83489
Wind angle: 90°	150C1F3	0	0	0	8518	24323	-83149
	380C2F1	17036	49879	167572	17036	49879	-167572
	380C2F2	17036	49328	166979	17036	49328	-166979
	380C2F3	17036	48646	166297	17036	48646	-166297
	RTG	4618	13008	44292	4618	13008	-44292
NL3/3	GW / opgw	0	0	0	3885	15569	-41090
Wind, -5°C	150C1F1	0	0	0	9903	33002	-97207
Permanent loads yg= 1.2	150C1F2	0	0	0	9903	32007	-95535
Wind angle: 90°	150C1F3	0	0	0	9903	30774	-93540
	380C2F1	19806	66003	194414	19806	66003	-194414
	380C2F2	19806	64014	191070	19806	64014	-191070
	380C2F3	19805	61548	187080	19805	61548	-187080
	RTG	7769	24883	71068	7769	24883	-71068
NL3/4	GW / opgw	0	0	0	2915	7446	-24476
Construction/maintenance, +5°C	150C1F1	0	0	0	9726	24550	-82329
Permanent loads yg= 1.2	150C1F2	0	0	0	9726	24291	-82093
Wind angle: 90°	150C1F3	0	0	0	9726	23969	-81824
	380C2F1	19451	49100	164657	19451	49100	-164657
	380C2F2	19451	48582	164186	19451	48582	-164186
	380C2F3	19451	47938	163647	19451	47938	-163647
	RTG	5823	14030	48105	5823	14030	-48105
NL3/1a	GW / opgw	0	0	0	2313	6149	-20066
Wind, 10°C	150C1F1	0	0	0	8523	21624	-72609
Permanent loads yg= 1.2	150C1F2	0	0	0	8523	21397	-72397
Wind angle: -45°	150C1F3	0	0	0	8523	21115	-72156
	380C2F1	17048	57685	166717	17045	43248	-145217
	380C2F2	17048	55754	163327	17045	42794	-144795
	380C2F3	17047	53358	159262	17045	42229	-144312
	RTG	4621	14690	43701	4620	11522	-39293
NL3/1b	GW / opgw	0	0	0	2312	6146	-22050
Wind, -20°C	150C1F1	0	0	0	8518	22659	-82076
Permanent loads yg= 1.2	150C1F2	0	0	0	8518	22603	-82063
Wind angle: -45°	150C1F3	0	0	0	8518	22533	-82050
	380C2F1	17036	48532	166189	17036	45318	-164152
	380C2F2	17036	48117	165814	17036	45207	-164127
	380C2F3	17036	47600	165386	17036	45066	-164100
	RTG	4618	12712	44021	4618	11997	-43633
NL3/3	GW / opgw	0	0	0	3883	9707	-31669
Wind, -5°C	150C1F1	0	0	0	9901	24983	-86283
Permanent loads yg= 1.2	150C1F2	0	0	0	9901	24803	-86159
Wind angle: -45°	150C1F3	0	0	0	9901	24579	-86020
	380C2F1	19805	61135	186431	19803	49966	-172566
	380C2F2	19805	59641	184137	19803	49606	-172319
	380C2F3	19804	57794	181432	19803	49157	-172039
	RTG	7768	22876	67855	7767	18232	-62203
NL3/4	GW / opgw	0	0	0	2915	6640	-23894
Construction/maintenance, +5°C	150C1F1	0	0	0	9725	22373	-81008
Permanent loads yg= 1.2	150C1F2	0	0	0	9725	22319	-81000
Wind angle: -45°	150C1F3	0	0	0	9725	22250	-80992
	380C2F1	19451	47830	163562	19451	44747	-162016
	380C2F2	19451	47436	163268	19451	44637	-162000
	380C2F3	19451	46945	162935	19451	44499	-161985
	RTG	5823	13758	47923	5823	13083	-47686
NL3/1a	GW / opgw	0	0	0	1735	4318	-15341
Wind, 10°C	150C1F1	0	0	0	6390	15727	-56526
Permanent loads yg= 0.9	150C1F2	0	0	0	6390	15677	-56510
Wind angle: 0°	150C1F3	0	0	0	6390	15614	-56493
	380C2F1	12781	31454	113052	12781	31454	-113052
	380C2F2	12781	31354	113020	12781	31354	-113020
	380C2F3	12781	31229	112987	12781	31229	-112987
	RTG	3464	8457	30569	3464	8457	-30569
NL3/1b	GW / opgw	0	0	0	1734	4791	-17643
Wind, -20°C	150C1F1	0	0	0	6387	17949	-66319
Permanent loads yg= 0.9	150C1F2	0	0	0	6387	17935	-66319
Wind angle: 0°	150C1F3	0	0	0	6387	17917	-66321
	380C2F1	12774	35897	132637	12774	35897	-132637
	380C2F2	12774	35870	132639	12774	35870	-132639
	380C2F3	12774	35835	132641	12774	35835	-132641
	RTG	3463	9430	34888	3463	9430	-34888

NL3/3	GW / opgw	0	0	0	3304	7647	-27318
Wind, -5°C	150C1F1	0	0	0	7769	19534	-71039
Permanent loads yg= 0.9	150C1F2	0	0	0	7769	19493	-71033
Wind angle: 0°	150C1F3	0	0	0	7769	19441	-71027
	380C2F1	15538	39068	142079	15538	39068	-142079
	380C2F2	15538	38986	142066	15538	38986	-142066
	380C2F3	15538	38883	142054	15538	38883	-142054
	RTG	6610	15011	54458	6610	15011	-54458
NL3/4	GW / opgw	0	0	0	2336	5417	-19980
Construction/maintenance, +5°C	150C1F1	0	0	0	7593	18004	-66526
Permanent loads yg= 0.9	150C1F2	0	0	0	7593	17991	-66527
Wind angle: 0°	150C1F3	0	0	0	7593	17973	-66529
	380C2F1	15186	36009	133052	15186	36009	-133052
	380C2F2	15186	35981	133054	15186	35981	-133054
	380C2F3	15186	35946	133059	15186	35946	-133059
	RTG	4667	10769	39885	4667	10769	-39885
NL3/1a	GW / opgw	0	0	0	1735	8312	-22368
Wind, 10°C	150C1F1	0	0	0	6392	26006	-72777
Permanent loads yg= 0.9	150C1F2	0	0	0	6392	24920	-70632
Wind angle: 45°	150C1F3	0	0	0	6392	23565	-68013
	380C2F1	12781	35619	116750	12784	52013	-145554
	380C2F2	12781	35110	116122	12784	49840	-141264
	380C2F3	12781	34481	115397	12783	47130	-136026
	RTG	3464	9375	31283	3465	12977	-37311
NL3/1b	GW / opgw	0	0	0	1734	5671	-18504
Wind, -20°C	150C1F1	0	0	0	6387	20232	-68043
Permanent loads yg= 0.9	150C1F2	0	0	0	6387	19999	-67759
Wind angle: 45°	150C1F3	0	0	0	6387	19710	-67430
	380C2F1	12774	36933	132858	12774	40465	-136087
	380C2F2	12774	36815	132809	12774	39998	-135518
	380C2F3	12774	36666	132755	12774	39420	-134861
	RTG	3463	9663	34924	3463	10442	-35549
NL3/3	GW / opgw	0	0	0	3305	13212	-35636
Wind, -5°C	150C1F1	0	0	0	7771	27388	-81353
Permanent loads yg= 0.9	150C1F2	0	0	0	7770	26553	-79875
Wind angle: 45°	150C1F3	0	0	0	7770	25518	-78108
	380C2F1	15539	42338	144103	15541	54776	-162707
	380C2F2	15539	41948	143742	15541	53105	-159750
	380C2F3	15539	41464	143329	15540	51036	-156216
	RTG	6610	16350	55181	6611	21321	-62052
NL3/4	GW / opgw	0	0	0	2336	6206	-20501
Construction/maintenance, +5°C	150C1F1	0	0	0	7593	20156	-67755
Permanent loads yg= 0.9	150C1F2	0	0	0	7593	19942	-67542
Wind angle: 45°	150C1F3	0	0	0	7593	19676	-67299
	380C2F1	15186	37015	133164	15186	40313	-135511
	380C2F2	15186	36902	133132	15186	39884	-135085
	380C2F3	15186	36759	133099	15186	39352	-134597
	RTG	4667	10994	39889	4667	11702	-40251
NL3/1a	GW / opgw	0	0	0	1736	9613	-25111
Wind, 10°C	150C1F1	0	0	0	6393	29481	-79817
Permanent loads yg= 0.9	150C1F2	0	0	0	6393	28073	-76939
Wind angle: 90°	150C1F3	0	0	0	6392	26305	-73373
	380C2F1	12786	58962	159635	12786	58962	-159635
	380C2F2	12785	56147	153879	12785	56147	-153879
	380C2F3	12784	52610	146746	12784	52610	-146746
	RTG	3465	14539	40424	3465	14539	-40424
NL3/1b	GW / opgw	0	0	0	1734	5974	-18987
Wind, -20°C	150C1F1	0	0	0	6387	20997	-69074
Permanent loads yg= 0.9	150C1F2	0	0	0	6387	20683	-68635
Wind angle: 90°	150C1F3	0	0	0	6387	20297	-68125
	380C2F1	12774	41993	138148	12774	41993	-138148
	380C2F2	12774	41367	137270	12774	41367	-137270
	380C2F3	12774	40594	136250	12774	40594	-136250
	RTG	3463	10775	35958	3463	10775	-35958
NL3/3	GW / opgw	0	0	0	3306	15037	-39110
Wind, -5°C	150C1F1	0	0	0	7771	30099	-86377
Permanent loads yg= 0.9	150C1F2	0	0	0	7771	28994	-84294
Wind angle: 90°	150C1F3	0	0	0	7771	27619	-81769
	380C2F1	15542	60198	172755	15542	60198	-172755
	380C2F2	15542	57987	168588	15542	57987	-168588
	380C2F3	15541	55238	163537	15541	55238	-163537
	RTG	6612	23468	65790	6612	23468	-65790

NL3/4	GW / opgw	0	0	0	2336	6466	-20820
Construction/maintenance, +5°C	150C1F1	0	0	0	7593	20854	-68536
Permanent loads yg= 0.9	150C1F2	0	0	0	7593	20569	-68202
Wind angle: 90°	150C1F3	0	0	0	7593	20216	-67817
	380C2F1	15187	41708	137072	15187	41708	-137072
	380C2F2	15187	41137	136404	15187	41137	-136404
	380C2F3	15186	40431	135633	15186	40431	-135633
	RTG	4667	11994	40507	4667	11994	-40507
NL3/1a	GW / opgw	0	0	0	1735	5126	-16245
Wind, 10°C	150C1F1	0	0	0	6391	17810	-58375
Permanent loads yg= 0.9	150C1F2	0	0	0	6391	17555	-58061
Wind angle: -45°	150C1F3	0	0	0	6391	17240	-57698
	380C2F1	12784	52013	145554	12781	35619	-116750
	380C2F2	12784	49840	141264	12781	35110	-116122
	380C2F3	12783	47130	136026	12781	34481	-115397
	RTG	3465	12977	37311	3464	9375	-31283
NL3/1b	GW / opgw	0	0	0	1734	4983	-17711
Wind, -20°C	150C1F1	0	0	0	6387	18466	-66429
Permanent loads yg= 0.9	150C1F2	0	0	0	6387	18407	-66405
Wind angle: -45°	150C1F3	0	0	0	6387	18333	-66378
	380C2F1	12774	40465	136087	12774	36933	-132858
	380C2F2	12774	39998	135518	12774	36815	-132809
	380C2F3	12774	39420	134861	12774	36666	-132755
	RTG	3463	10442	35549	3463	9663	-34924
NL3/3	GW / opgw	0	0	0	3304	8802	-28293
Wind, -5°C	150C1F1	0	0	0	7769	21169	-72052
Permanent loads yg= 0.9	150C1F2	0	0	0	7769	20974	-71871
Wind angle: -45°	150C1F3	0	0	0	7769	20732	-71665
	380C2F1	15541	54776	162707	15539	42338	-144103
	380C2F2	15541	53105	159750	15539	41948	-143742
	380C2F3	15540	51036	156216	15539	41464	-143329
	RTG	6611	21321	62052	6610	16350	-55181
NL3/4	GW / opgw	0	0	0	2336	5599	-20009
Construction/maintenance, +5°C	150C1F1	0	0	0	7593	18508	-66582
Permanent loads yg= 0.9	150C1F2	0	0	0	7593	18451	-66566
Wind angle: -45°	150C1F3	0	0	0	7593	18380	-66549
	380C2F1	15186	40313	135511	15186	37015	-133164
	380C2F2	15186	39884	135085	15186	36902	-133132
	380C2F3	15186	39352	134597	15186	36759	-133099
	RTG	4667	11702	40251	4667	10994	-39889

ZWW4HK400

Loadcases for tower strength (Special limit state)

		Ahead			Back		
Loadcase according to 50341-3-15	Att. Point	Vertical [N]	Transversal [N]	Longitudinal [N]	Vertical [N]	Transversal [N]	Longitudinal [N]
NL3/1a	GW / opgw	2313	5421	19460	2313	5421	-19460
Wind, 10°C	150C1F1	8522	19719	71422	8522	19719	-71422
Permanent loads yg= 1.2	150C1F2	8522	19671	71415	8522	19671	-71415
Wind angle: 0°	150C1F3	8522	19611	71408	8522	19611	-71408
	380C2F1	0	0	0	17045	39437	-142845
	380C2F2	0	0	0	17045	39342	-142830
	380C2F3	0	0	0	17045	39221	-142815
	RTG	0	0	0	4620	10674	-38843
NL3/1b	GW / opgw	2312	5963	22016	2312	5963	-22016
Wind, -20°C	150C1F1	8518	22161	82039	8518	22161	-82039
Permanent loads yg= 1.2	150C1F2	8518	22147	82040	8518	22147	-82040
Wind angle: 0°	150C1F3	8518	22130	82043	8518	22130	-82043
	380C2F1	0	0	0	17036	44322	-164077
	380C2F2	0	0	0	17036	44295	-164081
	380C2F3	0	0	0	17036	44260	-164085
	RTG	0	0	0	4618	11771	-43625
NL3/3	GW / opgw	3883	8610	30911	3883	8610	-30911
Wind, -5°C	150C1F1	9901	23444	85630	9901	23444	-85630
Permanent loads yg= 1.2	150C1F2	9901	23404	85628	9901	23404	-85628
Wind angle: 0°	150C1F3	9901	23354	85627	9901	23354	-85627
	380C2F1	0	0	0	19802	46887	-171259
	380C2F2	0	0	0	19802	46808	-171256
	380C2F3	0	0	0	19802	46707	-171253
	RTG	0	0	0	7767	16943	-61667
NL3/4	GW / opgw	2915	6463	23882	2915	6463	-23882
Construction/maintenance, +5°C	150C1F1	9725	21883	81000	9725	21883	-81000
Permanent loads yg= 1.2	150C1F2	9725	21869	81002	9725	21869	-81002
Wind angle: 0°	150C1F3	9725	21852	81005	9725	21852	-81005
	380C2F1	0	0	0	19451	43765	-162000
	380C2F2	0	0	0	19451	43738	-162004
	380C2F3	0	0	0	19451	43704	-162010
	RTG	0	0	0	5823	12862	-47696
NL3/1a	GW / opgw	2313	6149	20066	2314	8980	-24860
Wind, 10°C	150C1F1	8523	21624	72609	8524	28843	-83359
Permanent loads yg= 1.2	150C1F2	8523	21397	72397	8524	27877	-81663
Wind angle: 45°	150C1F3	8523	21115	72156	8524	26679	-79631
	380C2F1	0	0	0	17048	57685	-166717
	380C2F2	0	0	0	17048	55754	-163327
	380C2F3	0	0	0	17047	53358	-159262
	RTG	0	0	0	4621	14690	-43701
NL3/1b	GW / opgw	2312	6146	22050	2312	6761	-22572
Wind, -20°C	150C1F1	8518	22659	82076	8518	24266	-83095
Permanent loads yg= 1.2	150C1F2	8518	22603	82063	8518	24058	-82907
Wind angle: 45°	150C1F3	8518	22533	82050	8518	23800	-82693
	380C2F1	0	0	0	17036	48532	-166189
	380C2F2	0	0	0	17036	48117	-165814
	380C2F3	0	0	0	17036	47600	-165386
	RTG	0	0	0	4618	12712	-44021
NL3/3	GW / opgw	3883	9707	31669	3884	13833	-37952
Wind, -5°C	150C1F1	9901	24983	86283	9902	30568	-93216
Permanent loads yg= 1.2	150C1F2	9901	24803	86159	9902	29821	-92068
Wind angle: 45°	150C1F3	9901	24579	86020	9902	28897	-90716
	380C2F1	0	0	0	19805	61135	-186431
	380C2F2	0	0	0	19805	59641	-184137
	380C2F3	0	0	0	19804	57794	-181432
	RTG	0	0	0	7768	22876	-67855
NL3/4	GW / opgw	2915	6640	23894	2915	7208	-24240
Construction/maintenance, +5°C	150C1F1	9725	22373	81008	9726	23915	-81781
Permanent loads yg= 1.2	150C1F2	9725	22319	81000	9725	23718	-81634
Wind angle: 45°	150C1F3	9725	22250	80992	9725	23473	-81468
	380C2F1	0	0	0	19451	47830	-163562
	380C2F2	0	0	0	19451	47436	-163268
	380C2F3	0	0	0	19451	46945	-162935
	RTG	0	0	0	5823	13758	-47923
NL3/1a	GW / opgw	2314	10178	27217	2314	10178	-27217
Wind, 10°C	150C1F1	8525	31968	89093	8525	31968	-89093
Permanent loads yg= 1.2	150C1F2	8525	30695	86719	8525	30695	-86719
Wind angle: 90°	150C1F3	8524	29109	83834	8524	29109	-83834
	380C2F1	0	0	0	17050	63935	-178185
	380C2F2	0	0	0	17049	61390	-173439
	380C2F3	0	0	0	17048	58219	-167668
	RTG	0	0	0	4621	16077	-46164

NL3/1b	GW / opgw	2312	7025	22909	2312	7025	-22909
Wind, -20°C	150C1F1	8518	24939	83786	8518	24939	-83786
Permanent loads yg= 1.2	150C1F2	8518	24664	83489	8518	24664	-83489
Wind angle: 90°	150C1F3	8518	24323	83149	8518	24323	-83149
	380C2F1	0	0	0	17036	49879	-167572
	380C2F2	0	0	0	17036	49328	-166979
	380C2F3	0	0	0	17036	48646	-166297
	RTG	0	0	0	4618	13008	-44292
NL3/3	GW / opgw	3885	15569	41090	3885	15569	-41090
Wind, -5°C	150C1F1	9903	33002	97207	9903	33002	-97207
Permanent loads yg= 1.2	150C1F2	9903	32007	95535	9903	32007	-95535
Wind angle: 90°	150C1F3	9903	30774	93540	9903	30774	-93540
	380C2F1	0	0	0	19806	66003	-194414
	380C2F2	0	0	0	19806	64014	-191070
	380C2F3	0	0	0	19805	61548	-187080
	RTG	0	0	0	7769	24883	-71068
NL3/4	GW / opgw	2915	7446	24476	2915	7446	-24476
Construction/maintenance, +5°C	150C1F1	9726	24550	82329	9726	24550	-82329
Permanent loads yg= 1.2	150C1F2	9726	24291	82093	9726	24291	-82093
Wind angle: 90°	150C1F3	9726	23969	81824	9726	23969	-81824
	380C2F1	0	0	0	19451	49100	-164657
	380C2F2	0	0	0	19451	48582	-164186
	380C2F3	0	0	0	19451	47938	-163647
	RTG	0	0	0	5823	14030	-48105
NL3/1a	GW / opgw	2314	8980	24860	2313	6149	-20066
Wind, 10°C	150C1F1	8524	28843	83359	8523	21624	-72609
Permanent loads yg= 1.2	150C1F2	8524	27877	81663	8523	21397	-72397
Wind angle: -45°	150C1F3	8524	26679	79631	8523	21115	-72156
	380C2F1	0	0	0	17045	43248	-145217
	380C2F2	0	0	0	17045	42794	-144795
	380C2F3	0	0	0	17045	42229	-144312
	RTG	0	0	0	4620	11522	-39293
NL3/1b	GW / opgw	2312	6761	22572	2312	6146	-22050
Wind, -20°C	150C1F1	8518	24266	83095	8518	22659	-82076
Permanent loads yg= 1.2	150C1F2	8518	24058	82907	8518	22603	-82063
Wind angle: -45°	150C1F3	8518	23800	82693	8518	22533	-82050
	380C2F1	0	0	0	17036	45318	-164152
	380C2F2	0	0	0	17036	45207	-164127
	380C2F3	0	0	0	17036	45066	-164100
	RTG	0	0	0	4618	11997	-43633
NL3/3	GW / opgw	3884	13833	37952	3883	9707	-31669
Wind, -5°C	150C1F1	9902	30568	93216	9901	24983	-86283
Permanent loads yg= 1.2	150C1F2	9902	29821	92068	9901	24803	-86159
Wind angle: -45°	150C1F3	9902	28897	90716	9901	24579	-86020
	380C2F1	0	0	0	19803	49966	-172566
	380C2F2	0	0	0	19803	49606	-172319
	380C2F3	0	0	0	19803	49157	-172039
	RTG	0	0	0	7767	18232	-62203
NL3/4	GW / opgw	2915	7208	24240	2915	6640	-23894
Construction/maintenance, +5°C	150C1F1	9726	23915	81781	9725	22373	-81008
Permanent loads yg= 1.2	150C1F2	9725	23718	81634	9725	22319	-81000
Wind angle: -45°	150C1F3	9725	23473	81468	9725	22250	-80992
	380C2F1	0	0	0	19451	44747	-162016
	380C2F2	0	0	0	19451	44637	-162000
	380C2F3	0	0	0	19451	44499	-161985
	RTG	0	0	0	5823	13083	-47686
NL3/1a	GW / opgw	1735	4318	15341	1735	4318	-15341
Wind, 10°C	150C1F1	6390	15727	56526	6390	15727	-56526
Permanent loads yg= 0.9	150C1F2	6390	15677	56510	6390	15677	-56510
Wind angle: 0°	150C1F3	6390	15614	56493	6390	15614	-56493
	380C2F1	0	0	0	12781	31454	-113052
	380C2F2	0	0	0	12781	31354	-113020
	380C2F3	0	0	0	12781	31229	-112987
	RTG	0	0	0	3464	8457	-30569
NL3/1b	GW / opgw	1734	4791	17643	1734	4791	-17643
Wind, -20°C	150C1F1	6387	17949	66319	6387	17949	-66319
Permanent loads yg= 0.9	150C1F2	6387	17935	66319	6387	17935	-66319
Wind angle: 0°	150C1F3	6387	17917	66321	6387	17917	-66321
	380C2F1	0	0	0	12774	35897	-132637
	380C2F2	0	0	0	12774	35870	-132639
	380C2F3	0	0	0	12774	35835	-132641
	RTG	0	0	0	3463	9430	-34888

NL3/3	GW / opgw	3304	7647	27318	3304	7647	-27318
Wind, -5°C	150C1F1	7769	19534	71039	7769	19534	-71039
Permanent loads yg= 0.9	150C1F2	7769	19493	71033	7769	19493	-71033
Wind angle: 0°	150C1F3	7769	19441	71027	7769	19441	-71027
	380C2F1	0	0	0	15538	39068	-142079
	380C2F2	0	0	0	15538	38986	-142066
	380C2F3	0	0	0	15538	38883	-142054
	RTG	0	0	0	6610	15011	-54458
NL3/4	GW / opgw	2336	5417	19980	2336	5417	-19980
Construction/maintenance, +5°C	150C1F1	7593	18004	66526	7593	18004	-66526
Permanent loads yg= 0.9	150C1F2	7593	17991	66527	7593	17991	-66527
Wind angle: 0°	150C1F3	7593	17973	66529	7593	17973	-66529
	380C2F1	0	0	0	15186	36009	-133052
	380C2F2	0	0	0	15186	35981	-133054
	380C2F3	0	0	0	15186	35946	-133059
	RTG	0	0	0	4667	10769	-39885
NL3/1a	GW / opgw	1735	5126	16245	1735	8312	-22368
Wind, 10°C	150C1F1	6391	17810	58375	6392	26006	-72777
Permanent loads yg= 0.9	150C1F2	6391	17555	58061	6392	24920	-70632
Wind angle: 45°	150C1F3	6391	17240	57698	6392	23565	-68013
	380C2F1	0	0	0	12784	52013	-145554
	380C2F2	0	0	0	12784	49840	-141264
	380C2F3	0	0	0	12783	47130	-136026
	RTG	0	0	0	3465	12977	-37311
NL3/1b	GW / opgw	1734	4983	17711	1734	5671	-18504
Wind, -20°C	150C1F1	6387	18466	66429	6387	20232	-68043
Permanent loads yg= 0.9	150C1F2	6387	18407	66405	6387	19999	-67759
Wind angle: 45°	150C1F3	6387	18333	66378	6387	19710	-67430
	380C2F1	0	0	0	12774	40465	-136087
	380C2F2	0	0	0	12774	39998	-135518
	380C2F3	0	0	0	12774	39420	-134861
	RTG	0	0	0	3463	10442	-35549
NL3/3	GW / opgw	3304	8802	28293	3305	13212	-35636
Wind, -5°C	150C1F1	7769	21169	72052	7771	27388	-81353
Permanent loads yg= 0.9	150C1F2	7769	20974	71871	7770	26553	-79875
Wind angle: 45°	150C1F3	7769	20732	71665	7770	25518	-78108
	380C2F1	0	0	0	15541	54776	-162707
	380C2F2	0	0	0	15541	53105	-159750
	380C2F3	0	0	0	15540	51036	-156216
	RTG	0	0	0	6611	21321	-62052
NL3/4	GW / opgw	2336	5599	20009	2336	6206	-20501
Construction/maintenance, +5°C	150C1F1	7593	18508	66582	7593	20156	-67755
Permanent loads yg= 0.9	150C1F2	7593	18451	66566	7593	19942	-67542
Wind angle: 45°	150C1F3	7593	18380	66549	7593	19676	-67299
	380C2F1	0	0	0	15186	40313	-135511
	380C2F2	0	0	0	15186	39884	-135085
	380C2F3	0	0	0	15186	39352	-134597
	RTG	0	0	0	4667	11702	-40251
NL3/1a	GW / opgw	1736	9613	25111	1736	9613	-25111
Wind, 10°C	150C1F1	6393	29481	79817	6393	29481	-79817
Permanent loads yg= 0.9	150C1F2	6393	28073	76939	6393	28073	-76939
Wind angle: 90°	150C1F3	6392	26305	73373	6392	26305	-73373
	380C2F1	0	0	0	12786	58962	-159635
	380C2F2	0	0	0	12785	56147	-153879
	380C2F3	0	0	0	12784	52610	-146746
	RTG	0	0	0	3465	14539	-40424
NL3/1b	GW / opgw	1734	5974	18987	1734	5974	-18987
Wind, -20°C	150C1F1	6387	20997	69074	6387	20997	-69074
Permanent loads yg= 0.9	150C1F2	6387	20683	68635	6387	20683	-68635
Wind angle: 90°	150C1F3	6387	20297	68125	6387	20297	-68125
	380C2F1	0	0	0	12774	41993	-138148
	380C2F2	0	0	0	12774	41367	-137270
	380C2F3	0	0	0	12774	40594	-136250
	RTG	0	0	0	3463	10775	-35958
NL3/3	GW / opgw	3306	15037	39110	3306	15037	-39110
Wind, -5°C	150C1F1	7771	30099	86377	7771	30099	-86377
Permanent loads yg= 0.9	150C1F2	7771	28994	84294	7771	28994	-84294
Wind angle: 90°	150C1F3	7771	27619	81769	7771	27619	-81769
	380C2F1	0	0	0	15542	60198	-172755
	380C2F2	0	0	0	15542	57987	-168588
	380C2F3	0	0	0	15541	55238	-163537
	RTG	0	0	0	6612	23468	-65790

NL3/4	GW / opgw	2336	6466	20820	2336	6466	-20820
Construction/maintenance, +5°C	150C1F1	7593	20854	68536	7593	20854	-68536
Permanent loads yg= 0.9	150C1F2	7593	20569	68202	7593	20569	-68202
Wind angle: 90°	150C1F3	7593	20216	67817	7593	20216	-67817
	380C2F1	0	0	0	15187	41708	-137072
	380C2F2	0	0	0	15187	41137	-136404
	380C2F3	0	0	0	15186	40431	-135633
	RTG	0	0	0	4667	11994	-40507
NL3/1a	GW / opgw	1735	8312	22368	1735	5126	-16245
Wind, 10°C	150C1F1	6392	26006	72777	6391	17810	-58375
Permanent loads yg= 0.9	150C1F2	6392	24920	70632	6391	17555	-58061
Wind angle: -45°	150C1F3	6392	23565	68013	6391	17240	-57698
	380C2F1	0	0	0	12781	35619	-116750
	380C2F2	0	0	0	12781	35110	-116122
	380C2F3	0	0	0	12781	34481	-115397
	RTG	0	0	0	3464	9375	-31283
NL3/1b	GW / opgw	1734	5671	18504	1734	4983	-17711
Wind, -20°C	150C1F1	6387	20232	68043	6387	18466	-66429
Permanent loads yg= 0.9	150C1F2	6387	19999	67759	6387	18407	-66405
Wind angle: -45°	150C1F3	6387	19710	67430	6387	18333	-66378
	380C2F1	0	0	0	12774	36933	-132858
	380C2F2	0	0	0	12774	36815	-132809
	380C2F3	0	0	0	12774	36666	-132755
	RTG	0	0	0	3463	9663	-34924
NL3/3	GW / opgw	3305	13212	35636	3304	8802	-28293
Wind, -5°C	150C1F1	7771	27388	81353	7769	21169	-72052
Permanent loads yg= 0.9	150C1F2	7770	26553	79875	7769	20974	-71871
Wind angle: -45°	150C1F3	7770	25518	78108	7769	20732	-71665
	380C2F1	0	0	0	15539	42338	-144103
	380C2F2	0	0	0	15539	41948	-143742
	380C2F3	0	0	0	15539	41464	-143329
	RTG	0	0	0	6610	16350	-55181
NL3/4	GW / opgw	2336	6206	20501	2336	5599	-20009
Construction/maintenance, +5°C	150C1F1	7593	20156	67755	7593	18508	-66582
Permanent loads yg= 0.9	150C1F2	7593	19942	67542	7593	18451	-66566
Wind angle: -45°	150C1F3	7593	19676	67299	7593	18380	-66549
	380C2F1	0	0	0	15186	37015	-133164
	380C2F2	0	0	0	15186	36902	-133132
	380C2F3	0	0	0	15186	36759	-133099
	RTG	0	0	0	4667	10994	-39889

ZWW4HK400

Loadcases for tower strength (Special limit state)

		Ahead			Back		
Loadcase according to 50341-3-15	Att. Point	Vertical [N]	Transversal [N]	Longitudinal [N]	Vertical [N]	Transversal [N]	Longitudinal [N]
NL3/1a	GW / opgw	2313	5421	19460	0	0	0
Wind, 10°C	150C1F1	8522	19719	71422	0	0	0
Permanent loads yg= 1.2	150C1F2	8522	19671	71415	0	0	0
Wind angle: 0°	150C1F3	8522	19611	71408	0	0	0
	380C2F1	17045	39437	142845	17045	39437	-142845
	380C2F2	17045	39342	142830	17045	39342	-142830
	380C2F3	17045	39221	142815	17045	39221	-142815
	RTG	0	0	0	4620	10674	-38843
NL3/1b	GW / opgw	2312	5963	22016	0	0	0
Wind, -20°C	150C1F1	8518	22161	82039	0	0	0
Permanent loads yg= 1.2	150C1F2	8518	22147	82040	0	0	0
Wind angle: 0°	150C1F3	8518	22130	82043	0	0	0
	380C2F1	17036	44322	164077	17036	44322	-164077
	380C2F2	17036	44295	164081	17036	44295	-164081
	380C2F3	17036	44260	164085	17036	44260	-164085
	RTG	0	0	0	4618	11771	-43625
NL3/3	GW / opgw	3883	8610	30911	0	0	0
Wind, -5°C	150C1F1	9901	23444	85630	0	0	0
Permanent loads yg= 1.2	150C1F2	9901	23404	85628	0	0	0
Wind angle: 0°	150C1F3	9901	23354	85627	0	0	0
	380C2F1	19802	46887	171259	19802	46887	-171259
	380C2F2	19802	46808	171256	19802	46808	-171256
	380C2F3	19802	46707	171253	19802	46707	-171253
	RTG	0	0	0	7767	16943	-61667
NL3/4	GW / opgw	2915	6463	23882	0	0	0
Construction/maintenance, +5°C	150C1F1	9725	21883	81000	0	0	0
Permanent loads yg= 1.2	150C1F2	9725	21869	81002	0	0	0
Wind angle: 0°	150C1F3	9725	21852	81005	0	0	0
	380C2F1	19451	43765	162000	19451	43765	-162000
	380C2F2	19451	43738	162004	19451	43738	-162004
	380C2F3	19451	43704	162010	19451	43704	-162010
	RTG	0	0	0	5823	12862	-47696
NL3/1a	GW / opgw	2313	6149	20066	0	0	0
Wind, 10°C	150C1F1	8523	21624	72609	0	0	0
Permanent loads yg= 1.2	150C1F2	8523	21397	72397	0	0	0
Wind angle: 45°	150C1F3	8523	21115	72156	0	0	0
	380C2F1	17045	43248	145217	17048	57685	-166717
	380C2F2	17045	42794	144795	17048	55754	-163327
	380C2F3	17045	42229	144312	17047	53358	-159262
	RTG	0	0	0	4621	14690	-43701
NL3/1b	GW / opgw	2312	6146	22050	0	0	0
Wind, -20°C	150C1F1	8518	22659	82076	0	0	0
Permanent loads yg= 1.2	150C1F2	8518	22603	82063	0	0	0
Wind angle: 45°	150C1F3	8518	22533	82050	0	0	0
	380C2F1	17036	45318	164152	17036	48532	-166189
	380C2F2	17036	45207	164127	17036	48117	-165814
	380C2F3	17036	45066	164100	17036	47600	-165386
	RTG	0	0	0	4618	12712	-44021
NL3/3	GW / opgw	3883	9707	31669	0	0	0
Wind, -5°C	150C1F1	9901	24983	86283	0	0	0
Permanent loads yg= 1.2	150C1F2	9901	24803	86159	0	0	0
Wind angle: 45°	150C1F3	9901	24579	86020	0	0	0
	380C2F1	19803	49966	172566	19805	61135	-186431
	380C2F2	19803	49606	172319	19805	59641	-184137
	380C2F3	19803	49157	172039	19804	57794	-181432
	RTG	0	0	0	7768	22876	-67855
NL3/4	GW / opgw	2915	6640	23894	0	0	0
Construction/maintenance, +5°C	150C1F1	9725	22373	81008	0	0	0
Permanent loads yg= 1.2	150C1F2	9725	22319	81000	0	0	0
Wind angle: 45°	150C1F3	9725	22250	80992	0	0	0
	380C2F1	19451	44747	162016	19451	47830	-163562
	380C2F2	19451	44637	162000	19451	47436	-163268
	380C2F3	19451	44499	161985	19451	46945	-162935
	RTG	0	0	0	5823	13758	-47923
NL3/1a	GW / opgw	2314	10178	27217	0	0	0
Wind, 10°C	150C1F1	8525	31968	89093	0	0	0
Permanent loads yg= 1.2	150C1F2	8525	30695	86719	0	0	0
Wind angle: 90°	150C1F3	8524	29109	83834	0	0	0
	380C2F1	17050	63935	178185	17050	63935	-178185
	380C2F2	17049	61390	173439	17049	61390	-173439
	380C2F3	17048	58219	167668	17048	58219	-167668
	RTG	0	0	0	4621	16077	-46164

NL3/1b	GW / opgw	2312	7025	22909	0	0	0
Wind, -20°C	150C1F1	8518	24939	83786	0	0	0
Permanent loads yg= 1.2	150C1F2	8518	24664	83489	0	0	0
Wind angle: 90°	150C1F3	8518	24323	83149	0	0	0
	380C2F1	17036	49879	167572	17036	49879	-167572
	380C2F2	17036	49328	166979	17036	49328	-166979
	380C2F3	17036	48646	166297	17036	48646	-166297
	RTG	0	0	0	4618	13008	-44292
NL3/3	GW / opgw	3885	15569	41090	0	0	0
Wind, -5°C	150C1F1	9903	33002	97207	0	0	0
Permanent loads yg= 1.2	150C1F2	9903	32007	95535	0	0	0
Wind angle: 90°	150C1F3	9903	30774	93540	0	0	0
	380C2F1	19806	66003	194414	19806	66003	-194414
	380C2F2	19806	64014	191070	19806	64014	-191070
	380C2F3	19805	61548	187080	19805	61548	-187080
	RTG	0	0	0	7769	24883	-71068
NL3/4	GW / opgw	2915	7446	24476	0	0	0
Construction/maintenance, +5°C	150C1F1	9726	24550	82329	0	0	0
Permanent loads yg= 1.2	150C1F2	9726	24291	82093	0	0	0
Wind angle: 90°	150C1F3	9726	23969	81824	0	0	0
	380C2F1	19451	49100	164657	19451	49100	-164657
	380C2F2	19451	48582	164186	19451	48582	-164186
	380C2F3	19451	47938	163647	19451	47938	-163647
	RTG	0	0	0	5823	14030	-48105
NL3/1a	GW / opgw	2314	8980	24860	0	0	0
Wind, 10°C	150C1F1	8524	28843	83359	0	0	0
Permanent loads yg= 1.2	150C1F2	8524	27877	81663	0	0	0
Wind angle: -45°	150C1F3	8524	26679	79631	0	0	0
	380C2F1	17048	57685	166717	17045	43248	-145217
	380C2F2	17048	55754	163327	17045	42794	-144795
	380C2F3	17047	53358	159262	17045	42229	-144312
	RTG	0	0	0	4620	11522	-39293
NL3/1b	GW / opgw	2312	6761	22572	0	0	0
Wind, -20°C	150C1F1	8518	24266	83095	0	0	0
Permanent loads yg= 1.2	150C1F2	8518	24058	82907	0	0	0
Wind angle: -45°	150C1F3	8518	23800	82693	0	0	0
	380C2F1	17036	48532	166189	17036	45318	-164152
	380C2F2	17036	48117	165814	17036	45207	-164127
	380C2F3	17036	47600	165386	17036	45066	-164100
	RTG	0	0	0	4618	11997	-43633
NL3/3	GW / opgw	3884	13833	37952	0	0	0
Wind, -5°C	150C1F1	9902	30568	93216	0	0	0
Permanent loads yg= 1.2	150C1F2	9902	29821	92068	0	0	0
Wind angle: -45°	150C1F3	9902	28897	90716	0	0	0
	380C2F1	19805	61135	186431	19803	49966	-172566
	380C2F2	19805	59641	184137	19803	49606	-172319
	380C2F3	19804	57794	181432	19803	49157	-172039
	RTG	0	0	0	7767	18232	-62203
NL3/4	GW / opgw	2915	7208	24240	0	0	0
Construction/maintenance, +5°C	150C1F1	9726	23915	81781	0	0	0
Permanent loads yg= 1.2	150C1F2	9725	23718	81634	0	0	0
Wind angle: -45°	150C1F3	9725	23473	81468	0	0	0
	380C2F1	19451	47830	163562	19451	44747	-162016
	380C2F2	19451	47436	163268	19451	44637	-162000
	380C2F3	19451	46945	162935	19451	44499	-161985
	RTG	0	0	0	5823	13083	-47686
NL3/1a	GW / opgw	1735	4318	15341	0	0	0
Wind, 10°C	150C1F1	6390	15727	56526	0	0	0
Permanent loads yg= 0.9	150C1F2	6390	15677	56510	0	0	0
Wind angle: 0°	150C1F3	6390	15614	56493	0	0	0
	380C2F1	12781	31454	113052	12781	31454	-113052
	380C2F2	12781	31354	113020	12781	31354	-113020
	380C2F3	12781	31229	112987	12781	31229	-112987
	RTG	0	0	0	3464	8457	-30569
NL3/1b	GW / opgw	1734	4791	17643	0	0	0
Wind, -20°C	150C1F1	6387	17949	66319	0	0	0
Permanent loads yg= 0.9	150C1F2	6387	17935	66319	0	0	0
Wind angle: 0°	150C1F3	6387	17917	66321	0	0	0
	380C2F1	12774	35897	132637	12774	35897	-132637
	380C2F2	12774	35870	132639	12774	35870	-132639
	380C2F3	12774	35835	132641	12774	35835	-132641
	RTG	0	0	0	3463	9430	-34888

NL3/3	GW / opgw	3304	7647	27318	0	0	0
Wind, -5°C	150C1F1	7769	19534	71039	0	0	0
Permanent loads yg= 0.9	150C1F2	7769	19493	71033	0	0	0
Wind angle: 0°	150C1F3	7769	19441	71027	0	0	0
	380C2F1	15538	39068	142079	15538	39068	-142079
	380C2F2	15538	38986	142066	15538	38986	-142066
	380C2F3	15538	38883	142054	15538	38883	-142054
	RTG	0	0	0	6610	15011	-54458
NL3/4	GW / opgw	2336	5417	19980	0	0	0
Construction/maintenance, +5°C	150C1F1	7593	18004	66526	0	0	0
Permanent loads yg= 0.9	150C1F2	7593	17991	66527	0	0	0
Wind angle: 0°	150C1F3	7593	17973	66529	0	0	0
	380C2F1	15186	36009	133052	15186	36009	-133052
	380C2F2	15186	35981	133054	15186	35981	-133054
	380C2F3	15186	35946	133059	15186	35946	-133059
	RTG	0	0	0	4667	10769	-39885
NL3/1a	GW / opgw	1735	5126	16245	0	0	0
Wind, 10°C	150C1F1	6391	17810	58375	0	0	0
Permanent loads yg= 0.9	150C1F2	6391	17555	58061	0	0	0
Wind angle: 45°	150C1F3	6391	17240	57698	0	0	0
	380C2F1	12781	35619	116750	12784	52013	-145554
	380C2F2	12781	35110	116122	12784	49840	-141264
	380C2F3	12781	34481	115397	12783	47130	-136026
	RTG	0	0	0	3465	12977	-37311
NL3/1b	GW / opgw	1734	4983	17711	0	0	0
Wind, -20°C	150C1F1	6387	18466	66429	0	0	0
Permanent loads yg= 0.9	150C1F2	6387	18407	66405	0	0	0
Wind angle: 45°	150C1F3	6387	18333	66378	0	0	0
	380C2F1	12774	36933	132858	12774	40465	-136087
	380C2F2	12774	36815	132809	12774	39998	-135518
	380C2F3	12774	36666	132755	12774	39420	-134861
	RTG	0	0	0	3463	10442	-35549
NL3/3	GW / opgw	3304	8802	28293	0	0	0
Wind, -5°C	150C1F1	7769	21169	72052	0	0	0
Permanent loads yg= 0.9	150C1F2	7769	20974	71871	0	0	0
Wind angle: 45°	150C1F3	7769	20732	71665	0	0	0
	380C2F1	15539	42338	144103	15541	54776	-162707
	380C2F2	15539	41948	143742	15541	53105	-159750
	380C2F3	15539	41464	143329	15540	51036	-156216
	RTG	0	0	0	6611	21321	-62052
NL3/4	GW / opgw	2336	5599	20009	0	0	0
Construction/maintenance, +5°C	150C1F1	7593	18508	66582	0	0	0
Permanent loads yg= 0.9	150C1F2	7593	18451	66566	0	0	0
Wind angle: 45°	150C1F3	7593	18380	66549	0	0	0
	380C2F1	15186	37015	133164	15186	40313	-135511
	380C2F2	15186	36902	133132	15186	39884	-135085
	380C2F3	15186	36759	133099	15186	39352	-134597
	RTG	0	0	0	4667	11702	-40251
NL3/1a	GW / opgw	1736	9613	25111	0	0	0
Wind, 10°C	150C1F1	6393	29481	79817	0	0	0
Permanent loads yg= 0.9	150C1F2	6393	28073	76939	0	0	0
Wind angle: 90°	150C1F3	6392	26305	73373	0	0	0
	380C2F1	12786	58962	159635	12786	58962	-159635
	380C2F2	12785	56147	153879	12785	56147	-153879
	380C2F3	12784	52610	146746	12784	52610	-146746
	RTG	0	0	0	3465	14539	-40424
NL3/1b	GW / opgw	1734	5974	18987	0	0	0
Wind, -20°C	150C1F1	6387	20997	69074	0	0	0
Permanent loads yg= 0.9	150C1F2	6387	20683	68635	0	0	0
Wind angle: 90°	150C1F3	6387	20297	68125	0	0	0
	380C2F1	12774	41993	138148	12774	41993	-138148
	380C2F2	12774	41367	137270	12774	41367	-137270
	380C2F3	12774	40594	136250	12774	40594	-136250
	RTG	0	0	0	3463	10775	-35958
NL3/3	GW / opgw	3306	15037	39110	0	0	0
Wind, -5°C	150C1F1	7771	30099	86377	0	0	0
Permanent loads yg= 0.9	150C1F2	7771	28994	84294	0	0	0
Wind angle: 90°	150C1F3	7771	27619	81769	0	0	0
	380C2F1	15542	60198	172755	15542	60198	-172755
	380C2F2	15542	57987	168588	15542	57987	-168588
	380C2F3	15541	55238	163537	15541	55238	-163537
	RTG	0	0	0	6612	23468	-65790

NL3/4	GW / opgw	2336	6466	20820	0	0	0
Construction/maintenance, +5°C	150C1F1	7593	20854	68536	0	0	0
Permanent loads yg= 0.9	150C1F2	7593	20569	68202	0	0	0
Wind angle: 90°	150C1F3	7593	20216	67817	0	0	0
	380C2F1	15187	41708	137072	15187	41708	-137072
	380C2F2	15187	41137	136404	15187	41137	-136404
	380C2F3	15186	40431	135633	15186	40431	-135633
	RTG	0	0	0	4667	11994	-40507
NL3/1a	GW / opgw	1735	8312	22368	0	0	0
Wind, 10°C	150C1F1	6392	26006	72777	0	0	0
Permanent loads yg= 0.9	150C1F2	6392	24920	70632	0	0	0
Wind angle: -45°	150C1F3	6392	23565	68013	0	0	0
	380C2F1	12784	52013	145554	12781	35619	-116750
	380C2F2	12784	49840	141264	12781	35110	-116122
	380C2F3	12783	47130	136026	12781	34481	-115397
	RTG	0	0	0	3464	9375	-31283
NL3/1b	GW / opgw	1734	5671	18504	0	0	0
Wind, -20°C	150C1F1	6387	20232	68043	0	0	0
Permanent loads yg= 0.9	150C1F2	6387	19999	67759	0	0	0
Wind angle: -45°	150C1F3	6387	19710	67430	0	0	0
	380C2F1	12774	40465	136087	12774	36933	-132858
	380C2F2	12774	39998	135518	12774	36815	-132809
	380C2F3	12774	39420	134861	12774	36666	-132755
	RTG	0	0	0	3463	9663	-34924
NL3/3	GW / opgw	3305	13212	35636	0	0	0
Wind, -5°C	150C1F1	7771	27388	81353	0	0	0
Permanent loads yg= 0.9	150C1F2	7770	26553	79875	0	0	0
Wind angle: -45°	150C1F3	7770	25518	78108	0	0	0
	380C2F1	15541	54776	162707	15539	42338	-144103
	380C2F2	15541	53105	159750	15539	41948	-143742
	380C2F3	15540	51036	156216	15539	41464	-143329
	RTG	0	0	0	6610	16350	-55181
NL3/4	GW / opgw	2336	6206	20501	0	0	0
Construction/maintenance, +5°C	150C1F1	7593	20156	67755	0	0	0
Permanent loads yg= 0.9	150C1F2	7593	19942	67542	0	0	0
Wind angle: -45°	150C1F3	7593	19676	67299	0	0	0
	380C2F1	15186	40313	135511	15186	37015	-133164
	380C2F2	15186	39884	135085	15186	36902	-133132
	380C2F3	15186	39352	134597	15186	36759	-133099
	RTG	0	0	0	4667	10994	-39889

ZWW4HK400

Loadcases for tower strength (Special limit state)

		Ahead			Back		
Loadcase according to 50341-3-15	Att. Point	Vertical [N]	Transversal [N]	Longitudinal [N]	Vertical [N]	Transversal [N]	Longitudinal [N]
NL3/1a	GW / opgw	2313	5421	19460	2313	5421	-19460
Wind, 10°C	150C1F1	8522	19719	71422	8522	19719	-71422
Permanent loads yg= 1.2	150C1F2	8522	19671	71415	8522	19671	-71415
Wind angle: 0°	150C1F3	8522	19611	71408	8522	19611	-71408
	380C2F1	17045	39437	142845	17045	39437	-142845
	380C2F2	17045	39342	142830	17045	39342	-142830
	380C2F3	17045	39221	142815	17045	39221	-142815
	RTG	0	0	0	4620	10674	-38843
NL3/1b	GW / opgw	2312	5963	22016	2312	5963	-22016
Wind, -20°C	150C1F1	8518	22161	82039	8518	22161	-82039
Permanent loads yg= 1.2	150C1F2	8518	22147	82040	8518	22147	-82040
Wind angle: 0°	150C1F3	8518	22130	82043	8518	22130	-82043
	380C2F1	17036	44322	164077	17036	44322	-164077
	380C2F2	17036	44295	164081	17036	44295	-164081
	380C2F3	17036	44260	164085	17036	44260	-164085
	RTG	0	0	0	4618	11771	-43625
NL3/3	GW / opgw	3883	8610	30911	3883	8610	-30911
Wind, -5°C	150C1F1	9901	23444	85630	9901	23444	-85630
Permanent loads yg= 1.2	150C1F2	9901	23404	85628	9901	23404	-85628
Wind angle: 0°	150C1F3	9901	23354	85627	9901	23354	-85627
	380C2F1	19802	46887	171259	19802	46887	-171259
	380C2F2	19802	46808	171256	19802	46808	-171256
	380C2F3	19802	46707	171253	19802	46707	-171253
	RTG	0	0	0	7767	16943	-61667
NL3/4	GW / opgw	2915	6463	23882	2915	6463	-23882
Construction/maintenance, +5°C	150C1F1	9725	21883	81000	9725	21883	-81000
Permanent loads yg= 1.2	150C1F2	9725	21869	81002	9725	21869	-81002
Wind angle: 0°	150C1F3	9725	21852	81005	9725	21852	-81005
	380C2F1	19451	43765	162000	19451	43765	-162000
	380C2F2	19451	43738	162004	19451	43738	-162004
	380C2F3	19451	43704	162010	19451	43704	-162010
	RTG	0	0	0	5823	12862	-47696
NL3/1a	GW / opgw	2313	6149	20066	2314	8980	-24860
Wind, 10°C	150C1F1	8523	21624	72609	8524	28843	-83359
Permanent loads yg= 1.2	150C1F2	8523	21397	72397	8524	27877	-81663
Wind angle: 45°	150C1F3	8523	21115	72156	8524	26679	-79631
	380C2F1	17045	43248	145217	17048	57685	-166717
	380C2F2	17045	42794	144795	17048	55754	-163327
	380C2F3	17045	42229	144312	17047	53358	-159262
	RTG	0	0	0	4621	14690	-43701
NL3/1b	GW / opgw	2312	6146	22050	2312	6761	-22572
Wind, -20°C	150C1F1	8518	22659	82076	8518	24266	-83095
Permanent loads yg= 1.2	150C1F2	8518	22603	82063	8518	24058	-82907
Wind angle: 45°	150C1F3	8518	22533	82050	8518	23800	-82693
	380C2F1	17036	45318	164152	17036	48532	-166189
	380C2F2	17036	45207	164127	17036	48117	-165814
	380C2F3	17036	45066	164100	17036	47600	-165386
	RTG	0	0	0	4618	12712	-44021
NL3/3	GW / opgw	3883	9707	31669	3884	13833	-37952
Wind, -5°C	150C1F1	9901	24983	86283	9902	30568	-93216
Permanent loads yg= 1.2	150C1F2	9901	24803	86159	9902	29821	-92068
Wind angle: 45°	150C1F3	9901	24579	86020	9902	28897	-90716
	380C2F1	19803	49966	172566	19805	61135	-186431
	380C2F2	19803	49606	172319	19805	59641	-184137
	380C2F3	19803	49157	172039	19804	57794	-181432
	RTG	0	0	0	7768	22876	-67855
NL3/4	GW / opgw	2915	6640	23894	2915	7208	-24240
Construction/maintenance, +5°C	150C1F1	9725	22373	81008	9726	23915	-81781
Permanent loads yg= 1.2	150C1F2	9725	22319	81000	9725	23718	-81634
Wind angle: 45°	150C1F3	9725	22250	80992	9725	23473	-81468
	380C2F1	19451	44747	162016	19451	47830	-163562
	380C2F2	19451	44637	162000	19451	47436	-163268
	380C2F3	19451	44499	161985	19451	46945	-162935
	RTG	0	0	0	5823	13758	-47923
NL3/1a	GW / opgw	2314	10178	27217	2314	10178	-27217
Wind, 10°C	150C1F1	8525	31968	89093	8525	31968	-89093
Permanent loads yg= 1.2	150C1F2	8525	30695	86719	8525	30695	-86719
Wind angle: 90°	150C1F3	8524	29109	83834	8524	29109	-83834
	380C2F1	17050	63935	178185	17050	63935	-178185
	380C2F2	17049	61390	173439	17049	61390	-173439
	380C2F3	17048	58219	167668	17048	58219	-167668
	RTG	0	0	0	4621	16077	-46164

NL3/1b	GW / opgw	2312	7025	22909	2312	7025	-22909
Wind, -20°C	150C1F1	8518	24939	83786	8518	24939	-83786
Permanent loads yg= 1.2	150C1F2	8518	24664	83489	8518	24664	-83489
Wind angle: 90°	150C1F3	8518	24323	83149	8518	24323	-83149
	380C2F1	17036	49879	167572	17036	49879	-167572
	380C2F2	17036	49328	166979	17036	49328	-166979
	380C2F3	17036	48646	166297	17036	48646	-166297
	RTG	0	0	0	4618	13008	-44292
NL3/3	GW / opgw	3885	15569	41090	3885	15569	-41090
Wind, -5°C	150C1F1	9903	33002	97207	9903	33002	-97207
Permanent loads yg= 1.2	150C1F2	9903	32007	95535	9903	32007	-95535
Wind angle: 90°	150C1F3	9903	30774	93540	9903	30774	-93540
	380C2F1	19806	66003	194414	19806	66003	-194414
	380C2F2	19806	64014	191070	19806	64014	-191070
	380C2F3	19805	61548	187080	19805	61548	-187080
	RTG	0	0	0	7769	24883	-71068
NL3/4	GW / opgw	2915	7446	24476	2915	7446	-24476
Construction/maintenance, +5°C	150C1F1	9726	24550	82329	9726	24550	-82329
Permanent loads yg= 1.2	150C1F2	9726	24291	82093	9726	24291	-82093
Wind angle: 90°	150C1F3	9726	23969	81824	9726	23969	-81824
	380C2F1	19451	49100	164657	19451	49100	-164657
	380C2F2	19451	48582	164186	19451	48582	-164186
	380C2F3	19451	47938	163647	19451	47938	-163647
	RTG	0	0	0	5823	14030	-48105
NL3/1a	GW / opgw	2314	8980	24860	2313	6149	-20066
Wind, 10°C	150C1F1	8524	28843	83359	8523	21624	-72609
Permanent loads yg= 1.2	150C1F2	8524	27877	81663	8523	21397	-72397
Wind angle: -45°	150C1F3	8524	26679	79631	8523	21115	-72156
	380C2F1	17048	57685	166717	17045	43248	-145217
	380C2F2	17048	55754	163327	17045	42794	-144795
	380C2F3	17047	53358	159262	17045	42229	-144312
	RTG	0	0	0	4620	11522	-39293
NL3/1b	GW / opgw	2312	6761	22572	2312	6146	-22050
Wind, -20°C	150C1F1	8518	24266	83095	8518	22659	-82076
Permanent loads yg= 1.2	150C1F2	8518	24058	82907	8518	22603	-82063
Wind angle: -45°	150C1F3	8518	23800	82693	8518	22533	-82050
	380C2F1	17036	48532	166189	17036	45318	-164152
	380C2F2	17036	48117	165814	17036	45207	-164127
	380C2F3	17036	47600	165386	17036	45066	-164100
	RTG	0	0	0	4618	11997	-43633
NL3/3	GW / opgw	3884	13833	37952	3883	9707	-31669
Wind, -5°C	150C1F1	9902	30568	93216	9901	24983	-86283
Permanent loads yg= 1.2	150C1F2	9902	29821	92068	9901	24803	-86159
Wind angle: -45°	150C1F3	9902	28897	90716	9901	24579	-86020
	380C2F1	19805	61135	186431	19803	49966	-172566
	380C2F2	19805	59641	184137	19803	49606	-172319
	380C2F3	19804	57794	181432	19803	49157	-172039
	RTG	0	0	0	7767	18232	-62203
NL3/4	GW / opgw	2915	7208	24240	2915	6640	-23894
Construction/maintenance, +5°C	150C1F1	9726	23915	81781	9725	22373	-81008
Permanent loads yg= 1.2	150C1F2	9725	23718	81634	9725	22319	-81000
Wind angle: -45°	150C1F3	9725	23473	81468	9725	22250	-80992
	380C2F1	19451	47830	163562	19451	44747	-162016
	380C2F2	19451	47436	163268	19451	44637	-162000
	380C2F3	19451	46945	162935	19451	44499	-161985
	RTG	0	0	0	5823	13083	-47686
NL3/1a	GW / opgw	1735	4318	15341	1735	4318	-15341
Wind, 10°C	150C1F1	6390	15727	56526	6390	15727	-56526
Permanent loads yg= 0.9	150C1F2	6390	15677	56510	6390	15677	-56510
Wind angle: 0°	150C1F3	6390	15614	56493	6390	15614	-56493
	380C2F1	12781	31454	113052	12781	31454	-113052
	380C2F2	12781	31354	113020	12781	31354	-113020
	380C2F3	12781	31229	112987	12781	31229	-112987
	RTG	0	0	0	3464	8457	-30569
NL3/1b	GW / opgw	1734	4791	17643	1734	4791	-17643
Wind, -20°C	150C1F1	6387	17949	66319	6387	17949	-66319
Permanent loads yg= 0.9	150C1F2	6387	17935	66319	6387	17935	-66319
Wind angle: 0°	150C1F3	6387	17917	66321	6387	17917	-66321
	380C2F1	12774	35897	132637	12774	35897	-132637
	380C2F2	12774	35870	132639	12774	35870	-132639
	380C2F3	12774	35835	132641	12774	35835	-132641
	RTG	0	0	0	3463	9430	-34888

NL3/3	GW / opgw	3304	7647	27318	3304	7647	-27318
Wind, -5°C	150C1F1	7769	19534	71039	7769	19534	-71039
Permanent loads yg= 0.9	150C1F2	7769	19493	71033	7769	19493	-71033
Wind angle: 0°	150C1F3	7769	19441	71027	7769	19441	-71027
	380C2F1	15538	39068	142079	15538	39068	-142079
	380C2F2	15538	38986	142066	15538	38986	-142066
	380C2F3	15538	38883	142054	15538	38883	-142054
	RTG	0	0	0	6610	15011	-54458
NL3/4	GW / opgw	2336	5417	19980	2336	5417	-19980
Construction/maintenance, +5°C	150C1F1	7593	18004	66526	7593	18004	-66526
Permanent loads yg= 0.9	150C1F2	7593	17991	66527	7593	17991	-66527
Wind angle: 0°	150C1F3	7593	17973	66529	7593	17973	-66529
	380C2F1	15186	36009	133052	15186	36009	-133052
	380C2F2	15186	35981	133054	15186	35981	-133054
	380C2F3	15186	35946	133059	15186	35946	-133059
	RTG	0	0	0	4667	10769	-39885
NL3/1a	GW / opgw	1735	5126	16245	1735	8312	-22368
Wind, 10°C	150C1F1	6391	17810	58375	6392	26006	-72777
Permanent loads yg= 0.9	150C1F2	6391	17555	58061	6392	24920	-70632
Wind angle: 45°	150C1F3	6391	17240	57698	6392	23565	-68013
	380C2F1	12781	35619	116750	12784	52013	-145554
	380C2F2	12781	35110	116122	12784	49840	-141264
	380C2F3	12781	34481	115397	12783	47130	-136026
	RTG	0	0	0	3465	12977	-37311
NL3/1b	GW / opgw	1734	4983	17711	1734	5671	-18504
Wind, -20°C	150C1F1	6387	18466	66429	6387	20232	-68043
Permanent loads yg= 0.9	150C1F2	6387	18407	66405	6387	19999	-67759
Wind angle: 45°	150C1F3	6387	18333	66378	6387	19710	-67430
	380C2F1	12774	36933	132858	12774	40465	-136087
	380C2F2	12774	36815	132809	12774	39998	-135518
	380C2F3	12774	36666	132755	12774	39420	-134861
	RTG	0	0	0	3463	10442	-35549
NL3/3	GW / opgw	3304	8802	28293	3305	13212	-35636
Wind, -5°C	150C1F1	7769	21169	72052	7771	27388	-81353
Permanent loads yg= 0.9	150C1F2	7769	20974	71871	7770	26553	-79875
Wind angle: 45°	150C1F3	7769	20732	71665	7770	25518	-78108
	380C2F1	15539	42338	144103	15541	54776	-162707
	380C2F2	15539	41948	143742	15541	53105	-159750
	380C2F3	15539	41464	143329	15540	51036	-156216
	RTG	0	0	0	6611	21321	-62052
NL3/4	GW / opgw	2336	5599	20009	2336	6206	-20501
Construction/maintenance, +5°C	150C1F1	7593	18508	66582	7593	20156	-67755
Permanent loads yg= 0.9	150C1F2	7593	18451	66566	7593	19942	-67542
Wind angle: 45°	150C1F3	7593	18380	66549	7593	19676	-67299
	380C2F1	15186	37015	133164	15186	40313	-135511
	380C2F2	15186	36902	133132	15186	39884	-135085
	380C2F3	15186	36759	133099	15186	39352	-134597
	RTG	0	0	0	4667	11702	-40251
NL3/1a	GW / opgw	1736	9613	25111	1736	9613	-25111
Wind, 10°C	150C1F1	6393	29481	79817	6393	29481	-79817
Permanent loads yg= 0.9	150C1F2	6393	28073	76939	6393	28073	-76939
Wind angle: 90°	150C1F3	6392	26305	73373	6392	26305	-73373
	380C2F1	12786	58962	159635	12786	58962	-159635
	380C2F2	12785	56147	153879	12785	56147	-153879
	380C2F3	12784	52610	146746	12784	52610	-146746
	RTG	0	0	0	3465	14539	-40424
NL3/1b	GW / opgw	1734	5974	18987	1734	5974	-18987
Wind, -20°C	150C1F1	6387	20997	69074	6387	20997	-69074
Permanent loads yg= 0.9	150C1F2	6387	20683	68635	6387	20683	-68635
Wind angle: 90°	150C1F3	6387	20297	68125	6387	20297	-68125
	380C2F1	12774	41993	138148	12774	41993	-138148
	380C2F2	12774	41367	137270	12774	41367	-137270
	380C2F3	12774	40594	136250	12774	40594	-136250
	RTG	0	0	0	3463	10775	-35958
NL3/3	GW / opgw	3306	15037	39110	3306	15037	-39110
Wind, -5°C	150C1F1	7771	30099	86377	7771	30099	-86377
Permanent loads yg= 0.9	150C1F2	7771	28994	84294	7771	28994	-84294
Wind angle: 90°	150C1F3	7771	27619	81769	7771	27619	-81769
	380C2F1	15542	60198	172755	15542	60198	-172755
	380C2F2	15542	57987	168588	15542	57987	-168588
	380C2F3	15541	55238	163537	15541	55238	-163537
	RTG	0	0	0	6612	23468	-65790

NL3/4	GW / opgw	2336	6466	20820	2336	6466	-20820
Construction/maintenance, +5°C	150C1F1	7593	20854	68536	7593	20854	-68536
Permanent loads yg= 0.9	150C1F2	7593	20569	68202	7593	20569	-68202
Wind angle: 90°	150C1F3	7593	20216	67817	7593	20216	-67817
	380C2F1	15187	41708	137072	15187	41708	-137072
	380C2F2	15187	41137	136404	15187	41137	-136404
	380C2F3	15186	40431	135633	15186	40431	-135633
	RTG	0	0	0	4667	11994	-40507
NL3/1a	GW / opgw	1735	8312	22368	1735	5126	-16245
Wind, 10°C	150C1F1	6392	26006	72777	6391	17810	-58375
Permanent loads yg= 0.9	150C1F2	6392	24920	70632	6391	17555	-58061
Wind angle: -45°	150C1F3	6392	23565	68013	6391	17240	-57698
	380C2F1	12784	52013	145554	12781	35619	-116750
	380C2F2	12784	49840	141264	12781	35110	-116122
	380C2F3	12783	47130	136026	12781	34481	-115397
	RTG	0	0	0	3464	9375	-31283
NL3/1b	GW / opgw	1734	5671	18504	1734	4983	-17711
Wind, -20°C	150C1F1	6387	20232	68043	6387	18466	-66429
Permanent loads yg= 0.9	150C1F2	6387	19999	67759	6387	18407	-66405
Wind angle: -45°	150C1F3	6387	19710	67430	6387	18333	-66378
	380C2F1	12774	40465	136087	12774	36933	-132858
	380C2F2	12774	39998	135518	12774	36815	-132809
	380C2F3	12774	39420	134861	12774	36666	-132755
	RTG	0	0	0	3463	9663	-34924
NL3/3	GW / opgw	3305	13212	35636	3304	8802	-28293
Wind, -5°C	150C1F1	7771	27388	81353	7769	21169	-72052
Permanent loads yg= 0.9	150C1F2	7770	26553	79875	7769	20974	-71871
Wind angle: -45°	150C1F3	7770	25518	78108	7769	20732	-71665
	380C2F1	15541	54776	162707	15539	42338	-144103
	380C2F2	15541	53105	159750	15539	41948	-143742
	380C2F3	15540	51036	156216	15539	41464	-143329
	RTG	0	0	0	6610	16350	-55181
NL3/4	GW / opgw	2336	6206	20501	2336	5599	-20009
Construction/maintenance, +5°C	150C1F1	7593	20156	67755	7593	18508	-66582
Permanent loads yg= 0.9	150C1F2	7593	19942	67542	7593	18451	-66566
Wind angle: -45°	150C1F3	7593	19676	67299	7593	18380	-66549
	380C2F1	15186	40313	135511	15186	37015	-133164
	380C2F2	15186	39884	135085	15186	36902	-133132
	380C2F3	15186	39352	134597	15186	36759	-133099
	RTG	0	0	0	4667	10994	-39889

ZWW4HK400

Loadcases for tower strength (serviceability limit state)

		Ahead			Back		
Loadcase according to 50341-3-15	Att. Point	Vertical [N]	Transversal [N]	Longitudinal [N]	Vertical [N]	Transversal [N]	Longitudinal [N]
NL4/1a	GW / opgw	1928	4761	16779	1928	4761	-16779
Wind, 10°C	150C1F1	7101	17271	61676	7101	17271	-61676
Permanent loads yg= 1.0	150C1F2	7101	17206	61652	7101	17206	-61652
Wind angle: 0°	150C1F3	7101	17124	61626	7101	17124	-61626
	380C2F1	14202	34542	123352	14202	34542	-123352
	380C2F2	14202	34412	123304	14202	34412	-123304
	380C2F3	14202	34248	123251	14202	34248	-123251
	RTG	0	0	0	3850	9294	-33413
NL4/1b	GW / opgw	1927	5183	19144	1927	5183	-19144
Wind, -20°C	150C1F1	7097	19367	71723	7097	19367	-71723
Permanent loads yg= 1.0	150C1F2	7097	19356	71724	7097	19356	-71724
Wind angle: 0°	150C1F3	7097	19341	71726	7097	19341	-71726
	380C2F1	14194	38734	143446	14194	38734	-143446
	380C2F2	14194	38711	143449	14194	38711	-143449
	380C2F3	14194	38682	143453	14194	38682	-143453
	RTG	0	0	0	3848	10220	-37886
NL4/3	GW / opgw	6603	12605	46025	6603	12605	-46025
Wind, -5°C	150C1F1	11209	25633	94110	11209	25633	-94110
Permanent loads yg= 1.0	150C1F2	11209	25601	94112	11209	25601	-94112
Wind angle: 0°	150C1F3	11209	25559	94114	11209	25559	-94114
	380C2F1	22419	51266	188221	22419	51266	-188221
	380C2F2	22419	51201	188223	22419	51201	-188223
	380C2F3	22419	51119	188228	22419	51119	-188228
	RTG	0	0	0	13222	25028	-92102
NL4/4	GW / opgw	2429	5579	20622	2429	5579	-20622
Construction/maintenance, +5°C	150C1F1	8103	18929	70087	8103	18929	-70087
Permanent loads yg= 1.0	150C1F2	8103	18917	70088	8103	18917	-70088
Wind angle: 0°	150C1F3	8103	18903	70090	8103	18903	-70090
	380C2F1	16206	37857	140173	16206	37857	-140173
	380C2F2	16206	37835	140176	16206	37835	-140176
	380C2F3	16206	37806	140181	16206	37806	-140181
	RTG	0	0	0	4852	11099	-41168
NL4/1a	GW / opgw	1928	5835	18079	1928	9991	-26190
Wind, 10°C	150C1F1	7101	20026	64364	7104	30812	-83859
Permanent loads yg= 1.0	150C1F2	7101	19687	63915	7103	29403	-81049
Wind angle: 45°	150C1F3	7101	19269	63394	7103	27637	-77583
	380C2F1	14203	40052	128727	14207	61624	-167718
	380C2F2	14203	39375	127830	14206	58806	-162097
	380C2F3	14202	38537	126788	14206	55274	-155165
	RTG	0	0	0	3850	15277	-42756
NL4/1b	GW / opgw	1927	5336	19175	1927	5857	-19641
Wind, -20°C	150C1F1	7097	19784	71762	7097	21141	-72678
Permanent loads yg= 1.0	150C1F2	7097	19737	71750	7097	20965	-72511
Wind angle: 45°	150C1F3	7097	19678	71738	7097	20747	-72319
	380C2F1	14194	39569	143525	14195	42282	-145357
	380C2F2	14194	39475	143501	14195	41930	-145022
	380C2F3	14194	39357	143476	14194	41493	-144639
	RTG	0	0	0	3848	11011	-38244
NL4/3	GW / opgw	6603	13394	46187	6604	16051	-48504
Wind, -5°C	150C1F1	11209	26852	94417	11210	31048	-98485
Permanent loads yg= 1.0	150C1F2	11209	26712	94351	11210	30494	-97782
Wind angle: 45°	150C1F3	11209	26537	94279	11210	29807	-96965
	380C2F1	22419	53704	188833	22420	62096	-196970
	380C2F2	22419	53425	188703	22420	60987	-195564
	380C2F3	22419	53074	188559	22420	59614	-193930
	RTG	0	0	0	13222	29079	-93915
NL4/4	GW / opgw	2429	5727	20634	2429	6206	-20942
Construction/maintenance, +5°C	150C1F1	8103	19339	70099	8103	20637	-70792
Permanent loads yg= 1.0	150C1F2	8103	19293	70091	8103	20470	-70662
Wind angle: 45°	150C1F3	8103	19235	70084	8103	20263	-70513
	380C2F1	16206	38678	140198	16207	41273	-141585
	380C2F2	16206	38586	140183	16206	40941	-141323
	380C2F3	16206	38471	140168	16206	40527	-141027
	RTG	0	0	0	4852	11850	-41375
NL4/1a	GW / opgw	1929	11643	29647	1929	11643	-29647
Wind, 10°C	150C1F1	7105	35283	92941	7105	35283	-92941
Permanent loads yg= 1.0	150C1F2	7104	33478	89252	7104	33478	-89252
Wind angle: 90°	150C1F3	7104	31199	84636	7104	31199	-84636
	380C2F1	14209	70565	185882	14209	70565	-185882
	380C2F2	14208	66956	178504	14208	66956	-178504
	380C2F3	14207	62398	169272	14207	62398	-169272
	RTG	0	0	0	3851	17307	-46852

NL4/1b	GW / opgw	1927	6082	19940	1927	6082	-19940
Wind, -20°C	150C1F1	7097	21713	73295	7097	21713	-73295
Permanent loads yg= 1.0	150C1F2	7097	21479	73031	7097	21479	-73031
Wind angle: 90°	150C1F3	7097	21190	72727	7097	21190	-72727
	380C2F1	14195	43426	146590	14195	43426	-146590
	380C2F2	14195	42959	146062	14195	42959	-146062
	380C2F3	14195	42379	145453	14195	42379	-145453
	RTG	0	0	0	3848	11262	-38485
NL4/3	GW / opgw	6604	17177	49924	6604	17177	-49924
Wind, -5°C	150C1F1	11211	32857	100993	11211	32857	-100993
Permanent loads yg= 1.0	150C1F2	11210	32117	99932	11210	32117	-99932
Wind angle: 90°	150C1F3	11210	31201	98686	11210	31201	-98686
	380C2F1	22421	65715	201986	22421	65715	-201986
	380C2F2	22421	64234	199863	22421	64234	-199863
	380C2F3	22420	62403	197371	22420	62403	-197371
	RTG	0	0	0	13223	30355	-95112
NL4/4	GW / opgw	2429	6407	21151	2429	6407	-21151
Construction/maintenance, +5°C	150C1F1	8103	21174	71279	8103	21174	-71279
Permanent loads yg= 1.0	150C1F2	8103	20955	71069	8103	20955	-71069
Wind angle: 90°	150C1F3	8103	20682	70830	8103	20682	-70830
	380C2F1	16207	42348	142557	16207	42348	-142557
	380C2F2	16207	41910	142139	16207	41910	-142139
	380C2F3	16207	41365	141660	16207	41365	-141660
	RTG	0	0	0	4852	12080	-41537
NL4/1a	GW / opgw	1928	9991	26190	1928	5835	-18079
Wind, 10°C	150C1F1	7104	30812	83859	7101	20026	-64364
Permanent loads yg= 1.0	150C1F2	7103	29403	81049	7101	19687	-63915
Wind angle: -45°	150C1F3	7103	27637	77583	7101	19269	-63394
	380C2F1	14207	61624	167718	14203	40052	-128727
	380C2F2	14206	58806	162097	14203	39375	-127830
	380C2F3	14206	55274	155165	14202	38537	-126788
	RTG	0	0	0	3850	10507	-34462
NL4/1b	GW / opgw	1927	5857	19641	1927	5336	-19175
Wind, -20°C	150C1F1	7097	21141	72678	7097	19784	-71762
Permanent loads yg= 1.0	150C1F2	7097	20965	72511	7097	19737	-71750
Wind angle: -45°	150C1F3	7097	20747	72319	7097	19678	-71738
	380C2F1	14195	42282	145357	14194	39569	-143525
	380C2F2	14195	41930	145022	14194	39475	-143501
	380C2F3	14194	41493	144639	14194	39357	-143476
	RTG	0	0	0	3848	10408	-37895
NL4/3	GW / opgw	6604	16051	48504	6603	13394	-46187
Wind, -5°C	150C1F1	11210	31048	98485	11209	26852	-94417
Permanent loads yg= 1.0	150C1F2	11210	30494	97782	11209	26712	-94351
Wind angle: -45°	150C1F3	11210	29807	96965	11209	26537	-94279
	380C2F1	22420	62096	196970	22419	53704	-188833
	380C2F2	22420	60987	195564	22419	53425	-188703
	380C2F3	22420	59614	193930	22419	53074	-188559
	RTG	0	0	0	13222	25996	-92151
NL4/4	GW / opgw	2429	6206	20942	2429	5727	-20634
Construction/maintenance, +5°C	150C1F1	8103	20637	70792	8103	19339	-70099
Permanent loads yg= 1.0	150C1F2	8103	20470	70662	8103	19293	-70091
Wind angle: -45°	150C1F3	8103	20263	70513	8103	19235	-70084
	380C2F1	16207	41273	141585	16206	38678	-140198
	380C2F2	16206	40941	141323	16206	38586	-140183
	380C2F3	16206	40527	141027	16206	38471	-140168
	RTG	0	0	0	4852	11284	-41161

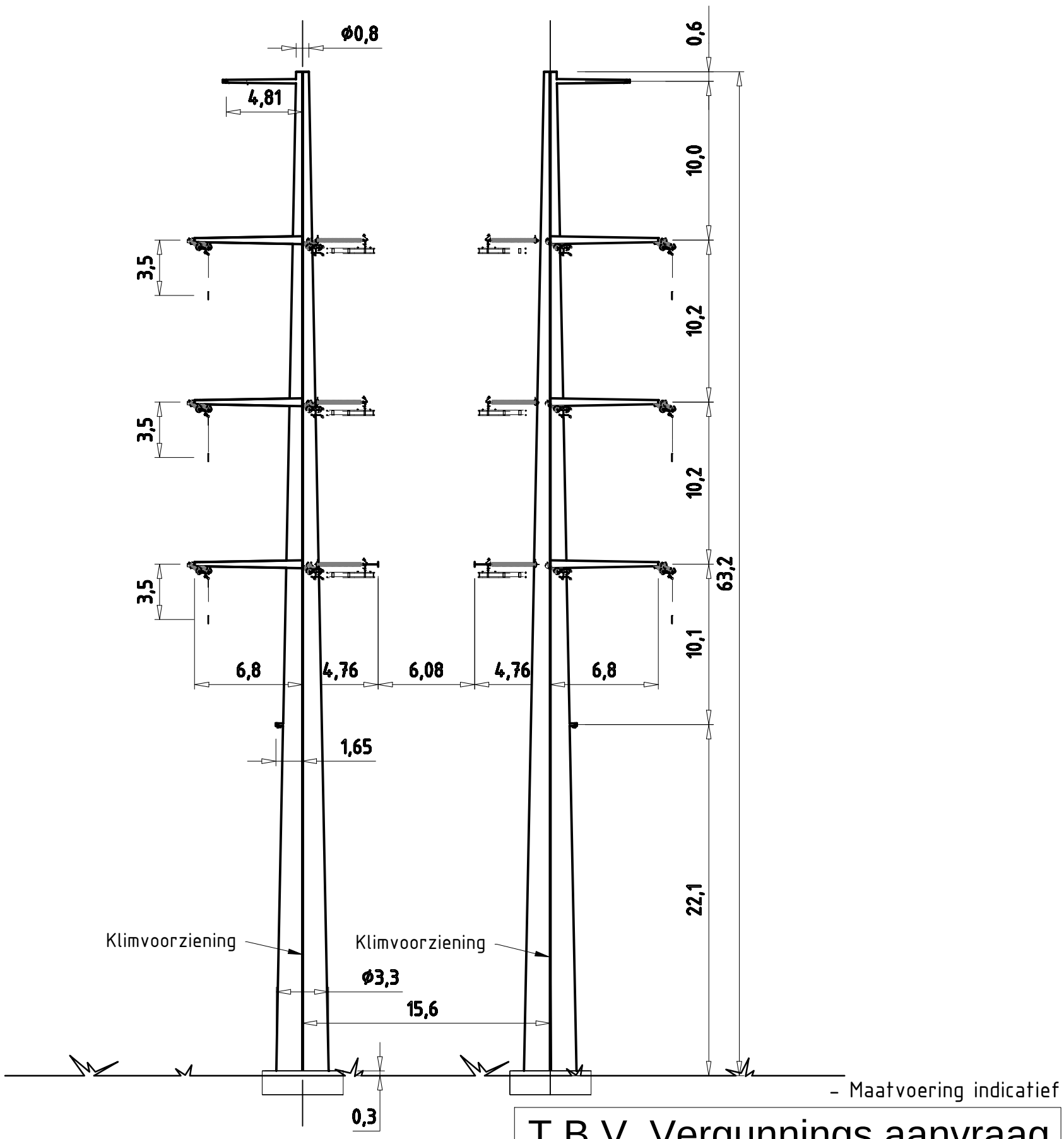

T.B.V. Vergunnings aanvraag

Wintrack
Masttype: ZWW4HK400

- Trekparameter 1800m
- 2x380 / 2x150 Hoekmast
- 400m Veldlengte
- 150°-180° Lijnhoek
- Uitvoering Staal of Beton
- Kleurstelling hoofdelement:
  Ral 9018 Papyrus white
- Kleurstelling Appendages:
  Ral 7021 Black grey

5.0	03-03-2014	Modified botom diameter and increased traverse length
4.0	03-02-2014	Modified top/botom diameter
3.0	11-03-2013	Small modification

KEMA DNV

Projectname: Engineering verbinding ZW380

Third angle projection:

Drawing no.: 74102194-035-091V

Design state: Definitief		Scale: 1:300	
Drawn by: BJT	03-03-2014	Units: m	
Checked by: AJP	03-03-2014	Project no: 000.145	
Approved by: AW	03-03-2014	Company: TenneT	

Description: Wintrack Masttype ZWW4HK400

Revision: 5.0

Format: A3

DNV KEMA Energy & Sustainability, Utrechtseweg 310, 6812 AR Arnhem, tel: +31 26 3 56 91 11, www.dnvkema.com

© 2013 - Filename: 74102194-035-091 - ZWW4HK400 Rev5.0.dwg

ZWW4HL400

Fundatie berekening

Bijlage CJ

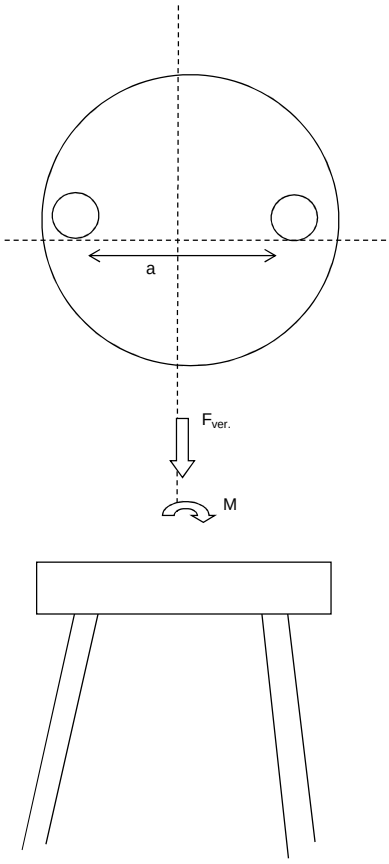

Fundatie ontwerp:
Heipaal

Afmetingen	b	400	mm	
	d	400	mm	
omtrek paal	$O_{p;gem}$	1,6	m	
schoorstand		8	:1	
α		7,125	graden	
Opstort	Diameter	5,3	m	
	Hoogte	1,8	m	
	Inhoud	39,7	m^3	
	e.g.	953	kN	
Onderplaat	Diameter	13,0	m	
	Hoogte	1,3	m	
	Inhoud	173	m^3	
	e.g.	4141	kN	
Hart paal tov rand fund.		0,6	m	
Optreden krachten				
e.g. mast		874	kN	
Fgeleiders		302	kN	
Maximale dwarskracht		1327	kN	
Fmax vert (druk)		1351	kN	
Fmin vert (trek)		1013	kN	
Maximale moment		59436	kNm	
Moment				
F_{diag}		5428	kN	
F_{hor}		1327	kN	
F_{ver}		5386	kN	
Mhor (tgv Fhor)		4114	kNm	
M_{tot}		63550	kNm	reductie door opwaarste kracht water
F=M/a		5386	kN	
Verticaal reactiekracht				
Fwater (trek)		2123	kN	
Fgrond (druk)		2988	kN	
Fgrond (trek)		2490	kN	
Fdmax (druk)		5525	kN	
Ftmax (trek)		2646	kN	
Fdtot (druk)		10910	kN	
Fttot (trek)		2740	kN	
Palen druk		10	(-)	
Palen trek		9	(-)	
Totaal palen		20	(-)	Per fundering

ZWW4HL400

TREKPALEN volgens CUR 2001-4 par. 8.

$$F_{r;trek;d} = \int_0^L O_{p;gem} \times p_{r;z;d} \times dz$$

Bijlage CJ

Bepaling opneembare paalbelasting op druk

heipaal

Afmeting paal	b	0,40	m
	b	0,40	m
omtrek paal	$O_{p;gem}$	1,60	m
paalfactor	α t	0,007	
aantal palen	M	1	
aantal sonderingen	N	1	
factor invloed aantal sonderingen	ξ	0,75	
conusweerstand over wrijvingstraject	$q_{c;z;max}$	15	MPa
	$q_{c;z;rep}$	11,25	MPa
materiaalfactor	$\gamma_{m;b4}$	1,4	
factor, wisselende belastingen	$\gamma_{m;var;qc}$	1,5	
	$q_{c;z;d}$	5,36	MPa
	$p_{r;z;d}$	37,5	kN/m²
	$F_{r;trek;d;i}$	60,0	kN/m¹
	$F_{trek,d}$	596	kN/m

Bepaling opneembare trekbelasting paal

sondering	diepte		$q_{c;z}$		$P_{r;max;schacht;i}$	$F_{r;trek;d;i}$	$F_{trek,d}$
	m	m	MPa	α t	kPa	kN	kN
	0	-1	0	0,007	0,00	0,00	0
	-1	-2	0	0,007	0,00	0,00	0
	-2	-3	0	0,007	0,00	0,00	0
	-3	-4	0	0,007	0,00	0,00	0
	-4	-5	0	0,007	0,00	0,00	0
	-5	-6	0	0,007	0,00	0,00	0
	-6	-7	0	0,007	0,00	0,00	0
	-7	-8	0	0,007	0,00	0,00	0
	-8	-9	1	0,007	2,50	4,00	4
	-9	-10	3	0,007	7,50	12,00	16
	-10	-11	2	0,007	5,00	8,00	24
	-11	-12	0	0,007	0,00	0,00	24
	-12	-13	3	0,007	7,50	12,00	36
	-13	-14	2	0,007	5,00	8,00	44
	-14	-15	4	0,007	10,00	16,00	60
	-15	-16	10	0,007	25,00	40,00	100
	-16	-17	9	0,007	22,50	36,00	136
	-17	-18	8	0,007	20,00	32,00	168
	-18	-19	12	0,007	30,00	48,00	216
	-19	-20	12	0,007	30,00	48,00	264
	-20	-21	10	0,007	25,00	40,00	304
	-21	-22	11	0,007	27,50	44,00	348
	-22	-23	11	0,007	27,50	44,00	392
	-23	-24	12	0,007	30,00	48,00	440
	-24	-25	12	0,007	30,00	48,00	488
	-25	-26	12	0,007	30,00	48,00	536
	-26	-27	15	0,007	37,50	60,00	596

$F_{trek,d}$	596	kN	paalafmeting	400	mm, paalpuntnivo	-27,00	m

Paalgroep factor	10%	
$F_{trek,d}$	**536,4**	kN

ZWW4HL400

DRUKPALEN

FUNDERINGSCONSTRUCTIE
Toelaatbare paalbelastingen

Bijlage CJ

Bepaling opneembare paalbelasting op druk

heipaal			v		
		diameter	a	2	mm
				2	mm
		Deq		0,001808	

maximale puntweerstand

$P_{r;max;punt;i}$		11,25	MN/m²
paalklasse factor	α_p	1,00	
factor paalvoet	β	1	
hoek van inwendige vrijwing van paalvoet	ϕ	40	
factor dwarsdoorsnede paalvoet	s	1,00	
minimale waarde neergaande deel	$q_{c;II;gem}$	9,00	MN/m²
gem. sondeerwaarde neergaande deel	$q_{c;I;gem}$	14,00	MN/m₂
gem. sondeerwaarde opgaande deel	$q_{c;III;gem}$	11,00	MN/m²

maximale paalschachtwrijving

$P_{r;max;schacht;i}$		0,05	MN/m²

waarin:

paalfactor	α_s	0,010	
conusweerstand over wrijvingstraject	$q_{c;z;a}$	5,00	MN/m²

maximale draagkracht alleenstaande paal

$\mathbf{F_{r;max;i}}$		0,00	MN

waarin:

$\mathbf{F_{r;max;punt;i}}$		0,00	MN
paalpunt oppervlak	A_{punt}	0,00	m^2
$\mathbf{F_{r;max;schacht;i}}$		0,00	MN
gemiddelde paalomtrek	$O_{p;gem}$	0,01	m
lengte schachtwrijving	Δl	15,00	m

Bepaling rekenwaarde van de maximale draagkracht

$F_{r;paal;max;d}$	MN	0,00	MN
materiaalfactor grond	$\gamma_{m;b}$	1,20	
waarde afhankelijk van aantal palen en aantal sonderingen	$\xi_{1;N}$	0,75	

$F_{r;paal;max;d}$	3	kN	mm, paalpuntnivo	-27,00 m

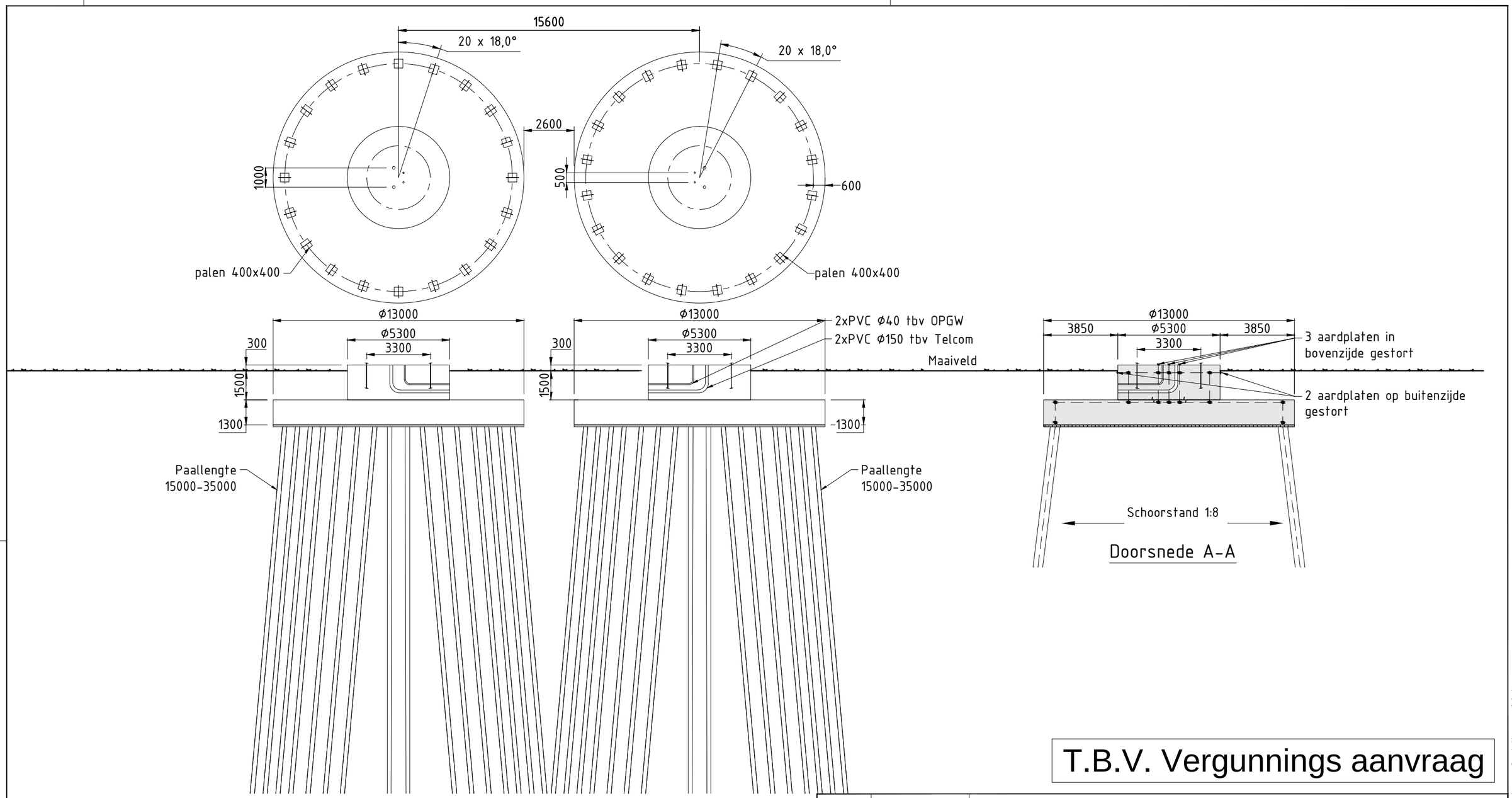

T.B.V. Vergunnings aanvraag

8.0	10-03-2014	Diverse modificaties
7.0	26-07-2013	Diverse modificaties
6.0	25-06-2013	Diverse modificaties

Verklaring

Gewapend beton

Werkvloer

Verklaring aarding

Ringleiding Ø16mm (FeB220) glad

Koppeling met aardstaaf in paal

Aardplaten

Opmerkingen

Maten in mm
Coordinaten in mm, in het stelsel van de rijksdriehoekmeting
Maatvoering in het 360 graden stelsel
Vellingkanten niet getekend
Ringleiding in bovenkant poer op het bovennet
plaatsen in de eerste laag
Mastvoetanker afmeting exclusief mastvoetflens breedte
Afmetingen indicatief

Projectname:
Engineering verbinding ZW380

Third angle projection:

Drawing no.:
74102194-032-094V

Design state: Definitief		Scale:	1:200
Drawn by:	RBE	10-03-2014	Units: mm
Checked by:	AJP	10-03-2014	Project no: 000.145
Approved by:	GJB	10-03-2014	Company: TenneT

Description:
Principe ontwerp fundatie hoekmast
ZWW4HL400 masten familie

Revision: 8.0

Format: A3

DNV KEMA Energy & Sustainability, Utrechtseweg 310, 6812 AR Arnhem, tel: +31 26 3 56 91 11, www.dnvkema.com

© 2013 - Filename: 74102194-032-094 - ZWW4HL400 Principe ontwerp fundaties_rev8.0.dwg

ZWW4HL400

Bijlage BJ

Location dependent data to obtain pressures

Wind area			2	
Terrain catagory	O=onbebouwd, B=bebouwd		O	
Hoogte		h	63.2	m
Diameter voet		d voet	3.3	m
top		d top	0.8	m
gem		d gem	2.1	m
wanddikte		t	28	mm
Oppervlakte aan voet		A	287820	mm^2
Traagheidsmoment aan voet		W_x	2.33E+08	mm^3
Weerstandsmoment aan voet		I_x	3.81E+11	mm^4
		2de orde	10.0	%
Mast: Gewicht		$F_{rep;ver}$	874	kN

Ultimate limit state	**hoogte**	**F_{ver}**	**$F_{loodrecht}$**	**$F_{//}$**	$F_{Samengesteld}$		
	m	kN	kN	kN	kN		
GW / opgw	62.6	18.7	65.4	0.0	65.4	2689	kNm
150C1F1	52.6	29.4	123.2	0.0	123.2	5331	kNm
150C1F2	42.4	29.4	120.9	0.0	120.9	4223	kNm
150C1F3	32.2	29.4	118.1	0.0	118.1	3140	kNm
380C2F1	52.6	58.8	246.4	0.0	246.4	10662	kNm
380C2F2	42.4	58.8	241.8	0.0	241.8	8447	kNm
380C2F3	32.2	58.8	236.2	0.0	236.2	6281	kNm
RTG	22.1	18.7	59.6	-113.2	128.0	1641	kNm

Stuwdruk	$F_{hor.}$	37.6	kN
	$M_{d;wind}$	1063	kNm
Totaal	$M_{d;tot}$	54033	kNm
Totaal moment incl. 2de orde effect	$M_{d;tot}$	59436	kNm

Normaalkracht;

Optredende normaalkracht

$N_{d;geleiders}$		302	kN
$N_{d;\ e.g.\ mast}$		1049	kN
$N_{s;d;totaal}$		1351	kN

Is buis plooigevoelig tgv normaalkracht: conform NEN-EN 50341 par. 7.4.5.4 — JA

	ρ_a	0.65	
	A_{eff}	188192	mm^2

Optredende spanning tgv normaalkracht

$N_{sd}/A_{eff} = f_{yd}/y_{m1}$ — 7 N/mm^2

Moment;

Optredende moment in de voet:

$M_{d;tot}$ — 59436 kNm

Is buis plooigevoelig tgv momentkracht: conform NEN-EN 50341 par. 7.4.5.4 — JA

	ρ_a	0.95	
	W_{eff}	2.23E+08	mm^3

Optredende spaning tgv moment:

$M_d/W_{eff} = f_{yd}/y_{m1}$ — 267 N/mm^2

Totale spanning:	σ_d	274	N/mm^2	< 284 N/mm^2 = ACCOORD
	$\sigma_{d;toegestaan}$	284	N/mm^2	==> 80% van 355 N/mm^2

Special limit state	**hoogte**	**F_{ver}**	**$F_{loodrecht}$**	**$F_{//}$**	$F_{Samengesteld}$		
	m	kN	kN	kN	kN		
GW / opgw	62.6	13.2	49.5	0.0	49.5	3098	kNm
150C1F1	52.6	22.4	97.0	0.0	97.0	5104	kNm
150C1F2	42.4	22.4	95.5	0.0	95.5	4050	kNm
150C1F3	32.2	22.4	93.7	0.0	93.7	3016	kNm
380C2F1	52.6	44.8	194.1	0.0	194.1	10208	kNm
380C2F2	42.4	44.8	191.0	0.0	191.0	8100	kNm
380C2F3	32.2	44.8	187.3	0.0	187.3	6031	kNm
RTG	22.1	13.2	45.5	-87.8	98.9	2185	kNm

Stuwdruk	$F_{hor.}$	303	kN		
Verplaating		1.20	m	3.44	EIS TENNET VISUEEL
Percentage van de verplaatsing		1.90%		5.5%	NEN-EN-50341
Hoek		2.01	graden		
Kromming		0.42%		1%	NEN-EN-50341
Fundatie rotatiestijfheid		0.005	rad		

ZWW4HL400

Loadcases for tower strength (ultimate limit state)

		Ahead			Back		
Loadcase according to 50341-3-15	Att. Point	Vertical [N]	Transversal [N]	Longitudinal [N]	Vertical [N]	Transversal [N]	Longitudinal [N]
NL1/1a	GW / opgw	2314	10090	19211	2314	10090	-19211
Wind, 10°C	150C1F1	8523	35255	68794	8523	35255	-68794
Permanent loads yg= 1.2	150C1F2	8523	34846	68453	8523	34846	-68453
Wind angle: 0°	150C1F3	8523	34346	68064	8523	34346	-68064
	380C2F1	17046	70509	137588	17046	70509	-137588
	380C2F2	17046	69692	136906	17046	69692	-136906
	380C2F3	17045	68692	136128	17045	68692	-136128
	RTG	0	0	0	4620	18754	-37098
NL1/1b	GW / opgw	2312	9852	20642	2312	9852	-20642
Wind, -20°C	150C1F1	8518	36490	76891	8518	36490	-76891
Permanent loads yg= 1.2	150C1F2	8518	36440	76891	8518	36440	-76891
Wind angle: 0°	150C1F3	8518	36377	76893	8518	36377	-76893
	380C2F1	17036	72979	153782	17036	72979	-153782
	380C2F2	17036	72879	153781	17036	72879	-153781
	380C2F3	17036	72754	153785	17036	72754	-153785
	RTG	0	0	0	4618	19357	-40887
NL1/3	GW / opgw	9331	27037	55487	9331	27037	-55487
Wind, -5°C	150C1F1	14688	52165	108064	14688	52165	-108064
Permanent loads yg= 1.2	150C1F2	14688	52017	108045	14688	52017	-108045
Wind angle: 0°	150C1F3	14688	51831	108029	14688	51831	-108029
	380C2F1	29376	104331	216128	29376	104331	-216128
	380C2F2	29376	104034	216090	29376	104034	-216090
	380C2F3	29376	103663	216058	29376	103663	-216058
	RTG	0	0	0	18688	53313	-111133
NL1/4	GW / opgw	3065	11087	23292	3065	11087	-23292
Construction/maintenance, +5°C	150C1F1	10026	36884	77736	10026	36884	-77736
Permanent loads yg= 1.2	150C1F2	10026	36836	77739	10026	36836	-77739
Wind angle: 0°	150C1F3	10026	36775	77746	10026	36775	-77746
	380C2F1	20053	73768	155471	20053	73768	-155471
	380C2F2	20053	73671	155479	20053	73671	-155479
	380C2F3	20053	73550	155492	20053	73550	-155492
	RTG	0	0	0	6124	21989	-46531
NL1/6	GW / opgw	2603	9373	20100	2603	9373	-20100
Permanent, +10°C	150C1F1	9589	34358	73681	9589	34358	-73681
Permanent loads yg= 1.35	150C1F2	9589	34358	73681	9589	34358	-73681
	150C1F3	9589	34358	73681	9589	34358	-73681
	380C2F1	19177	68716	147362	19177	68716	-147362
	380C2F2	19177	68716	147362	19177	68716	-147362
	380C2F3	19177	68716	147362	19177	68716	-147362
	RTG	0	0	0	5198	18728	-40162
NL1/1a	GW / opgw	2313	9407	18584	2316	21715	-34560
Wind, 10°C	150C1F1	8523	33574	67539	8529	65656	-107111
Permanent loads yg= 1.2	150C1F2	8523	33349	67407	8528	62307	-102578
Wind angle: 45°	150C1F3	8523	33072	67261	8527	58056	-96847
	380C2F1	17045	67147	135078	17057	131313	-214221
	380C2F2	17045	66698	134815	17056	124613	-205156
	380C2F3	17045	66144	134523	17054	116113	-193693
	RTG	0	0	0	4622	32353	-53953
NL1/1b	GW / opgw	2312	9771	20637	2312	11221	-21666
Wind, -20°C	150C1F1	8518	36275	76901	8518	39903	-78843
Permanent loads yg= 1.2	150C1F2	8518	36245	76906	8518	39493	-78492
Wind angle: 45°	150C1F3	8518	36206	76912	8518	38991	-78090
	380C2F1	17036	72551	153803	17037	79806	-157686
	380C2F2	17036	72489	153811	17036	78985	-156983
	380C2F3	17036	72412	153824	17036	77981	-156181
	RTG	0	0	0	4618	20844	-41618
NL1/3	GW / opgw	9331	26639	55494	9334	33373	-59228
Wind, -5°C	150C1F1	14688	51534	108024	14690	62748	-115750
Permanent loads yg= 1.2	150C1F2	14688	51445	108027	14690	61470	-114487
Wind angle: 45°	150C1F3	14688	51332	108036	14690	59901	-113012
	380C2F1	29376	103069	216048	29381	125496	-231499
	380C2F2	29376	102889	216055	29380	122939	-228975
	380C2F3	29376	102664	216072	29379	119802	-226024
	RTG	0	0	0	18691	60372	-113656
NL1/4	GW / opgw	3065	11012	23298	3066	12260	-23891
Construction/maintenance, +5°C	150C1F1	10026	36677	77762	10027	40016	-79081
Permanent loads yg= 1.2	150C1F2	10026	36647	77768	10027	39647	-78819
Wind angle: 45°	150C1F3	10026	36609	77776	10027	39195	-78525
	380C2F1	20053	73354	155524	20053	80032	-158161
	380C2F2	20053	73294	155536	20053	79295	-157639
	380C2F3	20053	73218	155553	20053	78390	-157050
	RTG	0	0	0	6124	23303	-46888

NL1/1a	GW / opgw	2315	20632	33076	2315	20632	-33076
Wind, 10°C	150C1F1	8528	62681	103084	8528	62681	-103084
Permanent loads yg= 1.2	150C1F2	8527	59578	98895	8527	59578	-98895
Wind angle: 90°	150C1F3	8527	55652	93623	8527	55652	-93623
	380C2F1	17056	125363	206168	17056	125363	-206168
	380C2F2	17055	119157	197791	17055	119157	-197791
	380C2F3	17053	111305	187246	17053	111305	-187246
	RTG	0	0	0	4622	30976	-52078
NL1/1b	GW / opgw	2312	11072	21512	2312	11072	-21512
Wind, -20°C	150C1F1	8518	39538	78529	8518	39538	-78529
Permanent loads yg= 1.2	150C1F2	8518	39168	78228	8518	39168	-78228
Wind angle: 90°	150C1F3	8518	38715	77886	8518	38715	-77886
	380C2F1	17036	79076	157059	17036	79076	-157059
	380C2F2	17036	78336	156457	17036	78336	-156457
	380C2F3	17036	77431	155772	17036	77431	-155772
	RTG	0	0	0	4618	20687	-41495
NL1/3	GW / opgw	9334	32708	58664	9334	32708	-58664
Wind, -5°C	150C1F1	14690	61611	114624	14690	61611	-114624
Permanent loads yg= 1.2	150C1F2	14690	60456	113524	14690	60456	-113524
Wind angle: 90°	150C1F3	14689	59040	112243	14689	59040	-112243
	380C2F1	29380	123221	229249	29380	123221	-229249
	380C2F2	29380	120912	227047	29380	120912	-227047
	380C2F3	29379	118079	224486	29379	118079	-224486
	RTG	0	0	0	18690	59646	-113204
NL1/4	GW / opgw	3066	12136	23793	3066	12136	-23793
Construction/maintenance, +5°C	150C1F1	10027	39688	78847	10027	39688	-78847
Permanent loads yg= 1.2	150C1F2	10027	39355	78626	10027	39355	-78626
Wind angle: 90°	150C1F3	10027	38946	78377	10027	38946	-78377
	380C2F1	20053	79376	157695	20053	79376	-157695
	380C2F2	20053	78710	157251	20053	78710	-157251
	380C2F3	20053	77892	156754	20053	77892	-156754
	RTG	0	0	0	6124	23169	-46816
NL1/1a	GW / opgw	2316	21715	34560	2313	9407	-18584
Wind, 10°C	150C1F1	8529	65656	107111	8523	33574	-67539
Permanent loads yg= 1.2	150C1F2	8528	62307	102578	8523	33349	-67407
Wind angle: -45°	150C1F3	8527	58056	96847	8523	33072	-67261
	380C2F1	17057	131313	214221	17045	67147	-135078
	380C2F2	17056	124613	205156	17045	66698	-134815
	380C2F3	17054	116113	193693	17045	66144	-134523
	RTG	0	0	0	4620	18027	-36616
NL1/1b	GW / opgw	2312	11221	21666	2312	9771	-20637
Wind, -20°C	150C1F1	8518	39903	78843	8518	36275	-76901
Permanent loads yg= 1.2	150C1F2	8518	39493	78492	8518	36245	-76906
Wind angle: -45°	150C1F3	8518	38991	78090	8518	36206	-76912
	380C2F1	17037	79806	157686	17036	72551	-153803
	380C2F2	17036	78985	156983	17036	72489	-153811
	380C2F3	17036	77981	156181	17036	72412	-153824
	RTG	0	0	0	4618	19261	-40896
NL1/3	GW / opgw	9334	33373	59228	9331	26639	-55494
Wind, -5°C	150C1F1	14690	62748	115750	14688	51534	-108024
Permanent loads yg= 1.2	150C1F2	14690	61470	114487	14688	51445	-108027
Wind angle: -45°	150C1F3	14690	59901	113012	14688	51332	-108036
	380C2F1	29381	125496	231499	29376	103069	-216048
	380C2F2	29380	122939	228975	29376	102889	-216055
	380C2F3	29379	119802	226024	29376	102664	-216072
	RTG	0	0	0	18688	52834	-111209
NL1/4	GW / opgw	3066	12260	23891	3065	11012	-23298
Construction/maintenance, +5°C	150C1F1	10027	40016	79081	10026	36677	-77762
Permanent loads yg= 1.2	150C1F2	10027	39647	78819	10026	36647	-77768
Wind angle: -45°	150C1F3	10027	39195	78525	10026	36609	-77776
	380C2F1	20053	80032	158161	20053	73354	-155524
	380C2F2	20053	79295	157639	20053	73294	-155536
	380C2F3	20053	78390	157050	20053	73218	-155553
	RTG	0	0	0	6124	21897	-46550
NL1//1a	GW / opgw	1735	8522	15849	1735	8522	-15849
Wind, 10°C	150C1F1	6391	29274	55970	6391	29274	-55970
Permanent loads yg= 0.9	150C1F2	6391	28789	55465	6391	28789	-55465
Wind angle: 0°	150C1F3	6391	28196	54878	6391	28196	-54878
	380C2F1	12782	58548	111941	12782	58548	-111941
	380C2F2	12782	57577	110929	12782	57577	-110929
	380C2F3	12781	56393	109755	12781	56393	-109755
	RTG	0	0	0	3464	15350	-29801

NL1/1b	GW / opgw	1734	7950	16564	1734	7950	-16564
Wind, -20°C	150C1F1	6387	29637	62195	6387	29637	-62195
Permanent loads yg= 0.9	150C1F2	6387	29582	62186	6387	29582	-62186
Wind angle: 0°	150C1F3	6387	29515	62177	6387	29515	-62177
	380C2F1	12774	59273	124390	12774	59273	-124390
	380C2F2	12774	59165	124372	12774	59165	-124372
	380C2F3	12774	59030	124355	12774	59030	-124355
	RTG	0	0	0	3463	15543	-32710
NL1/3	GW / opgw	8751	25865	52972	8751	25865	-52972
Wind, -5°C	150C1F1	12554	46617	96166	12554	46617	-96166
Permanent loads yg= 0.9	150C1F2	12554	46461	96131	12554	46461	-96131
Wind angle: 0°	150C1F3	12554	46267	96096	12554	46267	-96096
	380C2F1	25109	93234	192332	25109	93234	-192332
	380C2F2	25109	92922	192261	25109	92922	-192261
	380C2F3	25109	92533	192191	25109	92533	-192191
	RTG	0	0	0	17529	50952	-106070
NL1/4	GW / opgw	2487	9412	19698	2487	9412	-19698
Construction/maintenance, +5°C	150C1F1	7894	30627	64319	7894	30627	-64319
Permanent loads yg= 0.9	150C1F2	7894	30577	64317	7894	30577	-64317
Wind angle: 0°	150C1F3	7894	30513	64318	7894	30513	-64318
	380C2F1	15788	61255	128638	15788	61255	-128638
	380C2F2	15788	61153	128635	15788	61153	-128635
	380C2F3	15788	61026	128636	15788	61026	-128636
	RTG	0	0	0	4968	18628	-39323
NL1/6	GW / opgw	1735	6697	14362	1735	6697	-14362
Permanent, +10°C	150C1F1	6390	24717	53005	6390	24717	-53005
Permanent loads yg= 0.9	150C1F2	6390	24717	53005	6390	24717	-53005
	150C1F3	6390	24717	53005	6390	24717	-53005
	380C2F1	12781	49433	106010	12781	49433	-106010
	380C2F2	12781	49433	106010	12781	49433	-106010
	380C2F3	12781	49433	106010	12781	49433	-106010
	RTG	0	0	0	3464	13373	-28678
NL1/1a	GW / opgw	1735	7711	14947	1737	21206	-33470
Wind, 10°C	150C1F1	6391	27289	54062	6396	63225	-101899
Permanent loads yg= 0.9	150C1F2	6391	27027	53851	6395	59668	-96922
Wind angle: 45°	150C1F3	6391	26706	53611	6395	55112	-90535
	380C2F1	12781	54578	108124	12792	126450	-203798
	380C2F2	12781	54054	107702	12791	119336	-193843
	380C2F3	12781	53413	107222	12789	110224	-181071
	RTG	0	0	0	3466	30747	-50511
NL1/1b	GW / opgw	1734	7862	16543	1734	9571	-18127
Wind, -20°C	150C1F1	6387	29407	62172	6387	33623	-65377
Permanent loads yg= 0.9	150C1F2	6387	29374	62172	6387	33131	-64850
Wind angle: 45°	150C1F3	6387	29333	62174	6387	32530	-64237
	380C2F1	12774	58814	124344	12775	67247	-130754
	380C2F2	12774	58749	124344	12775	66262	-129699
	380C2F3	12774	58667	124348	12774	65060	-128474
	RTG	0	0	0	3463	17263	-33938
NL1/3	GW / opgw	8751	25460	52966	8754	32394	-57130
Wind, -5°C	150C1F1	12554	45957	96064	12557	58133	-105855
Permanent loads yg= 0.9	150C1F2	12554	45864	96060	12556	56734	-104334
Wind angle: 45°	150C1F3	12554	45748	96060	12556	55015	-102537
	380C2F1	25109	91914	192127	25114	116266	-211711
	380C2F2	25109	91728	192121	25113	113468	-208669
	380C2F3	25109	91495	192121	25112	110030	-205074
	RTG	0	0	0	17531	58193	-108986
NL1/4	GW / opgw	2487	9333	19697	2487	10709	-20565
Construction/maintenance, +5°C	150C1F1	7894	30411	64325	7894	34123	-66445
Permanent loads yg= 0.9	150C1F2	7894	30380	64328	7894	33701	-66069
Wind angle: 45°	150C1F3	7894	30341	64334	7894	33185	-65638
	380C2F1	15788	60822	128649	15789	68247	-132891
	380C2F2	15788	60760	128657	15788	67402	-132138
	380C2F3	15788	60682	128668	15788	66370	-131275
	RTG	0	0	0	4968	20051	-39916
NL1/1a	GW / opgw	1736	20081	31895	1736	20081	-31895
Wind, 10°C	150C1F1	6395	60067	97481	6395	60067	-97481
Permanent loads yg= 0.9	150C1F2	6395	56750	92832	6395	56750	-92832
Wind angle: 90°	150C1F3	6394	52510	86888	6394	52510	-86888
	380C2F1	12791	120134	194961	12791	120134	-194961
	380C2F2	12790	113499	185664	12790	113499	-185664
	380C2F3	12789	105021	173776	12789	105021	-173776
	RTG	0	0	0	3466	29262	-48403

NL1/1b	GW / opgw	1734	9391	17909	1734	9391	-17909
Wind, -20°C	150C1F1	6387	33185	64907	6387	33185	-64907
Permanent loads yg= 0.9	150C1F2	6387	32742	64449	6387	32742	-64449
Wind angle: 90°	150C1F3	6387	32202	63919	6387	32202	-63919
	380C2F1	12775	66370	129814	12775	66370	-129814
	380C2F2	12774	65484	128898	12774	65484	-128898
	380C2F3	12774	64404	127839	12774	64404	-127839
	RTG	0	0	0	3463	17075	-33750
NL1/3	GW / opgw	8753	31706	56517	8753	31706	-56517
Wind, -5°C	150C1F1	12557	56888	104500	12557	56888	-104500
Permanent loads yg= 0.9	150C1F2	12556	55623	103163	12556	55623	-103163
Wind angle: 90°	150C1F3	12556	54071	101590	12556	54071	-101590
	380C2F1	25113	113777	209000	25113	113777	-209000
	380C2F2	25112	111247	206326	25112	111247	-206326
	380C2F3	25112	108142	203180	25112	108142	-203180
	RTG	0	0	0	17531	57444	-108483
NL1/4	GW / opgw	2487	10568	20432	2487	10568	-20432
Construction/maintenance, +5°C	150C1F1	7894	33748	66110	7894	33748	-66110
Permanent loads yg= 0.9	150C1F2	7894	33367	65786	7894	33367	-65786
Wind angle: 90°	150C1F3	7894	32902	65417	7894	32902	-65417
	380C2F1	15788	67495	132219	15788	67495	-132219
	380C2F2	15788	66735	131572	15788	66735	-131572
	380C2F3	15788	65804	130834	15788	65804	-130834
	RTG	0	0	0	4968	19902	-39812
NL1/1a	GW / opgw	1737	21206	33470	1735	7711	-14947
Wind, 10°C	150C1F1	6396	63225	101899	6391	27289	-54062
Permanent loads yg= 0.9	150C1F2	6395	59668	96922	6391	27027	-53851
Wind angle: -45°	150C1F3	6395	55112	90535	6391	26706	-53611
	380C2F1	12792	126450	203798	12781	54578	-108124
	380C2F2	12791	119336	193843	12781	54054	-107702
	380C2F3	12789	110224	181071	12781	53413	-107222
	RTG	0	0	0	3464	14499	-29051
NL1/1b	GW / opgw	1734	9571	18127	1734	7862	-16543
Wind, -20°C	150C1F1	6387	33623	65377	6387	29407	-62172
Permanent loads yg= 0.9	150C1F2	6387	33131	64850	6387	29374	-62172
Wind angle: -45°	150C1F3	6387	32530	64237	6387	29333	-62174
	380C2F1	12775	67247	130754	12774	58814	-124344
	380C2F2	12775	66262	129699	12774	58749	-124344
	380C2F3	12774	65060	128474	12774	58667	-124348
	RTG	0	0	0	3463	15441	-32706
NL1/3	GW / opgw	8754	32394	57130	8751	25460	-52966
Wind, -5°C	150C1F1	12557	58133	105855	12554	45957	-96064
Permanent loads yg= 0.9	150C1F2	12556	56734	104334	12554	45864	-96060
Wind angle: -45°	150C1F3	12556	55015	102537	12554	45748	-96060
	380C2F1	25114	116266	211711	25109	91914	-192127
	380C2F2	25113	113468	208669	25109	91728	-192121
	380C2F3	25112	110030	205074	25109	91495	-192121
	RTG	0	0	0	17529	50468	-106135
NL1/4	GW / opgw	2487	10709	20565	2487	9333	-19697
Construction/maintenance, +5°C	150C1F1	7894	34123	66445	7894	30411	-64325
Permanent loads yg= 0.9	150C1F2	7894	33701	66069	7894	30380	-64328
Wind angle: -45°	150C1F3	7894	33185	65638	7894	30341	-64334
	380C2F1	15789	68247	132891	15788	60822	-128649
	380C2F2	15788	67402	132138	15788	60760	-128657
	380C2F3	15788	66370	131275	15788	60682	-128668
	RTG	0	0	0	4968	18533	-39336

ZWW4HL400

Loadcases for tower strength (Special limit state)

		Ahead			Back		
Loadcase according to 50341-3-15	Att. Point	Vertical [N]	Transversal [N]	Longitudinal [N]	Vertical [N]	Transversal [N]	Longitudinal [N]
NL3/1a	GW / opgw	0	0	0	2313	9177	-18418
Wind, 10°C	150C1F1	0	0	0	8523	32999	-67226
Permanent loads yg= 1.2	150C1F2	0	0	0	8523	32835	-67152
Wind angle: 0°	150C1F3	0	0	0	8522	32632	-67072
	380C2F1	0	0	0	17045	65999	-134453
	380C2F2	0	0	0	17045	65670	-134305
	380C2F3	0	0	0	17045	65264	-134145
	RTG	0	0	0	4620	17777	-36500
NL3/1b	GW / opgw	0	0	0	2312	9804	-20637
Wind, -20°C	150C1F1	0	0	0	8518	36364	-76893
Permanent loads yg= 1.2	150C1F2	0	0	0	8518	36325	-76896
Wind angle: 0°	150C1F3	0	0	0	8518	36277	-76901
	380C2F1	0	0	0	17036	72727	-153787
	380C2F2	0	0	0	17036	72650	-153792
	380C2F3	0	0	0	17036	72553	-153803
	RTG	0	0	0	4618	19300	-40891
NL3/3	GW / opgw	0	0	0	3883	14529	-29165
Wind, -5°C	150C1F1	0	0	0	9901	38892	-80361
Permanent loads yg= 1.2	150C1F2	0	0	0	9901	38764	-80327
Wind angle: 0°	150C1F3	0	0	0	9901	38605	-80291
	380C2F1	0	0	0	19802	77784	-160723
	380C2F2	0	0	0	19802	77528	-160653
	380C2F3	0	0	0	19802	77210	-160582
	RTG	0	0	0	7767	28176	-57870
NL3/4	GW / opgw	0	0	0	2915	10616	-22378
Construction/maintenance, +5°C	150C1F1	0	0	0	9725	35903	-75906
Permanent loads yg= 1.2	150C1F2	0	0	0	9725	35866	-75911
Wind angle: 0°	150C1F3	0	0	0	9725	35819	-75919
	380C2F1	0	0	0	19451	71807	-151812
	380C2F2	0	0	0	19451	71732	-151822
	380C2F3	0	0	0	19451	71637	-151837
	RTG	0	0	0	5823	21078	-44703
NL3/1a	GW / opgw	0	0	0	2314	14308	-24444
Wind, 10°C	150C1F1	0	0	0	8525	45813	-80736
Permanent loads yg= 1.2	150C1F2	0	0	0	8524	44263	-78789
Wind angle: 45°	150C1F3	0	0	0	8524	42347	-76437
	380C2F1	0	0	0	17049	91626	-161472
	380C2F2	0	0	0	17049	88526	-157578
	380C2F3	0	0	0	17048	84693	-152874
	RTG	0	0	0	4621	23345	-42043
NL3/1b	GW / opgw	0	0	0	2312	10807	-21256
Wind, -20°C	150C1F1	0	0	0	8518	38889	-78013
Permanent loads yg= 1.2	150C1F2	0	0	0	8518	38591	-77797
Wind angle: 45°	150C1F3	0	0	0	8518	38225	-77553
	380C2F1	0	0	0	17036	77777	-156027
	380C2F2	0	0	0	17036	77181	-155594
	380C2F3	0	0	0	17036	76450	-155107
	RTG	0	0	0	4618	20406	-41295
NL3/3	GW / opgw	0	0	0	3885	21841	-36979
Wind, -5°C	150C1F1	0	0	0	9903	48510	-88986
Permanent loads yg= 1.2	150C1F2	0	0	0	9903	47334	-87645
Wind angle: 45°	150C1F3	0	0	0	9902	45889	-86059
	380C2F1	0	0	0	19806	97020	-177971
	380C2F2	0	0	0	19805	94667	-175291
	380C2F3	0	0	0	19805	91779	-172118
	RTG	0	0	0	7768	36134	-64856
NL3/4	GW / opgw	0	0	0	2915	11505	-22754
Construction/maintenance, +5°C	150C1F1	0	0	0	9726	38271	-76685
Permanent loads yg= 1.2	150C1F2	0	0	0	9726	37996	-76520
Wind angle: 45°	150C1F3	0	0	0	9725	37659	-76337
	380C2F1	0	0	0	19451	76541	-153370
	380C2F2	0	0	0	19451	75993	-153041
	380C2F3	0	0	0	19451	75318	-152674
	RTG	0	0	0	5823	22087	-44897
NL3/1a	GW / opgw	0	0	0	2314	13771	-23728
Wind, 10°C	150C1F1	0	0	0	8524	44435	-79003
Permanent loads yg= 1.2	150C1F2	0	0	0	8524	43026	-77263
Wind angle: 90°	150C1F3	0	0	0	8524	41289	-75172
	380C2F1	0	0	0	17049	88869	-158005
	380C2F2	0	0	0	17048	86053	-154526
	380C2F3	0	0	0	17048	82578	-150345
	RTG	0	0	0	4621	22737	-41301

NL3/1b	GW / opgw	0	0	0	2312	10699	-21159
Wind, -20°C	150C1F1	0	0	0	8518	38623	-77820
Permanent loads yg= 1.2	150C1F2	0	0	0	8518	38354	-77637
Wind angle: 90°	150C1F3	0	0	0	8518	38024	-77431
	380C2F1	0	0	0	17036	77247	-155640
	380C2F2	0	0	0	17036	76709	-155273
	380C2F3	0	0	0	17036	76048	-154861
	RTG	0	0	0	4618	20291	-41221
NL3/3	GW / opgw	0	0	0	3885	21080	-36034
Wind, -5°C	150C1F1	0	0	0	9903	47463	-87791
Permanent loads yg= 1.2	150C1F2	0	0	0	9902	46400	-86612
Wind angle: 90°	150C1F3	0	0	0	9902	45097	-85222
	380C2F1	0	0	0	19805	94927	-175583
	380C2F2	0	0	0	19805	92801	-173223
	380C2F3	0	0	0	19804	90194	-170443
	RTG	0	0	0	7768	35276	-63898
NL3/4	GW / opgw	0	0	0	2915	11412	-22688
Construction/maintenance, +5°C	150C1F1	0	0	0	9726	38027	-76538
Permanent loads yg= 1.2	150C1F2	0	0	0	9726	37779	-76399
Wind angle: 90°	150C1F3	0	0	0	9725	37473	-76246
	380C2F1	0	0	0	19451	76053	-153076
	380C2F2	0	0	0	19451	75557	-152799
	380C2F3	0	0	0	19451	74945	-152493
	RTG	0	0	0	5823	21985	-44852
NL3/1a	GW / opgw	0	0	0	2313	8906	-18274
Wind, 10°C	150C1F1	0	0	0	8522	32312	-66975
Permanent loads yg= 1.2	150C1F2	0	0	0	8522	32218	-66954
Wind angle: -45°	150C1F3	0	0	0	8522	32100	-66934
	380C2F1	0	0	0	17045	64625	-133950
	380C2F2	0	0	0	17045	64435	-133908
	380C2F3	0	0	0	17045	64199	-133867
	RTG	0	0	0	4620	17475	-36413
NL3/1b	GW / opgw	0	0	0	2312	9742	-20639
Wind, -20°C	150C1F1	0	0	0	8518	36198	-76913
Permanent loads yg= 1.2	150C1F2	0	0	0	8518	36174	-76918
Wind angle: -45°	150C1F3	0	0	0	8518	36144	-76925
	380C2F1	0	0	0	17036	72396	-153827
	380C2F2	0	0	0	17036	72348	-153836
	380C2F3	0	0	0	17036	72287	-153850
	RTG	0	0	0	4618	19226	-40903
NL3/3	GW / opgw	0	0	0	3883	14130	-28996
Wind, -5°C	150C1F1	0	0	0	9901	38353	-80255
Permanent loads yg= 1.2	150C1F2	0	0	0	9901	38277	-80249
Wind angle: -45°	150C1F3	0	0	0	9901	38182	-80246
	380C2F1	0	0	0	19802	76705	-160510
	380C2F2	0	0	0	19802	76554	-160499
	380C2F3	0	0	0	19802	76365	-160493
	RTG	0	0	0	7767	27725	-57784
NL3/4	GW / opgw	0	0	0	2915	10557	-22386
Construction/maintenance, +5°C	150C1F1	0	0	0	9725	35742	-75935
Permanent loads yg= 1.2	150C1F2	0	0	0	9725	35718	-75940
Wind angle: -45°	150C1F3	0	0	0	9725	35688	-75948
	380C2F1	0	0	0	19451	71483	-151869
	380C2F2	0	0	0	19451	71436	-151881
	380C2F3	0	0	0	19451	71377	-151896
	RTG	0	0	0	5823	21006	-44720
NL3/1a	GW / opgw	0	0	0	1735	7440	-14693
Wind, 10°C	150C1F1	0	0	0	6391	26623	-53552
Permanent loads yg= 0.9	150C1F2	0	0	0	6391	26434	-53426
Wind angle: 0°	150C1F3	0	0	0	6390	26203	-53285
	380C2F1	0	0	0	12781	53245	-107104
	380C2F2	0	0	0	12781	52868	-106853
	380C2F3	0	0	0	12781	52405	-106571
	RTG	0	0	0	3464	14212	-28857
NL3/1b	GW / opgw	0	0	0	1734	7898	-16549
Wind, -20°C	150C1F1	0	0	0	6387	29501	-62176
Permanent loads yg= 0.9	150C1F2	0	0	0	6387	29460	-62173
Wind angle: 0°	150C1F3	0	0	0	6387	29408	-62172
	380C2F1	0	0	0	12774	59002	-124352
	380C2F2	0	0	0	12774	58919	-124347
	380C2F3	0	0	0	12774	58816	-124344
	RTG	0	0	0	3463	15483	-32705

NL3/3	GW / opgw	0	0	0	3304	13004	-25894
Wind, -5°C	150C1F1	0	0	0	7769	32583	-66833
Permanent loads yg= 0.9	150C1F2	0	0	0	7769	32443	-66770
Wind angle: 0°	150C1F3	0	0	0	7769	32268	-66702
	380C2F1	0	0	0	15538	65167	-133667
	380C2F2	0	0	0	15538	64885	-133541
	380C2F3	0	0	0	15538	64537	-133405
	RTG	0	0	0	6610	25061	-51190
NL3/4	GW / opgw	0	0	0	2336	8913	-18725
Construction/maintenance, +5°C	150C1F1	0	0	0	7593	29581	-62346
Permanent loads yg= 0.9	150C1F2	0	0	0	7593	29541	-62348
Wind angle: 0°	150C1F3	0	0	0	7593	29492	-62351
	380C2F1	0	0	0	15186	59161	-124693
	380C2F2	0	0	0	15186	59082	-124695
	380C2F3	0	0	0	15186	58984	-124702
	RTG	0	0	0	4667	17663	-37380
NL3/1a	GW / opgw	0	0	0	1735	13344	-22377
Wind, 10°C	150C1F1	0	0	0	6393	41605	-71713
Permanent loads yg= 0.9	150C1F2	0	0	0	6392	39839	-69303
Wind angle: 45°	150C1F3	0	0	0	6392	37633	-66331
	380C2F1	0	0	0	12785	83209	-143427
	380C2F2	0	0	0	12785	79677	-138605
	380C2F3	0	0	0	12784	75266	-132662
	RTG	0	0	0	3465	20757	-36495
NL3/1b	GW / opgw	0	0	0	1734	9072	-17537
Wind, -20°C	150C1F1	0	0	0	6387	32408	-64118
Permanent loads yg= 0.9	150C1F2	0	0	0	6387	32054	-63780
Wind angle: 45°	150C1F3	0	0	0	6387	31621	-63392
	380C2F1	0	0	0	12774	64817	-128235
	380C2F2	0	0	0	12774	64107	-127560
	380C2F3	0	0	0	12774	63242	-126784
	RTG	0	0	0	3463	16742	-33438
NL3/3	GW / opgw	0	0	0	3306	20937	-35040
Wind, -5°C	150C1F1	0	0	0	7771	43648	-78562
Permanent loads yg= 0.9	150C1F2	0	0	0	7771	42300	-76853
Wind angle: 45°	150C1F3	0	0	0	7770	40637	-74797
	380C2F1	0	0	0	15542	87296	-157124
	380C2F2	0	0	0	15541	84600	-153707
	380C2F3	0	0	0	15541	81274	-149593
	RTG	0	0	0	6612	33762	-59771
NL3/4	GW / opgw	0	0	0	2336	9895	-19301
Construction/maintenance, +5°C	150C1F1	0	0	0	7593	32206	-63680
Permanent loads yg= 0.9	150C1F2	0	0	0	7593	31893	-63432
Wind angle: 45°	150C1F3	0	0	0	7593	31509	-63151
	380C2F1	0	0	0	15187	64412	-127360
	380C2F2	0	0	0	15187	63786	-126864
	380C2F3	0	0	0	15186	63019	-126301
	RTG	0	0	0	4667	18753	-37748
NL3/1a	GW / opgw	0	0	0	1735	12751	-21541
Wind, 10°C	150C1F1	0	0	0	6392	40035	-69569
Permanent loads yg= 0.9	150C1F2	0	0	0	6392	38418	-67383
Wind angle: 90°	150C1F3	0	0	0	6392	36405	-64701
	380C2F1	0	0	0	12785	80070	-139139
	380C2F2	0	0	0	12784	76836	-134766
	380C2F3	0	0	0	12784	72810	-129403
	RTG	0	0	0	3465	20054	-35547
NL3/1b	GW / opgw	0	0	0	1734	8943	-17393
Wind, -20°C	150C1F1	0	0	0	6387	32093	-63816
Permanent loads yg= 0.9	150C1F2	0	0	0	6387	31774	-63526
Wind angle: 90°	150C1F3	0	0	0	6387	31384	-63193
	380C2F1	0	0	0	12774	64186	-127633
	380C2F2	0	0	0	12774	63547	-127051
	380C2F3	0	0	0	12774	62768	-126386
	RTG	0	0	0	3463	16607	-33320
NL3/3	GW / opgw	0	0	0	3306	20126	-33990
Wind, -5°C	150C1F1	0	0	0	7771	42449	-77041
Permanent loads yg= 0.9	150C1F2	0	0	0	7771	41226	-75518
Wind angle: 90°	150C1F3	0	0	0	7770	39721	-73694
	380C2F1	0	0	0	15541	84898	-154082
	380C2F2	0	0	0	15541	82452	-151036
	380C2F3	0	0	0	15541	79441	-147388
	RTG	0	0	0	6612	32826	-58647

NL3/4	GW / opgw	0	0	0	2336	9790	-19209
Construction/maintenance, +5°C	150C1F1	0	0	0	7593	31927	-63459
Permanent loads yg= 0.9	150C1F2	0	0	0	7593	31645	-63247
Wind angle: 90°	150C1F3	0	0	0	7593	31299	-63008
	380C2F1	0	0	0	15187	63855	-126917
	380C2F2	0	0	0	15186	63290	-126494
	380C2F3	0	0	0	15186	62598	-126016
	RTG	0	0	0	4667	18640	-37679
NL3/1a	GW / opgw	0	0	0	1735	7127	-14457
Wind, 10°C	150C1F1	0	0	0	6390	25843	-53102
Permanent loads yg= 0.9	150C1F2	0	0	0	6390	25737	-53057
Wind angle: -45°	150C1F3	0	0	0	6390	25607	-53010
	380C2F1	0	0	0	12781	51686	-106203
	380C2F2	0	0	0	12781	51475	-106115
	380C2F3	0	0	0	12781	51213	-106020
	RTG	0	0	0	3464	13874	-28690
NL3/1b	GW / opgw	0	0	0	1734	7831	-16541
Wind, -20°C	150C1F1	0	0	0	6387	29325	-62175
Permanent loads yg= 0.9	150C1F2	0	0	0	6387	29300	-62177
Wind angle: -45°	150C1F3	0	0	0	6387	29268	-62181
	380C2F1	0	0	0	12774	58650	-124349
	380C2F2	0	0	0	12774	58600	-124354
	380C2F3	0	0	0	12774	58537	-124361
	RTG	0	0	0	3463	15405	-32709
NL3/3	GW / opgw	0	0	0	3304	12574	-25660
Wind, -5°C	150C1F1	0	0	0	7769	31994	-66620
Permanent loads yg= 0.9	150C1F2	0	0	0	7769	31913	-66602
Wind angle: -45°	150C1F3	0	0	0	7769	31812	-66585
	380C2F1	0	0	0	15538	63989	-133240
	380C2F2	0	0	0	15538	63826	-133204
	380C2F3	0	0	0	15538	63624	-133170
	RTG	0	0	0	6610	24584	-51049
NL3/4	GW / opgw	0	0	0	2336	8851	-18727
Construction/maintenance, +5°C	150C1F1	0	0	0	7593	29412	-62361
Permanent loads yg= 0.9	150C1F2	0	0	0	7593	29388	-62365
Wind angle: -45°	150C1F3	0	0	0	7593	29357	-62371
	380C2F1	0	0	0	15186	58824	-124722
	380C2F2	0	0	0	15186	58776	-124730
	380C2F3	0	0	0	15186	58714	-124742
	RTG	0	0	0	4667	17589	-37393

ZWW4HL400

Loadcases for tower strength (Special limit state)

		Ahead			Back		
Loadcase according to 50341-3-15	Att. Point	Vertical [N]	Transversal [N]	Longitudinal [N]	Vertical [N]	Transversal [N]	Longitudinal [N]
NL3/1a	GW / opgw	2313	9177	18418	0	0	0
Wind, 10°C	150C1F1	8523	32999	67226	0	0	0
Permanent loads yg= 1.2	150C1F2	8523	32835	67152	0	0	0
Wind angle: 0°	150C1F3	8522	32632	67072	0	0	0
	380C2F1	17045	65999	134453	0	0	0
	380C2F2	17045	65670	134305	0	0	0
	380C2F3	17045	65264	134145	0	0	0
	RTG	0	0	0	0	0	0
NL3/1b	GW / opgw	2312	9804	20637	0	0	0
Wind, -20°C	150C1F1	8518	36364	76893	0	0	0
Permanent loads yg= 1.2	150C1F2	8518	36325	76896	0	0	0
Wind angle: 0°	150C1F3	8518	36277	76901	0	0	0
	380C2F1	17036	72727	153787	0	0	0
	380C2F2	17036	72650	153792	0	0	0
	380C2F3	17036	72553	153803	0	0	0
	RTG	0	0	0	0	0	0
NL3/3	GW / opgw	3883	14529	29165	0	0	0
Wind, -5°C	150C1F1	9901	38892	80361	0	0	0
Permanent loads yg= 1.2	150C1F2	9901	38764	80327	0	0	0
Wind angle: 0°	150C1F3	9901	38605	80291	0	0	0
	380C2F1	19802	77784	160723	0	0	0
	380C2F2	19802	77528	160653	0	0	0
	380C2F3	19802	77210	160582	0	0	0
	RTG	0	0	0	0	0	0
NL3/4	GW / opgw	2915	10616	22378	0	0	0
Construction/maintenance, +5°C	150C1F1	9725	35903	75906	0	0	0
Permanent loads yg= 1.2	150C1F2	9725	35866	75911	0	0	0
Wind angle: 0°	150C1F3	9725	35819	75919	0	0	0
	380C2F1	19451	71807	151812	0	0	0
	380C2F2	19451	71732	151822	0	0	0
	380C2F3	19451	71637	151837	0	0	0
	RTG	0	0	0	0	0	0
NL3/1a	GW / opgw	2313	8906	18274	0	0	0
Wind, 10°C	150C1F1	8522	32312	66975	0	0	0
Permanent loads yg= 1.2	150C1F2	8522	32218	66954	0	0	0
Wind angle: 45°	150C1F3	8522	32100	66934	0	0	0
	380C2F1	17045	64625	133950	0	0	0
	380C2F2	17045	64435	133908	0	0	0
	380C2F3	17045	64199	133867	0	0	0
	RTG	0	0	0	0	0	0
NL3/1b	GW / opgw	2312	9742	20639	0	0	0
Wind, -20°C	150C1F1	8518	36198	76913	0	0	0
Permanent loads yg= 1.2	150C1F2	8518	36174	76918	0	0	0
Wind angle: 45°	150C1F3	8518	36144	76925	0	0	0
	380C2F1	17036	72396	153827	0	0	0
	380C2F2	17036	72348	153836	0	0	0
	380C2F3	17036	72287	153850	0	0	0
	RTG	0	0	0	0	0	0
NL3/3	GW / opgw	3883	14130	28996	0	0	0
Wind, -5°C	150C1F1	9901	38353	80255	0	0	0
Permanent loads yg= 1.2	150C1F2	9901	38277	80249	0	0	0
Wind angle: 45°	150C1F3	9901	38182	80246	0	0	0
	380C2F1	19802	76705	160510	0	0	0
	380C2F2	19802	76554	160499	0	0	0
	380C2F3	19802	76365	160493	0	0	0
	RTG	0	0	0	0	0	0
NL3/4	GW / opgw	2915	10557	22386	0	0	0
Construction/maintenance, +5°C	150C1F1	9725	35742	75935	0	0	0
Permanent loads yg= 1.2	150C1F2	9725	35718	75940	0	0	0
Wind angle: 45°	150C1F3	9725	35688	75948	0	0	0
	380C2F1	19451	71483	151869	0	0	0
	380C2F2	19451	71436	151881	0	0	0
	380C2F3	19451	71377	151896	0	0	0
	RTG	0	0	0	0	0	0
NL3/1a	GW / opgw	2314	13771	23728	0	0	0
Wind, 10°C	150C1F1	8524	44435	79003	0	0	0
Permanent loads yg= 1.2	150C1F2	8524	43026	77263	0	0	0
Wind angle: 90°	150C1F3	8524	41289	75172	0	0	0
	380C2F1	17049	88869	158005	0	0	0
	380C2F2	17048	86053	154526	0	0	0
	380C2F3	17048	82578	150345	0	0	0
	RTG	0	0	0	0	0	0

NL3/1b	GW / opgw	2312	10699	21159	0	0	0
Wind, -20°C	150C1F1	8518	38623	77820	0	0	0
Permanent loads yg= 1.2	150C1F2	8518	38354	77637	0	0	0
Wind angle: 90°	150C1F3	8518	38024	77431	0	0	0
	380C2F1	17036	77247	155640	0	0	0
	380C2F2	17036	76709	155273	0	0	0
	380C2F3	17036	76048	154861	0	0	0
	RTG	0	0	0	0	0	0
NL3/3	GW / opgw	3885	21080	36034	0	0	0
Wind, -5°C	150C1F1	9903	47463	87791	0	0	0
Permanent loads yg= 1.2	150C1F2	9902	46400	86612	0	0	0
Wind angle: 90°	150C1F3	9902	45097	85222	0	0	0
	380C2F1	19805	94927	175583	0	0	0
	380C2F2	19805	92801	173223	0	0	0
	380C2F3	19804	90194	170443	0	0	0
	RTG	0	0	0	0	0	0
NL3/4	GW / opgw	2915	11412	22688	0	0	0
Construction/maintenance, +5°C	150C1F1	9726	38027	76538	0	0	0
Permanent loads yg= 1.2	150C1F2	9726	37779	76399	0	0	0
Wind angle: 90°	150C1F3	9725	37473	76246	0	0	0
	380C2F1	19451	76053	153076	0	0	0
	380C2F2	19451	75557	152799	0	0	0
	380C2F3	19451	74945	152493	0	0	0
	RTG	0	0	0	0	0	0
NL3/1a	GW / opgw	2314	14308	24444	0	0	0
Wind, 10°C	150C1F1	8525	45813	80736	0	0	0
Permanent loads yg= 1.2	150C1F2	8524	44263	78789	0	0	0
Wind angle: -45°	150C1F3	8524	42347	76437	0	0	0
	380C2F1	17049	91626	161472	0	0	0
	380C2F2	17049	88526	157578	0	0	0
	380C2F3	17048	84693	152874	0	0	0
	RTG	0	0	0	0	0	0
NL3/1b	GW / opgw	2312	10807	21256	0	0	0
Wind, -20°C	150C1F1	8518	38889	78013	0	0	0
Permanent loads yg= 1.2	150C1F2	8518	38591	77797	0	0	0
Wind angle: -45°	150C1F3	8518	38225	77553	0	0	0
	380C2F1	17036	77777	156027	0	0	0
	380C2F2	17036	77181	155594	0	0	0
	380C2F3	17036	76450	155107	0	0	0
	RTG	0	0	0	0	0	0
NL3/3	GW / opgw	3885	21841	36979	0	0	0
Wind, -5°C	150C1F1	9903	48510	88986	0	0	0
Permanent loads yg= 1.2	150C1F2	9903	47334	87645	0	0	0
Wind angle: -45°	150C1F3	9902	45889	86059	0	0	0
	380C2F1	19806	97020	177971	0	0	0
	380C2F2	19805	94667	175291	0	0	0
	380C2F3	19805	91779	172118	0	0	0
	RTG	0	0	0	0	0	0
NL3/4	GW / opgw	2915	11505	22754	0	0	0
Construction/maintenance, +5°C	150C1F1	9726	38271	76685	0	0	0
Permanent loads yg= 1.2	150C1F2	9726	37996	76520	0	0	0
Wind angle: -45°	150C1F3	9725	37659	76337	0	0	0
	380C2F1	19451	76541	153370	0	0	0
	380C2F2	19451	75993	153041	0	0	0
	380C2F3	19451	75318	152674	0	0	0
	RTG	0	0	0	0	0	0
NL3/1a	GW / opgw	1735	7440	14693	0	0	0
Wind, 10°C	150C1F1	6391	26623	53552	0	0	0
Permanent loads yg= 0.9	150C1F2	6391	26434	53426	0	0	0
Wind angle: 0°	150C1F3	6390	26203	53285	0	0	0
	380C2F1	12781	53245	107104	0	0	0
	380C2F2	12781	52868	106853	0	0	0
	380C2F3	12781	52405	106571	0	0	0
	RTG	0	0	0	0	0	0
NL3/1b	GW / opgw	1734	7898	16549	0	0	0
Wind, -20°C	150C1F1	6387	29501	62176	0	0	0
Permanent loads yg= 0.9	150C1F2	6387	29460	62173	0	0	0
Wind angle: 0°	150C1F3	6387	29408	62172	0	0	0
	380C2F1	12774	59002	124352	0	0	0
	380C2F2	12774	58919	124347	0	0	0
	380C2F3	12774	58816	124344	0	0	0
	RTG	0	0	0	0	0	0

NL3/3	GW / opgw	3304	13004	25894	0	0	0
Wind, -5°C	150C1F1	7769	32583	66833	0	0	0
Permanent loads yg= 0.9	150C1F2	7769	32443	66770	0	0	0
Wind angle: 0°	150C1F3	7769	32268	66702	0	0	0
	380C2F1	15538	65167	133667	0	0	0
	380C2F2	15538	64885	133541	0	0	0
	380C2F3	15538	64537	133405	0	0	0
	RTG	0	0	0	0	0	0
NL3/4	GW / opgw	2336	8913	18725	0	0	0
Construction/maintenance, +5°C	150C1F1	7593	29581	62346	0	0	0
Permanent loads yg= 0.9	150C1F2	7593	29541	62348	0	0	0
Wind angle: 0°	150C1F3	7593	29492	62351	0	0	0
	380C2F1	15186	59161	124693	0	0	0
	380C2F2	15186	59082	124695	0	0	0
	380C2F3	15186	58984	124702	0	0	0
	RTG	0	0	0	0	0	0
NL3/1a	GW / opgw	1735	7127	14457	0	0	0
Wind, 10°C	150C1F1	6390	25843	53102	0	0	0
Permanent loads yg= 0.9	150C1F2	6390	25737	53057	0	0	0
Wind angle: 45°	150C1F3	6390	25607	53010	0	0	0
	380C2F1	12781	51686	106203	0	0	0
	380C2F2	12781	51475	106115	0	0	0
	380C2F3	12781	51213	106020	0	0	0
	RTG	0	0	0	0	0	0
NL3/1b	GW / opgw	1734	7831	16541	0	0	0
Wind, -20°C	150C1F1	6387	29325	62175	0	0	0
Permanent loads yg= 0.9	150C1F2	6387	29300	62177	0	0	0
Wind angle: 45°	150C1F3	6387	29268	62181	0	0	0
	380C2F1	12774	58650	124349	0	0	0
	380C2F2	12774	58600	124354	0	0	0
	380C2F3	12774	58537	124361	0	0	0
	RTG	0	0	0	0	0	0
NL3/3	GW / opgw	3304	12574	25660	0	0	0
Wind, -5°C	150C1F1	7769	31994	66620	0	0	0
Permanent loads yg= 0.9	150C1F2	7769	31913	66602	0	0	0
Wind angle: 45°	150C1F3	7769	31812	66585	0	0	0
	380C2F1	15538	63989	133240	0	0	0
	380C2F2	15538	63826	133204	0	0	0
	380C2F3	15538	63624	133170	0	0	0
	RTG	0	0	0	0	0	0
NL3/4	GW / opgw	2336	8851	18727	0	0	0
Construction/maintenance, +5°C	150C1F1	7593	29412	62361	0	0	0
Permanent loads yg= 0.9	150C1F2	7593	29388	62365	0	0	0
Wind angle: 45°	150C1F3	7593	29357	62371	0	0	0
	380C2F1	15186	58824	124722	0	0	0
	380C2F2	15186	58776	124730	0	0	0
	380C2F3	15186	58714	124742	0	0	0
	RTG	0	0	0	0	0	0
NL3/1a	GW / opgw	1735	12751	21541	0	0	0
Wind, 10°C	150C1F1	6392	40035	69569	0	0	0
Permanent loads yg= 0.9	150C1F2	6392	38418	67383	0	0	0
Wind angle: 90°	150C1F3	6392	36405	64701	0	0	0
	380C2F1	12785	80070	139139	0	0	0
	380C2F2	12784	76836	134766	0	0	0
	380C2F3	12784	72810	129403	0	0	0
	RTG	0	0	0	0	0	0
NL3/1b	GW / opgw	1734	8943	17393	0	0	0
Wind, -20°C	150C1F1	6387	32093	63816	0	0	0
Permanent loads yg= 0.9	150C1F2	6387	31774	63526	0	0	0
Wind angle: 90°	150C1F3	6387	31384	63193	0	0	0
	380C2F1	12774	64186	127633	0	0	0
	380C2F2	12774	63547	127051	0	0	0
	380C2F3	12774	62768	126386	0	0	0
	RTG	0	0	0	0	0	0
NL3/3	GW / opgw	3306	20126	33990	0	0	0
Wind, -5°C	150C1F1	7771	42449	77041	0	0	0
Permanent loads yg= 0.9	150C1F2	7771	41226	75518	0	0	0
Wind angle: 90°	150C1F3	7770	39721	73694	0	0	0
	380C2F1	15541	84898	154082	0	0	0
	380C2F2	15541	82452	151036	0	0	0
	380C2F3	15541	79441	147388	0	0	0
	RTG	0	0	0	0	0	0

NL3/4	GW / opgw	2336	9790	19209	0	0	0
Construction/maintenance, +5°C	150C1F1	7593	31927	63459	0	0	0
Permanent loads yg= 0.9	150C1F2	7593	31645	63247	0	0	0
Wind angle: 90°	150C1F3	7593	31299	63008	0	0	0
	380C2F1	15187	63855	126917	0	0	0
	380C2F2	15186	63290	126494	0	0	0
	380C2F3	15186	62598	126016	0	0	0
	RTG	0	0	0	0	0	0
NL3/1a	GW / opgw	1735	13344	22377	0	0	0
Wind, 10°C	150C1F1	6393	41605	71713	0	0	0
Permanent loads yg= 0.9	150C1F2	6392	39839	69303	0	0	0
Wind angle: -45°	150C1F3	6392	37633	66331	0	0	0
	380C2F1	12785	83209	143427	0	0	0
	380C2F2	12785	79677	138605	0	0	0
	380C2F3	12784	75266	132662	0	0	0
	RTG	0	0	0	0	0	0
NL3/1b	GW / opgw	1734	9072	17537	0	0	0
Wind, -20°C	150C1F1	6387	32408	64118	0	0	0
Permanent loads yg= 0.9	150C1F2	6387	32054	63780	0	0	0
Wind angle: -45°	150C1F3	6387	31621	63392	0	0	0
	380C2F1	12774	64817	128235	0	0	0
	380C2F2	12774	64107	127560	0	0	0
	380C2F3	12774	63242	126784	0	0	0
	RTG	0	0	0	0	0	0
NL3/3	GW / opgw	3306	20937	35040	0	0	0
Wind, -5°C	150C1F1	7771	43648	78562	0	0	0
Permanent loads yg= 0.9	150C1F2	7771	42300	76853	0	0	0
Wind angle: -45°	150C1F3	7770	40637	74797	0	0	0
	380C2F1	15542	87296	157124	0	0	0
	380C2F2	15541	84600	153707	0	0	0
	380C2F3	15541	81274	149593	0	0	0
	RTG	0	0	0	0	0	0
NL3/4	GW / opgw	2336	9895	19301	0	0	0
Construction/maintenance, +5°C	150C1F1	7593	32206	63680	0	0	0
Permanent loads yg= 0.9	150C1F2	7593	31893	63432	0	0	0
Wind angle: -45°	150C1F3	7593	31509	63151	0	0	0
	380C2F1	15187	64412	127360	0	0	0
	380C2F2	15187	63786	126864	0	0	0
	380C2F3	15186	63019	126301	0	0	0
	RTG	0	0	0	0	0	0

ZWW4HL400

Loadcases for tower strength (Special limit state)

		Ahead			Back		
Loadcase according to 50341-3-15	Att. Point	Vertical [N]	Transversal [N]	Longitudinal [N]	Vertical [N]	Transversal [N]	Longitudinal [N]
NL3/1a	GW / opgw	2313	9177	18418	2313	9177	-18418
Wind, 10°C	150C1F1	8523	32999	67226	8523	32999	-67226
Permanent loads yg= 1.2	150C1F2	8523	32835	67152	8523	32835	-67152
Wind angle: 0°	150C1F3	8522	32632	67072	8522	32632	-67072
	380C2F1	0	0	0	0	0	0
	380C2F2	0	0	0	0	0	0
	380C2F3	0	0	0	0	0	0
	RTG	0	0	0	0	0	0
NL3/1b	GW / opgw	2312	9804	20637	2312	9804	-20637
Wind, -20°C	150C1F1	8518	36364	76893	8518	36364	-76893
Permanent loads yg= 1.2	150C1F2	8518	36325	76896	8518	36325	-76896
Wind angle: 0°	150C1F3	8518	36277	76901	8518	36277	-76901
	380C2F1	0	0	0	0	0	0
	380C2F2	0	0	0	0	0	0
	380C2F3	0	0	0	0	0	0
	RTG	0	0	0	0	0	0
NL3/3	GW / opgw	3883	14529	29165	3883	14529	-29165
Wind, -5°C	150C1F1	9901	38892	80361	9901	38892	-80361
Permanent loads yg= 1.2	150C1F2	9901	38764	80327	9901	38764	-80327
Wind angle: 0°	150C1F3	9901	38605	80291	9901	38605	-80291
	380C2F1	0	0	0	0	0	0
	380C2F2	0	0	0	0	0	0
	380C2F3	0	0	0	0	0	0
	RTG	0	0	0	0	0	0
NL3/4	GW / opgw	2915	10616	22378	2915	10616	-22378
Construction/maintenance, +5°C	150C1F1	9725	35903	75906	9725	35903	-75906
Permanent loads yg= 1.2	150C1F2	9725	35866	75911	9725	35866	-75911
Wind angle: 0°	150C1F3	9725	35819	75919	9725	35819	-75919
	380C2F1	0	0	0	0	0	0
	380C2F2	0	0	0	0	0	0
	380C2F3	0	0	0	0	0	0
	RTG	0	0	0	0	0	0
NL3/1a	GW / opgw	2313	8906	18274	2314	14308	-24444
Wind, 10°C	150C1F1	8522	32312	66975	8525	45813	-80736
Permanent loads yg= 1.2	150C1F2	8522	32218	66954	8524	44263	-78789
Wind angle: 45°	150C1F3	8522	32100	66934	8524	42347	-76437
	380C2F1	0	0	0	0	0	0
	380C2F2	0	0	0	0	0	0
	380C2F3	0	0	0	0	0	0
	RTG	0	0	0	0	0	0
NL3/1b	GW / opgw	2312	9742	20639	2312	10807	-21256
Wind, -20°C	150C1F1	8518	36198	76913	8518	38889	-78013
Permanent loads yg= 1.2	150C1F2	8518	36174	76918	8518	38591	-77797
Wind angle: 45°	150C1F3	8518	36144	76925	8518	38225	-77553
	380C2F1	0	0	0	0	0	0
	380C2F2	0	0	0	0	0	0
	380C2F3	0	0	0	0	0	0
	RTG	0	0	0	0	0	0
NL3/3	GW / opgw	3883	14130	28996	3885	21841	-36979
Wind, -5°C	150C1F1	9901	38353	80255	9903	48510	-88986
Permanent loads yg= 1.2	150C1F2	9901	38277	80249	9903	47334	-87645
Wind angle: 45°	150C1F3	9901	38182	80246	9902	45889	-86059
	380C2F1	0	0	0	0	0	0
	380C2F2	0	0	0	0	0	0
	380C2F3	0	0	0	0	0	0
	RTG	0	0	0	0	0	0
NL3/4	GW / opgw	2915	10557	22386	2915	11505	-22754
Construction/maintenance, +5°C	150C1F1	9725	35742	75935	9726	38271	-76685
Permanent loads yg= 1.2	150C1F2	9725	35718	75940	9726	37996	-76520
Wind angle: 45°	150C1F3	9725	35688	75948	9725	37659	-76337
	380C2F1	0	0	0	0	0	0
	380C2F2	0	0	0	0	0	0
	380C2F3	0	0	0	0	0	0
	RTG	0	0	0	0	0	0
NL3/1a	GW / opgw	2314	13771	23728	2314	13771	-23728
Wind, 10°C	150C1F1	8524	44435	79003	8524	44435	-79003
Permanent loads yg= 1.2	150C1F2	8524	43026	77263	8524	43026	-77263
Wind angle: 90°	150C1F3	8524	41289	75172	8524	41289	-75172
	380C2F1	0	0	0	0	0	0
	380C2F2	0	0	0	0	0	0
	380C2F3	0	0	0	0	0	0
	RTG	0	0	0	0	0	0

NL3/1b	GW / opgw	2312	10699	21159	2312	10699	-21159
Wind, -20°C	150C1F1	8518	38623	77820	8518	38623	-77820
Permanent loads yg= 1.2	150C1F2	8518	38354	77637	8518	38354	-77637
Wind angle: 90°	150C1F3	8518	38024	77431	8518	38024	-77431
	380C2F1	0	0	0	0	0	0
	380C2F2	0	0	0	0	0	0
	380C2F3	0	0	0	0	0	0
	RTG	0	0	0	0	0	0
NL3/3	GW / opgw	3885	21080	36034	3885	21080	-36034
Wind, -5°C	150C1F1	9903	47463	87791	9903	47463	-87791
Permanent loads yg= 1.2	150C1F2	9902	46400	86612	9902	46400	-86612
Wind angle: 90°	150C1F3	9902	45097	85222	9902	45097	-85222
	380C2F1	0	0	0	0	0	0
	380C2F2	0	0	0	0	0	0
	380C2F3	0	0	0	0	0	0
	RTG	0	0	0	0	0	0
NL3/4	GW / opgw	2915	11412	22688	2915	11412	-22688
Construction/maintenance, +5°C	150C1F1	9726	38027	76538	9726	38027	-76538
Permanent loads yg= 1.2	150C1F2	9726	37779	76399	9726	37779	-76399
Wind angle: 90°	150C1F3	9725	37473	76246	9725	37473	-76246
	380C2F1	0	0	0	0	0	0
	380C2F2	0	0	0	0	0	0
	380C2F3	0	0	0	0	0	0
	RTG	0	0	0	0	0	0
NL3/1a	GW / opgw	2314	14308	24444	2313	8906	-18274
Wind, 10°C	150C1F1	8525	45813	80736	8522	32312	-66975
Permanent loads yg= 1.2	150C1F2	8524	44263	78789	8522	32218	-66954
Wind angle: -45°	150C1F3	8524	42347	76437	8522	32100	-66934
	380C2F1	0	0	0	0	0	0
	380C2F2	0	0	0	0	0	0
	380C2F3	0	0	0	0	0	0
	RTG	0	0	0	0	0	0
NL3/1b	GW / opgw	2312	10807	21256	2312	9742	-20639
Wind, -20°C	150C1F1	8518	38889	78013	8518	36198	-76913
Permanent loads yg= 1.2	150C1F2	8518	38591	77797	8518	36174	-76918
Wind angle: -45°	150C1F3	8518	38225	77553	8518	36144	-76925
	380C2F1	0	0	0	0	0	0
	380C2F2	0	0	0	0	0	0
	380C2F3	0	0	0	0	0	0
	RTG	0	0	0	0	0	0
NL3/3	GW / opgw	3885	21841	36979	3883	14130	-28996
Wind, -5°C	150C1F1	9903	48510	88986	9901	38353	-80255
Permanent loads yg= 1.2	150C1F2	9903	47334	87645	9901	38277	-80249
Wind angle: -45°	150C1F3	9902	45889	86059	9901	38182	-80246
	380C2F1	0	0	0	0	0	0
	380C2F2	0	0	0	0	0	0
	380C2F3	0	0	0	0	0	0
	RTG	0	0	0	0	0	0
NL3/4	GW / opgw	2915	11505	22754	2915	10557	-22386
Construction/maintenance, +5°C	150C1F1	9726	38271	76685	9725	35742	-75935
Permanent loads yg= 1.2	150C1F2	9726	37996	76520	9725	35718	-75940
Wind angle: -45°	150C1F3	9725	37659	76337	9725	35688	-75948
	380C2F1	0	0	0	0	0	0
	380C2F2	0	0	0	0	0	0
	380C2F3	0	0	0	0	0	0
	RTG	0	0	0	0	0	0
NL3/1a	GW / opgw	1735	7440	14693	1735	7440	-14693
Wind, 10°C	150C1F1	6391	26623	53552	6391	26623	-53552
Permanent loads yg= 0.9	150C1F2	6391	26434	53426	6391	26434	-53426
Wind angle: 0°	150C1F3	6390	26203	53285	6390	26203	-53285
	380C2F1	0	0	0	0	0	0
	380C2F2	0	0	0	0	0	0
	380C2F3	0	0	0	0	0	0
	RTG	0	0	0	0	0	0
NL3/1b	GW / opgw	1734	7898	16549	1734	7898	-16549
Wind, -20°C	150C1F1	6387	29501	62176	6387	29501	-62176
Permanent loads yg= 0.9	150C1F2	6387	29460	62173	6387	29460	-62173
Wind angle: 0°	150C1F3	6387	29408	62172	6387	29408	-62172
	380C2F1	0	0	0	0	0	0
	380C2F2	0	0	0	0	0	0
	380C2F3	0	0	0	0	0	0
	RTG	0	0	0	0	0	0

NL3/3	GW / opgw	3304	13004	25894	3304	13004	-25894
Wind, -5°C	150C1F1	7769	32583	66833	7769	32583	-66833
Permanent loads yg= 0.9	150C1F2	7769	32443	66770	7769	32443	-66770
Wind angle: 0°	150C1F3	7769	32268	66702	7769	32268	-66702
	380C2F1	0	0	0	0	0	0
	380C2F2	0	0	0	0	0	0
	380C2F3	0	0	0	0	0	0
	RTG	0	0	0	0	0	0
NL3/4	GW / opgw	2336	8913	18725	2336	8913	-18725
Construction/maintenance, +5°C	150C1F1	7593	29581	62346	7593	29581	-62346
Permanent loads yg= 0.9	150C1F2	7593	29541	62348	7593	29541	-62348
Wind angle: 0°	150C1F3	7593	29492	62351	7593	29492	-62351
	380C2F1	0	0	0	0	0	0
	380C2F2	0	0	0	0	0	0
	380C2F3	0	0	0	0	0	0
	RTG	0	0	0	0	0	0
NL3/1a	GW / opgw	1735	7127	14457	1735	13344	-22377
Wind, 10°C	150C1F1	6390	25843	53102	6393	41605	-71713
Permanent loads yg= 0.9	150C1F2	6390	25737	53057	6392	39839	-69303
Wind angle: 45°	150C1F3	6390	25607	53010	6392	37633	-66331
	380C2F1	0	0	0	0	0	0
	380C2F2	0	0	0	0	0	0
	380C2F3	0	0	0	0	0	0
	RTG	0	0	0	0	0	0
NL3/1b	GW / opgw	1734	7831	16541	1734	9072	-17537
Wind, -20°C	150C1F1	6387	29325	62175	6387	32408	-64118
Permanent loads yg= 0.9	150C1F2	6387	29300	62177	6387	32054	-63780
Wind angle: 45°	150C1F3	6387	29268	62181	6387	31621	-63392
	380C2F1	0	0	0	0	0	0
	380C2F2	0	0	0	0	0	0
	380C2F3	0	0	0	0	0	0
	RTG	0	0	0	0	0	0
NL3/3	GW / opgw	3304	12574	25660	3306	20937	-35040
Wind, -5°C	150C1F1	7769	31994	66620	7771	43648	-78562
Permanent loads yg= 0.9	150C1F2	7769	31913	66602	7771	42300	-76853
Wind angle: 45°	150C1F3	7769	31812	66585	7770	40637	-74797
	380C2F1	0	0	0	0	0	0
	380C2F2	0	0	0	0	0	0
	380C2F3	0	0	0	0	0	0
	RTG	0	0	0	0	0	0
NL3/4	GW / opgw	2336	8851	18727	2336	9895	-19301
Construction/maintenance, +5°C	150C1F1	7593	29412	62361	7593	32206	-63680
Permanent loads yg= 0.9	150C1F2	7593	29388	62365	7593	31893	-63432
Wind angle: 45°	150C1F3	7593	29357	62371	7593	31509	-63151
	380C2F1	0	0	0	0	0	0
	380C2F2	0	0	0	0	0	0
	380C2F3	0	0	0	0	0	0
	RTG	0	0	0	0	0	0
NL3/1a	GW / opgw	1735	12751	21541	1735	12751	-21541
Wind, 10°C	150C1F1	6392	40035	69569	6392	40035	-69569
Permanent loads yg= 0.9	150C1F2	6392	38418	67383	6392	38418	-67383
Wind angle: 90°	150C1F3	6392	36405	64701	6392	36405	-64701
	380C2F1	0	0	0	0	0	0
	380C2F2	0	0	0	0	0	0
	380C2F3	0	0	0	0	0	0
	RTG	0	0	0	0	0	0
NL3/1b	GW / opgw	1734	8943	17393	1734	8943	-17393
Wind, -20°C	150C1F1	6387	32093	63816	6387	32093	-63816
Permanent loads yg= 0.9	150C1F2	6387	31774	63526	6387	31774	-63526
Wind angle: 90°	150C1F3	6387	31384	63193	6387	31384	-63193
	380C2F1	0	0	0	0	0	0
	380C2F2	0	0	0	0	0	0
	380C2F3	0	0	0	0	0	0
	RTG	0	0	0	0	0	0
NL3/3	GW / opgw	3306	20126	33990	3306	20126	-33990
Wind, -5°C	150C1F1	7771	42449	77041	7771	42449	-77041
Permanent loads yg= 0.9	150C1F2	7771	41226	75518	7771	41226	-75518
Wind angle: 90°	150C1F3	7770	39721	73694	7770	39721	-73694
	380C2F1	0	0	0	0	0	0
	380C2F2	0	0	0	0	0	0
	380C2F3	0	0	0	0	0	0
	RTG	0	0	0	0	0	0

NL3/4	GW / opgw	2336	9790	19209	2336	9790	-19209
Construction/maintenance, +5°C	150C1F1	7593	31927	63459	7593	31927	-63459
Permanent loads yg= 0.9	150C1F2	7593	31645	63247	7593	31645	-63247
Wind angle: 90°	150C1F3	7593	31299	63008	7593	31299	-63008
	380C2F1	0	0	0	0	0	0
	380C2F2	0	0	0	0	0	0
	380C2F3	0	0	0	0	0	0
	RTG	0	0	0	0	0	0
NL3/1a	GW / opgw	1735	13344	22377	1735	7127	-14457
Wind, 10°C	150C1F1	6393	41605	71713	6390	25843	-53102
Permanent loads yg= 0.9	150C1F2	6392	39839	69303	6390	25737	-53057
Wind angle: -45°	150C1F3	6392	37633	66331	6390	25607	-53010
	380C2F1	0	0	0	0	0	0
	380C2F2	0	0	0	0	0	0
	380C2F3	0	0	0	0	0	0
	RTG	0	0	0	0	0	0
NL3/1b	GW / opgw	1734	9072	17537	1734	7831	-16541
Wind, -20°C	150C1F1	6387	32408	64118	6387	29325	-62175
Permanent loads yg= 0.9	150C1F2	6387	32054	63780	6387	29300	-62177
Wind angle: -45°	150C1F3	6387	31621	63392	6387	29268	-62181
	380C2F1	0	0	0	0	0	0
	380C2F2	0	0	0	0	0	0
	380C2F3	0	0	0	0	0	0
	RTG	0	0	0	0	0	0
NL3/3	GW / opgw	3306	20937	35040	3304	12574	-25660
Wind, -5°C	150C1F1	7771	43648	78562	7769	31994	-66620
Permanent loads yg= 0.9	150C1F2	7771	42300	76853	7769	31913	-66602
Wind angle: -45°	150C1F3	7770	40637	74797	7769	31812	-66585
	380C2F1	0	0	0	0	0	0
	380C2F2	0	0	0	0	0	0
	380C2F3	0	0	0	0	0	0
	RTG	0	0	0	0	0	0
NL3/4	GW / opgw	2336	9895	19301	2336	8851	-18727
Construction/maintenance, +5°C	150C1F1	7593	32206	63680	7593	29412	-62361
Permanent loads yg= 0.9	150C1F2	7593	31893	63432	7593	29388	-62365
Wind angle: -45°	150C1F3	7593	31509	63151	7593	29357	-62371
	380C2F1	0	0	0	0	0	0
	380C2F2	0	0	0	0	0	0
	380C2F3	0	0	0	0	0	0
	RTG	0	0	0	0	0	0

ZWW4HL400

Loadcases for tower strength (Special limit state)

		Ahead			Back		
Loadcase according to 50341-3-15	Att. Point	Vertical [N]	Transversal [N]	Longitudinal [N]	Vertical [N]	Transversal [N]	Longitudinal [N]
NL3/1a	GW / opgw	0	0	0	0	0	0
Wind, 10°C	150C1F1	0	0	0	0	0	0
Permanent loads yg= 1.2	150C1F2	0	0	0	0	0	0
Wind angle: 0°	150C1F3	0	0	0	0	0	0
	380C2F1	17045	65999	134453	17045	65999	-134453
	380C2F2	17045	65670	134305	17045	65670	-134305
	380C2F3	17045	65264	134145	17045	65264	-134145
	RTG	0	0	0	4620	17777	-36500
NL3/1b	GW / opgw	0	0	0	0	0	0
Wind, -20°C	150C1F1	0	0	0	0	0	0
Permanent loads yg= 1.2	150C1F2	0	0	0	0	0	0
Wind angle: 0°	150C1F3	0	0	0	0	0	0
	380C2F1	17036	72727	153787	17036	72727	-153787
	380C2F2	17036	72650	153792	17036	72650	-153792
	380C2F3	17036	72553	153803	17036	72553	-153803
	RTG	0	0	0	4618	19300	-40891
NL3/3	GW / opgw	0	0	0	0	0	0
Wind, -5°C	150C1F1	0	0	0	0	0	0
Permanent loads yg= 1.2	150C1F2	0	0	0	0	0	0
Wind angle: 0°	150C1F3	0	0	0	0	0	0
	380C2F1	19802	77784	160723	19802	77784	-160723
	380C2F2	19802	77528	160653	19802	77528	-160653
	380C2F3	19802	77210	160582	19802	77210	-160582
	RTG	0	0	0	7767	28176	-57870
NL3/4	GW / opgw	0	0	0	0	0	0
Construction/maintenance, +5°C	150C1F1	0	0	0	0	0	0
Permanent loads yg= 1.2	150C1F2	0	0	0	0	0	0
Wind angle: 0°	150C1F3	0	0	0	0	0	0
	380C2F1	19451	71807	151812	19451	71807	-151812
	380C2F2	19451	71732	151822	19451	71732	-151822
	380C2F3	19451	71637	151837	19451	71637	-151837
	RTG	0	0	0	5823	21078	-44703
NL3/1a	GW / opgw	0	0	0	0	0	0
Wind, 10°C	150C1F1	0	0	0	0	0	0
Permanent loads yg= 1.2	150C1F2	0	0	0	0	0	0
Wind angle: 45°	150C1F3	0	0	0	0	0	0
	380C2F1	17045	64625	133950	17049	91626	-161472
	380C2F2	17045	64435	133908	17049	88526	-157578
	380C2F3	17045	64199	133867	17048	84693	-152874
	RTG	0	0	0	4621	23345	-42043
NL3/1b	GW / opgw	0	0	0	0	0	0
Wind, -20°C	150C1F1	0	0	0	0	0	0
Permanent loads yg= 1.2	150C1F2	0	0	0	0	0	0
Wind angle: 45°	150C1F3	0	0	0	0	0	0
	380C2F1	17036	72396	153827	17036	77777	-156027
	380C2F2	17036	72348	153836	17036	77181	-155594
	380C2F3	17036	72287	153850	17036	76450	-155107
	RTG	0	0	0	4618	20406	-41295
NL3/3	GW / opgw	0	0	0	0	0	0
Wind, -5°C	150C1F1	0	0	0	0	0	0
Permanent loads yg= 1.2	150C1F2	0	0	0	0	0	0
Wind angle: 45°	150C1F3	0	0	0	0	0	0
	380C2F1	19802	76705	160510	19806	97020	-177971
	380C2F2	19802	76554	160499	19805	94667	-175291
	380C2F3	19802	76365	160493	19805	91779	-172118
	RTG	0	0	0	7768	36134	-64856
NL3/4	GW / opgw	0	0	0	0	0	0
Construction/maintenance, +5°C	150C1F1	0	0	0	0	0	0
Permanent loads yg= 1.2	150C1F2	0	0	0	0	0	0
Wind angle: 45°	150C1F3	0	0	0	0	0	0
	380C2F1	19451	71483	151869	19451	76541	-153370
	380C2F2	19451	71436	151881	19451	75993	-153041
	380C2F3	19451	71377	151896	19451	75318	-152674
	RTG	0	0	0	5823	22087	-44897
NL3/1a	GW / opgw	0	0	0	0	0	0
Wind, 10°C	150C1F1	0	0	0	0	0	0
Permanent loads yg= 1.2	150C1F2	0	0	0	0	0	0
Wind angle: 90°	150C1F3	0	0	0	0	0	0
	380C2F1	17049	88869	158005	17049	88869	-158005
	380C2F2	17048	86053	154526	17048	86053	-154526
	380C2F3	17048	82578	150345	17048	82578	-150345
	RTG	0	0	0	4621	22737	-41301

NL3/1b	GW / opgw	0	0	0	0	0	0
Wind, -20°C	150C1F1	0	0	0	0	0	0
Permanent loads yg= 1.2	150C1F2	0	0	0	0	0	0
Wind angle: 90°	150C1F3	0	0	0	0	0	0
	380C2F1	17036	77247	155640	17036	77247	-155640
	380C2F2	17036	76709	155273	17036	76709	-155273
	380C2F3	17036	76048	154861	17036	76048	-154861
	RTG	0	0	0	4618	20291	-41221
NL3/3	GW / opgw	0	0	0	0	0	0
Wind, -5°C	150C1F1	0	0	0	0	0	0
Permanent loads yg= 1.2	150C1F2	0	0	0	0	0	0
Wind angle: 90°	150C1F3	0	0	0	0	0	0
	380C2F1	19805	94927	175583	19805	94927	-175583
	380C2F2	19805	92801	173223	19805	92801	-173223
	380C2F3	19804	90194	170443	19804	90194	-170443
	RTG	0	0	0	7768	35276	-63898
NL3/4	GW / opgw	0	0	0	0	0	0
Construction/maintenance, +5°C	150C1F1	0	0	0	0	0	0
Permanent loads yg= 1.2	150C1F2	0	0	0	0	0	0
Wind angle: 90°	150C1F3	0	0	0	0	0	0
	380C2F1	19451	76053	153076	19451	76053	-153076
	380C2F2	19451	75557	152799	19451	75557	-152799
	380C2F3	19451	74945	152493	19451	74945	-152493
	RTG	0	0	0	5823	21985	-44852
NL3/1a	GW / opgw	0	0	0	0	0	0
Wind, 10°C	150C1F1	0	0	0	0	0	0
Permanent loads yg= 1.2	150C1F2	0	0	0	0	0	0
Wind angle: -45°	150C1F3	0	0	0	0	0	0
	380C2F1	17049	91626	161472	17045	64625	-133950
	380C2F2	17049	88526	157578	17045	64435	-133908
	380C2F3	17048	84693	152874	17045	64199	-133867
	RTG	0	0	0	4620	17475	-36413
NL3/1b	GW / opgw	0	0	0	0	0	0
Wind, -20°C	150C1F1	0	0	0	0	0	0
Permanent loads yg= 1.2	150C1F2	0	0	0	0	0	0
Wind angle: -45°	150C1F3	0	0	0	0	0	0
	380C2F1	17036	77777	156027	17036	72396	-153827
	380C2F2	17036	77181	155594	17036	72348	-153836
	380C2F3	17036	76450	155107	17036	72287	-153850
	RTG	0	0	0	4618	19226	-40903
NL3/3	GW / opgw	0	0	0	0	0	0
Wind, -5°C	150C1F1	0	0	0	0	0	0
Permanent loads yg= 1.2	150C1F2	0	0	0	0	0	0
Wind angle: -45°	150C1F3	0	0	0	0	0	0
	380C2F1	19806	97020	177971	19802	76705	-160510
	380C2F2	19805	94667	175291	19802	76554	-160499
	380C2F3	19805	91779	172118	19802	76365	-160493
	RTG	0	0	0	7767	27725	-57784
NL3/4	GW / opgw	0	0	0	0	0	0
Construction/maintenance, +5°C	150C1F1	0	0	0	0	0	0
Permanent loads yg= 1.2	150C1F2	0	0	0	0	0	0
Wind angle: -45°	150C1F3	0	0	0	0	0	0
	380C2F1	19451	76541	153370	19451	71483	-151869
	380C2F2	19451	75993	153041	19451	71436	-151881
	380C2F3	19451	75318	152674	19451	71377	-151896
	RTG	0	0	0	5823	21006	-44720
NL3/1a	GW / opgw	0	0	0	0	0	0
Wind, 10°C	150C1F1	0	0	0	0	0	0
Permanent loads yg= 0.9	150C1F2	0	0	0	0	0	0
Wind angle: 0°	150C1F3	0	0	0	0	0	0
	380C2F1	12781	53245	107104	12781	53245	-107104
	380C2F2	12781	52868	106853	12781	52868	-106853
	380C2F3	12781	52405	106571	12781	52405	-106571
	RTG	0	0	0	3464	14212	-28857
NL3/1b	GW / opgw	0	0	0	0	0	0
Wind, -20°C	150C1F1	0	0	0	0	0	0
Permanent loads yg= 0.9	150C1F2	0	0	0	0	0	0
Wind angle: 0°	150C1F3	0	0	0	0	0	0
	380C2F1	12774	59002	124352	12774	59002	-124352
	380C2F2	12774	58919	124347	12774	58919	-124347
	380C2F3	12774	58816	124344	12774	58816	-124344
	RTG	0	0	0	3463	15483	-32705

NL3/3	GW / opgw	0	0	0	0	0	0
Wind, -5°C	150C1F1	0	0	0	0	0	0
Permanent loads yg= 0.9	150C1F2	0	0	0	0	0	0
Wind angle: 0°	150C1F3	0	0	0	0	0	0
	380C2F1	15538	65167	133667	15538	65167	-133667
	380C2F2	15538	64885	133541	15538	64885	-133541
	380C2F3	15538	64537	133405	15538	64537	-133405
	RTG	0	0	0	6610	25061	-51190
NL3/4	GW / opgw	0	0	0	0	0	0
Construction/maintenance, +5°C	150C1F1	0	0	0	0	0	0
Permanent loads yg= 0.9	150C1F2	0	0	0	0	0	0
Wind angle: 0°	150C1F3	0	0	0	0	0	0
	380C2F1	15186	59161	124693	15186	59161	-124693
	380C2F2	15186	59082	124695	15186	59082	-124695
	380C2F3	15186	58984	124702	15186	58984	-124702
	RTG	0	0	0	4667	17663	-37380
NL3/1a	GW / opgw	0	0	0	0	0	0
Wind, 10°C	150C1F1	0	0	0	0	0	0
Permanent loads yg= 0.9	150C1F2	0	0	0	0	0	0
Wind angle: 45°	150C1F3	0	0	0	0	0	0
	380C2F1	12781	51686	106203	12785	83209	-143427
	380C2F2	12781	51475	106115	12785	79677	-138605
	380C2F3	12781	51213	106020	12784	75266	-132662
	RTG	0	0	0	3465	20757	-36495
NL3/1b	GW / opgw	0	0	0	0	0	0
Wind, -20°C	150C1F1	0	0	0	0	0	0
Permanent loads yg= 0.9	150C1F2	0	0	0	0	0	0
Wind angle: 45°	150C1F3	0	0	0	0	0	0
	380C2F1	12774	58650	124349	12774	64817	-128235
	380C2F2	12774	58600	124354	12774	64107	-127560
	380C2F3	12774	58537	124361	12774	63242	-126784
	RTG	0	0	0	3463	16742	-33438
NL3/3	GW / opgw	0	0	0	0	0	0
Wind, -5°C	150C1F1	0	0	0	0	0	0
Permanent loads yg= 0.9	150C1F2	0	0	0	0	0	0
Wind angle: 45°	150C1F3	0	0	0	0	0	0
	380C2F1	15538	63989	133240	15542	87296	-157124
	380C2F2	15538	63826	133204	15541	84600	-153707
	380C2F3	15538	63624	133170	15541	81274	-149593
	RTG	0	0	0	6612	33762	-59771
NL3/4	GW / opgw	0	0	0	0	0	0
Construction/maintenance, +5°C	150C1F1	0	0	0	0	0	0
Permanent loads yg= 0.9	150C1F2	0	0	0	0	0	0
Wind angle: 45°	150C1F3	0	0	0	0	0	0
	380C2F1	15186	58824	124722	15187	64412	-127360
	380C2F2	15186	58776	124730	15187	63786	-126864
	380C2F3	15186	58714	124742	15186	63019	-126301
	RTG	0	0	0	4667	18753	-37748
NL3/1a	GW / opgw	0	0	0	0	0	0
Wind, 10°C	150C1F1	0	0	0	0	0	0
Permanent loads yg= 0.9	150C1F2	0	0	0	0	0	0
Wind angle: 90°	150C1F3	0	0	0	0	0	0
	380C2F1	12785	80070	139139	12785	80070	-139139
	380C2F2	12784	76836	134766	12784	76836	-134766
	380C2F3	12784	72810	129403	12784	72810	-129403
	RTG	0	0	0	3465	20054	-35547
NL3/1b	GW / opgw	0	0	0	0	0	0
Wind, -20°C	150C1F1	0	0	0	0	0	0
Permanent loads yg= 0.9	150C1F2	0	0	0	0	0	0
Wind angle: 90°	150C1F3	0	0	0	0	0	0
	380C2F1	12774	64186	127633	12774	64186	-127633
	380C2F2	12774	63547	127051	12774	63547	-127051
	380C2F3	12774	62768	126386	12774	62768	-126386
	RTG	0	0	0	3463	16607	-33320
NL3/3	GW / opgw	0	0	0	0	0	0
Wind, -5°C	150C1F1	0	0	0	0	0	0
Permanent loads yg= 0.9	150C1F2	0	0	0	0	0	0
Wind angle: 90°	150C1F3	0	0	0	0	0	0
	380C2F1	15541	84898	154082	15541	84898	-154082
	380C2F2	15541	82452	151036	15541	82452	-151036
	380C2F3	15541	79441	147388	15541	79441	-147388
	RTG	0	0	0	6612	32826	-58647

NL3/4	GW / opgw	0	0	0	0	0	0
Construction/maintenance, +5°C	150C1F1	0	0	0	0	0	0
Permanent loads yg= 0.9	150C1F2	0	0	0	0	0	0
Wind angle: 90°	150C1F3	0	0	0	0	0	0
	380C2F1	15187	63855	126917	15187	63855	-126917
	380C2F2	15186	63290	126494	15186	63290	-126494
	380C2F3	15186	62598	126016	15186	62598	-126016
	RTG	0	0	0	4667	18640	-37679
NL3/1a	GW / opgw	0	0	0	0	0	0
Wind, 10°C	150C1F1	0	0	0	0	0	0
Permanent loads yg= 0.9	150C1F2	0	0	0	0	0	0
Wind angle: -45°	150C1F3	0	0	0	0	0	0
	380C2F1	12785	83209	143427	12781	51686	-106203
	380C2F2	12785	79677	138605	12781	51475	-106115
	380C2F3	12784	75266	132662	12781	51213	-106020
	RTG	0	0	0	3464	13874	-28690
NL3/1b	GW / opgw	0	0	0	0	0	0
Wind, -20°C	150C1F1	0	0	0	0	0	0
Permanent loads yg= 0.9	150C1F2	0	0	0	0	0	0
Wind angle: -45°	150C1F3	0	0	0	0	0	0
	380C2F1	12774	64817	128235	12774	58650	-124349
	380C2F2	12774	64107	127560	12774	58600	-124354
	380C2F3	12774	63242	126784	12774	58537	-124361
	RTG	0	0	0	3463	15405	-32709
NL3/3	GW / opgw	0	0	0	0	0	0
Wind, -5°C	150C1F1	0	0	0	0	0	0
Permanent loads yg= 0.9	150C1F2	0	0	0	0	0	0
Wind angle: -45°	150C1F3	0	0	0	0	0	0
	380C2F1	15542	87296	157124	15538	63989	-133240
	380C2F2	15541	84600	153707	15538	63826	-133204
	380C2F3	15541	81274	149593	15538	63624	-133170
	RTG	0	0	0	6610	24584	-51049
NL3/4	GW / opgw	0	0	0	0	0	0
Construction/maintenance, +5°C	150C1F1	0	0	0	0	0	0
Permanent loads yg= 0.9	150C1F2	0	0	0	0	0	0
Wind angle: -45°	150C1F3	0	0	0	0	0	0
	380C2F1	15187	64412	127360	15186	58824	-124722
	380C2F2	15187	63786	126864	15186	58776	-124730
	380C2F3	15186	63019	126301	15186	58714	-124742
	RTG	0	0	0	4667	17589	-37393

ZWW4HL400

Loadcases for tower strength (Special limit state)

		Ahead			Back		
Loadcase according to 50341-3-15	Att. Point	Vertical [N]	Transversal [N]	Longitudinal [N]	Vertical [N]	Transversal [N]	Longitudinal [N]
NL3/1a	GW / opgw	0	0	0	0	0	0
Wind, 10°C	150C1F1	0	0	0	0	0	0
Permanent loads yg= 1.2	150C1F2	0	0	0	0	0	0
Wind angle: 0°	150C1F3	0	0	0	0	0	0
	380C2F1	17045	65999	134453	17045	65999	-134453
	380C2F2	17045	65670	134305	17045	65670	-134305
	380C2F3	17045	65264	134145	17045	65264	-134145
	RTG	0	0	0	4620	17777	-36500
NL3/1b	GW / opgw	0	0	0	0	0	0
Wind, -20°C	150C1F1	0	0	0	0	0	0
Permanent loads yg= 1.2	150C1F2	0	0	0	0	0	0
Wind angle: 0°	150C1F3	0	0	0	0	0	0
	380C2F1	17036	72727	153787	17036	72727	-153787
	380C2F2	17036	72650	153792	17036	72650	-153792
	380C2F3	17036	72553	153803	17036	72553	-153803
	RTG	0	0	0	4618	19300	-40891
NL3/3	GW / opgw	0	0	0	0	0	0
Wind, -5°C	150C1F1	0	0	0	0	0	0
Permanent loads yg= 1.2	150C1F2	0	0	0	0	0	0
Wind angle: 0°	150C1F3	0	0	0	0	0	0
	380C2F1	19802	77784	160723	19802	77784	-160723
	380C2F2	19802	77528	160653	19802	77528	-160653
	380C2F3	19802	77210	160582	19802	77210	-160582
	RTG	0	0	0	7767	28176	-57870
NL3/4	GW / opgw	0	0	0	0	0	0
Construction/maintenance, +5°C	150C1F1	0	0	0	0	0	0
Permanent loads yg= 1.2	150C1F2	0	0	0	0	0	0
Wind angle: 0°	150C1F3	0	0	0	0	0	0
	380C2F1	19451	71807	151812	19451	71807	-151812
	380C2F2	19451	71732	151822	19451	71732	-151822
	380C2F3	19451	71637	151837	19451	71637	-151837
	RTG	0	0	0	5823	21078	-44703
NL3/1a	GW / opgw	0	0	0	0	0	0
Wind, 10°C	150C1F1	0	0	0	0	0	0
Permanent loads yg= 1.2	150C1F2	0	0	0	0	0	0
Wind angle: 45°	150C1F3	0	0	0	0	0	0
	380C2F1	17045	64625	133950	17049	91626	-161472
	380C2F2	17045	64435	133908	17049	88526	-157578
	380C2F3	17045	64199	133867	17048	84693	-152874
	RTG	0	0	0	4621	23345	-42043
NL3/1b	GW / opgw	0	0	0	0	0	0
Wind, -20°C	150C1F1	0	0	0	0	0	0
Permanent loads yg= 1.2	150C1F2	0	0	0	0	0	0
Wind angle: 45°	150C1F3	0	0	0	0	0	0
	380C2F1	17036	72396	153827	17036	77777	-156027
	380C2F2	17036	72348	153836	17036	77181	-155594
	380C2F3	17036	72287	153850	17036	76450	-155107
	RTG	0	0	0	4618	20406	-41295
NL3/3	GW / opgw	0	0	0	0	0	0
Wind, -5°C	150C1F1	0	0	0	0	0	0
Permanent loads yg= 1.2	150C1F2	0	0	0	0	0	0
Wind angle: 45°	150C1F3	0	0	0	0	0	0
	380C2F1	19802	76705	160510	19806	97020	-177971
	380C2F2	19802	76554	160499	19805	94667	-175291
	380C2F3	19802	76365	160493	19805	91779	-172118
	RTG	0	0	0	7768	36134	-64856
NL3/4	GW / opgw	0	0	0	0	0	0
Construction/maintenance, +5°C	150C1F1	0	0	0	0	0	0
Permanent loads yg= 1.2	150C1F2	0	0	0	0	0	0
Wind angle: 45°	150C1F3	0	0	0	0	0	0
	380C2F1	19451	71483	151869	19451	76541	-153370
	380C2F2	19451	71436	151881	19451	75993	-153041
	380C2F3	19451	71377	151896	19451	75318	-152674
	RTG	0	0	0	5823	22087	-44897
NL3/1a	GW / opgw	0	0	0	0	0	0
Wind, 10°C	150C1F1	0	0	0	0	0	0
Permanent loads yg= 1.2	150C1F2	0	0	0	0	0	0
Wind angle: 90°	150C1F3	0	0	0	0	0	0
	380C2F1	17049	88869	158005	17049	88869	-158005
	380C2F2	17048	86053	154526	17048	86053	-154526
	380C2F3	17048	82578	150345	17048	82578	-150345
	RTG	0	0	0	4621	22737	-41301

NL3/1b	GW / opgw	0	0	0	0	0	0
Wind, -20°C	150C1F1	0	0	0	0	0	0
Permanent loads yg= 1.2	150C1F2	0	0	0	0	0	0
Wind angle: 90°	150C1F3	0	0	0	0	0	0
	380C2F1	17036	77247	155640	17036	77247	-155640
	380C2F2	17036	76709	155273	17036	76709	-155273
	380C2F3	17036	76048	154861	17036	76048	-154861
	RTG	0	0	0	4618	20291	-41221
NL3/3	GW / opgw	0	0	0	0	0	0
Wind, -5°C	150C1F1	0	0	0	0	0	0
Permanent loads yg= 1.2	150C1F2	0	0	0	0	0	0
Wind angle: 90°	150C1F3	0	0	0	0	0	0
	380C2F1	19805	94927	175583	19805	94927	-175583
	380C2F2	19805	92801	173223	19805	92801	-173223
	380C2F3	19804	90194	170443	19804	90194	-170443
	RTG	0	0	0	7768	35276	-63898
NL3/4	GW / opgw	0	0	0	0	0	0
Construction/maintenance, +5°C	150C1F1	0	0	0	0	0	0
Permanent loads yg= 1.2	150C1F2	0	0	0	0	0	0
Wind angle: 90°	150C1F3	0	0	0	0	0	0
	380C2F1	19451	76053	153076	19451	76053	-153076
	380C2F2	19451	75557	152799	19451	75557	-152799
	380C2F3	19451	74945	152493	19451	74945	-152493
	RTG	0	0	0	5823	21985	-44852
NL3/1a	GW / opgw	0	0	0	0	0	0
Wind, 10°C	150C1F1	0	0	0	0	0	0
Permanent loads yg= 1.2	150C1F2	0	0	0	0	0	0
Wind angle: -45°	150C1F3	0	0	0	0	0	0
	380C2F1	17049	91626	161472	17045	64625	-133950
	380C2F2	17049	88526	157578	17045	64435	-133908
	380C2F3	17048	84693	152874	17045	64199	-133867
	RTG	0	0	0	4620	17475	-36413
NL3/1b	GW / opgw	0	0	0	0	0	0
Wind, -20°C	150C1F1	0	0	0	0	0	0
Permanent loads yg= 1.2	150C1F2	0	0	0	0	0	0
Wind angle: -45°	150C1F3	0	0	0	0	0	0
	380C2F1	17036	77777	156027	17036	72396	-153827
	380C2F2	17036	77181	155594	17036	72348	-153836
	380C2F3	17036	76450	155107	17036	72287	-153850
	RTG	0	0	0	4618	19226	-40903
NL3/3	GW / opgw	0	0	0	0	0	0
Wind, -5°C	150C1F1	0	0	0	0	0	0
Permanent loads yg= 1.2	150C1F2	0	0	0	0	0	0
Wind angle: -45°	150C1F3	0	0	0	0	0	0
	380C2F1	19806	97020	177971	19802	76705	-160510
	380C2F2	19805	94667	175291	19802	76554	-160499
	380C2F3	19805	91779	172118	19802	76365	-160493
	RTG	0	0	0	7767	27725	-57784
NL3/4	GW / opgw	0	0	0	0	0	0
Construction/maintenance, +5°C	150C1F1	0	0	0	0	0	0
Permanent loads yg= 1.2	150C1F2	0	0	0	0	0	0
Wind angle: -45°	150C1F3	0	0	0	0	0	0
	380C2F1	19451	76541	153370	19451	71483	-151869
	380C2F2	19451	75993	153041	19451	71436	-151881
	380C2F3	19451	75318	152674	19451	71377	-151896
	RTG	0	0	0	5823	21006	-44720
NL3/1a	GW / opgw	0	0	0	0	0	0
Wind, 10°C	150C1F1	0	0	0	0	0	0
Permanent loads yg= 0.9	150C1F2	0	0	0	0	0	0
Wind angle: 0°	150C1F3	0	0	0	0	0	0
	380C2F1	12781	53245	107104	12781	53245	-107104
	380C2F2	12781	52868	106853	12781	52868	-106853
	380C2F3	12781	52405	106571	12781	52405	-106571
	RTG	0	0	0	3464	14212	-28857
NL3/1b	GW / opgw	0	0	0	0	0	0
Wind, -20°C	150C1F1	0	0	0	0	0	0
Permanent loads yg= 0.9	150C1F2	0	0	0	0	0	0
Wind angle: 0°	150C1F3	0	0	0	0	0	0
	380C2F1	12774	59002	124352	12774	59002	-124352
	380C2F2	12774	58919	124347	12774	58919	-124347
	380C2F3	12774	58816	124344	12774	58816	-124344
	RTG	0	0	0	3463	15483	-32705

NL3/3	GW / opgw	0	0	0	0	0	0
Wind, -5°C	150C1F1	0	0	0	0	0	0
Permanent loads yg= 0.9	150C1F2	0	0	0	0	0	0
Wind angle: 0°	150C1F3	0	0	0	0	0	0
	380C2F1	15538	65167	133667	15538	65167	-133667
	380C2F2	15538	64885	133541	15538	64885	-133541
	380C2F3	15538	64537	133405	15538	64537	-133405
	RTG	0	0	0	6610	25061	-51190
NL3/4	GW / opgw	0	0	0	0	0	0
Construction/maintenance, +5°C	150C1F1	0	0	0	0	0	0
Permanent loads yg= 0.9	150C1F2	0	0	0	0	0	0
Wind angle: 0°	150C1F3	0	0	0	0	0	0
	380C2F1	15186	59161	124693	15186	59161	-124693
	380C2F2	15186	59082	124695	15186	59082	-124695
	380C2F3	15186	58984	124702	15186	58984	-124702
	RTG	0	0	0	4667	17663	-37380
NL3/1a	GW / opgw	0	0	0	0	0	0
Wind, 10°C	150C1F1	0	0	0	0	0	0
Permanent loads yg= 0.9	150C1F2	0	0	0	0	0	0
Wind angle: 45°	150C1F3	0	0	0	0	0	0
	380C2F1	12781	51686	106203	12785	83209	-143427
	380C2F2	12781	51475	106115	12785	79677	-138605
	380C2F3	12781	51213	106020	12784	75266	-132662
	RTG	0	0	0	3465	20757	-36495
NL3/1b	GW / opgw	0	0	0	0	0	0
Wind, -20°C	150C1F1	0	0	0	0	0	0
Permanent loads yg= 0.9	150C1F2	0	0	0	0	0	0
Wind angle: 45°	150C1F3	0	0	0	0	0	0
	380C2F1	12774	58650	124349	12774	64817	-128235
	380C2F2	12774	58600	124354	12774	64107	-127560
	380C2F3	12774	58537	124361	12774	63242	-126784
	RTG	0	0	0	3463	16742	-33438
NL3/3	GW / opgw	0	0	0	0	0	0
Wind, -5°C	150C1F1	0	0	0	0	0	0
Permanent loads yg= 0.9	150C1F2	0	0	0	0	0	0
Wind angle: 45°	150C1F3	0	0	0	0	0	0
	380C2F1	15538	63989	133240	15542	87296	-157124
	380C2F2	15538	63826	133204	15541	84600	-153707
	380C2F3	15538	63624	133170	15541	81274	-149593
	RTG	0	0	0	6612	33762	-59771
NL3/4	GW / opgw	0	0	0	0	0	0
Construction/maintenance, +5°C	150C1F1	0	0	0	0	0	0
Permanent loads yg= 0.9	150C1F2	0	0	0	0	0	0
Wind angle: 45°	150C1F3	0	0	0	0	0	0
	380C2F1	15186	58824	124722	15187	64412	-127360
	380C2F2	15186	58776	124730	15187	63786	-126864
	380C2F3	15186	58714	124742	15186	63019	-126301
	RTG	0	0	0	4667	18753	-37748
NL3/1a	GW / opgw	0	0	0	0	0	0
Wind, 10°C	150C1F1	0	0	0	0	0	0
Permanent loads yg= 0.9	150C1F2	0	0	0	0	0	0
Wind angle: 90°	150C1F3	0	0	0	0	0	0
	380C2F1	12785	80070	139139	12785	80070	-139139
	380C2F2	12784	76836	134766	12784	76836	-134766
	380C2F3	12784	72810	129403	12784	72810	-129403
	RTG	0	0	0	3465	20054	-35547
NL3/1b	GW / opgw	0	0	0	0	0	0
Wind, -20°C	150C1F1	0	0	0	0	0	0
Permanent loads yg= 0.9	150C1F2	0	0	0	0	0	0
Wind angle: 90°	150C1F3	0	0	0	0	0	0
	380C2F1	12774	64186	127633	12774	64186	-127633
	380C2F2	12774	63547	127051	12774	63547	-127051
	380C2F3	12774	62768	126386	12774	62768	-126386
	RTG	0	0	0	3463	16607	-33320
NL3/3	GW / opgw	0	0	0	0	0	0
Wind, -5°C	150C1F1	0	0	0	0	0	0
Permanent loads yg= 0.9	150C1F2	0	0	0	0	0	0
Wind angle: 90°	150C1F3	0	0	0	0	0	0
	380C2F1	15541	84898	154082	15541	84898	-154082
	380C2F2	15541	82452	151036	15541	82452	-151036
	380C2F3	15541	79441	147388	15541	79441	-147388
	RTG	0	0	0	6612	32826	-58647

NL3/4	GW / opgw	0	0	0	0	0	0
Construction/maintenance, +5°C	150C1F1	0	0	0	0	0	0
Permanent loads yg= 0.9	150C1F2	0	0	0	0	0	0
Wind angle: 90°	150C1F3	0	0	0	0	0	0
	380C2F1	15187	63855	126917	15187	63855	-126917
	380C2F2	15186	63290	126494	15186	63290	-126494
	380C2F3	15186	62598	126016	15186	62598	-126016
	RTG	0	0	0	4667	18640	-37679
NL3/1a	GW / opgw	0	0	0	0	0	0
Wind, 10°C	150C1F1	0	0	0	0	0	0
Permanent loads yg= 0.9	150C1F2	0	0	0	0	0	0
Wind angle: -45°	150C1F3	0	0	0	0	0	0
	380C2F1	12785	83209	143427	12781	51686	-106203
	380C2F2	12785	79677	138605	12781	51475	-106115
	380C2F3	12784	75266	132662	12781	51213	-106020
	RTG	0	0	0	3464	13874	-28690
NL3/1b	GW / opgw	0	0	0	0	0	0
Wind, -20°C	150C1F1	0	0	0	0	0	0
Permanent loads yg= 0.9	150C1F2	0	0	0	0	0	0
Wind angle: -45°	150C1F3	0	0	0	0	0	0
	380C2F1	12774	64817	128235	12774	58650	-124349
	380C2F2	12774	64107	127560	12774	58600	-124354
	380C2F3	12774	63242	126784	12774	58537	-124361
	RTG	0	0	0	3463	15405	-32709
NL3/3	GW / opgw	0	0	0	0	0	0
Wind, -5°C	150C1F1	0	0	0	0	0	0
Permanent loads yg= 0.9	150C1F2	0	0	0	0	0	0
Wind angle: -45°	150C1F3	0	0	0	0	0	0
	380C2F1	15542	87296	157124	15538	63989	-133240
	380C2F2	15541	84600	153707	15538	63826	-133204
	380C2F3	15541	81274	149593	15538	63624	-133170
	RTG	0	0	0	6610	24584	-51049
NL3/4	GW / opgw	0	0	0	0	0	0
Construction/maintenance, +5°C	150C1F1	0	0	0	0	0	0
Permanent loads yg= 0.9	150C1F2	0	0	0	0	0	0
Wind angle: -45°	150C1F3	0	0	0	0	0	0
	380C2F1	15187	64412	127360	15186	58824	-124722
	380C2F2	15187	63786	126864	15186	58776	-124730
	380C2F3	15186	63019	126301	15186	58714	-124742
	RTG	0	0	0	4667	17589	-37393

ZWW4HL400

Loadcases for tower strength (Special limit state)

		Ahead			Back		
Loadcase according to 50341-3-15	Att. Point	Vertical [N]	Transversal [N]	Longitudinal [N]	Vertical [N]	Transversal [N]	Longitudinal [N]
NL3/1a	GW / opgw	2313	9177	18418	0	0	0
Wind, 10°C	150C1F1	8523	32999	67226	0	0	0
Permanent loads yg= 1.2	150C1F2	8523	32835	67152	0	0	0
Wind angle: 0°	150C1F3	8522	32632	67072	0	0	0
	380C2F1	0	0	0	17045	65999	-134453
	380C2F2	0	0	0	17045	65670	-134305
	380C2F3	0	0	0	17045	65264	-134145
	RTG	0	0	0	4620	17777	-36500
NL3/1b	GW / opgw	2312	9804	20637	0	0	0
Wind, -20°C	150C1F1	8518	36364	76893	0	0	0
Permanent loads yg= 1.2	150C1F2	8518	36325	76896	0	0	0
Wind angle: 0°	150C1F3	8518	36277	76901	0	0	0
	380C2F1	0	0	0	17036	72727	-153787
	380C2F2	0	0	0	17036	72650	-153792
	380C2F3	0	0	0	17036	72553	-153803
	RTG	0	0	0	4618	19300	-40891
NL3/3	GW / opgw	3883	14529	29165	0	0	0
Wind, -5°C	150C1F1	9901	38892	80361	0	0	0
Permanent loads yg= 1.2	150C1F2	9901	38764	80327	0	0	0
Wind angle: 0°	150C1F3	9901	38605	80291	0	0	0
	380C2F1	0	0	0	19802	77784	-160723
	380C2F2	0	0	0	19802	77528	-160653
	380C2F3	0	0	0	19802	77210	-160582
	RTG	0	0	0	7767	28176	-57870
NL3/4	GW / opgw	2915	10616	22378	0	0	0
Construction/maintenance, +5°C	150C1F1	9725	35903	75906	0	0	0
Permanent loads yg= 1.2	150C1F2	9725	35866	75911	0	0	0
Wind angle: 0°	150C1F3	9725	35819	75919	0	0	0
	380C2F1	0	0	0	19451	71807	-151812
	380C2F2	0	0	0	19451	71732	-151822
	380C2F3	0	0	0	19451	71637	-151837
	RTG	0	0	0	5823	21078	-44703
NL3/1a	GW / opgw	2313	8906	18274	0	0	0
Wind, 10°C	150C1F1	8522	32312	66975	0	0	0
Permanent loads yg= 1.2	150C1F2	8522	32218	66954	0	0	0
Wind angle: 45°	150C1F3	8522	32100	66934	0	0	0
	380C2F1	0	0	0	17049	91626	-161472
	380C2F2	0	0	0	17049	88526	-157578
	380C2F3	0	0	0	17048	84693	-152874
	RTG	0	0	0	4621	23345	-42043
NL3/1b	GW / opgw	2312	9742	20639	0	0	0
Wind, -20°C	150C1F1	8518	36198	76913	0	0	0
Permanent loads yg= 1.2	150C1F2	8518	36174	76918	0	0	0
Wind angle: 45°	150C1F3	8518	36144	76925	0	0	0
	380C2F1	0	0	0	17036	77777	-156027
	380C2F2	0	0	0	17036	77181	-155594
	380C2F3	0	0	0	17036	76450	-155107
	RTG	0	0	0	4618	20406	-41295
NL3/3	GW / opgw	3883	14130	28996	0	0	0
Wind, -5°C	150C1F1	9901	38353	80255	0	0	0
Permanent loads yg= 1.2	150C1F2	9901	38277	80249	0	0	0
Wind angle: 45°	150C1F3	9901	38182	80246	0	0	0
	380C2F1	0	0	0	19806	97020	-177971
	380C2F2	0	0	0	19805	94667	-175291
	380C2F3	0	0	0	19805	91779	-172118
	RTG	0	0	0	7768	36134	-64856
NL3/4	GW / opgw	2915	10557	22386	0	0	0
Construction/maintenance, +5°C	150C1F1	9725	35742	75935	0	0	0
Permanent loads yg= 1.2	150C1F2	9725	35718	75940	0	0	0
Wind angle: 45°	150C1F3	9725	35688	75948	0	0	0
	380C2F1	0	0	0	19451	76541	-153370
	380C2F2	0	0	0	19451	75993	-153041
	380C2F3	0	0	0	19451	75318	-152674
	RTG	0	0	0	5823	22087	-44897
NL3/1a	GW / opgw	2314	13771	23728	0	0	0
Wind, 10°C	150C1F1	8524	44435	79003	0	0	0
Permanent loads yg= 1.2	150C1F2	8524	43026	77263	0	0	0
Wind angle: 90°	150C1F3	8524	41289	75172	0	0	0
	380C2F1	0	0	0	17049	88869	-158005
	380C2F2	0	0	0	17048	86053	-154526
	380C2F3	0	0	0	17048	82578	-150345
	RTG	0	0	0	4621	22737	-41301

NL3/1b	GW / opgw	2312	10699	21159	0	0	0
Wind, -20°C	150C1F1	8518	38623	77820	0	0	0
Permanent loads yg= 1.2	150C1F2	8518	38354	77637	0	0	0
Wind angle: 90°	150C1F3	8518	38024	77431	0	0	0
	380C2F1	0	0	0	17036	77247	-155640
	380C2F2	0	0	0	17036	76709	-155273
	380C2F3	0	0	0	17036	76048	-154861
	RTG	0	0	0	4618	20291	-41221
NL3/3	GW / opgw	3885	21080	36034	0	0	0
Wind, -5°C	150C1F1	9903	47463	87791	0	0	0
Permanent loads yg= 1.2	150C1F2	9902	46400	86612	0	0	0
Wind angle: 90°	150C1F3	9902	45097	85222	0	0	0
	380C2F1	0	0	0	19805	94927	-175583
	380C2F2	0	0	0	19805	92801	-173223
	380C2F3	0	0	0	19804	90194	-170443
	RTG	0	0	0	7768	35276	-63898
NL3/4	GW / opgw	2915	11412	22688	0	0	0
Construction/maintenance, +5°C	150C1F1	9726	38027	76538	0	0	0
Permanent loads yg= 1.2	150C1F2	9726	37779	76399	0	0	0
Wind angle: 90°	150C1F3	9725	37473	76246	0	0	0
	380C2F1	0	0	0	19451	76053	-153076
	380C2F2	0	0	0	19451	75557	-152799
	380C2F3	0	0	0	19451	74945	-152493
	RTG	0	0	0	5823	21985	-44852
NL3/1a	GW / opgw	2314	14308	24444	0	0	0
Wind, 10°C	150C1F1	8525	45813	80736	0	0	0
Permanent loads yg= 1.2	150C1F2	8524	44263	78789	0	0	0
Wind angle: -45°	150C1F3	8524	42347	76437	0	0	0
	380C2F1	0	0	0	17045	64625	-133950
	380C2F2	0	0	0	17045	64435	-133908
	380C2F3	0	0	0	17045	64199	-133867
	RTG	0	0	0	4620	17475	-36413
NL3/1b	GW / opgw	2312	10807	21256	0	0	0
Wind, -20°C	150C1F1	8518	38889	78013	0	0	0
Permanent loads yg= 1.2	150C1F2	8518	38591	77797	0	0	0
Wind angle: -45°	150C1F3	8518	38225	77553	0	0	0
	380C2F1	0	0	0	17036	72396	-153827
	380C2F2	0	0	0	17036	72348	-153836
	380C2F3	0	0	0	17036	72287	-153850
	RTG	0	0	0	4618	19226	-40903
NL3/3	GW / opgw	3885	21841	36979	0	0	0
Wind, -5°C	150C1F1	9903	48510	88986	0	0	0
Permanent loads yg= 1.2	150C1F2	9903	47334	87645	0	0	0
Wind angle: -45°	150C1F3	9902	45889	86059	0	0	0
	380C2F1	0	0	0	19802	76705	-160510
	380C2F2	0	0	0	19802	76554	-160499
	380C2F3	0	0	0	19802	76365	-160493
	RTG	0	0	0	7767	27725	-57784
NL3/4	GW / opgw	2915	11505	22754	0	0	0
Construction/maintenance, +5°C	150C1F1	9726	38271	76685	0	0	0
Permanent loads yg= 1.2	150C1F2	9726	37996	76520	0	0	0
Wind angle: -45°	150C1F3	9725	37659	76337	0	0	0
	380C2F1	0	0	0	19451	71483	-151869
	380C2F2	0	0	0	19451	71436	-151881
	380C2F3	0	0	0	19451	71377	-151896
	RTG	0	0	0	5823	21006	-44720
NL3/1a	GW / opgw	1735	7440	14693	0	0	0
Wind, 10°C	150C1F1	6391	26623	53552	0	0	0
Permanent loads yg= 0.9	150C1F2	6391	26434	53426	0	0	0
Wind angle: 0°	150C1F3	6390	26203	53285	0	0	0
	380C2F1	0	0	0	12781	53245	-107104
	380C2F2	0	0	0	12781	52868	-106853
	380C2F3	0	0	0	12781	52405	-106571
	RTG	0	0	0	3464	14212	-28857
NL3/1b	GW / opgw	1734	7898	16549	0	0	0
Wind, -20°C	150C1F1	6387	29501	62176	0	0	0
Permanent loads yg= 0.9	150C1F2	6387	29460	62173	0	0	0
Wind angle: 0°	150C1F3	6387	29408	62172	0	0	0
	380C2F1	0	0	0	12774	59002	-124352
	380C2F2	0	0	0	12774	58919	-124347
	380C2F3	0	0	0	12774	58816	-124344
	RTG	0	0	0	3463	15483	-32705

NL3/3	GW / opgw	3304	13004	25894	0	0	0
Wind, -5°C	150C1F1	7769	32583	66833	0	0	0
Permanent loads yg= 0.9	150C1F2	7769	32443	66770	0	0	0
Wind angle: 0°	150C1F3	7769	32268	66702	0	0	0
	380C2F1	0	0	0	15538	65167	-133667
	380C2F2	0	0	0	15538	64885	-133541
	380C2F3	0	0	0	15538	64537	-133405
	RTG	0	0	0	6610	25061	-51190
NL3/4	GW / opgw	2336	8913	18725	0	0	0
Construction/maintenance, +5°C	150C1F1	7593	29581	62346	0	0	0
Permanent loads yg= 0.9	150C1F2	7593	29541	62348	0	0	0
Wind angle: 0°	150C1F3	7593	29492	62351	0	0	0
	380C2F1	0	0	0	15186	59161	-124693
	380C2F2	0	0	0	15186	59082	-124695
	380C2F3	0	0	0	15186	58984	-124702
	RTG	0	0	0	4667	17663	-37380
NL3/1a	GW / opgw	1735	7127	14457	0	0	0
Wind, 10°C	150C1F1	6390	25843	53102	0	0	0
Permanent loads yg= 0.9	150C1F2	6390	25737	53057	0	0	0
Wind angle: 45°	150C1F3	6390	25607	53010	0	0	0
	380C2F1	0	0	0	12785	83209	-143427
	380C2F2	0	0	0	12785	79677	-138605
	380C2F3	0	0	0	12784	75266	-132662
	RTG	0	0	0	3465	20757	-36495
NL3/1b	GW / opgw	1734	7831	16541	0	0	0
Wind, -20°C	150C1F1	6387	29325	62175	0	0	0
Permanent loads yg= 0.9	150C1F2	6387	29300	62177	0	0	0
Wind angle: 45°	150C1F3	6387	29268	62181	0	0	0
	380C2F1	0	0	0	12774	64817	-128235
	380C2F2	0	0	0	12774	64107	-127560
	380C2F3	0	0	0	12774	63242	-126784
	RTG	0	0	0	3463	16742	-33438
NL3/3	GW / opgw	3304	12574	25660	0	0	0
Wind, -5°C	150C1F1	7769	31994	66620	0	0	0
Permanent loads yg= 0.9	150C1F2	7769	31913	66602	0	0	0
Wind angle: 45°	150C1F3	7769	31812	66585	0	0	0
	380C2F1	0	0	0	15542	87296	-157124
	380C2F2	0	0	0	15541	84600	-153707
	380C2F3	0	0	0	15541	81274	-149593
	RTG	0	0	0	6612	33762	-59771
NL3/4	GW / opgw	2336	8851	18727	0	0	0
Construction/maintenance, +5°C	150C1F1	7593	29412	62361	0	0	0
Permanent loads yg= 0.9	150C1F2	7593	29388	62365	0	0	0
Wind angle: 45°	150C1F3	7593	29357	62371	0	0	0
	380C2F1	0	0	0	15187	64412	-127360
	380C2F2	0	0	0	15187	63786	-126864
	380C2F3	0	0	0	15186	63019	-126301
	RTG	0	0	0	4667	18753	-37748
NL3/1a	GW / opgw	1735	12751	21541	0	0	0
Wind, 10°C	150C1F1	6392	40035	69569	0	0	0
Permanent loads yg= 0.9	150C1F2	6392	38418	67383	0	0	0
Wind angle: 90°	150C1F3	6392	36405	64701	0	0	0
	380C2F1	0	0	0	12785	80070	-139139
	380C2F2	0	0	0	12784	76836	-134766
	380C2F3	0	0	0	12784	72810	-129403
	RTG	0	0	0	3465	20054	-35547
NL3/1b	GW / opgw	1734	8943	17393	0	0	0
Wind, -20°C	150C1F1	6387	32093	63816	0	0	0
Permanent loads yg= 0.9	150C1F2	6387	31774	63526	0	0	0
Wind angle: 90°	150C1F3	6387	31384	63193	0	0	0
	380C2F1	0	0	0	12774	64186	-127633
	380C2F2	0	0	0	12774	63547	-127051
	380C2F3	0	0	0	12774	62768	-126386
	RTG	0	0	0	3463	16607	-33320
NL3/3	GW / opgw	3306	20126	33990	0	0	0
Wind, -5°C	150C1F1	7771	42449	77041	0	0	0
Permanent loads yg= 0.9	150C1F2	7771	41226	75518	0	0	0
Wind angle: 90°	150C1F3	7770	39721	73694	0	0	0
	380C2F1	0	0	0	15541	84898	-154082
	380C2F2	0	0	0	15541	82452	-151036
	380C2F3	0	0	0	15541	79441	-147388
	RTG	0	0	0	6612	32826	-58647

NL3/4	GW / opgw	2336	9790	19209	0	0	0
Construction/maintenance, +5°C	150C1F1	7593	31927	63459	0	0	0
Permanent loads yg= 0.9	150C1F2	7593	31645	63247	0	0	0
Wind angle: 90°	150C1F3	7593	31299	63008	0	0	0
	380C2F1	0	0	0	15187	63855	-126917
	380C2F2	0	0	0	15186	63290	-126494
	380C2F3	0	0	0	15186	62598	-126016
	RTG	0	0	0	4667	18640	-37679
NL3/1a	GW / opgw	1735	13344	22377	0	0	0
Wind, 10°C	150C1F1	6393	41605	71713	0	0	0
Permanent loads yg= 0.9	150C1F2	6392	39839	69303	0	0	0
Wind angle: -45°	150C1F3	6392	37633	66331	0	0	0
	380C2F1	0	0	0	12781	51686	-106203
	380C2F2	0	0	0	12781	51475	-106115
	380C2F3	0	0	0	12781	51213	-106020
	RTG	0	0	0	3464	13874	-28690
NL3/1b	GW / opgw	1734	9072	17537	0	0	0
Wind, -20°C	150C1F1	6387	32408	64118	0	0	0
Permanent loads yg= 0.9	150C1F2	6387	32054	63780	0	0	0
Wind angle: -45°	150C1F3	6387	31621	63392	0	0	0
	380C2F1	0	0	0	12774	58650	-124349
	380C2F2	0	0	0	12774	58600	-124354
	380C2F3	0	0	0	12774	58537	-124361
	RTG	0	0	0	3463	15405	-32709
NL3/3	GW / opgw	3306	20937	35040	0	0	0
Wind, -5°C	150C1F1	7771	43648	78562	0	0	0
Permanent loads yg= 0.9	150C1F2	7771	42300	76853	0	0	0
Wind angle: -45°	150C1F3	7770	40637	74797	0	0	0
	380C2F1	0	0	0	15538	63989	-133240
	380C2F2	0	0	0	15538	63826	-133204
	380C2F3	0	0	0	15538	63624	-133170
	RTG	0	0	0	6610	24584	-51049
NL3/4	GW / opgw	2336	9895	19301	0	0	0
Construction/maintenance, +5°C	150C1F1	7593	32206	63680	0	0	0
Permanent loads yg= 0.9	150C1F2	7593	31893	63432	0	0	0
Wind angle: -45°	150C1F3	7593	31509	63151	0	0	0
	380C2F1	0	0	0	15186	58824	-124722
	380C2F2	0	0	0	15186	58776	-124730
	380C2F3	0	0	0	15186	58714	-124742
	RTG	0	0	0	4667	17589	-37393

ZWW4HL400

Loadcases for tower strength (Special limit state)

		Ahead			Back		
Loadcase according to 50341-3-15	Att. Point	Vertical [N]	Transversal [N]	Longitudinal [N]	Vertical [N]	Transversal [N]	Longitudinal [N]
NL3/1a	GW / opgw	0	0	0	2313	9177	-18418
Wind, 10°C	150C1F1	0	0	0	8523	32999	-67226
Permanent loads yg= 1.2	150C1F2	0	0	0	8523	32835	-67152
Wind angle: 0°	150C1F3	0	0	0	8522	32632	-67072
	380C2F1	17045	65999	134453	17045	65999	-134453
	380C2F2	17045	65670	134305	17045	65670	-134305
	380C2F3	17045	65264	134145	17045	65264	-134145
	RTG	4620	17777	36500	4620	17777	-36500
NL3/1b	GW / opgw	0	0	0	2312	9804	-20637
Wind, -20°C	150C1F1	0	0	0	8518	36364	-76893
Permanent loads yg= 1.2	150C1F2	0	0	0	8518	36325	-76896
Wind angle: 0°	150C1F3	0	0	0	8518	36277	-76901
	380C2F1	17036	72727	153787	17036	72727	-153787
	380C2F2	17036	72650	153792	17036	72650	-153792
	380C2F3	17036	72553	153803	17036	72553	-153803
	RTG	4618	19300	40891	4618	19300	-40891
NL3/3	GW / opgw	0	0	0	3883	14529	-29165
Wind, -5°C	150C1F1	0	0	0	9901	38892	-80361
Permanent loads yg= 1.2	150C1F2	0	0	0	9901	38764	-80327
Wind angle: 0°	150C1F3	0	0	0	9901	38605	-80291
	380C2F1	19802	77784	160723	19802	77784	-160723
	380C2F2	19802	77528	160653	19802	77528	-160653
	380C2F3	19802	77210	160582	19802	77210	-160582
	RTG	7767	28176	57870	7767	28176	-57870
NL3/4	GW / opgw	0	0	0	2915	10616	-22378
Construction/maintenance, +5°C	150C1F1	0	0	0	9725	35903	-75906
Permanent loads yg= 1.2	150C1F2	0	0	0	9725	35866	-75911
Wind angle: 0°	150C1F3	0	0	0	9725	35819	-75919
	380C2F1	19451	71807	151812	19451	71807	-151812
	380C2F2	19451	71732	151822	19451	71732	-151822
	380C2F3	19451	71637	151837	19451	71637	-151837
	RTG	5823	21078	44703	5823	21078	-44703
NL3/1a	GW / opgw	0	0	0	2314	14308	-24444
Wind, 10°C	150C1F1	0	0	0	8525	45813	-80736
Permanent loads yg= 1.2	150C1F2	0	0	0	8524	44263	-78789
Wind angle: 45°	150C1F3	0	0	0	8524	42347	-76437
	380C2F1	17045	64625	133950	17049	91626	-161472
	380C2F2	17045	64435	133908	17049	88526	-157578
	380C2F3	17045	64199	133867	17048	84693	-152874
	RTG	4620	17475	36413	4621	23345	-42043
NL3/1b	GW / opgw	0	0	0	2312	10807	-21256
Wind, -20°C	150C1F1	0	0	0	8518	38889	-78013
Permanent loads yg= 1.2	150C1F2	0	0	0	8518	38591	-77797
Wind angle: 45°	150C1F3	0	0	0	8518	38225	-77553
	380C2F1	17036	72396	153827	17036	77777	-156027
	380C2F2	17036	72348	153836	17036	77181	-155594
	380C2F3	17036	72287	153850	17036	76450	-155107
	RTG	4618	19226	40903	4618	20406	-41295
NL3/3	GW / opgw	0	0	0	3885	21841	-36979
Wind, -5°C	150C1F1	0	0	0	9903	48510	-88986
Permanent loads yg= 1.2	150C1F2	0	0	0	9903	47334	-87645
Wind angle: 45°	150C1F3	0	0	0	9902	45889	-86059
	380C2F1	19802	76705	160510	19806	97020	-177971
	380C2F2	19802	76554	160499	19805	94667	-175291
	380C2F3	19802	76365	160493	19805	91779	-172118
	RTG	7767	27725	57784	7768	36134	-64856
NL3/4	GW / opgw	0	0	0	2915	11505	-22754
Construction/maintenance, +5°C	150C1F1	0	0	0	9726	38271	-76685
Permanent loads yg= 1.2	150C1F2	0	0	0	9726	37996	-76520
Wind angle: 45°	150C1F3	0	0	0	9725	37659	-76337
	380C2F1	19451	71483	151869	19451	76541	-153370
	380C2F2	19451	71436	151881	19451	75993	-153041
	380C2F3	19451	71377	151896	19451	75318	-152674
	RTG	5823	21006	44720	5823	22087	-44897
NL3/1a	GW / opgw	0	0	0	2314	13771	-23728
Wind, 10°C	150C1F1	0	0	0	8524	44435	-79003
Permanent loads yg= 1.2	150C1F2	0	0	0	8524	43026	-77263
Wind angle: 90°	150C1F3	0	0	0	8524	41289	-75172
	380C2F1	17049	88869	158005	17049	88869	-158005
	380C2F2	17048	86053	154526	17048	86053	-154526
	380C2F3	17048	82578	150345	17048	82578	-150345
	RTG	4621	22737	41301	4621	22737	-41301

NL3/1b	GW / opgw	0	0	0	2312	10699	-21159
Wind, -20°C	150C1F1	0	0	0	8518	38623	-77820
Permanent loads yg= 1.2	150C1F2	0	0	0	8518	38354	-77637
Wind angle: 90°	150C1F3	0	0	0	8518	38024	-77431
	380C2F1	17036	77247	155640	17036	77247	-155640
	380C2F2	17036	76709	155273	17036	76709	-155273
	380C2F3	17036	76048	154861	17036	76048	-154861
	RTG	4618	20291	41221	4618	20291	-41221
NL3/3	GW / opgw	0	0	0	3885	21080	-36034
Wind, -5°C	150C1F1	0	0	0	9903	47463	-87791
Permanent loads yg= 1.2	150C1F2	0	0	0	9902	46400	-86612
Wind angle: 90°	150C1F3	0	0	0	9902	45097	-85222
	380C2F1	19805	94927	175583	19805	94927	-175583
	380C2F2	19805	92801	173223	19805	92801	-173223
	380C2F3	19804	90194	170443	19804	90194	-170443
	RTG	7768	35276	63898	7768	35276	-63898
NL3/4	GW / opgw	0	0	0	2915	11412	-22688
Construction/maintenance, +5°C	150C1F1	0	0	0	9726	38027	-76538
Permanent loads yg= 1.2	150C1F2	0	0	0	9726	37779	-76399
Wind angle: 90°	150C1F3	0	0	0	9725	37473	-76246
	380C2F1	19451	76053	153076	19451	76053	-153076
	380C2F2	19451	75557	152799	19451	75557	-152799
	380C2F3	19451	74945	152493	19451	74945	-152493
	RTG	5823	21985	44852	5823	21985	-44852
NL3/1a	GW / opgw	0	0	0	2313	8906	-18274
Wind, 10°C	150C1F1	0	0	0	8522	32312	-66975
Permanent loads yg= 1.2	150C1F2	0	0	0	8522	32218	-66954
Wind angle: -45°	150C1F3	0	0	0	8522	32100	-66934
	380C2F1	17049	91626	161472	17045	64625	-133950
	380C2F2	17049	88526	157578	17045	64435	-133908
	380C2F3	17048	84693	152874	17045	64199	-133867
	RTG	4621	23345	42043	4620	17475	-36413
NL3/1b	GW / opgw	0	0	0	2312	9742	-20639
Wind, -20°C	150C1F1	0	0	0	8518	36198	-76913
Permanent loads yg= 1.2	150C1F2	0	0	0	8518	36174	-76918
Wind angle: -45°	150C1F3	0	0	0	8518	36144	-76925
	380C2F1	17036	77777	156027	17036	72396	-153827
	380C2F2	17036	77181	155594	17036	72348	-153836
	380C2F3	17036	76450	155107	17036	72287	-153850
	RTG	4618	20406	41295	4618	19226	-40903
NL3/3	GW / opgw	0	0	0	3883	14130	-28996
Wind, -5°C	150C1F1	0	0	0	9901	38353	-80255
Permanent loads yg= 1.2	150C1F2	0	0	0	9901	38277	-80249
Wind angle: -45°	150C1F3	0	0	0	9901	38182	-80246
	380C2F1	19806	97020	177971	19802	76705	-160510
	380C2F2	19805	94667	175291	19802	76554	-160499
	380C2F3	19805	91779	172118	19802	76365	-160493
	RTG	7768	36134	64856	7767	27725	-57784
NL3/4	GW / opgw	0	0	0	2915	10557	-22386
Construction/maintenance, +5°C	150C1F1	0	0	0	9725	35742	-75935
Permanent loads yg= 1.2	150C1F2	0	0	0	9725	35718	-75940
Wind angle: -45°	150C1F3	0	0	0	9725	35688	-75948
	380C2F1	19451	76541	153370	19451	71483	-151869
	380C2F2	19451	75993	153041	19451	71436	-151881
	380C2F3	19451	75318	152674	19451	71377	-151896
	RTG	5823	22087	44897	5823	21006	-44720
NL3/1a	GW / opgw	0	0	0	1735	7440	-14693
Wind, 10°C	150C1F1	0	0	0	6391	26623	-53552
Permanent loads yg= 0.9	150C1F2	0	0	0	6391	26434	-53426
Wind angle: 0°	150C1F3	0	0	0	6390	26203	-53285
	380C2F1	12781	53245	107104	12781	53245	-107104
	380C2F2	12781	52868	106853	12781	52868	-106853
	380C2F3	12781	52405	106571	12781	52405	-106571
	RTG	3464	14212	28857	3464	14212	-28857
NL3/1b	GW / opgw	0	0	0	1734	7898	-16549
Wind, -20°C	150C1F1	0	0	0	6387	29501	-62176
Permanent loads yg= 0.9	150C1F2	0	0	0	6387	29460	-62173
Wind angle: 0°	150C1F3	0	0	0	6387	29408	-62172
	380C2F1	12774	59002	124352	12774	59002	-124352
	380C2F2	12774	58919	124347	12774	58919	-124347
	380C2F3	12774	58816	124344	12774	58816	-124344
	RTG	3463	15483	32705	3463	15483	-32705

NL3/3	GW / opgw	0	0	0	3304	13004	-25894
Wind, -5°C	150C1F1	0	0	0	7769	32583	-66833
Permanent loads yg= 0.9	150C1F2	0	0	0	7769	32443	-66770
Wind angle: 0°	150C1F3	0	0	0	7769	32268	-66702
	380C2F1	15538	65167	133667	15538	65167	-133667
	380C2F2	15538	64885	133541	15538	64885	-133541
	380C2F3	15538	64537	133405	15538	64537	-133405
	RTG	6610	25061	51190	6610	25061	-51190
NL3/4	GW / opgw	0	0	0	2336	8913	-18725
Construction/maintenance, +5°C	150C1F1	0	0	0	7593	29581	-62346
Permanent loads yg= 0.9	150C1F2	0	0	0	7593	29541	-62348
Wind angle: 0°	150C1F3	0	0	0	7593	29492	-62351
	380C2F1	15186	59161	124693	15186	59161	-124693
	380C2F2	15186	59082	124695	15186	59082	-124695
	380C2F3	15186	58984	124702	15186	58984	-124702
	RTG	4667	17663	37380	4667	17663	-37380
NL3/1a	GW / opgw	0	0	0	1735	13344	-22377
Wind, 10°C	150C1F1	0	0	0	6393	41605	-71713
Permanent loads yg= 0.9	150C1F2	0	0	0	6392	39839	-69303
Wind angle: 45°	150C1F3	0	0	0	6392	37633	-66331
	380C2F1	12781	51686	106203	12785	83209	-143427
	380C2F2	12781	51475	106115	12785	79677	-138605
	380C2F3	12781	51213	106020	12784	75266	-132662
	RTG	3464	13874	28690	3465	20757	-36495
NL3/1b	GW / opgw	0	0	0	1734	9072	-17537
Wind, -20°C	150C1F1	0	0	0	6387	32408	-64118
Permanent loads yg= 0.9	150C1F2	0	0	0	6387	32054	-63780
Wind angle: 45°	150C1F3	0	0	0	6387	31621	-63392
	380C2F1	12774	58650	124349	12774	64817	-128235
	380C2F2	12774	58600	124354	12774	64107	-127560
	380C2F3	12774	58537	124361	12774	63242	-126784
	RTG	3463	15405	32709	3463	16742	-33438
NL3/3	GW / opgw	0	0	0	3306	20937	-35040
Wind, -5°C	150C1F1	0	0	0	7771	43648	-78562
Permanent loads yg= 0.9	150C1F2	0	0	0	7771	42300	-76853
Wind angle: 45°	150C1F3	0	0	0	7770	40637	-74797
	380C2F1	15538	63989	133240	15542	87296	-157124
	380C2F2	15538	63826	133204	15541	84600	-153707
	380C2F3	15538	63624	133170	15541	81274	-149593
	RTG	6610	24584	51049	6612	33762	-59771
NL3/4	GW / opgw	0	0	0	2336	9895	-19301
Construction/maintenance, +5°C	150C1F1	0	0	0	7593	32206	-63680
Permanent loads yg= 0.9	150C1F2	0	0	0	7593	31893	-63432
Wind angle: 45°	150C1F3	0	0	0	7593	31509	-63151
	380C2F1	15186	58824	124722	15187	64412	-127360
	380C2F2	15186	58776	124730	15187	63786	-126864
	380C2F3	15186	58714	124742	15186	63019	-126301
	RTG	4667	17589	37393	4667	18753	-37748
NL3/1a	GW / opgw	0	0	0	1735	12751	-21541
Wind, 10°C	150C1F1	0	0	0	6392	40035	-69569
Permanent loads yg= 0.9	150C1F2	0	0	0	6392	38418	-67383
Wind angle: 90°	150C1F3	0	0	0	6392	36405	-64701
	380C2F1	12785	80070	139139	12785	80070	-139139
	380C2F2	12784	76836	134766	12784	76836	-134766
	380C2F3	12784	72810	129403	12784	72810	-129403
	RTG	3465	20054	35547	3465	20054	-35547
NL3/1b	GW / opgw	0	0	0	1734	8943	-17393
Wind, -20°C	150C1F1	0	0	0	6387	32093	-63816
Permanent loads yg= 0.9	150C1F2	0	0	0	6387	31774	-63526
Wind angle: 90°	150C1F3	0	0	0	6387	31384	-63193
	380C2F1	12774	64186	127633	12774	64186	-127633
	380C2F2	12774	63547	127051	12774	63547	-127051
	380C2F3	12774	62768	126386	12774	62768	-126386
	RTG	3463	16607	33320	3463	16607	-33320
NL3/3	GW / opgw	0	0	0	3306	20126	-33990
Wind, -5°C	150C1F1	0	0	0	7771	42449	-77041
Permanent loads yg= 0.9	150C1F2	0	0	0	7771	41226	-75518
Wind angle: 90°	150C1F3	0	0	0	7770	39721	-73694
	380C2F1	15541	84898	154082	15541	84898	-154082
	380C2F2	15541	82452	151036	15541	82452	-151036
	380C2F3	15541	79441	147388	15541	79441	-147388
	RTG	6612	32826	58647	6612	32826	-58647

NL3/4	GW / opgw	0	0	0	2336	9790	-19209
Construction/maintenance, +5°C	150C1F1	0	0	0	7593	31927	-63459
Permanent loads yg= 0.9	150C1F2	0	0	0	7593	31645	-63247
Wind angle: 90°	150C1F3	0	0	0	7593	31299	-63008
	380C2F1	15187	63855	126917	15187	63855	-126917
	380C2F2	15186	63290	126494	15186	63290	-126494
	380C2F3	15186	62598	126016	15186	62598	-126016
	RTG	4667	18640	37679	4667	18640	-37679
NL3/1a	GW / opgw	0	0	0	1735	7127	-14457
Wind, 10°C	150C1F1	0	0	0	6390	25843	-53102
Permanent loads yg= 0.9	150C1F2	0	0	0	6390	25737	-53057
Wind angle: -45°	150C1F3	0	0	0	6390	25607	-53010
	380C2F1	12785	83209	143427	12781	51686	-106203
	380C2F2	12785	79677	138605	12781	51475	-106115
	380C2F3	12784	75266	132662	12781	51213	-106020
	RTG	3465	20757	36495	3464	13874	-28690
NL3/1b	GW / opgw	0	0	0	1734	7831	-16541
Wind, -20°C	150C1F1	0	0	0	6387	29325	-62175
Permanent loads yg= 0.9	150C1F2	0	0	0	6387	29300	-62177
Wind angle: -45°	150C1F3	0	0	0	6387	29268	-62181
	380C2F1	12774	64817	128235	12774	58650	-124349
	380C2F2	12774	64107	127560	12774	58600	-124354
	380C2F3	12774	63242	126784	12774	58537	-124361
	RTG	3463	16742	33438	3463	15405	-32709
NL3/3	GW / opgw	0	0	0	3304	12574	-25660
Wind, -5°C	150C1F1	0	0	0	7769	31994	-66620
Permanent loads yg= 0.9	150C1F2	0	0	0	7769	31913	-66602
Wind angle: -45°	150C1F3	0	0	0	7769	31812	-66585
	380C2F1	15542	87296	157124	15538	63989	-133240
	380C2F2	15541	84600	153707	15538	63826	-133204
	380C2F3	15541	81274	149593	15538	63624	-133170
	RTG	6612	33762	59771	6610	24584	-51049
NL3/4	GW / opgw	0	0	0	2336	8851	-18727
Construction/maintenance, +5°C	150C1F1	0	0	0	7593	29412	-62361
Permanent loads yg= 0.9	150C1F2	0	0	0	7593	29388	-62365
Wind angle: -45°	150C1F3	0	0	0	7593	29357	-62371
	380C2F1	15187	64412	127360	15186	58824	-124722
	380C2F2	15187	63786	126864	15186	58776	-124730
	380C2F3	15186	63019	126301	15186	58714	-124742
	RTG	4667	18753	37748	4667	17589	-37393

ZWW4HL400

Loadcases for tower strength (Special limit state)

		Ahead			Back		
Loadcase according to 50341-3-15	Att. Point	Vertical [N]	Transversal [N]	Longitudinal [N]	Vertical [N]	Transversal [N]	Longitudinal [N]
NL3/1a	GW / opgw	2313	9177	18418	2313	9177	-18418
Wind, 10°C	150C1F1	8523	32999	67226	8523	32999	-67226
Permanent loads yg= 1.2	150C1F2	8523	32835	67152	8523	32835	-67152
Wind angle: 0°	150C1F3	8522	32632	67072	8522	32632	-67072
	380C2F1	0	0	0	17045	65999	-134453
	380C2F2	0	0	0	17045	65670	-134305
	380C2F3	0	0	0	17045	65264	-134145
	RTG	0	0	0	4620	17777	-36500
NL3/1b	GW / opgw	2312	9804	20637	2312	9804	-20637
Wind, -20°C	150C1F1	8518	36364	76893	8518	36364	-76893
Permanent loads yg= 1.2	150C1F2	8518	36325	76896	8518	36325	-76896
Wind angle: 0°	150C1F3	8518	36277	76901	8518	36277	-76901
	380C2F1	0	0	0	17036	72727	-153787
	380C2F2	0	0	0	17036	72650	-153792
	380C2F3	0	0	0	17036	72553	-153803
	RTG	0	0	0	4618	19300	-40891
NL3/3	GW / opgw	3883	14529	29165	3883	14529	-29165
Wind, -5°C	150C1F1	9901	38892	80361	9901	38892	-80361
Permanent loads yg= 1.2	150C1F2	9901	38764	80327	9901	38764	-80327
Wind angle: 0°	150C1F3	9901	38605	80291	9901	38605	-80291
	380C2F1	0	0	0	19802	77784	-160723
	380C2F2	0	0	0	19802	77528	-160653
	380C2F3	0	0	0	19802	77210	-160582
	RTG	0	0	0	7767	28176	-57870
NL3/4	GW / opgw	2915	10616	22378	2915	10616	-22378
Construction/maintenance, +5°C	150C1F1	9725	35903	75906	9725	35903	-75906
Permanent loads yg= 1.2	150C1F2	9725	35866	75911	9725	35866	-75911
Wind angle: 0°	150C1F3	9725	35819	75919	9725	35819	-75919
	380C2F1	0	0	0	19451	71807	-151812
	380C2F2	0	0	0	19451	71732	-151822
	380C2F3	0	0	0	19451	71637	-151837
	RTG	0	0	0	5823	21078	-44703
NL3/1a	GW / opgw	2313	8906	18274	2314	14308	-24444
Wind, 10°C	150C1F1	8522	32312	66975	8525	45813	-80736
Permanent loads yg= 1.2	150C1F2	8522	32218	66954	8524	44263	-78789
Wind angle: 45°	150C1F3	8522	32100	66934	8524	42347	-76437
	380C2F1	0	0	0	17049	91626	-161472
	380C2F2	0	0	0	17049	88526	-157578
	380C2F3	0	0	0	17048	84693	-152874
	RTG	0	0	0	4621	23345	-42043
NL3/1b	GW / opgw	2312	9742	20639	2312	10807	-21256
Wind, -20°C	150C1F1	8518	36198	76913	8518	38889	-78013
Permanent loads yg= 1.2	150C1F2	8518	36174	76918	8518	38591	-77797
Wind angle: 45°	150C1F3	8518	36144	76925	8518	38225	-77553
	380C2F1	0	0	0	17036	77777	-156027
	380C2F2	0	0	0	17036	77181	-155594
	380C2F3	0	0	0	17036	76450	-155107
	RTG	0	0	0	4618	20406	-41295
NL3/3	GW / opgw	3883	14130	28996	3885	21841	-36979
Wind, -5°C	150C1F1	9901	38353	80255	9903	48510	-88986
Permanent loads yg= 1.2	150C1F2	9901	38277	80249	9903	47334	-87645
Wind angle: 45°	150C1F3	9901	38182	80246	9902	45889	-86059
	380C2F1	0	0	0	19806	97020	-177971
	380C2F2	0	0	0	19805	94667	-175291
	380C2F3	0	0	0	19805	91779	-172118
	RTG	0	0	0	7768	36134	-64856
NL3/4	GW / opgw	2915	10557	22386	2915	11505	-22754
Construction/maintenance, +5°C	150C1F1	9725	35742	75935	9726	38271	-76685
Permanent loads yg= 1.2	150C1F2	9725	35718	75940	9726	37996	-76520
Wind angle: 45°	150C1F3	9725	35688	75948	9725	37659	-76337
	380C2F1	0	0	0	19451	76541	-153370
	380C2F2	0	0	0	19451	75993	-153041
	380C2F3	0	0	0	19451	75318	-152674
	RTG	0	0	0	5823	22087	-44897
NL3/1a	GW / opgw	2314	13771	23728	2314	13771	-23728
Wind, 10°C	150C1F1	8524	44435	79003	8524	44435	-79003
Permanent loads yg= 1.2	150C1F2	8524	43026	77263	8524	43026	-77263
Wind angle: 90°	150C1F3	8524	41289	75172	8524	41289	-75172
	380C2F1	0	0	0	17049	88869	-158005
	380C2F2	0	0	0	17048	86053	-154526
	380C2F3	0	0	0	17048	82578	-150345
	RTG	0	0	0	4621	22737	-41301

NL3/1b	GW / opgw	2312	10699	21159	2312	10699	-21159
Wind, -20°C	150C1F1	8518	38623	77820	8518	38623	-77820
Permanent loads yg= 1.2	150C1F2	8518	38354	77637	8518	38354	-77637
Wind angle: 90°	150C1F3	8518	38024	77431	8518	38024	-77431
	380C2F1	0	0	0	17036	77247	-155640
	380C2F2	0	0	0	17036	76709	-155273
	380C2F3	0	0	0	17036	76048	-154861
	RTG	0	0	0	4618	20291	-41221
NL3/3	GW / opgw	3885	21080	36034	3885	21080	-36034
Wind, -5°C	150C1F1	9903	47463	87791	9903	47463	-87791
Permanent loads yg= 1.2	150C1F2	9902	46400	86612	9902	46400	-86612
Wind angle: 90°	150C1F3	9902	45097	85222	9902	45097	-85222
	380C2F1	0	0	0	19805	94927	-175583
	380C2F2	0	0	0	19805	92801	-173223
	380C2F3	0	0	0	19804	90194	-170443
	RTG	0	0	0	7768	35276	-63898
NL3/4	GW / opgw	2915	11412	22688	2915	11412	-22688
Construction/maintenance, +5°C	150C1F1	9726	38027	76538	9726	38027	-76538
Permanent loads yg= 1.2	150C1F2	9726	37779	76399	9726	37779	-76399
Wind angle: 90°	150C1F3	9725	37473	76246	9725	37473	-76246
	380C2F1	0	0	0	19451	76053	-153076
	380C2F2	0	0	0	19451	75557	-152799
	380C2F3	0	0	0	19451	74945	-152493
	RTG	0	0	0	5823	21985	-44852
NL3/1a	GW / opgw	2314	14308	24444	2313	8906	-18274
Wind, 10°C	150C1F1	8525	45813	80736	8522	32312	-66975
Permanent loads yg= 1.2	150C1F2	8524	44263	78789	8522	32218	-66954
Wind angle: -45°	150C1F3	8524	42347	76437	8522	32100	-66934
	380C2F1	0	0	0	17045	64625	-133950
	380C2F2	0	0	0	17045	64435	-133908
	380C2F3	0	0	0	17045	64199	-133867
	RTG	0	0	0	4620	17475	-36413
NL3/1b	GW / opgw	2312	10807	21256	2312	9742	-20639
Wind, -20°C	150C1F1	8518	38889	78013	8518	36198	-76913
Permanent loads yg= 1.2	150C1F2	8518	38591	77797	8518	36174	-76918
Wind angle: -45°	150C1F3	8518	38225	77553	8518	36144	-76925
	380C2F1	0	0	0	17036	72396	-153827
	380C2F2	0	0	0	17036	72348	-153836
	380C2F3	0	0	0	17036	72287	-153850
	RTG	0	0	0	4618	19226	-40903
NL3/3	GW / opgw	3885	21841	36979	3883	14130	-28996
Wind, -5°C	150C1F1	9903	48510	88986	9901	38353	-80255
Permanent loads yg= 1.2	150C1F2	9903	47334	87645	9901	38277	-80249
Wind angle: -45°	150C1F3	9902	45889	86059	9901	38182	-80246
	380C2F1	0	0	0	19802	76705	-160510
	380C2F2	0	0	0	19802	76554	-160499
	380C2F3	0	0	0	19802	76365	-160493
	RTG	0	0	0	7767	27725	-57784
NL3/4	GW / opgw	2915	11505	22754	2915	10557	-22386
Construction/maintenance, +5°C	150C1F1	9726	38271	76685	9725	35742	-75935
Permanent loads yg= 1.2	150C1F2	9726	37996	76520	9725	35718	-75940
Wind angle: -45°	150C1F3	9725	37659	76337	9725	35688	-75948
	380C2F1	0	0	0	19451	71483	-151869
	380C2F2	0	0	0	19451	71436	-151881
	380C2F3	0	0	0	19451	71377	-151896
	RTG	0	0	0	5823	21006	-44720
NL3/1a	GW / opgw	1735	7440	14693	1735	7440	-14693
Wind, 10°C	150C1F1	6391	26623	53552	6391	26623	-53552
Permanent loads yg= 0.9	150C1F2	6391	26434	53426	6391	26434	-53426
Wind angle: 0°	150C1F3	6390	26203	53285	6390	26203	-53285
	380C2F1	0	0	0	12781	53245	-107104
	380C2F2	0	0	0	12781	52868	-106853
	380C2F3	0	0	0	12781	52405	-106571
	RTG	0	0	0	3464	14212	-28857
NL3/1b	GW / opgw	1734	7898	16549	1734	7898	-16549
Wind, -20°C	150C1F1	6387	29501	62176	6387	29501	-62176
Permanent loads yg= 0.9	150C1F2	6387	29460	62173	6387	29460	-62173
Wind angle: 0°	150C1F3	6387	29408	62172	6387	29408	-62172
	380C2F1	0	0	0	12774	59002	-124352
	380C2F2	0	0	0	12774	58919	-124347
	380C2F3	0	0	0	12774	58816	-124344
	RTG	0	0	0	3463	15483	-32705

NL3/3	GW / opgw	3304	13004	25894	3304	13004	-25894
Wind, -5°C	150C1F1	7769	32583	66833	7769	32583	-66833
Permanent loads yg= 0.9	150C1F2	7769	32443	66770	7769	32443	-66770
Wind angle: 0°	150C1F3	7769	32268	66702	7769	32268	-66702
	380C2F1	0	0	0	15538	65167	-133667
	380C2F2	0	0	0	15538	64885	-133541
	380C2F3	0	0	0	15538	64537	-133405
	RTG	0	0	0	6610	25061	-51190
NL3/4	GW / opgw	2336	8913	18725	2336	8913	-18725
Construction/maintenance, +5°C	150C1F1	7593	29581	62346	7593	29581	-62346
Permanent loads yg= 0.9	150C1F2	7593	29541	62348	7593	29541	-62348
Wind angle: 0°	150C1F3	7593	29492	62351	7593	29492	-62351
	380C2F1	0	0	0	15186	59161	-124693
	380C2F2	0	0	0	15186	59082	-124695
	380C2F3	0	0	0	15186	58984	-124702
	RTG	0	0	0	4667	17663	-37380
NL3/1a	GW / opgw	1735	7127	14457	1735	13344	-22377
Wind, 10°C	150C1F1	6390	25843	53102	6393	41605	-71713
Permanent loads yg= 0.9	150C1F2	6390	25737	53057	6392	39839	-69303
Wind angle: 45°	150C1F3	6390	25607	53010	6392	37633	-66331
	380C2F1	0	0	0	12785	83209	-143427
	380C2F2	0	0	0	12785	79677	-138605
	380C2F3	0	0	0	12784	75266	-132662
	RTG	0	0	0	3465	20757	-36495
NL3/1b	GW / opgw	1734	7831	16541	1734	9072	-17537
Wind, -20°C	150C1F1	6387	29325	62175	6387	32408	-64118
Permanent loads yg= 0.9	150C1F2	6387	29300	62177	6387	32054	-63780
Wind angle: 45°	150C1F3	6387	29268	62181	6387	31621	-63392
	380C2F1	0	0	0	12774	64817	-128235
	380C2F2	0	0	0	12774	64107	-127560
	380C2F3	0	0	0	12774	63242	-126784
	RTG	0	0	0	3463	16742	-33438
NL3/3	GW / opgw	3304	12574	25660	3306	20937	-35040
Wind, -5°C	150C1F1	7769	31994	66620	7771	43648	-78562
Permanent loads yg= 0.9	150C1F2	7769	31913	66602	7771	42300	-76853
Wind angle: 45°	150C1F3	7769	31812	66585	7770	40637	-74797
	380C2F1	0	0	0	15542	87296	-157124
	380C2F2	0	0	0	15541	84600	-153707
	380C2F3	0	0	0	15541	81274	-149593
	RTG	0	0	0	6612	33762	-59771
NL3/4	GW / opgw	2336	8851	18727	2336	9895	-19301
Construction/maintenance, +5°C	150C1F1	7593	29412	62361	7593	32206	-63680
Permanent loads yg= 0.9	150C1F2	7593	29388	62365	7593	31893	-63432
Wind angle: 45°	150C1F3	7593	29357	62371	7593	31509	-63151
	380C2F1	0	0	0	15187	64412	-127360
	380C2F2	0	0	0	15187	63786	-126864
	380C2F3	0	0	0	15186	63019	-126301
	RTG	0	0	0	4667	18753	-37748
NL3/1a	GW / opgw	1735	12751	21541	1735	12751	-21541
Wind, 10°C	150C1F1	6392	40035	69569	6392	40035	-69569
Permanent loads yg= 0.9	150C1F2	6392	38418	67383	6392	38418	-67383
Wind angle: 90°	150C1F3	6392	36405	64701	6392	36405	-64701
	380C2F1	0	0	0	12785	80070	-139139
	380C2F2	0	0	0	12784	76836	-134766
	380C2F3	0	0	0	12784	72810	-129403
	RTG	0	0	0	3465	20054	-35547
NL3/1b	GW / opgw	1734	8943	17393	1734	8943	-17393
Wind, -20°C	150C1F1	6387	32093	63816	6387	32093	-63816
Permanent loads yg= 0.9	150C1F2	6387	31774	63526	6387	31774	-63526
Wind angle: 90°	150C1F3	6387	31384	63193	6387	31384	-63193
	380C2F1	0	0	0	12774	64186	-127633
	380C2F2	0	0	0	12774	63547	-127051
	380C2F3	0	0	0	12774	62768	-126386
	RTG	0	0	0	3463	16607	-33320
NL3/3	GW / opgw	3306	20126	33990	3306	20126	-33990
Wind, -5°C	150C1F1	7771	42449	77041	7771	42449	-77041
Permanent loads yg= 0.9	150C1F2	7771	41226	75518	7771	41226	-75518
Wind angle: 90°	150C1F3	7770	39721	73694	7770	39721	-73694
	380C2F1	0	0	0	15541	84898	-154082
	380C2F2	0	0	0	15541	82452	-151036
	380C2F3	0	0	0	15541	79441	-147388
	RTG	0	0	0	6612	32826	-58647

NL3/4	GW / opgw	2336	9790	19209	2336	9790	-19209
Construction/maintenance, +5°C	150C1F1	7593	31927	63459	7593	31927	-63459
Permanent loads yg= 0.9	150C1F2	7593	31645	63247	7593	31645	-63247
Wind angle: 90°	150C1F3	7593	31299	63008	7593	31299	-63008
	380C2F1	0	0	0	15187	63855	-126917
	380C2F2	0	0	0	15186	63290	-126494
	380C2F3	0	0	0	15186	62598	-126016
	RTG	0	0	0	4667	18640	-37679
NL3/1a	GW / opgw	1735	13344	22377	1735	7127	-14457
Wind, 10°C	150C1F1	6393	41605	71713	6390	25843	-53102
Permanent loads yg= 0.9	150C1F2	6392	39839	69303	6390	25737	-53057
Wind angle: -45°	150C1F3	6392	37633	66331	6390	25607	-53010
	380C2F1	0	0	0	12781	51686	-106203
	380C2F2	0	0	0	12781	51475	-106115
	380C2F3	0	0	0	12781	51213	-106020
	RTG	0	0	0	3464	13874	-28690
NL3/1b	GW / opgw	1734	9072	17537	1734	7831	-16541
Wind, -20°C	150C1F1	6387	32408	64118	6387	29325	-62175
Permanent loads yg= 0.9	150C1F2	6387	32054	63780	6387	29300	-62177
Wind angle: -45°	150C1F3	6387	31621	63392	6387	29268	-62181
	380C2F1	0	0	0	12774	58650	-124349
	380C2F2	0	0	0	12774	58600	-124354
	380C2F3	0	0	0	12774	58537	-124361
	RTG	0	0	0	3463	15405	-32709
NL3/3	GW / opgw	3306	20937	35040	3304	12574	-25660
Wind, -5°C	150C1F1	7771	43648	78562	7769	31994	-66620
Permanent loads yg= 0.9	150C1F2	7771	42300	76853	7769	31913	-66602
Wind angle: -45°	150C1F3	7770	40637	74797	7769	31812	-66585
	380C2F1	0	0	0	15538	63989	-133240
	380C2F2	0	0	0	15538	63826	-133204
	380C2F3	0	0	0	15538	63624	-133170
	RTG	0	0	0	6610	24584	-51049
NL3/4	GW / opgw	2336	9895	19301	2336	8851	-18727
Construction/maintenance, +5°C	150C1F1	7593	32206	63680	7593	29412	-62361
Permanent loads yg= 0.9	150C1F2	7593	31893	63432	7593	29388	-62365
Wind angle: -45°	150C1F3	7593	31509	63151	7593	29357	-62371
	380C2F1	0	0	0	15186	58824	-124722
	380C2F2	0	0	0	15186	58776	-124730
	380C2F3	0	0	0	15186	58714	-124742
	RTG	0	0	0	4667	17589	-37393

ZWW4HL400

Loadcases for tower strength (Special limit state)

		Ahead			Back		
Loadcase according to 50341-3-15	Att. Point	Vertical [N]	Transversal [N]	Longitudinal [N]	Vertical [N]	Transversal [N]	Longitudinal [N]
NL3/1a	GW / opgw	2313	9177	18418	0	0	0
Wind, 10°C	150C1F1	8523	32999	67226	0	0	0
Permanent loads yg= 1.2	150C1F2	8523	32835	67152	0	0	0
Wind angle: 0°	150C1F3	8522	32632	67072	0	0	0
	380C2F1	17045	65999	134453	17045	65999	-134453
	380C2F2	17045	65670	134305	17045	65670	-134305
	380C2F3	17045	65264	134145	17045	65264	-134145
	RTG	0	0	0	4620	17777	-36500
NL3/1b	GW / opgw	2312	9804	20637	0	0	0
Wind, -20°C	150C1F1	8518	36364	76893	0	0	0
Permanent loads yg= 1.2	150C1F2	8518	36325	76896	0	0	0
Wind angle: 0°	150C1F3	8518	36277	76901	0	0	0
	380C2F1	17036	72727	153787	17036	72727	-153787
	380C2F2	17036	72650	153792	17036	72650	-153792
	380C2F3	17036	72553	153803	17036	72553	-153803
	RTG	0	0	0	4618	19300	-40891
NL3/3	GW / opgw	3883	14529	29165	0	0	0
Wind, -5°C	150C1F1	9901	38892	80361	0	0	0
Permanent loads yg= 1.2	150C1F2	9901	38764	80327	0	0	0
Wind angle: 0°	150C1F3	9901	38605	80291	0	0	0
	380C2F1	19802	77784	160723	19802	77784	-160723
	380C2F2	19802	77528	160653	19802	77528	-160653
	380C2F3	19802	77210	160582	19802	77210	-160582
	RTG	0	0	0	7767	28176	-57870
NL3/4	GW / opgw	2915	10616	22378	0	0	0
Construction/maintenance, +5°C	150C1F1	9725	35903	75906	0	0	0
Permanent loads yg= 1.2	150C1F2	9725	35866	75911	0	0	0
Wind angle: 0°	150C1F3	9725	35819	75919	0	0	0
	380C2F1	19451	71807	151812	19451	71807	-151812
	380C2F2	19451	71732	151822	19451	71732	-151822
	380C2F3	19451	71637	151837	19451	71637	-151837
	RTG	0	0	0	5823	21078	-44703
NL3/1a	GW / opgw	2313	8906	18274	0	0	0
Wind, 10°C	150C1F1	8522	32312	66975	0	0	0
Permanent loads yg= 1.2	150C1F2	8522	32218	66954	0	0	0
Wind angle: 45°	150C1F3	8522	32100	66934	0	0	0
	380C2F1	17045	64625	133950	17049	91626	-161472
	380C2F2	17045	64435	133908	17049	88526	-157578
	380C2F3	17045	64199	133867	17048	84693	-152874
	RTG	0	0	0	4621	23345	-42043
NL3/1b	GW / opgw	2312	9742	20639	0	0	0
Wind, -20°C	150C1F1	8518	36198	76913	0	0	0
Permanent loads yg= 1.2	150C1F2	8518	36174	76918	0	0	0
Wind angle: 45°	150C1F3	8518	36144	76925	0	0	0
	380C2F1	17036	72396	153827	17036	77777	-156027
	380C2F2	17036	72348	153836	17036	77181	-155594
	380C2F3	17036	72287	153850	17036	76450	-155107
	RTG	0	0	0	4618	20406	-41295
NL3/3	GW / opgw	3883	14130	28996	0	0	0
Wind, -5°C	150C1F1	9901	38353	80255	0	0	0
Permanent loads yg= 1.2	150C1F2	9901	38277	80249	0	0	0
Wind angle: 45°	150C1F3	9901	38182	80246	0	0	0
	380C2F1	19802	76705	160510	19806	97020	-177971
	380C2F2	19802	76554	160499	19805	94667	-175291
	380C2F3	19802	76365	160493	19805	91779	-172118
	RTG	0	0	0	7768	36134	-64856
NL3/4	GW / opgw	2915	10557	22386	0	0	0
Construction/maintenance, +5°C	150C1F1	9725	35742	75935	0	0	0
Permanent loads yg= 1.2	150C1F2	9725	35718	75940	0	0	0
Wind angle: 45°	150C1F3	9725	35688	75948	0	0	0
	380C2F1	19451	71483	151869	19451	76541	-153370
	380C2F2	19451	71436	151881	19451	75993	-153041
	380C2F3	19451	71377	151896	19451	75318	-152674
	RTG	0	0	0	5823	22087	-44897
NL3/1a	GW / opgw	2314	13771	23728	0	0	0
Wind, 10°C	150C1F1	8524	44435	79003	0	0	0
Permanent loads yg= 1.2	150C1F2	8524	43026	77263	0	0	0
Wind angle: 90°	150C1F3	8524	41289	75172	0	0	0
	380C2F1	17049	88869	158005	17049	88869	-158005
	380C2F2	17048	86053	154526	17048	86053	-154526
	380C2F3	17048	82578	150345	17048	82578	-150345
	RTG	0	0	0	4621	22737	-41301

NL3/1b	GW / opgw	2312	10699	21159	0	0	0
Wind, -20°C	150C1F1	8518	38623	77820	0	0	0
Permanent loads yg= 1.2	150C1F2	8518	38354	77637	0	0	0
Wind angle: 90°	150C1F3	8518	38024	77431	0	0	0
	380C2F1	17036	77247	155640	17036	77247	-155640
	380C2F2	17036	76709	155273	17036	76709	-155273
	380C2F3	17036	76048	154861	17036	76048	-154861
	RTG	0	0	0	4618	20291	-41221
NL3/3	GW / opgw	3885	21080	36034	0	0	0
Wind, -5°C	150C1F1	9903	47463	87791	0	0	0
Permanent loads yg= 1.2	150C1F2	9902	46400	86612	0	0	0
Wind angle: 90°	150C1F3	9902	45097	85222	0	0	0
	380C2F1	19805	94927	175583	19805	94927	-175583
	380C2F2	19805	92801	173223	19805	92801	-173223
	380C2F3	19804	90194	170443	19804	90194	-170443
	RTG	0	0	0	7768	35276	-63898
NL3/4	GW / opgw	2915	11412	22688	0	0	0
Construction/maintenance, +5°C	150C1F1	9726	38027	76538	0	0	0
Permanent loads yg= 1.2	150C1F2	9726	37779	76399	0	0	0
Wind angle: 90°	150C1F3	9725	37473	76246	0	0	0
	380C2F1	19451	76053	153076	19451	76053	-153076
	380C2F2	19451	75557	152799	19451	75557	-152799
	380C2F3	19451	74945	152493	19451	74945	-152493
	RTG	0	0	0	5823	21985	-44852
NL3/1a	GW / opgw	2314	14308	24444	0	0	0
Wind, 10°C	150C1F1	8525	45813	80736	0	0	0
Permanent loads yg= 1.2	150C1F2	8524	44263	78789	0	0	0
Wind angle: -45°	150C1F3	8524	42347	76437	0	0	0
	380C2F1	17049	91626	161472	17045	64625	-133950
	380C2F2	17049	88526	157578	17045	64435	-133908
	380C2F3	17048	84693	152874	17045	64199	-133867
	RTG	0	0	0	4620	17475	-36413
NL3/1b	GW / opgw	2312	10807	21256	0	0	0
Wind, -20°C	150C1F1	8518	38889	78013	0	0	0
Permanent loads yg= 1.2	150C1F2	8518	38591	77797	0	0	0
Wind angle: -45°	150C1F3	8518	38225	77553	0	0	0
	380C2F1	17036	77777	156027	17036	72396	-153827
	380C2F2	17036	77181	155594	17036	72348	-153836
	380C2F3	17036	76450	155107	17036	72287	-153850
	RTG	0	0	0	4618	19226	-40903
NL3/3	GW / opgw	3885	21841	36979	0	0	0
Wind, -5°C	150C1F1	9903	48510	88986	0	0	0
Permanent loads yg= 1.2	150C1F2	9903	47334	87645	0	0	0
Wind angle: -45°	150C1F3	9902	45889	86059	0	0	0
	380C2F1	19806	97020	177971	19802	76705	-160510
	380C2F2	19805	94667	175291	19802	76554	-160499
	380C2F3	19805	91779	172118	19802	76365	-160493
	RTG	0	0	0	7767	27725	-57784
NL3/4	GW / opgw	2915	11505	22754	0	0	0
Construction/maintenance, +5°C	150C1F1	9726	38271	76685	0	0	0
Permanent loads yg= 1.2	150C1F2	9726	37996	76520	0	0	0
Wind angle: -45°	150C1F3	9725	37659	76337	0	0	0
	380C2F1	19451	76541	153370	19451	71483	-151869
	380C2F2	19451	75993	153041	19451	71436	-151881
	380C2F3	19451	75318	152674	19451	71377	-151896
	RTG	0	0	0	5823	21006	-44720
NL3/1a	GW / opgw	1735	7440	14693	0	0	0
Wind, 10°C	150C1F1	6391	26623	53552	0	0	0
Permanent loads yg= 0.9	150C1F2	6391	26434	53426	0	0	0
Wind angle: 0°	150C1F3	6390	26203	53285	0	0	0
	380C2F1	12781	53245	107104	12781	53245	-107104
	380C2F2	12781	52868	106853	12781	52868	-106853
	380C2F3	12781	52405	106571	12781	52405	-106571
	RTG	0	0	0	3464	14212	-28857
NL3/1b	GW / opgw	1734	7898	16549	0	0	0
Wind, -20°C	150C1F1	6387	29501	62176	0	0	0
Permanent loads yg= 0.9	150C1F2	6387	29460	62173	0	0	0
Wind angle: 0°	150C1F3	6387	29408	62172	0	0	0
	380C2F1	12774	59002	124352	12774	59002	-124352
	380C2F2	12774	58919	124347	12774	58919	-124347
	380C2F3	12774	58816	124344	12774	58816	-124344
	RTG	0	0	0	3463	15483	-32705

NL3/3	GW / opgw	3304	13004	25894	0	0	0
Wind, -5°C	150C1F1	7769	32583	66833	0	0	0
Permanent loads yg= 0.9	150C1F2	7769	32443	66770	0	0	0
Wind angle: 0°	150C1F3	7769	32268	66702	0	0	0
	380C2F1	15538	65167	133667	15538	65167	-133667
	380C2F2	15538	64885	133541	15538	64885	-133541
	380C2F3	15538	64537	133405	15538	64537	-133405
	RTG	0	0	0	6610	25061	-51190
NL3/4	GW / opgw	2336	8913	18725	0	0	0
Construction/maintenance, +5°C	150C1F1	7593	29581	62346	0	0	0
Permanent loads yg= 0.9	150C1F2	7593	29541	62348	0	0	0
Wind angle: 0°	150C1F3	7593	29492	62351	0	0	0
	380C2F1	15186	59161	124693	15186	59161	-124693
	380C2F2	15186	59082	124695	15186	59082	-124695
	380C2F3	15186	58984	124702	15186	58984	-124702
	RTG	0	0	0	4667	17663	-37380
NL3/1a	GW / opgw	1735	7127	14457	0	0	0
Wind, 10°C	150C1F1	6390	25843	53102	0	0	0
Permanent loads yg= 0.9	150C1F2	6390	25737	53057	0	0	0
Wind angle: 45°	150C1F3	6390	25607	53010	0	0	0
	380C2F1	12781	51686	106203	12785	83209	-143427
	380C2F2	12781	51475	106115	12785	79677	-138605
	380C2F3	12781	51213	106020	12784	75266	-132662
	RTG	0	0	0	3465	20757	-36495
NL3/1b	GW / opgw	1734	7831	16541	0	0	0
Wind, -20°C	150C1F1	6387	29325	62175	0	0	0
Permanent loads yg= 0.9	150C1F2	6387	29300	62177	0	0	0
Wind angle: 45°	150C1F3	6387	29268	62181	0	0	0
	380C2F1	12774	58650	124349	12774	64817	-128235
	380C2F2	12774	58600	124354	12774	64107	-127560
	380C2F3	12774	58537	124361	12774	63242	-126784
	RTG	0	0	0	3463	16742	-33438
NL3/3	GW / opgw	3304	12574	25660	0	0	0
Wind, -5°C	150C1F1	7769	31994	66620	0	0	0
Permanent loads yg= 0.9	150C1F2	7769	31913	66602	0	0	0
Wind angle: 45°	150C1F3	7769	31812	66585	0	0	0
	380C2F1	15538	63989	133240	15542	87296	-157124
	380C2F2	15538	63826	133204	15541	84600	-153707
	380C2F3	15538	63624	133170	15541	81274	-149593
	RTG	0	0	0	6612	33762	-59771
NL3/4	GW / opgw	2336	8851	18727	0	0	0
Construction/maintenance, +5°C	150C1F1	7593	29412	62361	0	0	0
Permanent loads yg= 0.9	150C1F2	7593	29388	62365	0	0	0
Wind angle: 45°	150C1F3	7593	29357	62371	0	0	0
	380C2F1	15186	58824	124722	15187	64412	-127360
	380C2F2	15186	58776	124730	15187	63786	-126864
	380C2F3	15186	58714	124742	15186	63019	-126301
	RTG	0	0	0	4667	18753	-37748
NL3/1a	GW / opgw	1735	12751	21541	0	0	0
Wind, 10°C	150C1F1	6392	40035	69569	0	0	0
Permanent loads yg= 0.9	150C1F2	6392	38418	67383	0	0	0
Wind angle: 90°	150C1F3	6392	36405	64701	0	0	0
	380C2F1	12785	80070	139139	12785	80070	-139139
	380C2F2	12784	76836	134766	12784	76836	-134766
	380C2F3	12784	72810	129403	12784	72810	-129403
	RTG	0	0	0	3465	20054	-35547
NL3/1b	GW / opgw	1734	8943	17393	0	0	0
Wind, -20°C	150C1F1	6387	32093	63816	0	0	0
Permanent loads yg= 0.9	150C1F2	6387	31774	63526	0	0	0
Wind angle: 90°	150C1F3	6387	31384	63193	0	0	0
	380C2F1	12774	64186	127633	12774	64186	-127633
	380C2F2	12774	63547	127051	12774	63547	-127051
	380C2F3	12774	62768	126386	12774	62768	-126386
	RTG	0	0	0	3463	16607	-33320
NL3/3	GW / opgw	3306	20126	33990	0	0	0
Wind, -5°C	150C1F1	7771	42449	77041	0	0	0
Permanent loads yg= 0.9	150C1F2	7771	41226	75518	0	0	0
Wind angle: 90°	150C1F3	7770	39721	73694	0	0	0
	380C2F1	15541	84898	154082	15541	84898	-154082
	380C2F2	15541	82452	151036	15541	82452	-151036
	380C2F3	15541	79441	147388	15541	79441	-147388
	RTG	0	0	0	6612	32826	-58647

NL3/4	GW / opgw	2336	9790	19209	0	0	0
Construction/maintenance, +5°C	150C1F1	7593	31927	63459	0	0	0
Permanent loads yg= 0.9	150C1F2	7593	31645	63247	0	0	0
Wind angle: 90°	150C1F3	7593	31299	63008	0	0	0
	380C2F1	15187	63855	126917	15187	63855	-126917
	380C2F2	15186	63290	126494	15186	63290	-126494
	380C2F3	15186	62598	126016	15186	62598	-126016
	RTG	0	0	0	4667	18640	-37679
NL3/1a	GW / opgw	1735	13344	22377	0	0	0
Wind, 10°C	150C1F1	6393	41605	71713	0	0	0
Permanent loads yg= 0.9	150C1F2	6392	39839	69303	0	0	0
Wind angle: -45°	150C1F3	6392	37633	66331	0	0	0
	380C2F1	12785	83209	143427	12781	51686	-106203
	380C2F2	12785	79677	138605	12781	51475	-106115
	380C2F3	12784	75266	132662	12781	51213	-106020
	RTG	0	0	0	3464	13874	-28690
NL3/1b	GW / opgw	1734	9072	17537	0	0	0
Wind, -20°C	150C1F1	6387	32408	64118	0	0	0
Permanent loads yg= 0.9	150C1F2	6387	32054	63780	0	0	0
Wind angle: -45°	150C1F3	6387	31621	63392	0	0	0
	380C2F1	12774	64817	128235	12774	58650	-124349
	380C2F2	12774	64107	127560	12774	58600	-124354
	380C2F3	12774	63242	126784	12774	58537	-124361
	RTG	0	0	0	3463	15405	-32709
NL3/3	GW / opgw	3306	20937	35040	0	0	0
Wind, -5°C	150C1F1	7771	43648	78562	0	0	0
Permanent loads yg= 0.9	150C1F2	7771	42300	76853	0	0	0
Wind angle: -45°	150C1F3	7770	40637	74797	0	0	0
	380C2F1	15542	87296	157124	15538	63989	-133240
	380C2F2	15541	84600	153707	15538	63826	-133204
	380C2F3	15541	81274	149593	15538	63624	-133170
	RTG	0	0	0	6610	24584	-51049
NL3/4	GW / opgw	2336	9895	19301	0	0	0
Construction/maintenance, +5°C	150C1F1	7593	32206	63680	0	0	0
Permanent loads yg= 0.9	150C1F2	7593	31893	63432	0	0	0
Wind angle: -45°	150C1F3	7593	31509	63151	0	0	0
	380C2F1	15187	64412	127360	15186	58824	-124722
	380C2F2	15187	63786	126864	15186	58776	-124730
	380C2F3	15186	63019	126301	15186	58714	-124742
	RTG	0	0	0	4667	17589	-37393

ZWW4HL400

Loadcases for tower strength (Special limit state)

		Ahead			Back		
Loadcase according to 50341-3-15	Att. Point	Vertical [N]	Transversal [N]	Longitudinal [N]	Vertical [N]	Transversal [N]	Longitudinal [N]
NL3/1a	GW / opgw	2313	9177	18418	2313	9177	-18418
Wind, 10°C	150C1F1	8523	32999	67226	8523	32999	-67226
Permanent loads yg= 1.2	150C1F2	8523	32835	67152	8523	32835	-67152
Wind angle: 0°	150C1F3	8522	32632	67072	8522	32632	-67072
	380C2F1	17045	65999	134453	17045	65999	-134453
	380C2F2	17045	65670	134305	17045	65670	-134305
	380C2F3	17045	65264	134145	17045	65264	-134145
	RTG	0	0	0	4620	17777	-36500
NL3/1b	GW / opgw	2312	9804	20637	2312	9804	-20637
Wind, -20°C	150C1F1	8518	36364	76893	8518	36364	-76893
Permanent loads yg= 1.2	150C1F2	8518	36325	76896	8518	36325	-76896
Wind angle: 0°	150C1F3	8518	36277	76901	8518	36277	-76901
	380C2F1	17036	72727	153787	17036	72727	-153787
	380C2F2	17036	72650	153792	17036	72650	-153792
	380C2F3	17036	72553	153803	17036	72553	-153803
	RTG	0	0	0	4618	19300	-40891
NL3/3	GW / opgw	3883	14529	29165	3883	14529	-29165
Wind, -5°C	150C1F1	9901	38892	80361	9901	38892	-80361
Permanent loads yg= 1.2	150C1F2	9901	38764	80327	9901	38764	-80327
Wind angle: 0°	150C1F3	9901	38605	80291	9901	38605	-80291
	380C2F1	19802	77784	160723	19802	77784	-160723
	380C2F2	19802	77528	160653	19802	77528	-160653
	380C2F3	19802	77210	160582	19802	77210	-160582
	RTG	0	0	0	7767	28176	-57870
NL3/4	GW / opgw	2915	10616	22378	2915	10616	-22378
Construction/maintenance, +5°C	150C1F1	9725	35903	75906	9725	35903	-75906
Permanent loads yg= 1.2	150C1F2	9725	35866	75911	9725	35866	-75911
Wind angle: 0°	150C1F3	9725	35819	75919	9725	35819	-75919
	380C2F1	19451	71807	151812	19451	71807	-151812
	380C2F2	19451	71732	151822	19451	71732	-151822
	380C2F3	19451	71637	151837	19451	71637	-151837
	RTG	0	0	0	5823	21078	-44703
NL3/1a	GW / opgw	2313	8906	18274	2314	14308	-24444
Wind, 10°C	150C1F1	8522	32312	66975	8525	45813	-80736
Permanent loads yg= 1.2	150C1F2	8522	32218	66954	8524	44263	-78789
Wind angle: 45°	150C1F3	8522	32100	66934	8524	42347	-76437
	380C2F1	17045	64625	133950	17049	91626	-161472
	380C2F2	17045	64435	133908	17049	88526	-157578
	380C2F3	17045	64199	133867	17048	84693	-152874
	RTG	0	0	0	4621	23345	-42043
NL3/1b	GW / opgw	2312	9742	20639	2312	10807	-21256
Wind, -20°C	150C1F1	8518	36198	76913	8518	38889	-78013
Permanent loads yg= 1.2	150C1F2	8518	36174	76918	8518	38591	-77797
Wind angle: 45°	150C1F3	8518	36144	76925	8518	38225	-77553
	380C2F1	17036	72396	153827	17036	77777	-156027
	380C2F2	17036	72348	153836	17036	77181	-155594
	380C2F3	17036	72287	153850	17036	76450	-155107
	RTG	0	0	0	4618	20406	-41295
NL3/3	GW / opgw	3883	14130	28996	3885	21841	-36979
Wind, -5°C	150C1F1	9901	38353	80255	9903	48510	-88986
Permanent loads yg= 1.2	150C1F2	9901	38277	80249	9903	47334	-87645
Wind angle: 45°	150C1F3	9901	38182	80246	9902	45889	-86059
	380C2F1	19802	76705	160510	19806	97020	-177971
	380C2F2	19802	76554	160499	19805	94667	-175291
	380C2F3	19802	76365	160493	19805	91779	-172118
	RTG	0	0	0	7768	36134	-64856
NL3/4	GW / opgw	2915	10557	22386	2915	11505	-22754
Construction/maintenance, +5°C	150C1F1	9725	35742	75935	9726	38271	-76685
Permanent loads yg= 1.2	150C1F2	9725	35718	75940	9726	37996	-76520
Wind angle: 45°	150C1F3	9725	35688	75948	9725	37659	-76337
	380C2F1	19451	71483	151869	19451	76541	-153370
	380C2F2	19451	71436	151881	19451	75993	-153041
	380C2F3	19451	71377	151896	19451	75318	-152674
	RTG	0	0	0	5823	22087	-44897
NL3/1a	GW / opgw	2314	13771	23728	2314	13771	-23728
Wind, 10°C	150C1F1	8524	44435	79003	8524	44435	-79003
Permanent loads yg= 1.2	150C1F2	8524	43026	77263	8524	43026	-77263
Wind angle: 90°	150C1F3	8524	41289	75172	8524	41289	-75172
	380C2F1	17049	88869	158005	17049	88869	-158005
	380C2F2	17048	86053	154526	17048	86053	-154526
	380C2F3	17048	82578	150345	17048	82578	-150345
	RTG	0	0	0	4621	22737	-41301

NL3/1b	GW / opgw	2312	10699	21159	2312	10699	-21159
Wind, -20°C	150C1F1	8518	38623	77820	8518	38623	-77820
Permanent loads yg= 1.2	150C1F2	8518	38354	77637	8518	38354	-77637
Wind angle: 90°	150C1F3	8518	38024	77431	8518	38024	-77431
	380C2F1	17036	77247	155640	17036	77247	-155640
	380C2F2	17036	76709	155273	17036	76709	-155273
	380C2F3	17036	76048	154861	17036	76048	-154861
	RTG	0	0	0	4618	20291	-41221
NL3/3	GW / opgw	3885	21080	36034	3885	21080	-36034
Wind, -5°C	150C1F1	9903	47463	87791	9903	47463	-87791
Permanent loads yg= 1.2	150C1F2	9902	46400	86612	9902	46400	-86612
Wind angle: 90°	150C1F3	9902	45097	85222	9902	45097	-85222
	380C2F1	19805	94927	175583	19805	94927	-175583
	380C2F2	19805	92801	173223	19805	92801	-173223
	380C2F3	19804	90194	170443	19804	90194	-170443
	RTG	0	0	0	7768	35276	-63898
NL3/4	GW / opgw	2915	11412	22688	2915	11412	-22688
Construction/maintenance, +5°C	150C1F1	9726	38027	76538	9726	38027	-76538
Permanent loads yg= 1.2	150C1F2	9726	37779	76399	9726	37779	-76399
Wind angle: 90°	150C1F3	9725	37473	76246	9725	37473	-76246
	380C2F1	19451	76053	153076	19451	76053	-153076
	380C2F2	19451	75557	152799	19451	75557	-152799
	380C2F3	19451	74945	152493	19451	74945	-152493
	RTG	0	0	0	5823	21985	-44852
NL3/1a	GW / opgw	2314	14308	24444	2313	8906	-18274
Wind, 10°C	150C1F1	8525	45813	80736	8522	32312	-66975
Permanent loads yg= 1.2	150C1F2	8524	44263	78789	8522	32218	-66954
Wind angle: -45°	150C1F3	8524	42347	76437	8522	32100	-66934
	380C2F1	17049	91626	161472	17045	64625	-133950
	380C2F2	17049	88526	157578	17045	64435	-133908
	380C2F3	17048	84693	152874	17045	64199	-133867
	RTG	0	0	0	4620	17475	-36413
NL3/1b	GW / opgw	2312	10807	21256	2312	9742	-20639
Wind, -20°C	150C1F1	8518	38889	78013	8518	36198	-76913
Permanent loads yg= 1.2	150C1F2	8518	38591	77797	8518	36174	-76918
Wind angle: -45°	150C1F3	8518	38225	77553	8518	36144	-76925
	380C2F1	17036	77777	156027	17036	72396	-153827
	380C2F2	17036	77181	155594	17036	72348	-153836
	380C2F3	17036	76450	155107	17036	72287	-153850
	RTG	0	0	0	4618	19226	-40903
NL3/3	GW / opgw	3885	21841	36979	3883	14130	-28996
Wind, -5°C	150C1F1	9903	48510	88986	9901	38353	-80255
Permanent loads yg= 1.2	150C1F2	9903	47334	87645	9901	38277	-80249
Wind angle: -45°	150C1F3	9902	45889	86059	9901	38182	-80246
	380C2F1	19806	97020	177971	19802	76705	-160510
	380C2F2	19805	94667	175291	19802	76554	-160499
	380C2F3	19805	91779	172118	19802	76365	-160493
	RTG	0	0	0	7767	27725	-57784
NL3/4	GW / opgw	2915	11505	22754	2915	10557	-22386
Construction/maintenance, +5°C	150C1F1	9726	38271	76685	9725	35742	-75935
Permanent loads yg= 1.2	150C1F2	9726	37996	76520	9725	35718	-75940
Wind angle: -45°	150C1F3	9725	37659	76337	9725	35688	-75948
	380C2F1	19451	76541	153370	19451	71483	-151869
	380C2F2	19451	75993	153041	19451	71436	-151881
	380C2F3	19451	75318	152674	19451	71377	-151896
	RTG	0	0	0	5823	21006	-44720
NL3/1a	GW / opgw	1735	7440	14693	1735	7440	-14693
Wind, 10°C	150C1F1	6391	26623	53552	6391	26623	-53552
Permanent loads yg= 0.9	150C1F2	6391	26434	53426	6391	26434	-53426
Wind angle: 0°	150C1F3	6390	26203	53285	6390	26203	-53285
	380C2F1	12781	53245	107104	12781	53245	-107104
	380C2F2	12781	52868	106853	12781	52868	-106853
	380C2F3	12781	52405	106571	12781	52405	-106571
	RTG	0	0	0	3464	14212	-28857
NL3/1b	GW / opgw	1734	7898	16549	1734	7898	-16549
Wind, -20°C	150C1F1	6387	29501	62176	6387	29501	-62176
Permanent loads yg= 0.9	150C1F2	6387	29460	62173	6387	29460	-62173
Wind angle: 0°	150C1F3	6387	29408	62172	6387	29408	-62172
	380C2F1	12774	59002	124352	12774	59002	-124352
	380C2F2	12774	58919	124347	12774	58919	-124347
	380C2F3	12774	58816	124344	12774	58816	-124344
	RTG	0	0	0	3463	15483	-32705

NL3/3	GW / opgw	3304	13004	25894	3304	13004	-25894
Wind, -5°C	150C1F1	7769	32583	66833	7769	32583	-66833
Permanent loads yg= 0.9	150C1F2	7769	32443	66770	7769	32443	-66770
Wind angle: 0°	150C1F3	7769	32268	66702	7769	32268	-66702
	380C2F1	15538	65167	133667	15538	65167	-133667
	380C2F2	15538	64885	133541	15538	64885	-133541
	380C2F3	15538	64537	133405	15538	64537	-133405
	RTG	0	0	0	6610	25061	-51190
NL3/4	GW / opgw	2336	8913	18725	2336	8913	-18725
Construction/maintenance, +5°C	150C1F1	7593	29581	62346	7593	29581	-62346
Permanent loads yg= 0.9	150C1F2	7593	29541	62348	7593	29541	-62348
Wind angle: 0°	150C1F3	7593	29492	62351	7593	29492	-62351
	380C2F1	15186	59161	124693	15186	59161	-124693
	380C2F2	15186	59082	124695	15186	59082	-124695
	380C2F3	15186	58984	124702	15186	58984	-124702
	RTG	0	0	0	4667	17663	-37380
NL3/1a	GW / opgw	1735	7127	14457	1735	13344	-22377
Wind, 10°C	150C1F1	6390	25843	53102	6393	41605	-71713
Permanent loads yg= 0.9	150C1F2	6390	25737	53057	6392	39839	-69303
Wind angle: 45°	150C1F3	6390	25607	53010	6392	37633	-66331
	380C2F1	12781	51686	106203	12785	83209	-143427
	380C2F2	12781	51475	106115	12785	79677	-138605
	380C2F3	12781	51213	106020	12784	75266	-132662
	RTG	0	0	0	3465	20757	-36495
NL3/1b	GW / opgw	1734	7831	16541	1734	9072	-17537
Wind, -20°C	150C1F1	6387	29325	62175	6387	32408	-64118
Permanent loads yg= 0.9	150C1F2	6387	29300	62177	6387	32054	-63780
Wind angle: 45°	150C1F3	6387	29268	62181	6387	31621	-63392
	380C2F1	12774	58650	124349	12774	64817	-128235
	380C2F2	12774	58600	124354	12774	64107	-127560
	380C2F3	12774	58537	124361	12774	63242	-126784
	RTG	0	0	0	3463	16742	-33438
NL3/3	GW / opgw	3304	12574	25660	3306	20937	-35040
Wind, -5°C	150C1F1	7769	31994	66620	7771	43648	-78562
Permanent loads yg= 0.9	150C1F2	7769	31913	66602	7771	42300	-76853
Wind angle: 45°	150C1F3	7769	31812	66585	7770	40637	-74797
	380C2F1	15538	63989	133240	15542	87296	-157124
	380C2F2	15538	63826	133204	15541	84600	-153707
	380C2F3	15538	63624	133170	15541	81274	-149593
	RTG	0	0	0	6612	33762	-59771
NL3/4	GW / opgw	2336	8851	18727	2336	9895	-19301
Construction/maintenance, +5°C	150C1F1	7593	29412	62361	7593	32206	-63680
Permanent loads yg= 0.9	150C1F2	7593	29388	62365	7593	31893	-63432
Wind angle: 45°	150C1F3	7593	29357	62371	7593	31509	-63151
	380C2F1	15186	58824	124722	15187	64412	-127360
	380C2F2	15186	58776	124730	15187	63786	-126864
	380C2F3	15186	58714	124742	15186	63019	-126301
	RTG	0	0	0	4667	18753	-37748
NL3/1a	GW / opgw	1735	12751	21541	1735	12751	-21541
Wind, 10°C	150C1F1	6392	40035	69569	6392	40035	-69569
Permanent loads yg= 0.9	150C1F2	6392	38418	67383	6392	38418	-67383
Wind angle: 90°	150C1F3	6392	36405	64701	6392	36405	-64701
	380C2F1	12785	80070	139139	12785	80070	-139139
	380C2F2	12784	76836	134766	12784	76836	-134766
	380C2F3	12784	72810	129403	12784	72810	-129403
	RTG	0	0	0	3465	20054	-35547
NL3/1b	GW / opgw	1734	8943	17393	1734	8943	-17393
Wind, -20°C	150C1F1	6387	32093	63816	6387	32093	-63816
Permanent loads yg= 0.9	150C1F2	6387	31774	63526	6387	31774	-63526
Wind angle: 90°	150C1F3	6387	31384	63193	6387	31384	-63193
	380C2F1	12774	64186	127633	12774	64186	-127633
	380C2F2	12774	63547	127051	12774	63547	-127051
	380C2F3	12774	62768	126386	12774	62768	-126386
	RTG	0	0	0	3463	16607	-33320
NL3/3	GW / opgw	3306	20126	33990	3306	20126	-33990
Wind, -5°C	150C1F1	7771	42449	77041	7771	42449	-77041
Permanent loads yg= 0.9	150C1F2	7771	41226	75518	7771	41226	-75518
Wind angle: 90°	150C1F3	7770	39721	73694	7770	39721	-73694
	380C2F1	15541	84898	154082	15541	84898	-154082
	380C2F2	15541	82452	151036	15541	82452	-151036
	380C2F3	15541	79441	147388	15541	79441	-147388
	RTG	0	0	0	6612	32826	-58647

NL3/4	GW / opgw	2336	9790	19209	2336	9790	-19209
Construction/maintenance, +5°C	150C1F1	7593	31927	63459	7593	31927	-63459
Permanent loads yg= 0.9	150C1F2	7593	31645	63247	7593	31645	-63247
Wind angle: 90°	150C1F3	7593	31299	63008	7593	31299	-63008
	380C2F1	15187	63855	126917	15187	63855	-126917
	380C2F2	15186	63290	126494	15186	63290	-126494
	380C2F3	15186	62598	126016	15186	62598	-126016
	RTG	0	0	0	4667	18640	-37679
NL3/1a	GW / opgw	1735	13344	22377	1735	7127	-14457
Wind, 10°C	150C1F1	6393	41605	71713	6390	25843	-53102
Permanent loads yg= 0.9	150C1F2	6392	39839	69303	6390	25737	-53057
Wind angle: -45°	150C1F3	6392	37633	66331	6390	25607	-53010
	380C2F1	12785	83209	143427	12781	51686	-106203
	380C2F2	12785	79677	138605	12781	51475	-106115
	380C2F3	12784	75266	132662	12781	51213	-106020
	RTG	0	0	0	3464	13874	-28690
NL3/1b	GW / opgw	1734	9072	17537	1734	7831	-16541
Wind, -20°C	150C1F1	6387	32408	64118	6387	29325	-62175
Permanent loads yg= 0.9	150C1F2	6387	32054	63780	6387	29300	-62177
Wind angle: -45°	150C1F3	6387	31621	63392	6387	29268	-62181
	380C2F1	12774	64817	128235	12774	58650	-124349
	380C2F2	12774	64107	127560	12774	58600	-124354
	380C2F3	12774	63242	126784	12774	58537	-124361
	RTG	0	0	0	3463	15405	-32709
NL3/3	GW / opgw	3306	20937	35040	3304	12574	-25660
Wind, -5°C	150C1F1	7771	43648	78562	7769	31994	-66620
Permanent loads yg= 0.9	150C1F2	7771	42300	76853	7769	31913	-66602
Wind angle: -45°	150C1F3	7770	40637	74797	7769	31812	-66585
	380C2F1	15542	87296	157124	15538	63989	-133240
	380C2F2	15541	84600	153707	15538	63826	-133204
	380C2F3	15541	81274	149593	15538	63624	-133170
	RTG	0	0	0	6610	24584	-51049
NL3/4	GW / opgw	2336	9895	19301	2336	8851	-18727
Construction/maintenance, +5°C	150C1F1	7593	32206	63680	7593	29412	-62361
Permanent loads yg= 0.9	150C1F2	7593	31893	63432	7593	29388	-62365
Wind angle: -45°	150C1F3	7593	31509	63151	7593	29357	-62371
	380C2F1	15187	64412	127360	15186	58824	-124722
	380C2F2	15187	63786	126864	15186	58776	-124730
	380C2F3	15186	63019	126301	15186	58714	-124742
	RTG	0	0	0	4667	17589	-37393

ZWW4HL400

Loadcases for tower strength (serviceability limit state)

		Ahead			Back		
Loadcase according to 50341-3-15	Att. Point	Vertical [N]	Transversal [N]	Longitudinal [N]	Vertical [N]	Transversal [N]	Longitudinal [N]
NL4/1a	GW / opgw	1928	8306	16195	1928	8306	-16195
Wind, 10°C	150C1F1	7101	29479	58680	7101	29479	-58680
Permanent loads yg= 1.0	150C1F2	7101	29226	58493	7101	29226	-58493
Wind angle: 0°	150C1F3	7101	28916	58283	7101	28916	-58283
	380C2F1	14202	58959	117360	14202	58959	-117360
	380C2F2	14202	58452	116987	14202	58452	-116987
	380C2F3	14202	57831	116566	14202	57831	-116566
	RTG	0	0	0	3850	15722	-31636
NL4/1b	GW / opgw	1927	8520	17947	1927	8520	-17947
Wind, -20°C	150C1F1	7097	31774	67232	7097	31774	-67232
Permanent loads yg= 1.0	150C1F2	7097	31741	67233	7097	31741	-67233
Wind angle: 0°	150C1F3	7097	31701	67237	7097	31701	-67237
	380C2F1	14194	63548	134463	14194	63548	-134463
	380C2F2	14194	63483	134467	14194	63483	-134467
	380C2F3	14194	63401	134474	14194	63401	-134474
	RTG	0	0	0	3848	16754	-35514
NL4/3	GW / opgw	6603	20876	43107	6603	20876	-43107
Wind, -5°C	150C1F1	11209	42315	88209	11209	42315	-88209
Permanent loads yg= 1.0	150C1F2	11209	42217	88199	11209	42217	-88199
Wind angle: 0°	150C1F3	11209	42095	88191	11209	42095	-88191
	380C2F1	22419	84630	176418	22419	84630	-176418
	380C2F2	22419	84434	176397	22419	84434	-176397
	380C2F3	22419	84190	176381	22419	84190	-176381
	RTG	0	0	0	13222	41211	-86246
NL4/4	GW / opgw	2429	9162	19325	2429	9162	-19325
Construction/maintenance, +5°C	150C1F1	8103	31052	65684	8103	31052	-65684
Permanent loads yg= 1.0	150C1F2	8103	31021	65688	8103	31021	-65688
Wind angle: 0°	150C1F3	8103	30981	65694	8103	30981	-65694
	380C2F1	16206	62105	131368	16206	62105	-131368
	380C2F2	16206	62042	131376	16206	62042	-131376
	380C2F3	16206	61962	131388	16206	61962	-131388
	RTG	0	0	0	4852	18187	-38586
NL4/1a	GW / opgw	1928	7884	15849	1929	16004	-26320
Wind, 10°C	150C1F1	7101	28434	58005	7104	49235	-83134
Permanent loads yg= 1.0	150C1F2	7101	28294	57937	7104	46962	-80026
Wind angle: 45°	150C1F3	7101	28120	57862	7103	44106	-76156
	380C2F1	14202	56868	116009	14209	98470	-166268
	380C2F2	14202	56587	115873	14208	93925	-160053
	380C2F3	14202	56239	115724	14207	88213	-152312
	RTG	0	0	0	3851	24427	-42102
NL4/1b	GW / opgw	1927	8468	17947	1927	9375	-18505
Wind, -20°C	150C1F1	7097	31634	67246	7097	33921	-68259
Permanent loads yg= 1.0	150C1F2	7097	31614	67250	7097	33666	-68064
Wind angle: 45°	150C1F3	7097	31589	67255	7097	33354	-67844
	380C2F1	14194	63269	134492	14195	67843	-136518
	380C2F2	14194	63229	134500	14195	67333	-136129
	380C2F3	14194	63178	134510	14195	66707	-135689
	RTG	0	0	0	3848	17692	-35886
NL4/3	GW / opgw	6603	20608	43106	6604	25204	-45830
Wind, -5°C	150C1F1	11209	41899	88191	11210	49269	-93121
Permanent loads yg= 1.0	150C1F2	11209	41839	88194	11210	48425	-92296
Wind angle: 45°	150C1F3	11209	41765	88201	11210	47392	-91339
	380C2F1	22419	83797	176382	22421	98539	-186241
	380C2F2	22419	83679	176389	22421	96850	-184592
	380C2F3	22419	83529	176402	22420	94784	-182677
	RTG	0	0	0	13223	45998	-88109
NL4/4	GW / opgw	2429	9113	19331	2429	9916	-19666
Construction/maintenance, +5°C	150C1F1	8103	30917	65707	8103	33057	-66402
Permanent loads yg= 1.0	150C1F2	8103	30897	65711	8103	32823	-66255
Wind angle: 45°	150C1F3	8103	30872	65717	8103	32536	-66089
	380C2F1	16206	61833	131413	16207	66114	-132805
	380C2F2	16206	61794	131422	16207	65647	-132509
	380C2F3	16206	61744	131435	16207	65073	-132179
	RTG	0	0	0	4852	19038	-38772
NL4/1a	GW / opgw	1929	15253	25268	1929	15253	-25268
Wind, 10°C	150C1F1	7104	47216	80372	7104	47216	-80372
Permanent loads yg= 1.0	150C1F2	7104	45125	77532	7104	45125	-77532
Wind angle: 90°	150C1F3	7103	42507	74012	7103	42507	-74012
	380C2F1	14208	94431	160743	14208	94431	-160743
	380C2F2	14207	90251	155063	14207	90251	-155063
	380C2F3	14206	85013	148024	14206	85013	-148024
	RTG	0	0	0	3851	23511	-40855

NL4/1b	GW / opgw	1927	9282	18418	1927	9282	-18418
Wind, -20°C	150C1F1	7097	33694	68085	7097	33694	-68085
Permanent loads yg= 1.0	150C1F2	7097	33464	67920	7097	33464	-67920
Wind angle: 90°	150C1F3	7097	33182	67733	7097	33182	-67733
	380C2F1	14195	67389	136171	14195	67389	-136171
	380C2F2	14195	66929	135839	14195	66929	-135839
	380C2F3	14195	66364	135466	14195	66364	-135466
	RTG	0	0	0	3848	17594	-35820
NL4/3	GW / opgw	6604	24745	45420	6604	24745	-45420
Wind, -5°C	150C1F1	11210	48518	92385	11210	48518	-92385
Permanent loads yg= 1.0	150C1F2	11210	47757	91670	11210	47757	-91670
Wind angle: 90°	150C1F3	11210	46826	90842	11210	46826	-90842
	380C2F1	22421	97037	184770	22421	97037	-184770
	380C2F2	22420	95514	183340	22420	95514	-183340
	380C2F3	22420	93651	181685	22420	93651	-181685
	RTG	0	0	0	13223	45502	-87781
NL4/4	GW / opgw	2429	9837	19608	2429	9837	-19608
Construction/maintenance, +5°C	150C1F1	8103	32849	66270	8103	32849	-66270
Permanent loads yg= 1.0	150C1F2	8103	32638	66146	8103	32638	-66146
Wind angle: 90°	150C1F3	8103	32378	66007	8103	32378	-66007
	380C2F1	16207	65698	132541	16207	65698	-132541
	380C2F2	16207	65276	132291	16207	65276	-132291
	380C2F3	16206	64756	132015	16206	64756	-132015
	RTG	0	0	0	4852	18952	-38731
NL4/1a	GW / opgw	1929	16004	26320	1928	7884	-15849
Wind, 10°C	150C1F1	7104	49235	83134	7101	28434	-58005
Permanent loads yg= 1.0	150C1F2	7104	46962	80026	7101	28294	-57937
Wind angle: -45°	150C1F3	7103	44106	76156	7101	28120	-57862
	380C2F1	14209	98470	166268	14202	56868	-116009
	380C2F2	14208	93925	160053	14202	56587	-115873
	380C2F3	14207	88213	152312	14202	56239	-115724
	RTG	0	0	0	3850	15269	-31383
NL4/1b	GW / opgw	1927	9375	18505	1927	8468	-17947
Wind, -20°C	150C1F1	7097	33921	68259	7097	31634	-67246
Permanent loads yg= 1.0	150C1F2	7097	33666	68064	7097	31614	-67250
Wind angle: -45°	150C1F3	7097	33354	67844	7097	31589	-67255
	380C2F1	14195	67843	136518	14194	63269	-134492
	380C2F2	14195	67333	136129	14194	63229	-134500
	380C2F3	14195	66707	135689	14194	63178	-134510
	RTG	0	0	0	3848	16692	-35523
NL4/3	GW / opgw	6604	25204	45830	6603	20608	-43106
Wind, -5°C	150C1F1	11210	49269	93121	11209	41899	-88191
Permanent loads yg= 1.0	150C1F2	11210	48425	92296	11209	41839	-88194
Wind angle: -45°	150C1F3	11210	47392	91339	11209	41765	-88201
	380C2F1	22421	98539	186241	22419	83797	-176382
	380C2F2	22421	96850	184592	22419	83679	-176389
	380C2F3	22420	94784	182677	22419	83529	-176402
	RTG	0	0	0	13222	40890	-86293
NL4/4	GW / opgw	2429	9916	19666	2429	9113	-19331
Construction/maintenance, +5°C	150C1F1	8103	33057	66402	8103	30917	-65707
Permanent loads yg= 1.0	150C1F2	8103	32823	66255	8103	30897	-65711
Wind angle: -45°	150C1F3	8103	32536	66089	8103	30872	-65717
	380C2F1	16207	66114	132805	16206	61833	-131413
	380C2F2	16207	65647	132509	16206	61794	-131422
	380C2F3	16207	65073	132179	16206	61744	-131435
	RTG	0	0	0	4852	18126	-38600

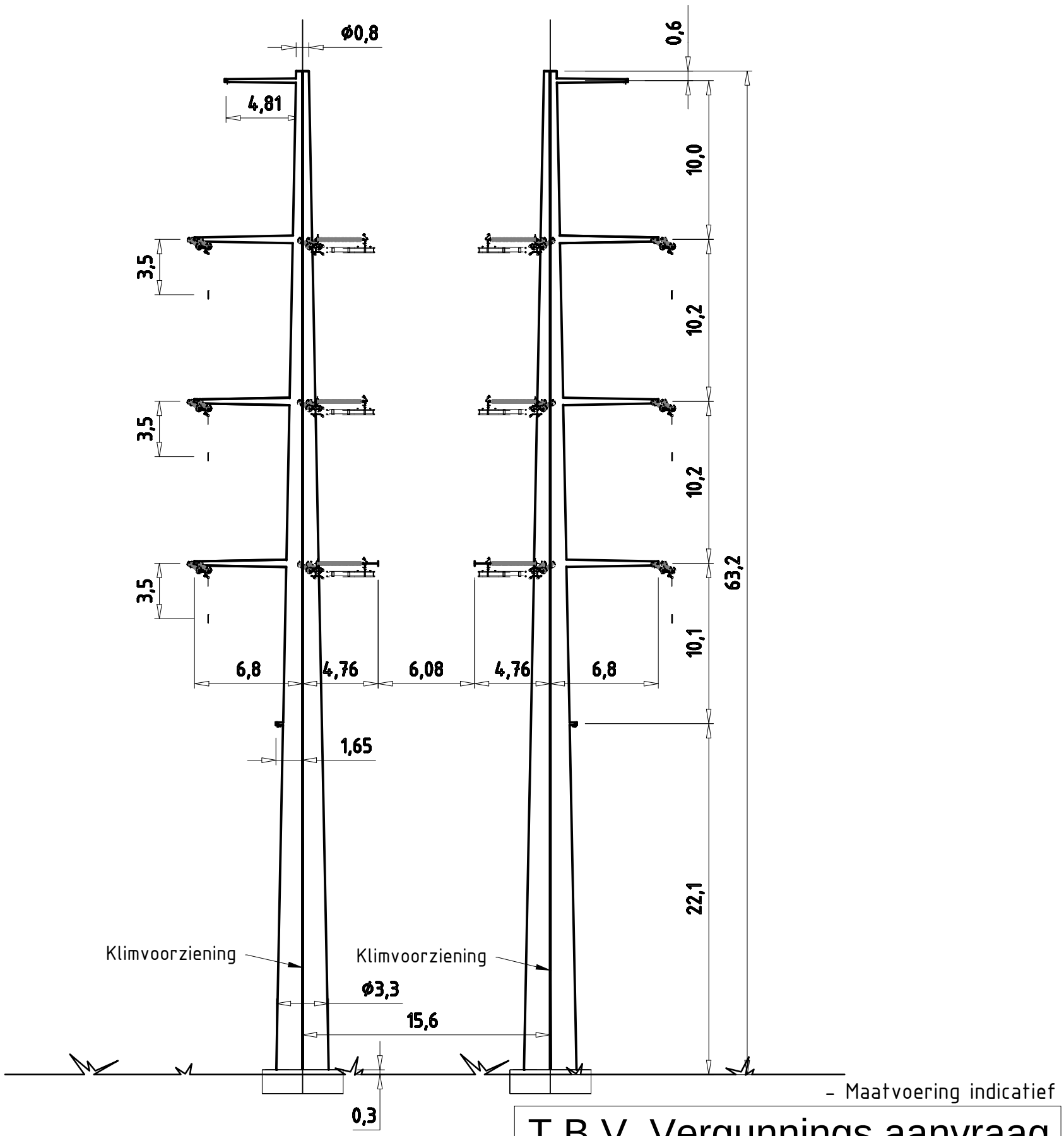

- Maatvoering indicatief

T.B.V. Vergunnings aanvraag

Wintrack
Masttype: ZWW4HL400

- Trekparameter 1800m
- 2x380 / 2x150 Hoekmast
- 400m Veldlengte
- 130°-150° Lijnhoek
- Uitvoering Staal of Beton
- Kleurstelling hoofdelement:
  Ral 9018 Papyrus white
- Kleurstelling Appendages:
  Ral 7021 Black grey

5.0	05-03-2014	Modified top/botom diameter and increased traverse length
4.0	03-02-2014	Modified top/botom diameter
3.0	11-03-2013	Small modification

KEMA DNV

Projectname: Engineering verbinding ZW380

Third angle projection:

Drawing no.: 74102194-035-094V

Design state: Definitief		Scale: 1:300	
Drawn by: RBE	05-03-2014	Units: m	
Checked by: AJP	05-03-2014	Project no: 000.145	
Approved by: AW	05-03-2014	Company: TenneT	

Description: Wintrack Masttype ZWW4HL400

Revision: 5.0

Format: A3

DNV KEMA Energy & Sustainability, Utrechtseweg 310, 6812 AR Arnhem, tel: +31 26 3 56 91 11, www.dnvkema.com

© 2014 - Filename: 74102194-035-094 - ZWW4HL400 Rev5.0.dwg

ZWW4HM400+5

Fundatie berekening

Bijlage CL

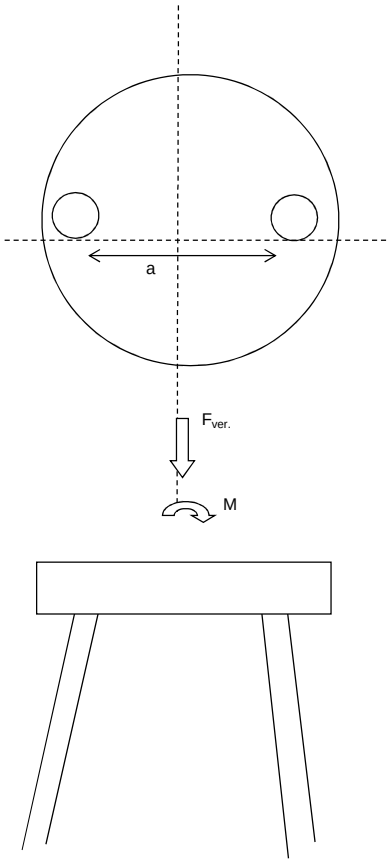

Fundatie ontwerp:
Heipaal

Afmetingen	b	400	mm
	d	400	mm
omtrek paal	$O_{p;gem}$	1,6	m
schoorstand		8	:1
α		7,125	graden
Opstort	Diameter	5,5	m
	Hoogte	1,8	m
	Inhoud	42,8	m^3
	e.g.	1026	kN
Onderplaat	Diameter	14,0	m
	Hoogte	1,4	m
	Inhoud	216	m^3
	e.g.	5172	kN
Hart paal tov rand fund.		0,6	m

Optreden krachten

e.g. mast	1199	kN
Fgeleiders	329	kN
Maximale dwarskracht	1500	kN
Fmax vert (druk)	1768	kN
Fmin vert (trek)	1326	kN
Maximale moment	75789	kNm

Moment

F_{diag}	6345	kN	
F_{hor}	1500	kN	
F_{ver}	6296	kN	
Mhor (tgv Fhor)	4800	kNm	
M_{tot}	80589	kNm	reductie door opwaarste kracht water
F=M/a	6296	kN	

Verticaal reactiekracht

Fwater (trek)	2583	kN	
Fgrond (druk)	3515	kN	
Fgrond (trek)	2929	kN	
Fdmax (druk)	6712	kN	
Ftmax (trek)	3221	kN	
Fdtot (druk)	13008	kN	
Fttot (trek)	3075	kN	
Palen druk	12	(-)	
Palen trek	10	(-)	
Totaal palen	24	(-)	Per fundering

ZWW4HM400+5

TREKPALEN volgens CUR 2001-4 par. 8.

$$F_{r;trek;d} = \int_0^L O_{p;gem} \times p_{r;z;d} \times dz$$

Bijlage CL

Bepaling opneembare paalbelasting op druk

heipaal

Afmeting paal	b	0,40	m
	b	0,40	m
omtrek paal	$O_{p;gem}$	1,60	m
paalfactor	α t	0,007	
aantal palen	M	1	
aantal sonderingen	N	1	
factor invloed aantal sonderingen	ξ	0,75	
conusweerstand over wrijvingstraject	$q_{c;z;max}$	15	MPa
	$q_{c;z;rep}$	11,25	MPa
materiaalfactor	$\gamma_{m;b4}$	1,4	
factor, wisselende belastingen	$\gamma_{m;var;qc}$	1,5	
	$q_{c;z;d}$	5,36	MPa
	$p_{r;z;d}$	37,5	kN/m²
	$F_{r;trek;d;i}$	60,0	kN/m⊥
	$F_{trek,d}$	596	kN/m

Bepaling opneembare trekbelasting paal

sondering	diepte		$q_{c;z}$		$P_{r;max;schacht;i}$	$F_{r;trek;d;i}$	$F_{trek,d}$
	m	m	MPa	α t	kPa	kN	kN
	0	-1	0	0,007	0,00	0,00	0
	-1	-2	0	0,007	0,00	0,00	0
	-2	-3	0	0,007	0,00	0,00	0
	-3	-4	0	0,007	0,00	0,00	0
	-4	-5	0	0,007	0,00	0,00	0
	-5	-6	0	0,007	0,00	0,00	0
	-6	-7	0	0,007	0,00	0,00	0
	-7	-8	0	0,007	0,00	0,00	0
	-8	-9	1	0,007	2,50	4,00	4
	-9	-10	3	0,007	7,50	12,00	16
	-10	-11	2	0,007	5,00	8,00	24
	-11	-12	0	0,007	0,00	0,00	24
	-12	-13	3	0,007	7,50	12,00	36
	-13	-14	2	0,007	5,00	8,00	44
	-14	-15	4	0,007	10,00	16,00	60
	-15	-16	10	0,007	25,00	40,00	100
	-16	-17	9	0,007	22,50	36,00	136
	-17	-18	8	0,007	20,00	32,00	168
	-18	-19	12	0,007	30,00	48,00	216
	-19	-20	12	0,007	30,00	48,00	264
	-20	-21	10	0,007	25,00	40,00	304
	-21	-22	11	0,007	27,50	44,00	348
	-22	-23	11	0,007	27,50	44,00	392
	-23	-24	12	0,007	30,00	48,00	440
	-24	-25	12	0,007	30,00	48,00	488
	-25	-26	12	0,007	30,00	48,00	536
	-26	-27	15	0,007	37,50	60,00	596

$F_{trek,d}$	596	kN	paalafmeting	400	mm, paalpuntnivo	-27,00	m

Paalgroep factor	10%	
$F_{trek,d}$	**536,4**	kN

ZWW4HM400+5

DRUKPALEN

FUNDERINGSCONSTRUCTIE
Toelaatbare paalbelastingen

Bijlage CL

Bepaling opneembare paalbelasting op druk

heipaal			v		
		diameter	a	2	mm
				2	mm
		Deq		0,001808	

maximale puntweerstand

$P_{r;max;punt;i}$		11,25	MN/m²
paalklasse factor	α_p	1,00	
factor paalvoet	β	1	
hoek van inwendige vrijwing van paalvoet	ϕ	40	
factor dwarsdoorsnede paalvoet	s	1,00	
minimale waarde neergaande deel	$q_{c;II;gem}$	9,00	MN/m²
gem. sondeerwaarde neergaande deel	$q_{c;I;gem}$	14,00	MN/m₂
gem. sondeerwaarde opgaande deel	$q_{c;III;gem}$	11,00	MN/m²

maximale paalschachtwrijving

$P_{r;max;schacht;i}$		0,05	MN/m²

waarin:

paalfactor	α_s	0,010	
conusweerstand over wrijvingstraject	$q_{c;z;a}$	5,00	MN/m²

maximale draagkracht alleenstaande paal

$\mathbf{F_{r;max;i}}$		0,00	MN

waarin:

$\mathbf{F_{r;max;punt;i}}$		0,00	MN
paalpunt oppervlak	A_{punt}	0,00	m^2
$\mathbf{F_{r;max;schacht;i}}$		0,00	MN
gemiddelde paalomtrek	$O_{p;gem}$	0,01	m
lengte schachtwrijving	Δl	15,00	m

Bepaling rekenwaarde van de maximale draagkracht

$F_{r;paal;max;d}$	MN	0,00	MN
materiaalfactor grond	$\gamma_{m;b}$	1,20	
waarde afhankelijk van aantal palen en aantal sonderingen	$\xi_{1;N}$	0,75	

$F_{r;paal;max;d}$	3	kN	mm, paalpuntnivo	-27,00 m

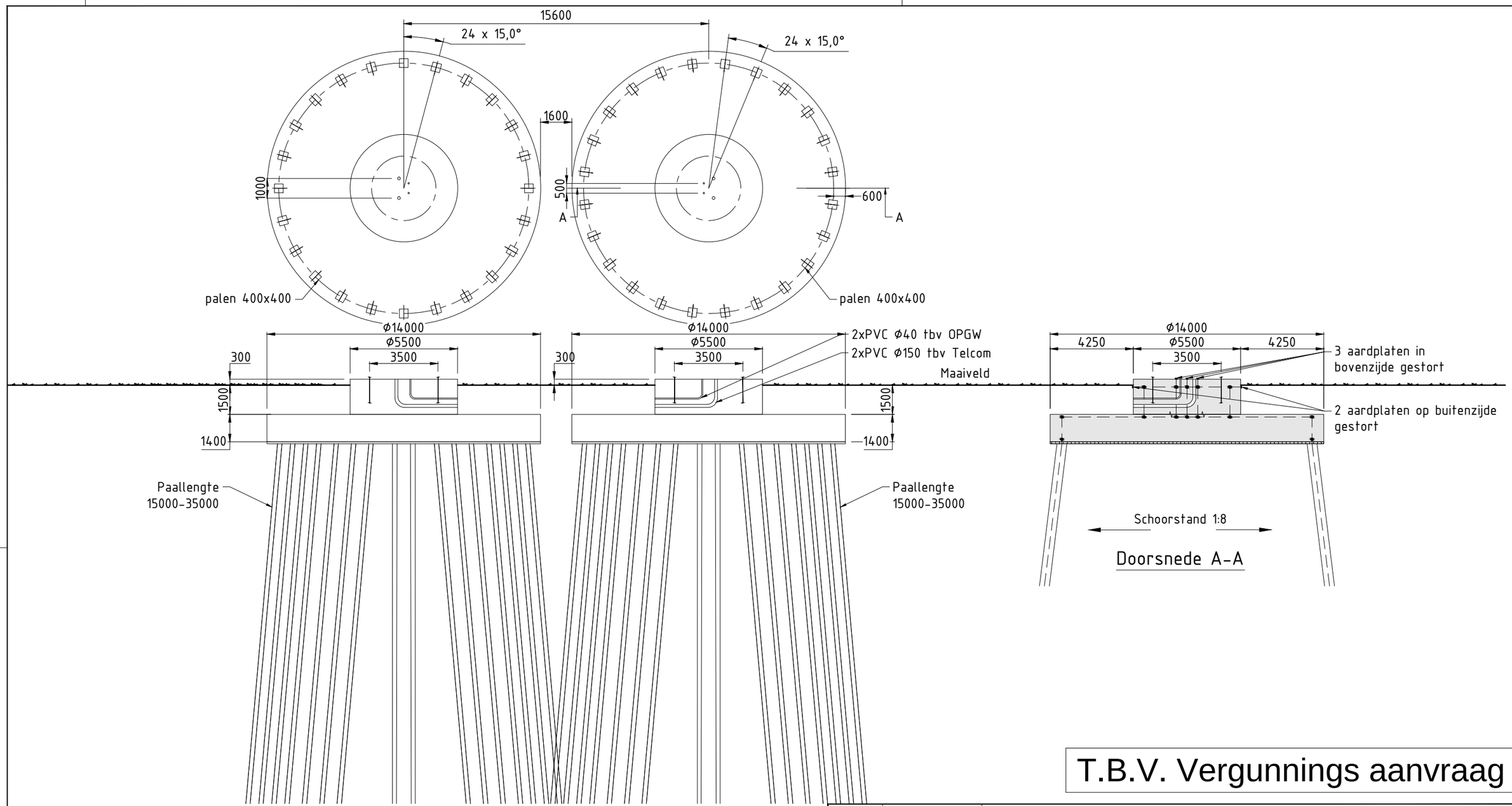

T.B.V. Vergunnings aanvraag

6.0	12-03-2014	Diverse aanpassingen
5.0	26-07-2013	Diverse aanpassingen
4.0	13-06-2013	Fundering tekst toegevoegd

Verklaring

Gewapend beton

Werkvloer

Verklaring aarding

Ringleiding Ø16mm (FeB220) glad

Koppeling met aardstaaf in paal

Aardplaten

Opmerkingen

Maten in mm
Coordinaten in mm, in het stelsel van de rijksdriehoekmeting
Maatvoering in het 360 graden stelsel
Vellingkanten niet getekend
Ringleiding in bovenkant poer op het bovennet plaatsen in de eerste laag
Mastvoetanker afmeting exclusief mastvoetflens breedte
Afmetingen indicatief

Projectname:
Engineering verbniding ZW380

Third angle projection:

Drawing no.:
74102194-032-096V

Design state: Definitief		Scale:	1:200
Drawn by:	RBE	12-03-2014	Units: mm
Checked by:	AJP	12-03-2014	Project no: 000.145
Approved by:	AW	12-03-2014	Company: TenneT

Description:
Principe ontwerp fundatie hoekmast ZWW4HM400+5 masten familie

Revision: 6.0

Format: A3

DNV KEMA Energy & Sustainability, Utrechtseweg 310, 6812 AR Arnhem, tel: +31 26 3 56 91 11, www.dnvkema.com

© 2013 - Filename: 74102194-032-096 - ZWW4HM400+5 Principe ontwerp fundaties_rev6.0.dwg

ZWW4HM400+5

Bijlage BL

Location dependent data to obtain pressures

Wind area			2	
Terrain catagory	O=onbebouwd, B=bebouwd		O	
Hoogte		h	68.2	m
Diameter voet		d voet	3.5	m
top		d top	0.8	m
gem		d gem	2.2	m
wanddikte		t	32	mm
Oppervlakte aan voet		A	348641	mm^2
Traagheidsmoment aan voet		W_x	3.00E+08	mm^3
Weerstandsmoment aan voet		I_x	5.18E+11	mm^4
		2de orde	10.0	%
Mast: Gewicht		$F_{rep;ver}$	1130	kN

Ultimate limit state

	hoogte	F_{ver}	$F_{loodrecht}$	$F_{//}$	$F_{Samengesteld}$			
	m	kN	kN	kN	kN			
GW / opgw	67.6	20.0	74.0	0.0	74.0	3153	kNm	68.2
150C1F1	57.6	32.0	140.5	0.0	140.5	6207	kNm	
150C1F2	47.4	32.1	138.4	0.0	138.4	5015	kNm	
150C1F3	37.2	32.1	135.8	0.0	135.8	3848	kNm	
380C2F1	57.6	64.1	280.9	0.0	280.9	12413	kNm	
380C2F2	47.4	64.2	276.7	0.0	276.7	10029	kNm	
380C2F3	37.2	64.3	271.6	0.0	271.6	7695	kNm	
RTG	27.1	20.1	69.0	-107.4	127.6	1963	kNm	

Stuwdruk	$F_{hor.}$	43.2	kN
	$M_{d;wind}$	1316	kNm
Totaal	$M_{d;tot}$	68899	kNm
Totaal moment incl. 2de orde effect	$M_{d;tot}$	75789	kNm

Normaalkracht;

Optredende normaalkracht

$N_{d;geleiders}$		329	kN
$N_{d;\ e.g.\ mast}$		1356	kN
$N_{s;d;totaal}$		1685	kN

Is buis plooigevoelig tgv normaalkracht: conform NEN-EN 50341 par. 7.4.5.4 — JA

	ρ_a	0.68	
	A_{eff}	237528	mm^2

Optredende spanning tgv normaalkracht

$N_{sd}/A_{eff} = f_{yd}/y_{m1}$ — 7 N/mm^2

Moment;

Optredende moment in de voet:

$M_{d;tot}$ — 75789 kNm

Is buis plooigevoelig tgv momentkracht: conform NEN-EN 50341 par. 7.4.5.4 — JA

	ρ_a	0.98	
	W_{eff}	2.94E+08	mm^3

Optredende spaning tgv moment:

$M_d/W_{eff} = f_{yd}/y_{m1}$ — 258 N/mm^2

Totale spanning:

	σ_d	265	N/mm^2	< 284 N/mm^2 = ACCOORD
	$\sigma_{d;toegestaan}$	284	N/mm^2	==> 80% van 355 N/mm^2

Special limit state

	hoogte	F_{ver}	$F_{loodrecht}$	$F_{//}$	$F_{Samengesteld}$		
	m	kN	kN	kN	kN		
GW / opgw	67.6	14.3	56.3	0.0	56.3	3804	kNm
150C1F1	57.6	24.6	111.3	0.0	111.3	6409	kNm
150C1F2	47.4	24.7	109.9	0.0	109.9	5209	kNm
150C1F3	37.2	24.7	108.2	0.0	108.2	4026	kNm
380C2F1	57.6	49.3	222.6	0.0	222.6	12819	kNm
380C2F2	47.4	49.4	219.8	0.0	219.8	10418	kNm
380C2F3	37.2	49.4	216.5	0.0	216.5	8052	kNm
RTG	27.1	14.4	52.8	-83.4	98.7	2673	kNm

Stuwdruk	$F_{hor.}$	348	kN		
Verplaating		1.37	m	3.72	EIS TENNET VISUEE
Percentage van de verplaatsing		2.01%		5.5%	NEN-EN-50341
Hoek		2.18	graden		
Kromming		0.47%		1%	NEN-EN-50341
Fundatie rotatiestijfheid		0.005	rad		

ZWW4HM400+5

Loadcases for tower strength (ultimate limit state)

		Ahead			Back		
Loadcase according to 50341-3-15	Att. Point	Vertical [N]	Transversal [N]	Longitudinal [N]	Vertical [N]	Transversal [N]	Longitudinal [N]
NL1/1a	GW / opgw	2522	12798	19257	2522	12798	-19257
Wind, 10°C	150C1F1	9344	43749	67582	9344	43749	-67582
Permanent loads yg= 1.2	150C1F2	9357	43055	66984	9357	43055	-66984
Wind angle: 0°	150C1F3	9373	42220	66297	9373	42220	-66297
	380C2F1	18688	87497	135163	18688	87497	-135163
	380C2F2	18715	86110	133968	18715	86110	-133968
	380C2F3	18747	84439	132594	18747	84439	-132594
	RTG	0	0	0	5079	23213	-36300
NL1/1b	GW / opgw	2596	11722	19722	2596	11722	-19722
Wind, -20°C	150C1F1	9578	43336	73423	9578	43336	-73423
Permanent loads yg= 1.2	150C1F2	9579	43264	73418	9579	43264	-73418
Wind angle: 0°	150C1F3	9580	43175	73415	9580	43175	-73415
	380C2F1	19156	86673	146846	19156	86673	-146846
	380C2F2	19158	86527	146836	19158	86527	-146836
	380C2F3	19160	86349	146831	19160	86349	-146831
	RTG	0	0	0	5183	22990	-39039
NL1/3	GW / opgw	10094	32295	52944	10094	32295	-52944
Wind, -5°C	150C1F1	16168	62245	103234	16168	62245	-103234
Permanent loads yg= 1.2	150C1F2	16171	62023	103187	16171	62023	-103187
Wind angle: 0°	150C1F3	16174	61752	103142	16174	61752	-103142
	380C2F1	32335	124490	206468	32335	124490	-206468
	380C2F2	32341	124047	206375	32341	124047	-206375
	380C2F3	32348	123504	206285	32348	123504	-206285
	RTG	0	0	0	20228	63498	-105976
NL1/4	GW / opgw	3387	13173	22234	3387	13173	-22234
Construction/maintenance, +5°C	150C1F1	11102	43786	74201	11102	43786	-74201
Permanent loads yg= 1.2	150C1F2	11102	43718	74204	11102	43718	-74204
Wind angle: 0°	150C1F3	11103	43634	74210	11103	43634	-74210
	380C2F1	22203	87573	148403	22203	87573	-148403
	380C2F2	22205	87436	148408	22205	87436	-148408
	380C2F3	22206	87268	148420	22206	87268	-148420
	RTG	0	0	0	6769	26093	-44413
NL1/6	GW / opgw	2881	11089	19206	2881	11089	-19206
Permanent, +10°C	150C1F1	10610	40649	70406	10610	40649	-70406
Permanent loads yg= 1.35	150C1F2	10610	40649	70406	10610	40649	-70406
	150C1F3	10610	40649	70406	10610	40649	-70406
	380C2F1	21221	81297	140811	21221	81297	-140811
	380C2F2	21221	81297	140811	21221	81297	-140811
	380C2F3	21221	81297	140811	21221	81297	-140811
	RTG	0	0	0	5755	22157	-38377
NL1/1a	GW / opgw	2562	10523	17447	2398	25868	-33934
Wind, 10°C	150C1F1	9443	38178	63931	8918	78287	-104997
Permanent loads yg= 1.2	150C1F2	9444	38073	63911	8945	74516	-100725
Wind angle: 45°	150C1F3	9445	37945	63893	8985	69789	-95377
	380C2F1	18885	76356	127862	17835	156573	-209994
	380C2F2	18888	76146	127823	17891	149033	-201450
	380C2F3	18891	75890	127786	17970	139578	-190754
	RTG	0	0	0	4863	39562	-53936
NL1/1b	GW / opgw	2598	11474	19718	2565	13238	-20757
Wind, -20°C	150C1F1	9584	42684	73492	9506	47056	-75391
Permanent loads yg= 1.2	150C1F2	9584	42669	73498	9516	46597	-75046
Wind angle: 45°	150C1F3	9584	42649	73505	9528	46044	-74655
	380C2F1	19167	85368	146984	19012	94112	-150783
	380C2F2	19168	85337	146995	19032	93193	-150092
	380C2F3	19168	85298	147010	19057	92087	-149311
	RTG	0	0	0	5153	24690	-39850
NL1/3	GW / opgw	10105	31082	53034	9972	39151	-56641
Wind, -5°C	150C1F1	16188	60296	103209	15942	73952	-111002
Permanent loads yg= 1.2	150C1F2	16188	60251	103222	15971	72512	-109768
Wind angle: 45°	150C1F3	16189	60196	103240	16006	70770	-108336
	380C2F1	32376	120592	206418	31884	147904	-222003
	380C2F2	32377	120503	206445	31941	145024	-219536
	380C2F3	32377	120392	206479	32012	141541	-216672
	RTG	0	0	0	20103	71390	-108703
NL1/4	GW / opgw	3389	12945	22266	3367	14434	-22829
Construction/maintenance, +5°C	150C1F1	11106	43162	74320	11050	47139	-75531
Permanent loads yg= 1.2	150C1F2	11106	43147	74326	11057	46732	-75277
Wind angle: 45°	150C1F3	11106	43128	74334	11066	46241	-74994
	380C2F1	22211	86325	148641	22100	94277	-151061
	380C2F2	22212	86294	148653	22115	93464	-150554
	380C2F3	22212	86257	148669	22132	92482	-149989
	RTG	0	0	0	6750	27547	-44797

NL1/1a	GW / opgw	2417	22234	29773	2417	22234	-29773
Wind, 10°C	150C1F1	8999	68283	93678	8999	68283	-93678
Permanent loads yg= 1.2	150C1F2	9028	65293	90313	9028	65293	-90313
Wind angle: 90°	150C1F3	9069	61574	86155	9069	61574	-86155
	380C2F1	17997	136566	187355	17997	136566	-187355
	380C2F2	18056	130586	180625	18056	130586	-180625
	380C2F3	18137	123149	172309	18137	123149	-172309
	RTG	0	0	0	4908	34719	-48410
NL1/1b	GW / opgw	2576	12749	20338	2576	12749	-20338
Wind, -20°C	150C1F1	9532	45873	74541	9532	45873	-74541
Permanent loads yg= 1.2	150C1F2	9539	45541	74328	9539	45541	-74328
Wind angle: 90°	150C1F3	9547	45141	74091	9547	45141	-74091
	380C2F1	19064	91746	149082	19064	91746	-149082
	380C2F2	19078	91082	148656	19078	91082	-148656
	380C2F3	19094	90281	148181	19094	90281	-148181
	RTG	0	0	0	5164	24152	-39490
NL1/3	GW / opgw	10012	37009	55123	10012	37009	-55123
Wind, -5°C	150C1F1	16017	70231	107908	16017	70231	-107908
Permanent loads yg= 1.2	150C1F2	16038	69180	107101	16038	69180	-107101
Wind angle: 90°	150C1F3	16064	67911	106177	16064	67911	-106177
	380C2F1	32033	140461	215816	32033	140461	-215816
	380C2F2	32076	138359	214201	32076	138359	-214201
	380C2F3	32128	135822	212354	32128	135822	-212354
	RTG	0	0	0	20147	68952	-107412
NL1/4	GW / opgw	3374	14036	22565	3374	14036	-22565
Construction/maintenance, +5°C	150C1F1	11069	46089	74913	11069	46089	-74913
Permanent loads yg= 1.2	150C1F2	11074	45793	74762	11074	45793	-74762
Wind angle: 90°	150C1F3	11080	45435	74597	11080	45435	-74597
	380C2F1	22138	92178	149825	22138	92178	-149825
	380C2F2	22148	91586	149524	22148	91586	-149524
	380C2F3	22160	90869	149195	22160	90869	-149195
	RTG	0	0	0	6757	27100	-44594
NL1/1a	GW / opgw	2398	25868	33934	2562	10523	-17447
Wind, 10°C	150C1F1	8918	78287	104997	9443	38178	-63931
Permanent loads yg= 1.2	150C1F2	8945	74516	100725	9444	38073	-63911
Wind angle: -45°	150C1F3	8985	69789	95377	9445	37945	-63893
	380C2F1	17835	156573	209994	18885	76356	-127862
	380C2F2	17891	149033	201450	18888	76146	-127823
	380C2F3	17970	139578	190754	18891	75890	-127786
	RTG	0	0	0	5122	20674	-34763
NL1/1b	GW / opgw	2565	13238	20757	2598	11474	-19718
Wind, -20°C	150C1F1	9506	47056	75391	9584	42684	-73492
Permanent loads yg= 1.2	150C1F2	9516	46597	75046	9584	42669	-73498
Wind angle: -45°	150C1F3	9528	46044	74655	9584	42649	-73505
	380C2F1	19012	94112	150783	19167	85368	-146984
	380C2F2	19032	93193	150092	19168	85337	-146995
	380C2F3	19057	92087	149311	19168	85298	-147010
	RTG	0	0	0	5185	22685	-39083
NL1/3	GW / opgw	9972	39151	56641	10105	31082	-53034
Wind, -5°C	150C1F1	15942	73952	111002	16188	60296	-103209
Permanent loads yg= 1.2	150C1F2	15971	72512	109768	16188	60251	-103222
Wind angle: -45°	150C1F3	16006	70770	108336	16189	60196	-103240
	380C2F1	31884	147904	222003	32376	120592	-206418
	380C2F2	31941	145024	219536	32377	120503	-206445
	380C2F3	32012	141541	216672	32377	120392	-206479
	RTG	0	0	0	20238	61990	-106297
NL1/4	GW / opgw	3367	14434	22829	3389	12945	-22266
Construction/maintenance, +5°C	150C1F1	11050	47139	75531	11106	43162	-74320
Permanent loads yg= 1.2	150C1F2	11057	46732	75277	11106	43147	-74326
Wind angle: -45°	150C1F3	11066	46241	74994	11106	43128	-74334
	380C2F1	22100	94277	151061	22211	86325	-148641
	380C2F2	22115	93464	150554	22212	86294	-148653
	380C2F3	22132	92482	149989	22212	86257	-148669
	RTG	0	0	0	6771	25807	-44489
NL1//1a	GW / opgw	1881	11153	16407	1881	11153	-16407
Wind, 10°C	150C1F1	6991	37220	56276	6991	37220	-56276
Permanent loads yg= 0.9	150C1F2	7006	36384	55432	7006	36384	-55432
Wind angle: 0°	150C1F3	7025	35375	54444	7025	35375	-54444
	380C2F1	13982	74441	112551	13982	74441	-112551
	380C2F2	14012	72769	110864	14012	72769	-110864
	380C2F3	14049	70751	108888	14049	70751	-108888
	RTG	0	0	0	3803	19456	-29793

NL1/1b	GW / opgw	1959	9488	15852	1959	9488	-15852
Wind, -20°C	150C1F1	7240	35262	59438	7240	35262	-59438
Permanent loads yg= 0.9	150C1F2	7241	35180	59417	7241	35180	-59417
Wind angle: 0°	150C1F3	7242	35080	59396	7242	35080	-59396
	380C2F1	14480	70524	118876	14480	70524	-118876
	380C2F2	14482	70360	118834	14482	70360	-118834
	380C2F3	14485	70160	118792	14485	70160	-118792
	RTG	0	0	0	3913	18494	-31252
NL1/3	GW / opgw	9477	30920	50562	9477	30920	-50562
Wind, -5°C	150C1F1	13862	55741	91970	13862	55741	-91970
Permanent loads yg= 0.9	150C1F2	13866	55503	91894	13866	55503	-91894
Wind angle: 0°	150C1F3	13870	55212	91816	13870	55212	-91816
	380C2F1	27725	111483	183940	27725	111483	-183940
	380C2F2	27732	111006	183789	27732	111006	-183789
	380C2F3	27741	110425	183631	27741	110425	-183631
	RTG	0	0	0	18997	60717	-101160
NL1/4	GW / opgw	2758	11197	18812	2758	11197	-18812
Construction/maintenance, +5°C	150C1F1	8781	36405	61417	8781	36405	-61417
Permanent loads yg= 0.9	150C1F2	8782	36331	61410	8782	36331	-61410
Wind angle: 0°	150C1F3	8783	36240	61404	8783	36240	-61404
	380C2F1	17562	72810	122834	17562	72810	-122834
	380C2F2	17564	72662	122819	17564	72662	-122819
	380C2F3	17566	72480	122809	17566	72480	-122809
	RTG	0	0	0	5512	22123	-37538
NL1/6	GW / opgw	1934	7924	13724	1934	7924	-13724
Permanent, +10°C	150C1F1	7125	29242	50649	7125	29242	-50649
Permanent loads yg= 0.9	150C1F2	7125	29242	50649	7125	29242	-50649
	150C1F3	7125	29242	50649	7125	29242	-50649
	380C2F1	14250	58484	101298	14250	58484	-101298
	380C2F2	14250	58484	101298	14250	58484	-101298
	380C2F3	14250	58484	101298	14250	58484	-101298
	RTG	0	0	0	3862	15821	-27403
NL1/1a	GW / opgw	1928	8427	13817	1785	25311	-32970
Wind, 10°C	150C1F1	7113	30545	50712	6630	75616	-100374
Permanent loads yg= 0.9	150C1F2	7114	30426	50666	6649	71626	-95721
Wind angle: 45°	150C1F3	7116	30280	50617	6676	66580	-89821
	380C2F1	14225	61091	101423	13261	151233	-200749
	380C2F2	14228	60851	101332	13298	143253	-191443
	380C2F3	14232	60560	101235	13353	133160	-179643
	RTG	0	0	0	3613	37856	-50982
NL1/1b	GW / opgw	1963	9212	15799	1921	11322	-17440
Wind, -20°C	150C1F1	7248	34549	59401	7145	39723	-62691
Permanent loads yg= 0.9	150C1F2	7248	34533	59406	7157	39161	-62169
Wind angle: 45°	150C1F3	7248	34513	59412	7173	38486	-61567
	380C2F1	14496	69097	118803	14289	79446	-125383
	380C2F2	14496	69065	118812	14315	78323	-124338
	380C2F3	14496	69025	118824	14345	76973	-123134
	RTG	0	0	0	3873	20518	-32625
NL1/3	GW / opgw	9489	29684	50613	9349	38020	-54683
Wind, -5°C	150C1F1	13887	53681	91751	13610	68629	-101785
Permanent loads yg= 0.9	150C1F2	13887	53635	91762	13640	67044	-100299
Wind angle: 45°	150C1F3	13888	53578	91777	13678	65122	-98555
	380C2F1	27774	107361	183503	27220	137259	-203570
	380C2F2	27775	107270	183524	27281	134088	-200598
	380C2F3	27775	107155	183554	27356	130244	-197110
	RTG	0	0	0	18863	68863	-104327
NL1/4	GW / opgw	2760	10957	18822	2733	12620	-19686
Construction/maintenance, +5°C	150C1F1	8786	35744	61471	8715	40231	-63568
Permanent loads yg= 0.9	150C1F2	8786	35728	61476	8725	39757	-63197
Wind angle: 45°	150C1F3	8786	35709	61483	8736	39186	-62776
	380C2F1	17573	71488	122942	17431	80462	-127135
	380C2F2	17573	71456	122953	17449	79514	-126394
	380C2F3	17573	71418	122967	17471	78373	-125553
	RTG	0	0	0	5488	23733	-38191
NL1/1a	GW / opgw	1797	21525	28546	1797	21525	-28546
Wind, 10°C	150C1F1	6686	64961	87926	6686	64961	-87926
Permanent loads yg= 0.9	150C1F2	6707	61727	84138	6707	61727	-84138
Wind angle: 90°	150C1F3	6738	57664	79383	6738	57664	-79383
	380C2F1	13372	129922	175852	13372	129922	-175852
	380C2F2	13415	123453	168277	13415	123453	-168277
	380C2F3	13476	115327	158766	13476	115327	-158766
	RTG	0	0	0	3646	32629	-44792

NL1/1b	GW / opgw	1934	10727	16835	1934	10727	-16835
Wind, -20°C	150C1F1	7177	38278	61388	7177	38278	-61388
Permanent loads yg= 0.9	150C1F2	7187	37875	61051	7187	37875	-61051
Wind angle: 90°	150C1F3	7197	37390	60666	7197	37390	-60666
	380C2F1	14355	76557	122776	14355	76557	-122776
	380C2F2	14373	75749	122101	14373	75749	-122101
	380C2F3	14395	74779	121333	14395	74779	-121333
	RTG	0	0	0	3887	19864	-32063
NL1/3	GW / opgw	9390	35799	53028	9390	35799	-53028
Wind, -5°C	150C1F1	13690	64525	98029	13690	64525	-98029
Permanent loads yg= 0.9	150C1F2	13714	63363	97029	13714	63363	-97029
Wind angle: 90°	150C1F3	13742	61960	95872	13742	61960	-95872
	380C2F1	27380	129051	196058	27380	129051	-196058
	380C2F2	27427	126727	194058	27427	126727	-194058
	380C2F3	27485	123920	191745	27485	123920	-191745
	RTG	0	0	0	18910	66335	-102880
NL1/4	GW / opgw	2742	12164	19323	2742	12164	-19323
Construction/maintenance, +5°C	150C1F1	8739	39010	62653	8739	39010	-62653
Permanent loads yg= 0.9	150C1F2	8745	38668	62422	8745	38668	-62422
Wind angle: 90°	150C1F3	8753	38255	62164	8753	38255	-62164
	380C2F1	17478	78020	125305	17478	78020	-125305
	380C2F2	17491	77336	124844	17491	77336	-124844
	380C2F3	17506	76511	124327	17506	76511	-124327
	RTG	0	0	0	5497	23228	-37888
NL1/1a	GW / opgw	1785	25311	32970	1928	8427	-13817
Wind, 10°C	150C1F1	6630	75616	100374	7113	30545	-50712
Permanent loads yg= 0.9	150C1F2	6649	71626	95721	7114	30426	-50666
Wind angle: -45°	150C1F3	6676	66580	89821	7116	30280	-50617
	380C2F1	13261	151233	200749	14225	61091	-101423
	380C2F2	13298	143253	191443	14228	60851	-101332
	380C2F3	13353	133160	179643	14232	60560	-101235
	RTG	0	0	0	3857	16426	-27404
NL1/1b	GW / opgw	1921	11322	17440	1963	9212	-15799
Wind, -20°C	150C1F1	7145	39723	62691	7248	34549	-59401
Permanent loads yg= 0.9	150C1F2	7157	39161	62169	7248	34533	-59406
Wind angle: -45°	150C1F3	7173	38486	61567	7248	34513	-59412
	380C2F1	14289	79446	125383	14496	69097	-118803
	380C2F2	14315	78323	124338	14496	69065	-118812
	380C2F3	14345	76973	123134	14496	69025	-118824
	RTG	0	0	0	3916	18164	-31251
NL1/3	GW / opgw	9349	38020	54683	9489	29684	-50613
Wind, -5°C	150C1F1	13610	68629	101785	13887	53681	-91751
Permanent loads yg= 0.9	150C1F2	13640	67044	100299	13887	53635	-91762
Wind angle: -45°	150C1F3	13678	65122	98555	13888	53578	-91777
	380C2F1	27220	137259	203570	27774	107361	-183503
	380C2F2	27281	134088	200598	27775	107270	-183524
	380C2F3	27356	130244	197110	27775	107155	-183554
	RTG	0	0	0	19008	59189	-101445
NL1/4	GW / opgw	2733	12620	19686	2760	10957	-18822
Construction/maintenance, +5°C	150C1F1	8715	40231	63568	8786	35744	-61471
Permanent loads yg= 0.9	150C1F2	8725	39757	63197	8786	35728	-61476
Wind angle: -45°	150C1F3	8736	39186	62776	8786	35709	-61483
	380C2F1	17431	80462	127135	17573	71488	-122942
	380C2F2	17449	79514	126394	17573	71456	-122953
	380C2F3	17471	78373	125553	17573	71418	-122967
	RTG	0	0	0	5514	21825	-37593

ZWW4HM400+5

Loadcases for tower strength (Special limit state)

		Ahead			Back		
Loadcase according to 50341-3-15	Att. Point	Vertical [N]	Transversal [N]	Longitudinal [N]	Vertical [N]	Transversal [N]	Longitudinal [N]
NL3/1a	GW / opgw	0	0	0	2552	11153	-17805
Wind, 10°C	150C1F1	0	0	0	9419	39740	-64571
Permanent loads yg= 1.2	150C1F2	0	0	0	9423	39476	-64429
Wind angle: 0°	150C1F3	0	0	0	9429	39158	-64272
	380C2F1	0	0	0	18838	79480	-129142
	380C2F2	0	0	0	18847	78952	-128857
	380C2F3	0	0	0	18857	78315	-128544
	RTG	0	0	0	5112	21390	-35017
NL3/1b	GW / opgw	0	0	0	2597	11647	-19708
Wind, -20°C	150C1F1	0	0	0	9580	43143	-73416
Permanent loads yg= 1.2	150C1F2	0	0	0	9581	43088	-73417
Wind angle: 0°	150C1F3	0	0	0	9581	43020	-73422
	380C2F1	0	0	0	19160	86286	-146831
	380C2F2	0	0	0	19162	86176	-146834
	380C2F3	0	0	0	19163	86041	-146843
	RTG	0	0	0	5183	22900	-39040
NL3/3	GW / opgw	0	0	0	4264	17601	-28095
Wind, -5°C	150C1F1	0	0	0	10993	46508	-76894
Permanent loads yg= 1.2	150C1F2	0	0	0	10996	46311	-76822
Wind angle: 0°	150C1F3	0	0	0	10999	46071	-76746
	380C2F1	0	0	0	21985	93017	-153789
	380C2F2	0	0	0	21991	92622	-153644
	380C2F3	0	0	0	21999	92141	-153491
	RTG	0	0	0	8550	33841	-55415
NL3/4	GW / opgw	0	0	0	3225	12601	-21361
Construction/maintenance, +5°C	150C1F1	0	0	0	10777	42589	-72456
Permanent loads yg= 1.2	150C1F2	0	0	0	10777	42537	-72461
Wind angle: 0°	150C1F3	0	0	0	10777	42472	-72471
	380C2F1	0	0	0	21553	85178	-144911
	380C2F2	0	0	0	21554	85073	-144923
	380C2F3	0	0	0	21555	84943	-144941
	RTG	0	0	0	6443	24997	-42671
NL3/1a	GW / opgw	0	0	0	2461	17001	-23796
Wind, 10°C	150C1F1	0	0	0	9163	54340	-78215
Permanent loads yg= 1.2	150C1F2	0	0	0	9190	52571	-76325
Wind angle: 45°	150C1F3	0	0	0	9224	50410	-74057
	380C2F1	0	0	0	18326	108679	-156431
	380C2F2	0	0	0	18380	105142	-152649
	380C2F3	0	0	0	18449	100820	-148114
	RTG	0	0	0	4994	28099	-41087
NL3/1b	GW / opgw	0	0	0	2576	12740	-20330
Wind, -20°C	150C1F1	0	0	0	9532	45851	-74527
Permanent loads yg= 1.2	150C1F2	0	0	0	9539	45521	-74316
Wind angle: 45°	150C1F3	0	0	0	9548	45124	-74081
	380C2F1	0	0	0	19065	91702	-149053
	380C2F2	0	0	0	19079	91042	-148632
	380C2F3	0	0	0	19095	90248	-148162
	RTG	0	0	0	5164	24142	-39484
NL3/3	GW / opgw	0	0	0	4124	25850	-35846
Wind, -5°C	150C1F1	0	0	0	10779	57342	-85655
Permanent loads yg= 1.2	150C1F2	0	0	0	10805	56002	-84343
Wind angle: 45°	150C1F3	0	0	0	10836	54379	-82799
	380C2F1	0	0	0	21558	114684	-171311
	380C2F2	0	0	0	21609	112005	-168685
	380C2F3	0	0	0	21673	108759	-165599
	RTG	0	0	0	8372	43299	-63052
NL3/4	GW / opgw	0	0	0	3211	13548	-21728
Construction/maintenance, +5°C	150C1F1	0	0	0	10741	45090	-73206
Permanent loads yg= 1.2	150C1F2	0	0	0	10746	44791	-73048
Wind angle: 45°	150C1F3	0	0	0	10753	44429	-72875
	380C2F1	0	0	0	21483	90180	-146412
	380C2F2	0	0	0	21493	89582	-146097
	380C2F3	0	0	0	21505	88858	-145750
	RTG	0	0	0	6430	26100	-42874
NL3/1a	GW / opgw	0	0	0	2484	15204	-21794
Wind, 10°C	150C1F1	0	0	0	9236	49735	-73361
Permanent loads yg= 1.2	150C1F2	0	0	0	9258	48417	-72020
Wind angle: 90°	150C1F3	0	0	0	9287	46818	-70436
	380C2F1	0	0	0	18471	99471	-146722
	380C2F2	0	0	0	18516	96834	-144041
	380C2F3	0	0	0	18573	93636	-140873
	RTG	0	0	0	5029	25959	-38867

NL3/1b	GW / opgw	0	0	0	2583	12391	-20066
Wind, -20°C	150C1F1	0	0	0	9550	45001	-74013
Permanent loads yg= 1.2	150C1F2	0	0	0	9555	44761	-73888
Wind angle: 90°	150C1F3	0	0	0	9560	44472	-73751
	380C2F1	0	0	0	19100	90001	-148026
	380C2F2	0	0	0	19109	89522	-147776
	380C2F3	0	0	0	19120	88943	-147502
	RTG	0	0	0	5171	23755	-39270
NL3/3	GW / opgw	0	0	0	4159	23320	-33216
Wind, -5°C	150C1F1	0	0	0	10847	53876	-82333
Permanent loads yg= 1.2	150C1F2	0	0	0	10866	52896	-81446
Wind angle: 90°	150C1F3	0	0	0	10891	51714	-80417
	380C2F1	0	0	0	21693	107752	-164666
	380C2F2	0	0	0	21733	105792	-162891
	380C2F3	0	0	0	21781	103428	-160834
	RTG	0	0	0	8426	40301	-60203
NL3/4	GW / opgw	0	0	0	3216	13252	-21556
Construction/maintenance, +5°C	150C1F1	0	0	0	10754	44316	-72826
Permanent loads yg= 1.2	150C1F2	0	0	0	10758	44097	-72736
Wind angle: 90°	150C1F3	0	0	0	10762	43831	-72640
	380C2F1	0	0	0	21509	88633	-145651
	380C2F2	0	0	0	21516	88194	-145472
	380C2F3	0	0	0	21524	87662	-145280
	RTG	0	0	0	6435	25765	-42750
NL3/1a	GW / opgw	0	0	0	2565	10276	-17394
Wind, 10°C	150C1F1	0	0	0	9449	37542	-63884
Permanent loads yg= 1.2	150C1F2	0	0	0	9450	37497	-63889
Wind angle: -45°	150C1F3	0	0	0	9450	37440	-63896
	380C2F1	0	0	0	18898	75085	-127768
	380C2F2	0	0	0	18899	74993	-127777
	380C2F3	0	0	0	18900	74880	-127792
	RTG	0	0	0	5124	20380	-34754
NL3/1b	GW / opgw	0	0	0	2598	11459	-19723
Wind, -20°C	150C1F1	0	0	0	9584	42642	-73508
Permanent loads yg= 1.2	150C1F2	0	0	0	9584	42630	-73512
Wind angle: -45°	150C1F3	0	0	0	9584	42615	-73519
	380C2F1	0	0	0	19168	85285	-147015
	380C2F2	0	0	0	19168	85260	-147025
	380C2F3	0	0	0	19168	85230	-147037
	RTG	0	0	0	5185	22666	-39091
NL3/3	GW / opgw	0	0	0	4284	16321	-27629
Wind, -5°C	150C1F1	0	0	0	11014	44816	-76643
Permanent loads yg= 1.2	150C1F2	0	0	0	11014	44779	-76650
Wind angle: -45°	150C1F3	0	0	0	11014	44732	-76661
	380C2F1	0	0	0	22027	89632	-153285
	380C2F2	0	0	0	22028	89557	-153301
	380C2F3	0	0	0	22028	89465	-153323
	RTG	0	0	0	8568	32350	-55175
NL3/4	GW / opgw	0	0	0	3226	12425	-21395
Construction/maintenance, +5°C	150C1F1	0	0	0	10779	42104	-72575
Permanent loads yg= 1.2	150C1F2	0	0	0	10779	42092	-72580
Wind angle: -45°	150C1F3	0	0	0	10779	42077	-72587
	380C2F1	0	0	0	21558	84208	-145150
	380C2F2	0	0	0	21558	84184	-145160
	380C2F3	0	0	0	21559	84154	-145174
	RTG	0	0	0	6444	24773	-42740
NL3/1a	GW / opgw	0	0	0	1915	9180	-14387
Wind, 10°C	150C1F1	0	0	0	7081	32383	-51830
Permanent loads yg= 0.9	150C1F2	0	0	0	7087	32068	-51599
Wind angle: 0°	150C1F3	0	0	0	7094	31690	-51338
	380C2F1	0	0	0	14162	64767	-103661
	380C2F2	0	0	0	14174	64137	-103198
	380C2F3	0	0	0	14187	63379	-102675
	RTG	0	0	0	3843	17260	-27865
NL3/1b	GW / opgw	0	0	0	1961	9402	-15819
Wind, -20°C	150C1F1	0	0	0	7243	35045	-59390
Permanent loads yg= 0.9	150C1F2	0	0	0	7244	34984	-59381
Wind angle: 0°	150C1F3	0	0	0	7245	34910	-59374
	380C2F1	0	0	0	14486	70090	-118780
	380C2F2	0	0	0	14487	69968	-118762
	380C2F3	0	0	0	14489	69819	-118747
	RTG	0	0	0	3914	18394	-31236

NL3/3	GW / opgw	0	0	0	3634	15856	-25073
Wind, -5°C	150C1F1	0	0	0	8663	39148	-64147
Permanent loads yg= 0.9	150C1F2	0	0	0	8667	38922	-64025
Wind angle: 0°	150C1F3	0	0	0	8672	38649	-63891
	380C2F1	0	0	0	17326	78296	-128293
	380C2F2	0	0	0	17334	77844	-128050
	380C2F3	0	0	0	17344	77298	-127782
	RTG	0	0	0	7295	30218	-49140
NL3/4	GW / opgw	0	0	0	2595	10591	-17879
Construction/maintenance, +5°C	150C1F1	0	0	0	8455	35123	-59524
Permanent loads yg= 0.9	150C1F2	0	0	0	8455	35066	-59523
Wind angle: 0°	150C1F3	0	0	0	8456	34997	-59524
	380C2F1	0	0	0	16909	70245	-119047
	380C2F2	0	0	0	16910	70133	-119045
	380C2F3	0	0	0	16912	69994	-119048
	RTG	0	0	0	5185	20962	-35683
NL3/1a	GW / opgw	0	0	0	1829	15923	-21930
Wind, 10°C	150C1F1	0	0	0	6815	49592	-69994
Permanent loads yg= 0.9	150C1F2	0	0	0	6838	47577	-67677
Wind angle: 45°	150C1F3	0	0	0	6869	45089	-64843
	380C2F1	0	0	0	13629	99184	-139988
	380C2F2	0	0	0	13675	95154	-135355
	380C2F3	0	0	0	13738	90178	-129687
	RTG	0	0	0	3716	25224	-36107
NL3/1b	GW / opgw	0	0	0	1934	10716	-16824
Wind, -20°C	150C1F1	0	0	0	7178	38252	-61365
Permanent loads yg= 0.9	150C1F2	0	0	0	7187	37851	-61031
Wind angle: 45°	150C1F3	0	0	0	7198	37369	-60651
	380C2F1	0	0	0	14356	76503	-122731
	380C2F2	0	0	0	14374	75701	-122063
	380C2F3	0	0	0	14396	74739	-121302
	RTG	0	0	0	3888	19852	-32053
NL3/3	GW / opgw	0	0	0	3493	24835	-34090
Wind, -5°C	150C1F1	0	0	0	8421	51781	-76025
Permanent loads yg= 0.9	150C1F2	0	0	0	8447	50238	-74361
Wind angle: 45°	150C1F3	0	0	0	8481	48358	-72372
	380C2F1	0	0	0	16843	103562	-152051
	380C2F2	0	0	0	16894	100477	-148723
	380C2F3	0	0	0	16961	96716	-144744
	RTG	0	0	0	7104	40646	-58458
NL3/4	GW / opgw	0	0	0	2577	11658	-18456
Construction/maintenance, +5°C	150C1F1	0	0	0	8409	37961	-60860
Permanent loads yg= 0.9	150C1F2	0	0	0	8416	37613	-60617
Wind angle: 45°	150C1F3	0	0	0	8423	37193	-60344
	380C2F1	0	0	0	16818	75923	-121720
	380C2F2	0	0	0	16831	75226	-121234
	380C2F3	0	0	0	16847	74387	-120688
	RTG	0	0	0	5168	22180	-36085
NL3/1a	GW / opgw	0	0	0	1846	13927	-19581
Wind, 10°C	150C1F1	0	0	0	6880	44306	-63960
Permanent loads yg= 0.9	150C1F2	0	0	0	6901	42767	-62237
Wind angle: 90°	150C1F3	0	0	0	6930	40884	-60161
	380C2F1	0	0	0	13759	88613	-127920
	380C2F2	0	0	0	13803	85535	-124474
	380C2F3	0	0	0	13859	81768	-120321
	RTG	0	0	0	3750	22733	-33281
NL3/1b	GW / opgw	0	0	0	1943	10289	-16426
Wind, -20°C	150C1F1	0	0	0	7201	37221	-60539
Permanent loads yg= 0.9	150C1F2	0	0	0	7208	36933	-60329
Wind angle: 90°	150C1F3	0	0	0	7215	36586	-60094
	380C2F1	0	0	0	14402	74442	-121078
	380C2F2	0	0	0	14415	73865	-120659
	380C2F3	0	0	0	14430	73172	-120187
	RTG	0	0	0	3897	19385	-31702
NL3/3	GW / opgw	0	0	0	3525	22131	-31158
Wind, -5°C	150C1F1	0	0	0	8491	47772	-71763
Permanent loads yg= 0.9	150C1F2	0	0	0	8513	46628	-70591
Wind angle: 90°	150C1F3	0	0	0	8540	45243	-69211
	380C2F1	0	0	0	16983	95544	-143525
	380C2F2	0	0	0	17026	93256	-141182
	380C2F3	0	0	0	17080	90486	-138422
	RTG	0	0	0	7158	37363	-55115

NL3/4	GW / opgw	0	0	0	2583	11319	-18208
Construction/maintenance, +5°C	150C1F1	0	0	0	8426	37064	-60264
Permanent loads yg= 0.9	150C1F2	0	0	0	8430	36811	-60117
Wind angle: 90°	150C1F3	0	0	0	8435	36507	-59954
	380C2F1	0	0	0	16851	74127	-120529
	380C2F2	0	0	0	16860	73623	-120235
	380C2F3	0	0	0	16871	73014	-119909
	RTG	0	0	0	5174	21802	-35887
NL3/1a	GW / opgw	0	0	0	1932	8144	-13701
Wind, 10°C	150C1F1	0	0	0	7121	29832	-50530
Permanent loads yg= 0.9	150C1F2	0	0	0	7122	29782	-50528
Wind angle: -45°	150C1F3	0	0	0	7122	29721	-50527
	380C2F1	0	0	0	14243	59665	-101060
	380C2F2	0	0	0	14244	59565	-101055
	380C2F3	0	0	0	14245	59442	-101054
	RTG	0	0	0	3860	16098	-27338
NL3/1b	GW / opgw	0	0	0	1963	9195	-15802
Wind, -20°C	150C1F1	0	0	0	7248	34505	-59414
Permanent loads yg= 0.9	150C1F2	0	0	0	7248	34493	-59418
Wind angle: -45°	150C1F3	0	0	0	7248	34477	-59424
	380C2F1	0	0	0	14496	69011	-118828
	380C2F2	0	0	0	14496	68985	-118836
	380C2F3	0	0	0	14496	68954	-118847
	RTG	0	0	0	3916	18143	-31257
NL3/3	GW / opgw	0	0	0	3657	14462	-24409
Wind, -5°C	150C1F1	0	0	0	8691	37264	-63563
Permanent loads yg= 0.9	150C1F2	0	0	0	8691	37225	-63567
Wind angle: -45°	150C1F3	0	0	0	8691	37176	-63573
	380C2F1	0	0	0	17381	74528	-127125
	380C2F2	0	0	0	17382	74449	-127133
	380C2F3	0	0	0	17382	74352	-127147
	RTG	0	0	0	7317	28620	-48714
NL3/4	GW / opgw	0	0	0	2596	10405	-17897
Construction/maintenance, +5°C	150C1F1	0	0	0	8458	34612	-59598
Permanent loads yg= 0.9	150C1F2	0	0	0	8458	34600	-59603
Wind angle: -45°	150C1F3	0	0	0	8458	34584	-59609
	380C2F1	0	0	0	16916	69224	-119196
	380C2F2	0	0	0	16916	69199	-119206
	380C2F3	0	0	0	16916	69168	-119218
	RTG	0	0	0	5186	20729	-35737

ZWW4HM400+5

Loadcases for tower strength (Special limit state)

		Ahead			Back		
Loadcase according to 50341-3-15	Att. Point	Vertical [N]	Transversal [N]	Longitudinal [N]	Vertical [N]	Transversal [N]	Longitudinal [N]
NL3/1a	GW / opgw	2552	11153	17805	0	0	0
Wind, 10°C	150C1F1	9419	39740	64571	0	0	0
Permanent loads yg= 1.2	150C1F2	9423	39476	64429	0	0	0
Wind angle: 0°	150C1F3	9429	39158	64272	0	0	0
	380C2F1	18838	79480	129142	0	0	0
	380C2F2	18847	78952	128857	0	0	0
	380C2F3	18857	78315	128544	0	0	0
	RTG	0	0	0	0	0	0
NL3/1b	GW / opgw	2597	11647	19708	0	0	0
Wind, -20°C	150C1F1	9580	43143	73416	0	0	0
Permanent loads yg= 1.2	150C1F2	9581	43088	73417	0	0	0
Wind angle: 0°	150C1F3	9581	43020	73422	0	0	0
	380C2F1	19160	86286	146831	0	0	0
	380C2F2	19162	86176	146834	0	0	0
	380C2F3	19163	86041	146843	0	0	0
	RTG	0	0	0	0	0	0
NL3/3	GW / opgw	4264	17601	28095	0	0	0
Wind, -5°C	150C1F1	10993	46508	76894	0	0	0
Permanent loads yg= 1.2	150C1F2	10996	46311	76822	0	0	0
Wind angle: 0°	150C1F3	10999	46071	76746	0	0	0
	380C2F1	21985	93017	153789	0	0	0
	380C2F2	21991	92622	153644	0	0	0
	380C2F3	21999	92141	153491	0	0	0
	RTG	0	0	0	0	0	0
NL3/4	GW / opgw	3225	12601	21361	0	0	0
Construction/maintenance, +5°C	150C1F1	10777	42589	72456	0	0	0
Permanent loads yg= 1.2	150C1F2	10777	42537	72461	0	0	0
Wind angle: 0°	150C1F3	10777	42472	72471	0	0	0
	380C2F1	21553	85178	144911	0	0	0
	380C2F2	21554	85073	144923	0	0	0
	380C2F3	21555	84943	144941	0	0	0
	RTG	0	0	0	0	0	0
NL3/1a	GW / opgw	2565	10276	17394	0	0	0
Wind, 10°C	150C1F1	9449	37542	63884	0	0	0
Permanent loads yg= 1.2	150C1F2	9450	37497	63889	0	0	0
Wind angle: 45°	150C1F3	9450	37440	63896	0	0	0
	380C2F1	18898	75085	127768	0	0	0
	380C2F2	18899	74993	127777	0	0	0
	380C2F3	18900	74880	127792	0	0	0
	RTG	0	0	0	0	0	0
NL3/1b	GW / opgw	2598	11459	19723	0	0	0
Wind, -20°C	150C1F1	9584	42642	73508	0	0	0
Permanent loads yg= 1.2	150C1F2	9584	42630	73512	0	0	0
Wind angle: 45°	150C1F3	9584	42615	73519	0	0	0
	380C2F1	19168	85285	147015	0	0	0
	380C2F2	19168	85260	147025	0	0	0
	380C2F3	19168	85230	147037	0	0	0
	RTG	0	0	0	0	0	0
NL3/3	GW / opgw	4284	16321	27629	0	0	0
Wind, -5°C	150C1F1	11014	44816	76643	0	0	0
Permanent loads yg= 1.2	150C1F2	11014	44779	76650	0	0	0
Wind angle: 45°	150C1F3	11014	44732	76661	0	0	0
	380C2F1	22027	89632	153285	0	0	0
	380C2F2	22028	89557	153301	0	0	0
	380C2F3	22028	89465	153323	0	0	0
	RTG	0	0	0	0	0	0
NL3/4	GW / opgw	3226	12425	21395	0	0	0
Construction/maintenance, +5°C	150C1F1	10779	42104	72575	0	0	0
Permanent loads yg= 1.2	150C1F2	10779	42092	72580	0	0	0
Wind angle: 45°	150C1F3	10779	42077	72587	0	0	0
	380C2F1	21558	84208	145150	0	0	0
	380C2F2	21558	84184	145160	0	0	0
	380C2F3	21559	84154	145174	0	0	0
	RTG	0	0	0	0	0	0
NL3/1a	GW / opgw	2484	15204	21794	0	0	0
Wind, 10°C	150C1F1	9236	49735	73361	0	0	0
Permanent loads yg= 1.2	150C1F2	9258	48417	72020	0	0	0
Wind angle: 90°	150C1F3	9287	46818	70436	0	0	0
	380C2F1	18471	99471	146722	0	0	0
	380C2F2	18516	96834	144041	0	0	0
	380C2F3	18573	93636	140873	0	0	0
	RTG	0	0	0	0	0	0

NL3/1b	GW / opgw	2583	12391	20066	0	0	0
Wind, -20°C	150C1F1	9550	45001	74013	0	0	0
Permanent loads yg= 1.2	150C1F2	9555	44761	73888	0	0	0
Wind angle: 90°	150C1F3	9560	44472	73751	0	0	0
	380C2F1	19100	90001	148026	0	0	0
	380C2F2	19109	89522	147776	0	0	0
	380C2F3	19120	88943	147502	0	0	0
	RTG	0	0	0	0	0	0
NL3/3	GW / opgw	4159	23320	33216	0	0	0
Wind, -5°C	150C1F1	10847	53876	82333	0	0	0
Permanent loads yg= 1.2	150C1F2	10866	52896	81446	0	0	0
Wind angle: 90°	150C1F3	10891	51714	80417	0	0	0
	380C2F1	21693	107752	164666	0	0	0
	380C2F2	21733	105792	162891	0	0	0
	380C2F3	21781	103428	160834	0	0	0
	RTG	0	0	0	0	0	0
NL3/4	GW / opgw	3216	13252	21556	0	0	0
Construction/maintenance, +5°C	150C1F1	10754	44316	72826	0	0	0
Permanent loads yg= 1.2	150C1F2	10758	44097	72736	0	0	0
Wind angle: 90°	150C1F3	10762	43831	72640	0	0	0
	380C2F1	21509	88633	145651	0	0	0
	380C2F2	21516	88194	145472	0	0	0
	380C2F3	21524	87662	145280	0	0	0
	RTG	0	0	0	0	0	0
NL3/1a	GW / opgw	2461	17001	23796	0	0	0
Wind, 10°C	150C1F1	9163	54340	78215	0	0	0
Permanent loads yg= 1.2	150C1F2	9190	52571	76325	0	0	0
Wind angle: -45°	150C1F3	9224	50410	74057	0	0	0
	380C2F1	18326	108679	156431	0	0	0
	380C2F2	18380	105142	152649	0	0	0
	380C2F3	18449	100820	148114	0	0	0
	RTG	0	0	0	0	0	0
NL3/1b	GW / opgw	2576	12740	20330	0	0	0
Wind, -20°C	150C1F1	9532	45851	74527	0	0	0
Permanent loads yg= 1.2	150C1F2	9539	45521	74316	0	0	0
Wind angle: -45°	150C1F3	9548	45124	74081	0	0	0
	380C2F1	19065	91702	149053	0	0	0
	380C2F2	19079	91042	148632	0	0	0
	380C2F3	19095	90248	148162	0	0	0
	RTG	0	0	0	0	0	0
NL3/3	GW / opgw	4124	25850	35846	0	0	0
Wind, -5°C	150C1F1	10779	57342	85655	0	0	0
Permanent loads yg= 1.2	150C1F2	10805	56002	84343	0	0	0
Wind angle: -45°	150C1F3	10836	54379	82799	0	0	0
	380C2F1	21558	114684	171311	0	0	0
	380C2F2	21609	112005	168685	0	0	0
	380C2F3	21673	108759	165599	0	0	0
	RTG	0	0	0	0	0	0
NL3/4	GW / opgw	3211	13548	21728	0	0	0
Construction/maintenance, +5°C	150C1F1	10741	45090	73206	0	0	0
Permanent loads yg= 1.2	150C1F2	10746	44791	73048	0	0	0
Wind angle: -45°	150C1F3	10753	44429	72875	0	0	0
	380C2F1	21483	90180	146412	0	0	0
	380C2F2	21493	89582	146097	0	0	0
	380C2F3	21505	88858	145750	0	0	0
	RTG	0	0	0	0	0	0
NL3/1a	GW / opgw	1915	9180	14387	0	0	0
Wind, 10°C	150C1F1	7081	32383	51830	0	0	0
Permanent loads yg= 0.9	150C1F2	7087	32068	51599	0	0	0
Wind angle: 0°	150C1F3	7094	31690	51338	0	0	0
	380C2F1	14162	64767	103661	0	0	0
	380C2F2	14174	64137	103198	0	0	0
	380C2F3	14187	63379	102675	0	0	0
	RTG	0	0	0	0	0	0
NL3/1b	GW / opgw	1961	9402	15819	0	0	0
Wind, -20°C	150C1F1	7243	35045	59390	0	0	0
Permanent loads yg= 0.9	150C1F2	7244	34984	59381	0	0	0
Wind angle: 0°	150C1F3	7245	34910	59374	0	0	0
	380C2F1	14486	70090	118780	0	0	0
	380C2F2	14487	69968	118762	0	0	0
	380C2F3	14489	69819	118747	0	0	0
	RTG	0	0	0	0	0	0

NL3/3	GW / opgw	3634	15856	25073	0	0	0
Wind, -5°C	150C1F1	8663	39148	64147	0	0	0
Permanent loads yg= 0.9	150C1F2	8667	38922	64025	0	0	0
Wind angle: 0°	150C1F3	8672	38649	63891	0	0	0
	380C2F1	17326	78296	128293	0	0	0
	380C2F2	17334	77844	128050	0	0	0
	380C2F3	17344	77298	127782	0	0	0
	RTG	0	0	0	0	0	0
NL3/4	GW / opgw	2595	10591	17879	0	0	0
Construction/maintenance, +5°C	150C1F1	8455	35123	59524	0	0	0
Permanent loads yg= 0.9	150C1F2	8455	35066	59523	0	0	0
Wind angle: 0°	150C1F3	8456	34997	59524	0	0	0
	380C2F1	16909	70245	119047	0	0	0
	380C2F2	16910	70133	119045	0	0	0
	380C2F3	16912	69994	119048	0	0	0
	RTG	0	0	0	0	0	0
NL3/1a	GW / opgw	1932	8144	13701	0	0	0
Wind, 10°C	150C1F1	7121	29832	50530	0	0	0
Permanent loads yg= 0.9	150C1F2	7122	29782	50528	0	0	0
Wind angle: 45°	150C1F3	7122	29721	50527	0	0	0
	380C2F1	14243	59665	101060	0	0	0
	380C2F2	14244	59565	101055	0	0	0
	380C2F3	14245	59442	101054	0	0	0
	RTG	0	0	0	0	0	0
NL3/1b	GW / opgw	1963	9195	15802	0	0	0
Wind, -20°C	150C1F1	7248	34505	59414	0	0	0
Permanent loads yg= 0.9	150C1F2	7248	34493	59418	0	0	0
Wind angle: 45°	150C1F3	7248	34477	59424	0	0	0
	380C2F1	14496	69011	118828	0	0	0
	380C2F2	14496	68985	118836	0	0	0
	380C2F3	14496	68954	118847	0	0	0
	RTG	0	0	0	0	0	0
NL3/3	GW / opgw	3657	14462	24409	0	0	0
Wind, -5°C	150C1F1	8691	37264	63563	0	0	0
Permanent loads yg= 0.9	150C1F2	8691	37225	63567	0	0	0
Wind angle: 45°	150C1F3	8691	37176	63573	0	0	0
	380C2F1	17381	74528	127125	0	0	0
	380C2F2	17382	74449	127133	0	0	0
	380C2F3	17382	74352	127147	0	0	0
	RTG	0	0	0	0	0	0
NL3/4	GW / opgw	2596	10405	17897	0	0	0
Construction/maintenance, +5°C	150C1F1	8458	34612	59598	0	0	0
Permanent loads yg= 0.9	150C1F2	8458	34600	59603	0	0	0
Wind angle: 45°	150C1F3	8458	34584	59609	0	0	0
	380C2F1	16916	69224	119196	0	0	0
	380C2F2	16916	69199	119206	0	0	0
	380C2F3	16916	69168	119218	0	0	0
	RTG	0	0	0	0	0	0
NL3/1a	GW / opgw	1846	13927	19581	0	0	0
Wind, 10°C	150C1F1	6880	44306	63960	0	0	0
Permanent loads yg= 0.9	150C1F2	6901	42767	62237	0	0	0
Wind angle: 90°	150C1F3	6930	40884	60161	0	0	0
	380C2F1	13759	88613	127920	0	0	0
	380C2F2	13803	85535	124474	0	0	0
	380C2F3	13859	81768	120321	0	0	0
	RTG	0	0	0	0	0	0
NL3/1b	GW / opgw	1943	10289	16426	0	0	0
Wind, -20°C	150C1F1	7201	37221	60539	0	0	0
Permanent loads yg= 0.9	150C1F2	7208	36933	60329	0	0	0
Wind angle: 90°	150C1F3	7215	36586	60094	0	0	0
	380C2F1	14402	74442	121078	0	0	0
	380C2F2	14415	73865	120659	0	0	0
	380C2F3	14430	73172	120187	0	0	0
	RTG	0	0	0	0	0	0
NL3/3	GW / opgw	3525	22131	31158	0	0	0
Wind, -5°C	150C1F1	8491	47772	71763	0	0	0
Permanent loads yg= 0.9	150C1F2	8513	46628	70591	0	0	0
Wind angle: 90°	150C1F3	8540	45243	69211	0	0	0
	380C2F1	16983	95544	143525	0	0	0
	380C2F2	17026	93256	141182	0	0	0
	380C2F3	17080	90486	138422	0	0	0
	RTG	0	0	0	0	0	0

NL3/4	GW / opgw	2583	11319	18208	0	0	0
Construction/maintenance, +5°C	150C1F1	8426	37064	60264	0	0	0
Permanent loads yg= 0.9	150C1F2	8430	36811	60117	0	0	0
Wind angle: 90°	150C1F3	8435	36507	59954	0	0	0
	380C2F1	16851	74127	120529	0	0	0
	380C2F2	16860	73623	120235	0	0	0
	380C2F3	16871	73014	119909	0	0	0
	RTG	0	0	0	0	0	0
NL3/1a	GW / opgw	1829	15923	21930	0	0	0
Wind, 10°C	150C1F1	6815	49592	69994	0	0	0
Permanent loads yg= 0.9	150C1F2	6838	47577	67677	0	0	0
Wind angle: -45°	150C1F3	6869	45089	64843	0	0	0
	380C2F1	13629	99184	139988	0	0	0
	380C2F2	13675	95154	135355	0	0	0
	380C2F3	13738	90178	129687	0	0	0
	RTG	0	0	0	0	0	0
NL3/1b	GW / opgw	1934	10716	16824	0	0	0
Wind, -20°C	150C1F1	7178	38252	61365	0	0	0
Permanent loads yg= 0.9	150C1F2	7187	37851	61031	0	0	0
Wind angle: -45°	150C1F3	7198	37369	60651	0	0	0
	380C2F1	14356	76503	122731	0	0	0
	380C2F2	14374	75701	122063	0	0	0
	380C2F3	14396	74739	121302	0	0	0
	RTG	0	0	0	0	0	0
NL3/3	GW / opgw	3493	24835	34090	0	0	0
Wind, -5°C	150C1F1	8421	51781	76025	0	0	0
Permanent loads yg= 0.9	150C1F2	8447	50238	74361	0	0	0
Wind angle: -45°	150C1F3	8481	48358	72372	0	0	0
	380C2F1	16843	103562	152051	0	0	0
	380C2F2	16894	100477	148723	0	0	0
	380C2F3	16961	96716	144744	0	0	0
	RTG	0	0	0	0	0	0
NL3/4	GW / opgw	2577	11658	18456	0	0	0
Construction/maintenance, +5°C	150C1F1	8409	37961	60860	0	0	0
Permanent loads yg= 0.9	150C1F2	8416	37613	60617	0	0	0
Wind angle: -45°	150C1F3	8423	37193	60344	0	0	0
	380C2F1	16818	75923	121720	0	0	0
	380C2F2	16831	75226	121234	0	0	0
	380C2F3	16847	74387	120688	0	0	0
	RTG	0	0	0	0	0	0

ZWW4HM400+5

Loadcases for tower strength (Special limit state)

		Ahead			Back		
Loadcase according to 50341-3-15	Att. Point	Vertical [N]	Transversal [N]	Longitudinal [N]	Vertical [N]	Transversal [N]	Longitudinal [N]
NL3/1a	GW / opgw	2552	11153	17805	2552	11153	-17805
Wind, 10°C	150C1F1	9419	39740	64571	9419	39740	-64571
Permanent loads yg= 1.2	150C1F2	9423	39476	64429	9423	39476	-64429
Wind angle: 0°	150C1F3	9429	39158	64272	9429	39158	-64272
	380C2F1	0	0	0	0	0	0
	380C2F2	0	0	0	0	0	0
	380C2F3	0	0	0	0	0	0
	RTG	0	0	0	0	0	0
NL3/1b	GW / opgw	2597	11647	19708	2597	11647	-19708
Wind, -20°C	150C1F1	9580	43143	73416	9580	43143	-73416
Permanent loads yg= 1.2	150C1F2	9581	43088	73417	9581	43088	-73417
Wind angle: 0°	150C1F3	9581	43020	73422	9581	43020	-73422
	380C2F1	0	0	0	0	0	0
	380C2F2	0	0	0	0	0	0
	380C2F3	0	0	0	0	0	0
	RTG	0	0	0	0	0	0
NL3/3	GW / opgw	4264	17601	28095	4264	17601	-28095
Wind, -5°C	150C1F1	10993	46508	76894	10993	46508	-76894
Permanent loads yg= 1.2	150C1F2	10996	46311	76822	10996	46311	-76822
Wind angle: 0°	150C1F3	10999	46071	76746	10999	46071	-76746
	380C2F1	0	0	0	0	0	0
	380C2F2	0	0	0	0	0	0
	380C2F3	0	0	0	0	0	0
	RTG	0	0	0	0	0	0
NL3/4	GW / opgw	3225	12601	21361	3225	12601	-21361
Construction/maintenance, +5°C	150C1F1	10777	42589	72456	10777	42589	-72456
Permanent loads yg= 1.2	150C1F2	10777	42537	72461	10777	42537	-72461
Wind angle: 0°	150C1F3	10777	42472	72471	10777	42472	-72471
	380C2F1	0	0	0	0	0	0
	380C2F2	0	0	0	0	0	0
	380C2F3	0	0	0	0	0	0
	RTG	0	0	0	0	0	0
NL3/1a	GW / opgw	2565	10276	17394	2461	17001	-23796
Wind, 10°C	150C1F1	9449	37542	63884	9163	54340	-78215
Permanent loads yg= 1.2	150C1F2	9450	37497	63889	9190	52571	-76325
Wind angle: 45°	150C1F3	9450	37440	63896	9224	50410	-74057
	380C2F1	0	0	0	0	0	0
	380C2F2	0	0	0	0	0	0
	380C2F3	0	0	0	0	0	0
	RTG	0	0	0	0	0	0
NL3/1b	GW / opgw	2598	11459	19723	2576	12740	-20330
Wind, -20°C	150C1F1	9584	42642	73508	9532	45851	-74527
Permanent loads yg= 1.2	150C1F2	9584	42630	73512	9539	45521	-74316
Wind angle: 45°	150C1F3	9584	42615	73519	9548	45124	-74081
	380C2F1	0	0	0	0	0	0
	380C2F2	0	0	0	0	0	0
	380C2F3	0	0	0	0	0	0
	RTG	0	0	0	0	0	0
NL3/3	GW / opgw	4284	16321	27629	4124	25850	-35846
Wind, -5°C	150C1F1	11014	44816	76643	10779	57342	-85655
Permanent loads yg= 1.2	150C1F2	11014	44779	76650	10805	56002	-84343
Wind angle: 45°	150C1F3	11014	44732	76661	10836	54379	-82799
	380C2F1	0	0	0	0	0	0
	380C2F2	0	0	0	0	0	0
	380C2F3	0	0	0	0	0	0
	RTG	0	0	0	0	0	0
NL3/4	GW / opgw	3226	12425	21395	3211	13548	-21728
Construction/maintenance, +5°C	150C1F1	10779	42104	72575	10741	45090	-73206
Permanent loads yg= 1.2	150C1F2	10779	42092	72580	10746	44791	-73048
Wind angle: 45°	150C1F3	10779	42077	72587	10753	44429	-72875
	380C2F1	0	0	0	0	0	0
	380C2F2	0	0	0	0	0	0
	380C2F3	0	0	0	0	0	0
	RTG	0	0	0	0	0	0
NL3/1a	GW / opgw	2484	15204	21794	2484	15204	-21794
Wind, 10°C	150C1F1	9236	49735	73361	9236	49735	-73361
Permanent loads yg= 1.2	150C1F2	9258	48417	72020	9258	48417	-72020
Wind angle: 90°	150C1F3	9287	46818	70436	9287	46818	-70436
	380C2F1	0	0	0	0	0	0
	380C2F2	0	0	0	0	0	0
	380C2F3	0	0	0	0	0	0
	RTG	0	0	0	0	0	0

NL3/1b	GW / opgw	2583	12391	20066	2583	12391	-20066
Wind, -20°C	150C1F1	9550	45001	74013	9550	45001	-74013
Permanent loads yg= 1.2	150C1F2	9555	44761	73888	9555	44761	-73888
Wind angle: 90°	150C1F3	9560	44472	73751	9560	44472	-73751
	380C2F1	0	0	0	0	0	0
	380C2F2	0	0	0	0	0	0
	380C2F3	0	0	0	0	0	0
	RTG	0	0	0	0	0	0
NL3/3	GW / opgw	4159	23320	33216	4159	23320	-33216
Wind, -5°C	150C1F1	10847	53876	82333	10847	53876	-82333
Permanent loads yg= 1.2	150C1F2	10866	52896	81446	10866	52896	-81446
Wind angle: 90°	150C1F3	10891	51714	80417	10891	51714	-80417
	380C2F1	0	0	0	0	0	0
	380C2F2	0	0	0	0	0	0
	380C2F3	0	0	0	0	0	0
	RTG	0	0	0	0	0	0
NL3/4	GW / opgw	3216	13252	21556	3216	13252	-21556
Construction/maintenance, +5°C	150C1F1	10754	44316	72826	10754	44316	-72826
Permanent loads yg= 1.2	150C1F2	10758	44097	72736	10758	44097	-72736
Wind angle: 90°	150C1F3	10762	43831	72640	10762	43831	-72640
	380C2F1	0	0	0	0	0	0
	380C2F2	0	0	0	0	0	0
	380C2F3	0	0	0	0	0	0
	RTG	0	0	0	0	0	0
NL3/1a	GW / opgw	2461	17001	23796	2565	10276	-17394
Wind, 10°C	150C1F1	9163	54340	78215	9449	37542	-63884
Permanent loads yg= 1.2	150C1F2	9190	52571	76325	9450	37497	-63889
Wind angle: -45°	150C1F3	9224	50410	74057	9450	37440	-63896
	380C2F1	0	0	0	0	0	0
	380C2F2	0	0	0	0	0	0
	380C2F3	0	0	0	0	0	0
	RTG	0	0	0	0	0	0
NL3/1b	GW / opgw	2576	12740	20330	2598	11459	-19723
Wind, -20°C	150C1F1	9532	45851	74527	9584	42642	-73508
Permanent loads yg= 1.2	150C1F2	9539	45521	74316	9584	42630	-73512
Wind angle: -45°	150C1F3	9548	45124	74081	9584	42615	-73519
	380C2F1	0	0	0	0	0	0
	380C2F2	0	0	0	0	0	0
	380C2F3	0	0	0	0	0	0
	RTG	0	0	0	0	0	0
NL3/3	GW / opgw	4124	25850	35846	4284	16321	-27629
Wind, -5°C	150C1F1	10779	57342	85655	11014	44816	-76643
Permanent loads yg= 1.2	150C1F2	10805	56002	84343	11014	44779	-76650
Wind angle: -45°	150C1F3	10836	54379	82799	11014	44732	-76661
	380C2F1	0	0	0	0	0	0
	380C2F2	0	0	0	0	0	0
	380C2F3	0	0	0	0	0	0
	RTG	0	0	0	0	0	0
NL3/4	GW / opgw	3211	13548	21728	3226	12425	-21395
Construction/maintenance, +5°C	150C1F1	10741	45090	73206	10779	42104	-72575
Permanent loads yg= 1.2	150C1F2	10746	44791	73048	10779	42092	-72580
Wind angle: -45°	150C1F3	10753	44429	72875	10779	42077	-72587
	380C2F1	0	0	0	0	0	0
	380C2F2	0	0	0	0	0	0
	380C2F3	0	0	0	0	0	0
	RTG	0	0	0	0	0	0
NL3/1a	GW / opgw	1915	9180	14387	1915	9180	-14387
Wind, 10°C	150C1F1	7081	32383	51830	7081	32383	-51830
Permanent loads yg= 0.9	150C1F2	7087	32068	51599	7087	32068	-51599
Wind angle: 0°	150C1F3	7094	31690	51338	7094	31690	-51338
	380C2F1	0	0	0	0	0	0
	380C2F2	0	0	0	0	0	0
	380C2F3	0	0	0	0	0	0
	RTG	0	0	0	0	0	0
NL3/1b	GW / opgw	1961	9402	15819	1961	9402	-15819
Wind, -20°C	150C1F1	7243	35045	59390	7243	35045	-59390
Permanent loads yg= 0.9	150C1F2	7244	34984	59381	7244	34984	-59381
Wind angle: 0°	150C1F3	7245	34910	59374	7245	34910	-59374
	380C2F1	0	0	0	0	0	0
	380C2F2	0	0	0	0	0	0
	380C2F3	0	0	0	0	0	0
	RTG	0	0	0	0	0	0

NL3/3	GW / opgw	3634	15856	25073	3634	15856	-25073
Wind, -5°C	150C1F1	8663	39148	64147	8663	39148	-64147
Permanent loads yg= 0.9	150C1F2	8667	38922	64025	8667	38922	-64025
Wind angle: 0°	150C1F3	8672	38649	63891	8672	38649	-63891
	380C2F1	0	0	0	0	0	0
	380C2F2	0	0	0	0	0	0
	380C2F3	0	0	0	0	0	0
	RTG	0	0	0	0	0	0
NL3/4	GW / opgw	2595	10591	17879	2595	10591	-17879
Construction/maintenance, +5°C	150C1F1	8455	35123	59524	8455	35123	-59524
Permanent loads yg= 0.9	150C1F2	8455	35066	59523	8455	35066	-59523
Wind angle: 0°	150C1F3	8456	34997	59524	8456	34997	-59524
	380C2F1	0	0	0	0	0	0
	380C2F2	0	0	0	0	0	0
	380C2F3	0	0	0	0	0	0
	RTG	0	0	0	0	0	0
NL3/1a	GW / opgw	1932	8144	13701	1829	15923	-21930
Wind, 10°C	150C1F1	7121	29832	50530	6815	49592	-69994
Permanent loads yg= 0.9	150C1F2	7122	29782	50528	6838	47577	-67677
Wind angle: 45°	150C1F3	7122	29721	50527	6869	45089	-64843
	380C2F1	0	0	0	0	0	0
	380C2F2	0	0	0	0	0	0
	380C2F3	0	0	0	0	0	0
	RTG	0	0	0	0	0	0
NL3/1b	GW / opgw	1963	9195	15802	1934	10716	-16824
Wind, -20°C	150C1F1	7248	34505	59414	7178	38252	-61365
Permanent loads yg= 0.9	150C1F2	7248	34493	59418	7187	37851	-61031
Wind angle: 45°	150C1F3	7248	34477	59424	7198	37369	-60651
	380C2F1	0	0	0	0	0	0
	380C2F2	0	0	0	0	0	0
	380C2F3	0	0	0	0	0	0
	RTG	0	0	0	0	0	0
NL3/3	GW / opgw	3657	14462	24409	3493	24835	-34090
Wind, -5°C	150C1F1	8691	37264	63563	8421	51781	-76025
Permanent loads yg= 0.9	150C1F2	8691	37225	63567	8447	50238	-74361
Wind angle: 45°	150C1F3	8691	37176	63573	8481	48358	-72372
	380C2F1	0	0	0	0	0	0
	380C2F2	0	0	0	0	0	0
	380C2F3	0	0	0	0	0	0
	RTG	0	0	0	0	0	0
NL3/4	GW / opgw	2596	10405	17897	2577	11658	-18456
Construction/maintenance, +5°C	150C1F1	8458	34612	59598	8409	37961	-60860
Permanent loads yg= 0.9	150C1F2	8458	34600	59603	8416	37613	-60617
Wind angle: 45°	150C1F3	8458	34584	59609	8423	37193	-60344
	380C2F1	0	0	0	0	0	0
	380C2F2	0	0	0	0	0	0
	380C2F3	0	0	0	0	0	0
	RTG	0	0	0	0	0	0
NL3/1a	GW / opgw	1846	13927	19581	1846	13927	-19581
Wind, 10°C	150C1F1	6880	44306	63960	6880	44306	-63960
Permanent loads yg= 0.9	150C1F2	6901	42767	62237	6901	42767	-62237
Wind angle: 90°	150C1F3	6930	40884	60161	6930	40884	-60161
	380C2F1	0	0	0	0	0	0
	380C2F2	0	0	0	0	0	0
	380C2F3	0	0	0	0	0	0
	RTG	0	0	0	0	0	0
NL3/1b	GW / opgw	1943	10289	16426	1943	10289	-16426
Wind, -20°C	150C1F1	7201	37221	60539	7201	37221	-60539
Permanent loads yg= 0.9	150C1F2	7208	36933	60329	7208	36933	-60329
Wind angle: 90°	150C1F3	7215	36586	60094	7215	36586	-60094
	380C2F1	0	0	0	0	0	0
	380C2F2	0	0	0	0	0	0
	380C2F3	0	0	0	0	0	0
	RTG	0	0	0	0	0	0
NL3/3	GW / opgw	3525	22131	31158	3525	22131	-31158
Wind, -5°C	150C1F1	8491	47772	71763	8491	47772	-71763
Permanent loads yg= 0.9	150C1F2	8513	46628	70591	8513	46628	-70591
Wind angle: 90°	150C1F3	8540	45243	69211	8540	45243	-69211
	380C2F1	0	0	0	0	0	0
	380C2F2	0	0	0	0	0	0
	380C2F3	0	0	0	0	0	0
	RTG	0	0	0	0	0	0

NL3/4	GW / opgw	2583	11319	18208	2583	11319	-18208
Construction/maintenance, +5°C	150C1F1	8426	37064	60264	8426	37064	-60264
Permanent loads yg= 0.9	150C1F2	8430	36811	60117	8430	36811	-60117
Wind angle: 90°	150C1F3	8435	36507	59954	8435	36507	-59954
	380C2F1	0	0	0	0	0	0
	380C2F2	0	0	0	0	0	0
	380C2F3	0	0	0	0	0	0
	RTG	0	0	0	0	0	0
NL3/1a	GW / opgw	1829	15923	21930	1932	8144	-13701
Wind, 10°C	150C1F1	6815	49592	69994	7121	29832	-50530
Permanent loads yg= 0.9	150C1F2	6838	47577	67677	7122	29782	-50528
Wind angle: -45°	150C1F3	6869	45089	64843	7122	29721	-50527
	380C2F1	0	0	0	0	0	0
	380C2F2	0	0	0	0	0	0
	380C2F3	0	0	0	0	0	0
	RTG	0	0	0	0	0	0
NL3/1b	GW / opgw	1934	10716	16824	1963	9195	-15802
Wind, -20°C	150C1F1	7178	38252	61365	7248	34505	-59414
Permanent loads yg= 0.9	150C1F2	7187	37851	61031	7248	34493	-59418
Wind angle: -45°	150C1F3	7198	37369	60651	7248	34477	-59424
	380C2F1	0	0	0	0	0	0
	380C2F2	0	0	0	0	0	0
	380C2F3	0	0	0	0	0	0
	RTG	0	0	0	0	0	0
NL3/3	GW / opgw	3493	24835	34090	3657	14462	-24409
Wind, -5°C	150C1F1	8421	51781	76025	8691	37264	-63563
Permanent loads yg= 0.9	150C1F2	8447	50238	74361	8691	37225	-63567
Wind angle: -45°	150C1F3	8481	48358	72372	8691	37176	-63573
	380C2F1	0	0	0	0	0	0
	380C2F2	0	0	0	0	0	0
	380C2F3	0	0	0	0	0	0
	RTG	0	0	0	0	0	0
NL3/4	GW / opgw	2577	11658	18456	2596	10405	-17897
Construction/maintenance, +5°C	150C1F1	8409	37961	60860	8458	34612	-59598
Permanent loads yg= 0.9	150C1F2	8416	37613	60617	8458	34600	-59603
Wind angle: -45°	150C1F3	8423	37193	60344	8458	34584	-59609
	380C2F1	0	0	0	0	0	0
	380C2F2	0	0	0	0	0	0
	380C2F3	0	0	0	0	0	0
	RTG	0	0	0	0	0	0

ZWW4HM400+5

Loadcases for tower strength (Special limit state)

		Ahead			Back		
Loadcase according to 50341-3-15	Att. Point	Vertical [N]	Transversal [N]	Longitudinal [N]	Vertical [N]	Transversal [N]	Longitudinal [N]
NL3/1a	GW / opgw	0	0	0	0	0	0
Wind, 10°C	150C1F1	0	0	0	0	0	0
Permanent loads yg= 1.2	150C1F2	0	0	0	0	0	0
Wind angle: 0°	150C1F3	0	0	0	0	0	0
	380C2F1	18838	79480	129142	18838	79480	-129142
	380C2F2	18847	78952	128857	18847	78952	-128857
	380C2F3	18857	78315	128544	18857	78315	-128544
	RTG	0	0	0	5112	21390	-35017
NL3/1b	GW / opgw	0	0	0	0	0	0
Wind, -20°C	150C1F1	0	0	0	0	0	0
Permanent loads yg= 1.2	150C1F2	0	0	0	0	0	0
Wind angle: 0°	150C1F3	0	0	0	0	0	0
	380C2F1	19160	86286	146831	19160	86286	-146831
	380C2F2	19162	86176	146834	19162	86176	-146834
	380C2F3	19163	86041	146843	19163	86041	-146843
	RTG	0	0	0	5183	22900	-39040
NL3/3	GW / opgw	0	0	0	0	0	0
Wind, -5°C	150C1F1	0	0	0	0	0	0
Permanent loads yg= 1.2	150C1F2	0	0	0	0	0	0
Wind angle: 0°	150C1F3	0	0	0	0	0	0
	380C2F1	21985	93017	153789	21985	93017	-153789
	380C2F2	21991	92622	153644	21991	92622	-153644
	380C2F3	21999	92141	153491	21999	92141	-153491
	RTG	0	0	0	8550	33841	-55415
NL3/4	GW / opgw	0	0	0	0	0	0
Construction/maintenance, +5°C	150C1F1	0	0	0	0	0	0
Permanent loads yg= 1.2	150C1F2	0	0	0	0	0	0
Wind angle: 0°	150C1F3	0	0	0	0	0	0
	380C2F1	21553	85178	144911	21553	85178	-144911
	380C2F2	21554	85073	144923	21554	85073	-144923
	380C2F3	21555	84943	144941	21555	84943	-144941
	RTG	0	0	0	6443	24997	-42671
NL3/1a	GW / opgw	0	0	0	0	0	0
Wind, 10°C	150C1F1	0	0	0	0	0	0
Permanent loads yg= 1.2	150C1F2	0	0	0	0	0	0
Wind angle: 45°	150C1F3	0	0	0	0	0	0
	380C2F1	18898	75085	127768	18326	108679	-156431
	380C2F2	18899	74993	127777	18380	105142	-152649
	380C2F3	18900	74880	127792	18449	100820	-148114
	RTG	0	0	0	4994	28099	-41087
NL3/1b	GW / opgw	0	0	0	0	0	0
Wind, -20°C	150C1F1	0	0	0	0	0	0
Permanent loads yg= 1.2	150C1F2	0	0	0	0	0	0
Wind angle: 45°	150C1F3	0	0	0	0	0	0
	380C2F1	19168	85285	147015	19065	91702	-149053
	380C2F2	19168	85260	147025	19079	91042	-148632
	380C2F3	19168	85230	147037	19095	90248	-148162
	RTG	0	0	0	5164	24142	-39484
NL3/3	GW / opgw	0	0	0	0	0	0
Wind, -5°C	150C1F1	0	0	0	0	0	0
Permanent loads yg= 1.2	150C1F2	0	0	0	0	0	0
Wind angle: 45°	150C1F3	0	0	0	0	0	0
	380C2F1	22027	89632	153285	21558	114684	-171311
	380C2F2	22028	89557	153301	21609	112005	-168685
	380C2F3	22028	89465	153323	21673	108759	-165599
	RTG	0	0	0	8372	43299	-63052
NL3/4	GW / opgw	0	0	0	0	0	0
Construction/maintenance, +5°C	150C1F1	0	0	0	0	0	0
Permanent loads yg= 1.2	150C1F2	0	0	0	0	0	0
Wind angle: 45°	150C1F3	0	0	0	0	0	0
	380C2F1	21558	84208	145150	21483	90180	-146412
	380C2F2	21558	84184	145160	21493	89582	-146097
	380C2F3	21559	84154	145174	21505	88858	-145750
	RTG	0	0	0	6430	26100	-42874
NL3/1a	GW / opgw	0	0	0	0	0	0
Wind, 10°C	150C1F1	0	0	0	0	0	0
Permanent loads yg= 1.2	150C1F2	0	0	0	0	0	0
Wind angle: 90°	150C1F3	0	0	0	0	0	0
	380C2F1	18471	99471	146722	18471	99471	-146722
	380C2F2	18516	96834	144041	18516	96834	-144041
	380C2F3	18573	93636	140873	18573	93636	-140873
	RTG	0	0	0	5029	25959	-38867

NL3/1b	GW / opgw	0	0	0	0	0	0
Wind, -20°C	150C1F1	0	0	0	0	0	0
Permanent loads yg= 1.2	150C1F2	0	0	0	0	0	0
Wind angle: 90°	150C1F3	0	0	0	0	0	0
	380C2F1	19100	90001	148026	19100	90001	-148026
	380C2F2	19109	89522	147776	19109	89522	-147776
	380C2F3	19120	88943	147502	19120	88943	-147502
	RTG	0	0	0	5171	23755	-39270
NL3/3	GW / opgw	0	0	0	0	0	0
Wind, -5°C	150C1F1	0	0	0	0	0	0
Permanent loads yg= 1.2	150C1F2	0	0	0	0	0	0
Wind angle: 90°	150C1F3	0	0	0	0	0	0
	380C2F1	21693	107752	164666	21693	107752	-164666
	380C2F2	21733	105792	162891	21733	105792	-162891
	380C2F3	21781	103428	160834	21781	103428	-160834
	RTG	0	0	0	8426	40301	-60203
NL3/4	GW / opgw	0	0	0	0	0	0
Construction/maintenance, +5°C	150C1F1	0	0	0	0	0	0
Permanent loads yg= 1.2	150C1F2	0	0	0	0	0	0
Wind angle: 90°	150C1F3	0	0	0	0	0	0
	380C2F1	21509	88633	145651	21509	88633	-145651
	380C2F2	21516	88194	145472	21516	88194	-145472
	380C2F3	21524	87662	145280	21524	87662	-145280
	RTG	0	0	0	6435	25765	-42750
NL3/1a	GW / opgw	0	0	0	0	0	0
Wind, 10°C	150C1F1	0	0	0	0	0	0
Permanent loads yg= 1.2	150C1F2	0	0	0	0	0	0
Wind angle: -45°	150C1F3	0	0	0	0	0	0
	380C2F1	18326	108679	156431	18898	75085	-127768
	380C2F2	18380	105142	152649	18899	74993	-127777
	380C2F3	18449	100820	148114	18900	74880	-127792
	RTG	0	0	0	5124	20380	-34754
NL3/1b	GW / opgw	0	0	0	0	0	0
Wind, -20°C	150C1F1	0	0	0	0	0	0
Permanent loads yg= 1.2	150C1F2	0	0	0	0	0	0
Wind angle: -45°	150C1F3	0	0	0	0	0	0
	380C2F1	19065	91702	149053	19168	85285	-147015
	380C2F2	19079	91042	148632	19168	85260	-147025
	380C2F3	19095	90248	148162	19168	85230	-147037
	RTG	0	0	0	5185	22666	-39091
NL3/3	GW / opgw	0	0	0	0	0	0
Wind, -5°C	150C1F1	0	0	0	0	0	0
Permanent loads yg= 1.2	150C1F2	0	0	0	0	0	0
Wind angle: -45°	150C1F3	0	0	0	0	0	0
	380C2F1	21558	114684	171311	22027	89632	-153285
	380C2F2	21609	112005	168685	22028	89557	-153301
	380C2F3	21673	108759	165599	22028	89465	-153323
	RTG	0	0	0	8568	32350	-55175
NL3/4	GW / opgw	0	0	0	0	0	0
Construction/maintenance, +5°C	150C1F1	0	0	0	0	0	0
Permanent loads yg= 1.2	150C1F2	0	0	0	0	0	0
Wind angle: -45°	150C1F3	0	0	0	0	0	0
	380C2F1	21483	90180	146412	21558	84208	-145150
	380C2F2	21493	89582	146097	21558	84184	-145160
	380C2F3	21505	88858	145750	21559	84154	-145174
	RTG	0	0	0	6444	24773	-42740
NL3/1a	GW / opgw	0	0	0	0	0	0
Wind, 10°C	150C1F1	0	0	0	0	0	0
Permanent loads yg= 0.9	150C1F2	0	0	0	0	0	0
Wind angle: 0°	150C1F3	0	0	0	0	0	0
	380C2F1	14162	64767	103661	14162	64767	-103661
	380C2F2	14174	64137	103198	14174	64137	-103198
	380C2F3	14187	63379	102675	14187	63379	-102675
	RTG	0	0	0	3843	17260	-27865
NL3/1b	GW / opgw	0	0	0	0	0	0
Wind, -20°C	150C1F1	0	0	0	0	0	0
Permanent loads yg= 0.9	150C1F2	0	0	0	0	0	0
Wind angle: 0°	150C1F3	0	0	0	0	0	0
	380C2F1	14486	70090	118780	14486	70090	-118780
	380C2F2	14487	69968	118762	14487	69968	-118762
	380C2F3	14489	69819	118747	14489	69819	-118747
	RTG	0	0	0	3914	18394	-31236

NL3/3	GW / opgw	0	0	0	0	0	0
Wind, -5°C	150C1F1	0	0	0	0	0	0
Permanent loads yg= 0.9	150C1F2	0	0	0	0	0	0
Wind angle: 0°	150C1F3	0	0	0	0	0	0
	380C2F1	17326	78296	128293	17326	78296	-128293
	380C2F2	17334	77844	128050	17334	77844	-128050
	380C2F3	17344	77298	127782	17344	77298	-127782
	RTG	0	0	0	7295	30218	-49140
NL3/4	GW / opgw	0	0	0	0	0	0
Construction/maintenance, +5°C	150C1F1	0	0	0	0	0	0
Permanent loads yg= 0.9	150C1F2	0	0	0	0	0	0
Wind angle: 0°	150C1F3	0	0	0	0	0	0
	380C2F1	16909	70245	119047	16909	70245	-119047
	380C2F2	16910	70133	119045	16910	70133	-119045
	380C2F3	16912	69994	119048	16912	69994	-119048
	RTG	0	0	0	5185	20962	-35683
NL3/1a	GW / opgw	0	0	0	0	0	0
Wind, 10°C	150C1F1	0	0	0	0	0	0
Permanent loads yg= 0.9	150C1F2	0	0	0	0	0	0
Wind angle: 45°	150C1F3	0	0	0	0	0	0
	380C2F1	14243	59665	101060	13629	99184	-139988
	380C2F2	14244	59565	101055	13675	95154	-135355
	380C2F3	14245	59442	101054	13738	90178	-129687
	RTG	0	0	0	3716	25224	-36107
NL3/1b	GW / opgw	0	0	0	0	0	0
Wind, -20°C	150C1F1	0	0	0	0	0	0
Permanent loads yg= 0.9	150C1F2	0	0	0	0	0	0
Wind angle: 45°	150C1F3	0	0	0	0	0	0
	380C2F1	14496	69011	118828	14356	76503	-122731
	380C2F2	14496	68985	118836	14374	75701	-122063
	380C2F3	14496	68954	118847	14396	74739	-121302
	RTG	0	0	0	3888	19852	-32053
NL3/3	GW / opgw	0	0	0	0	0	0
Wind, -5°C	150C1F1	0	0	0	0	0	0
Permanent loads yg= 0.9	150C1F2	0	0	0	0	0	0
Wind angle: 45°	150C1F3	0	0	0	0	0	0
	380C2F1	17381	74528	127125	16843	103562	-152051
	380C2F2	17382	74449	127133	16894	100477	-148723
	380C2F3	17382	74352	127147	16961	96716	-144744
	RTG	0	0	0	7104	40646	-58458
NL3/4	GW / opgw	0	0	0	0	0	0
Construction/maintenance, +5°C	150C1F1	0	0	0	0	0	0
Permanent loads yg= 0.9	150C1F2	0	0	0	0	0	0
Wind angle: 45°	150C1F3	0	0	0	0	0	0
	380C2F1	16916	69224	119196	16818	75923	-121720
	380C2F2	16916	69199	119206	16831	75226	-121234
	380C2F3	16916	69168	119218	16847	74387	-120688
	RTG	0	0	0	5168	22180	-36085
NL3/1a	GW / opgw	0	0	0	0	0	0
Wind, 10°C	150C1F1	0	0	0	0	0	0
Permanent loads yg= 0.9	150C1F2	0	0	0	0	0	0
Wind angle: 90°	150C1F3	0	0	0	0	0	0
	380C2F1	13759	88613	127920	13759	88613	-127920
	380C2F2	13803	85535	124474	13803	85535	-124474
	380C2F3	13859	81768	120321	13859	81768	-120321
	RTG	0	0	0	3750	22733	-33281
NL3/1b	GW / opgw	0	0	0	0	0	0
Wind, -20°C	150C1F1	0	0	0	0	0	0
Permanent loads yg= 0.9	150C1F2	0	0	0	0	0	0
Wind angle: 90°	150C1F3	0	0	0	0	0	0
	380C2F1	14402	74442	121078	14402	74442	-121078
	380C2F2	14415	73865	120659	14415	73865	-120659
	380C2F3	14430	73172	120187	14430	73172	-120187
	RTG	0	0	0	3897	19385	-31702
NL3/3	GW / opgw	0	0	0	0	0	0
Wind, -5°C	150C1F1	0	0	0	0	0	0
Permanent loads yg= 0.9	150C1F2	0	0	0	0	0	0
Wind angle: 90°	150C1F3	0	0	0	0	0	0
	380C2F1	16983	95544	143525	16983	95544	-143525
	380C2F2	17026	93256	141182	17026	93256	-141182
	380C2F3	17080	90486	138422	17080	90486	-138422
	RTG	0	0	0	7158	37363	-55115

NL3/4	GW / opgw	0	0	0	0	0	0
Construction/maintenance, +5°C	150C1F1	0	0	0	0	0	0
Permanent loads yg= 0.9	150C1F2	0	0	0	0	0	0
Wind angle: 90°	150C1F3	0	0	0	0	0	0
	380C2F1	16851	74127	120529	16851	74127	-120529
	380C2F2	16860	73623	120235	16860	73623	-120235
	380C2F3	16871	73014	119909	16871	73014	-119909
	RTG	0	0	0	5174	21802	-35887
NL3/1a	GW / opgw	0	0	0	0	0	0
Wind, 10°C	150C1F1	0	0	0	0	0	0
Permanent loads yg= 0.9	150C1F2	0	0	0	0	0	0
Wind angle: -45°	150C1F3	0	0	0	0	0	0
	380C2F1	13629	99184	139988	14243	59665	-101060
	380C2F2	13675	95154	135355	14244	59565	-101055
	380C2F3	13738	90178	129687	14245	59442	-101054
	RTG	0	0	0	3860	16098	-27338
NL3/1b	GW / opgw	0	0	0	0	0	0
Wind, -20°C	150C1F1	0	0	0	0	0	0
Permanent loads yg= 0.9	150C1F2	0	0	0	0	0	0
Wind angle: -45°	150C1F3	0	0	0	0	0	0
	380C2F1	14356	76503	122731	14496	69011	-118828
	380C2F2	14374	75701	122063	14496	68985	-118836
	380C2F3	14396	74739	121302	14496	68954	-118847
	RTG	0	0	0	3916	18143	-31257
NL3/3	GW / opgw	0	0	0	0	0	0
Wind, -5°C	150C1F1	0	0	0	0	0	0
Permanent loads yg= 0.9	150C1F2	0	0	0	0	0	0
Wind angle: -45°	150C1F3	0	0	0	0	0	0
	380C2F1	16843	103562	152051	17381	74528	-127125
	380C2F2	16894	100477	148723	17382	74449	-127133
	380C2F3	16961	96716	144744	17382	74352	-127147
	RTG	0	0	0	7317	28620	-48714
NL3/4	GW / opgw	0	0	0	0	0	0
Construction/maintenance, +5°C	150C1F1	0	0	0	0	0	0
Permanent loads yg= 0.9	150C1F2	0	0	0	0	0	0
Wind angle: -45°	150C1F3	0	0	0	0	0	0
	380C2F1	16818	75923	121720	16916	69224	-119196
	380C2F2	16831	75226	121234	16916	69199	-119206
	380C2F3	16847	74387	120688	16916	69168	-119218
	RTG	0	0	0	5186	20729	-35737

ZWW4HM400+5

Loadcases for tower strength (Special limit state)

		Ahead			Back		
Loadcase according to 50341-3-15	Att. Point	Vertical [N]	Transversal [N]	Longitudinal [N]	Vertical [N]	Transversal [N]	Longitudinal [N]
NL3/1a	GW / opgw	0	0	0	0	0	0
Wind, 10°C	150C1F1	0	0	0	0	0	0
Permanent loads yg= 1.2	150C1F2	0	0	0	0	0	0
Wind angle: 0°	150C1F3	0	0	0	0	0	0
	380C2F1	18838	79480	129142	18838	79480	-129142
	380C2F2	18847	78952	128857	18847	78952	-128857
	380C2F3	18857	78315	128544	18857	78315	-128544
	RTG	0	0	0	5112	21390	-35017
NL3/1b	GW / opgw	0	0	0	0	0	0
Wind, -20°C	150C1F1	0	0	0	0	0	0
Permanent loads yg= 1.2	150C1F2	0	0	0	0	0	0
Wind angle: 0°	150C1F3	0	0	0	0	0	0
	380C2F1	19160	86286	146831	19160	86286	-146831
	380C2F2	19162	86176	146834	19162	86176	-146834
	380C2F3	19163	86041	146843	19163	86041	-146843
	RTG	0	0	0	5183	22900	-39040
NL3/3	GW / opgw	0	0	0	0	0	0
Wind, -5°C	150C1F1	0	0	0	0	0	0
Permanent loads yg= 1.2	150C1F2	0	0	0	0	0	0
Wind angle: 0°	150C1F3	0	0	0	0	0	0
	380C2F1	21985	93017	153789	21985	93017	-153789
	380C2F2	21991	92622	153644	21991	92622	-153644
	380C2F3	21999	92141	153491	21999	92141	-153491
	RTG	0	0	0	8550	33841	-55415
NL3/4	GW / opgw	0	0	0	0	0	0
Construction/maintenance, +5°C	150C1F1	0	0	0	0	0	0
Permanent loads yg= 1.2	150C1F2	0	0	0	0	0	0
Wind angle: 0°	150C1F3	0	0	0	0	0	0
	380C2F1	21553	85178	144911	21553	85178	-144911
	380C2F2	21554	85073	144923	21554	85073	-144923
	380C2F3	21555	84943	144941	21555	84943	-144941
	RTG	0	0	0	6443	24997	-42671
NL3/1a	GW / opgw	0	0	0	0	0	0
Wind, 10°C	150C1F1	0	0	0	0	0	0
Permanent loads yg= 1.2	150C1F2	0	0	0	0	0	0
Wind angle: 45°	150C1F3	0	0	0	0	0	0
	380C2F1	18898	75085	127768	18326	108679	-156431
	380C2F2	18899	74993	127777	18380	105142	-152649
	380C2F3	18900	74880	127792	18449	100820	-148114
	RTG	0	0	0	4994	28099	-41087
NL3/1b	GW / opgw	0	0	0	0	0	0
Wind, -20°C	150C1F1	0	0	0	0	0	0
Permanent loads yg= 1.2	150C1F2	0	0	0	0	0	0
Wind angle: 45°	150C1F3	0	0	0	0	0	0
	380C2F1	19168	85285	147015	19065	91702	-149053
	380C2F2	19168	85260	147025	19079	91042	-148632
	380C2F3	19168	85230	147037	19095	90248	-148162
	RTG	0	0	0	5164	24142	-39484
NL3/3	GW / opgw	0	0	0	0	0	0
Wind, -5°C	150C1F1	0	0	0	0	0	0
Permanent loads yg= 1.2	150C1F2	0	0	0	0	0	0
Wind angle: 45°	150C1F3	0	0	0	0	0	0
	380C2F1	22027	89632	153285	21558	114684	-171311
	380C2F2	22028	89557	153301	21609	112005	-168685
	380C2F3	22028	89465	153323	21673	108759	-165599
	RTG	0	0	0	8372	43299	-63052
NL3/4	GW / opgw	0	0	0	0	0	0
Construction/maintenance, +5°C	150C1F1	0	0	0	0	0	0
Permanent loads yg= 1.2	150C1F2	0	0	0	0	0	0
Wind angle: 45°	150C1F3	0	0	0	0	0	0
	380C2F1	21558	84208	145150	21483	90180	-146412
	380C2F2	21558	84184	145160	21493	89582	-146097
	380C2F3	21559	84154	145174	21505	88858	-145750
	RTG	0	0	0	6430	26100	-42874
NL3/1a	GW / opgw	0	0	0	0	0	0
Wind, 10°C	150C1F1	0	0	0	0	0	0
Permanent loads yg= 1.2	150C1F2	0	0	0	0	0	0
Wind angle: 90°	150C1F3	0	0	0	0	0	0
	380C2F1	18471	99471	146722	18471	99471	-146722
	380C2F2	18516	96834	144041	18516	96834	-144041
	380C2F3	18573	93636	140873	18573	93636	-140873
	RTG	0	0	0	5029	25959	-38867

NL3/1b	GW / opgw	0	0	0	0	0	0
Wind, -20°C	150C1F1	0	0	0	0	0	0
Permanent loads yg= 1.2	150C1F2	0	0	0	0	0	0
Wind angle: 90°	150C1F3	0	0	0	0	0	0
	380C2F1	19100	90001	148026	19100	90001	-148026
	380C2F2	19109	89522	147776	19109	89522	-147776
	380C2F3	19120	88943	147502	19120	88943	-147502
	RTG	0	0	0	5171	23755	-39270
NL3/3	GW / opgw	0	0	0	0	0	0
Wind, -5°C	150C1F1	0	0	0	0	0	0
Permanent loads yg= 1.2	150C1F2	0	0	0	0	0	0
Wind angle: 90°	150C1F3	0	0	0	0	0	0
	380C2F1	21693	107752	164666	21693	107752	-164666
	380C2F2	21733	105792	162891	21733	105792	-162891
	380C2F3	21781	103428	160834	21781	103428	-160834
	RTG	0	0	0	8426	40301	-60203
NL3/4	GW / opgw	0	0	0	0	0	0
Construction/maintenance, +5°C	150C1F1	0	0	0	0	0	0
Permanent loads yg= 1.2	150C1F2	0	0	0	0	0	0
Wind angle: 90°	150C1F3	0	0	0	0	0	0
	380C2F1	21509	88633	145651	21509	88633	-145651
	380C2F2	21516	88194	145472	21516	88194	-145472
	380C2F3	21524	87662	145280	21524	87662	-145280
	RTG	0	0	0	6435	25765	-42750
NL3/1a	GW / opgw	0	0	0	0	0	0
Wind, 10°C	150C1F1	0	0	0	0	0	0
Permanent loads yg= 1.2	150C1F2	0	0	0	0	0	0
Wind angle: -45°	150C1F3	0	0	0	0	0	0
	380C2F1	18326	108679	156431	18898	75085	-127768
	380C2F2	18380	105142	152649	18899	74993	-127777
	380C2F3	18449	100820	148114	18900	74880	-127792
	RTG	0	0	0	5124	20380	-34754
NL3/1b	GW / opgw	0	0	0	0	0	0
Wind, -20°C	150C1F1	0	0	0	0	0	0
Permanent loads yg= 1.2	150C1F2	0	0	0	0	0	0
Wind angle: -45°	150C1F3	0	0	0	0	0	0
	380C2F1	19065	91702	149053	19168	85285	-147015
	380C2F2	19079	91042	148632	19168	85260	-147025
	380C2F3	19095	90248	148162	19168	85230	-147037
	RTG	0	0	0	5185	22666	-39091
NL3/3	GW / opgw	0	0	0	0	0	0
Wind, -5°C	150C1F1	0	0	0	0	0	0
Permanent loads yg= 1.2	150C1F2	0	0	0	0	0	0
Wind angle: -45°	150C1F3	0	0	0	0	0	0
	380C2F1	21558	114684	171311	22027	89632	-153285
	380C2F2	21609	112005	168685	22028	89557	-153301
	380C2F3	21673	108759	165599	22028	89465	-153323
	RTG	0	0	0	8568	32350	-55175
NL3/4	GW / opgw	0	0	0	0	0	0
Construction/maintenance, +5°C	150C1F1	0	0	0	0	0	0
Permanent loads yg= 1.2	150C1F2	0	0	0	0	0	0
Wind angle: -45°	150C1F3	0	0	0	0	0	0
	380C2F1	21483	90180	146412	21558	84208	-145150
	380C2F2	21493	89582	146097	21558	84184	-145160
	380C2F3	21505	88858	145750	21559	84154	-145174
	RTG	0	0	0	6444	24773	-42740
NL3/1a	GW / opgw	0	0	0	0	0	0
Wind, 10°C	150C1F1	0	0	0	0	0	0
Permanent loads yg= 0.9	150C1F2	0	0	0	0	0	0
Wind angle: 0°	150C1F3	0	0	0	0	0	0
	380C2F1	14162	64767	103661	14162	64767	-103661
	380C2F2	14174	64137	103198	14174	64137	-103198
	380C2F3	14187	63379	102675	14187	63379	-102675
	RTG	0	0	0	3843	17260	-27865
NL3/1b	GW / opgw	0	0	0	0	0	0
Wind, -20°C	150C1F1	0	0	0	0	0	0
Permanent loads yg= 0.9	150C1F2	0	0	0	0	0	0
Wind angle: 0°	150C1F3	0	0	0	0	0	0
	380C2F1	14486	70090	118780	14486	70090	-118780
	380C2F2	14487	69968	118762	14487	69968	-118762
	380C2F3	14489	69819	118747	14489	69819	-118747
	RTG	0	0	0	3914	18394	-31236

NL3/3	GW / opgw	0	0	0	0	0	0
Wind, -5°C	150C1F1	0	0	0	0	0	0
Permanent loads yg= 0.9	150C1F2	0	0	0	0	0	0
Wind angle: 0°	150C1F3	0	0	0	0	0	0
	380C2F1	17326	78296	128293	17326	78296	-128293
	380C2F2	17334	77844	128050	17334	77844	-128050
	380C2F3	17344	77298	127782	17344	77298	-127782
	RTG	0	0	0	7295	30218	-49140
NL3/4	GW / opgw	0	0	0	0	0	0
Construction/maintenance, +5°C	150C1F1	0	0	0	0	0	0
Permanent loads yg= 0.9	150C1F2	0	0	0	0	0	0
Wind angle: 0°	150C1F3	0	0	0	0	0	0
	380C2F1	16909	70245	119047	16909	70245	-119047
	380C2F2	16910	70133	119045	16910	70133	-119045
	380C2F3	16912	69994	119048	16912	69994	-119048
	RTG	0	0	0	5185	20962	-35683
NL3/1a	GW / opgw	0	0	0	0	0	0
Wind, 10°C	150C1F1	0	0	0	0	0	0
Permanent loads yg= 0.9	150C1F2	0	0	0	0	0	0
Wind angle: 45°	150C1F3	0	0	0	0	0	0
	380C2F1	14243	59665	101060	13629	99184	-139988
	380C2F2	14244	59565	101055	13675	95154	-135355
	380C2F3	14245	59442	101054	13738	90178	-129687
	RTG	0	0	0	3716	25224	-36107
NL3/1b	GW / opgw	0	0	0	0	0	0
Wind, -20°C	150C1F1	0	0	0	0	0	0
Permanent loads yg= 0.9	150C1F2	0	0	0	0	0	0
Wind angle: 45°	150C1F3	0	0	0	0	0	0
	380C2F1	14496	69011	118828	14356	76503	-122731
	380C2F2	14496	68985	118836	14374	75701	-122063
	380C2F3	14496	68954	118847	14396	74739	-121302
	RTG	0	0	0	3888	19852	-32053
NL3/3	GW / opgw	0	0	0	0	0	0
Wind, -5°C	150C1F1	0	0	0	0	0	0
Permanent loads yg= 0.9	150C1F2	0	0	0	0	0	0
Wind angle: 45°	150C1F3	0	0	0	0	0	0
	380C2F1	17381	74528	127125	16843	103562	-152051
	380C2F2	17382	74449	127133	16894	100477	-148723
	380C2F3	17382	74352	127147	16961	96716	-144744
	RTG	0	0	0	7104	40646	-58458
NL3/4	GW / opgw	0	0	0	0	0	0
Construction/maintenance, +5°C	150C1F1	0	0	0	0	0	0
Permanent loads yg= 0.9	150C1F2	0	0	0	0	0	0
Wind angle: 45°	150C1F3	0	0	0	0	0	0
	380C2F1	16916	69224	119196	16818	75923	-121720
	380C2F2	16916	69199	119206	16831	75226	-121234
	380C2F3	16916	69168	119218	16847	74387	-120688
	RTG	0	0	0	5168	22180	-36085
NL3/1a	GW / opgw	0	0	0	0	0	0
Wind, 10°C	150C1F1	0	0	0	0	0	0
Permanent loads yg= 0.9	150C1F2	0	0	0	0	0	0
Wind angle: 90°	150C1F3	0	0	0	0	0	0
	380C2F1	13759	88613	127920	13759	88613	-127920
	380C2F2	13803	85535	124474	13803	85535	-124474
	380C2F3	13859	81768	120321	13859	81768	-120321
	RTG	0	0	0	3750	22733	-33281
NL3/1b	GW / opgw	0	0	0	0	0	0
Wind, -20°C	150C1F1	0	0	0	0	0	0
Permanent loads yg= 0.9	150C1F2	0	0	0	0	0	0
Wind angle: 90°	150C1F3	0	0	0	0	0	0
	380C2F1	14402	74442	121078	14402	74442	-121078
	380C2F2	14415	73865	120659	14415	73865	-120659
	380C2F3	14430	73172	120187	14430	73172	-120187
	RTG	0	0	0	3897	19385	-31702
NL3/3	GW / opgw	0	0	0	0	0	0
Wind, -5°C	150C1F1	0	0	0	0	0	0
Permanent loads yg= 0.9	150C1F2	0	0	0	0	0	0
Wind angle: 90°	150C1F3	0	0	0	0	0	0
	380C2F1	16983	95544	143525	16983	95544	-143525
	380C2F2	17026	93256	141182	17026	93256	-141182
	380C2F3	17080	90486	138422	17080	90486	-138422
	RTG	0	0	0	7158	37363	-55115

NL3/4	GW / opgw	0	0	0	0	0	0
Construction/maintenance, +5°C	150C1F1	0	0	0	0	0	0
Permanent loads yg= 0.9	150C1F2	0	0	0	0	0	0
Wind angle: 90°	150C1F3	0	0	0	0	0	0
	380C2F1	16851	74127	120529	16851	74127	-120529
	380C2F2	16860	73623	120235	16860	73623	-120235
	380C2F3	16871	73014	119909	16871	73014	-119909
	RTG	0	0	0	5174	21802	-35887
NL3/1a	GW / opgw	0	0	0	0	0	0
Wind, 10°C	150C1F1	0	0	0	0	0	0
Permanent loads yg= 0.9	150C1F2	0	0	0	0	0	0
Wind angle: -45°	150C1F3	0	0	0	0	0	0
	380C2F1	13629	99184	139988	14243	59665	-101060
	380C2F2	13675	95154	135355	14244	59565	-101055
	380C2F3	13738	90178	129687	14245	59442	-101054
	RTG	0	0	0	3860	16098	-27338
NL3/1b	GW / opgw	0	0	0	0	0	0
Wind, -20°C	150C1F1	0	0	0	0	0	0
Permanent loads yg= 0.9	150C1F2	0	0	0	0	0	0
Wind angle: -45°	150C1F3	0	0	0	0	0	0
	380C2F1	14356	76503	122731	14496	69011	-118828
	380C2F2	14374	75701	122063	14496	68985	-118836
	380C2F3	14396	74739	121302	14496	68954	-118847
	RTG	0	0	0	3916	18143	-31257
NL3/3	GW / opgw	0	0	0	0	0	0
Wind, -5°C	150C1F1	0	0	0	0	0	0
Permanent loads yg= 0.9	150C1F2	0	0	0	0	0	0
Wind angle: -45°	150C1F3	0	0	0	0	0	0
	380C2F1	16843	103562	152051	17381	74528	-127125
	380C2F2	16894	100477	148723	17382	74449	-127133
	380C2F3	16961	96716	144744	17382	74352	-127147
	RTG	0	0	0	7317	28620	-48714
NL3/4	GW / opgw	0	0	0	0	0	0
Construction/maintenance, +5°C	150C1F1	0	0	0	0	0	0
Permanent loads yg= 0.9	150C1F2	0	0	0	0	0	0
Wind angle: -45°	150C1F3	0	0	0	0	0	0
	380C2F1	16818	75923	121720	16916	69224	-119196
	380C2F2	16831	75226	121234	16916	69199	-119206
	380C2F3	16847	74387	120688	16916	69168	-119218
	RTG	0	0	0	5186	20729	-35737

ZWW4HM400+5

Loadcases for tower strength (Special limit state)

		Ahead			Back		
Loadcase according to 50341-3-15	Att. Point	Vertical [N]	Transversal [N]	Longitudinal [N]	Vertical [N]	Transversal [N]	Longitudinal [N]
NL3/1a	GW / opgw	2552	11153	17805	0	0	0
Wind, 10°C	150C1F1	9419	39740	64571	0	0	0
Permanent loads yg= 1.2	150C1F2	9423	39476	64429	0	0	0
Wind angle: 0°	150C1F3	9429	39158	64272	0	0	0
	380C2F1	0	0	0	18838	79480	-129142
	380C2F2	0	0	0	18847	78952	-128857
	380C2F3	0	0	0	18857	78315	-128544
	RTG	0	0	0	5112	21390	-35017
NL3/1b	GW / opgw	2597	11647	19708	0	0	0
Wind, -20°C	150C1F1	9580	43143	73416	0	0	0
Permanent loads yg= 1.2	150C1F2	9581	43088	73417	0	0	0
Wind angle: 0°	150C1F3	9581	43020	73422	0	0	0
	380C2F1	0	0	0	19160	86286	-146831
	380C2F2	0	0	0	19162	86176	-146834
	380C2F3	0	0	0	19163	86041	-146843
	RTG	0	0	0	5183	22900	-39040
NL3/3	GW / opgw	4264	17601	28095	0	0	0
Wind, -5°C	150C1F1	10993	46508	76894	0	0	0
Permanent loads yg= 1.2	150C1F2	10996	46311	76822	0	0	0
Wind angle: 0°	150C1F3	10999	46071	76746	0	0	0
	380C2F1	0	0	0	21985	93017	-153789
	380C2F2	0	0	0	21991	92622	-153644
	380C2F3	0	0	0	21999	92141	-153491
	RTG	0	0	0	8550	33841	-55415
NL3/4	GW / opgw	3225	12601	21361	0	0	0
Construction/maintenance, +5°C	150C1F1	10777	42589	72456	0	0	0
Permanent loads yg= 1.2	150C1F2	10777	42537	72461	0	0	0
Wind angle: 0°	150C1F3	10777	42472	72471	0	0	0
	380C2F1	0	0	0	21553	85178	-144911
	380C2F2	0	0	0	21554	85073	-144923
	380C2F3	0	0	0	21555	84943	-144941
	RTG	0	0	0	6443	24997	-42671
NL3/1a	GW / opgw	2565	10276	17394	0	0	0
Wind, 10°C	150C1F1	9449	37542	63884	0	0	0
Permanent loads yg= 1.2	150C1F2	9450	37497	63889	0	0	0
Wind angle: 45°	150C1F3	9450	37440	63896	0	0	0
	380C2F1	0	0	0	18326	108679	-156431
	380C2F2	0	0	0	18380	105142	-152649
	380C2F3	0	0	0	18449	100820	-148114
	RTG	0	0	0	4994	28099	-41087
NL3/1b	GW / opgw	2598	11459	19723	0	0	0
Wind, -20°C	150C1F1	9584	42642	73508	0	0	0
Permanent loads yg= 1.2	150C1F2	9584	42630	73512	0	0	0
Wind angle: 45°	150C1F3	9584	42615	73519	0	0	0
	380C2F1	0	0	0	19065	91702	-149053
	380C2F2	0	0	0	19079	91042	-148632
	380C2F3	0	0	0	19095	90248	-148162
	RTG	0	0	0	5164	24142	-39484
NL3/3	GW / opgw	4284	16321	27629	0	0	0
Wind, -5°C	150C1F1	11014	44816	76643	0	0	0
Permanent loads yg= 1.2	150C1F2	11014	44779	76650	0	0	0
Wind angle: 45°	150C1F3	11014	44732	76661	0	0	0
	380C2F1	0	0	0	21558	114684	-171311
	380C2F2	0	0	0	21609	112005	-168685
	380C2F3	0	0	0	21673	108759	-165599
	RTG	0	0	0	8372	43299	-63052
NL3/4	GW / opgw	3226	12425	21395	0	0	0
Construction/maintenance, +5°C	150C1F1	10779	42104	72575	0	0	0
Permanent loads yg= 1.2	150C1F2	10779	42092	72580	0	0	0
Wind angle: 45°	150C1F3	10779	42077	72587	0	0	0
	380C2F1	0	0	0	21483	90180	-146412
	380C2F2	0	0	0	21493	89582	-146097
	380C2F3	0	0	0	21505	88858	-145750
	RTG	0	0	0	6430	26100	-42874
NL3/1a	GW / opgw	2484	15204	21794	0	0	0
Wind, 10°C	150C1F1	9236	49735	73361	0	0	0
Permanent loads yg= 1.2	150C1F2	9258	48417	72020	0	0	0
Wind angle: 90°	150C1F3	9287	46818	70436	0	0	0
	380C2F1	0	0	0	18471	99471	-146722
	380C2F2	0	0	0	18516	96834	-144041
	380C2F3	0	0	0	18573	93636	-140873
	RTG	0	0	0	5029	25959	-38867

NL3/1b	GW / opgw	2583	12391	20066	0	0	0
Wind, -20°C	150C1F1	9550	45001	74013	0	0	0
Permanent loads yg= 1.2	150C1F2	9555	44761	73888	0	0	0
Wind angle: 90°	150C1F3	9560	44472	73751	0	0	0
	380C2F1	0	0	0	19100	90001	-148026
	380C2F2	0	0	0	19109	89522	-147776
	380C2F3	0	0	0	19120	88943	-147502
	RTG	0	0	0	5171	23755	-39270
NL3/3	GW / opgw	4159	23320	33216	0	0	0
Wind, -5°C	150C1F1	10847	53876	82333	0	0	0
Permanent loads yg= 1.2	150C1F2	10866	52896	81446	0	0	0
Wind angle: 90°	150C1F3	10891	51714	80417	0	0	0
	380C2F1	0	0	0	21693	107752	-164666
	380C2F2	0	0	0	21733	105792	-162891
	380C2F3	0	0	0	21781	103428	-160834
	RTG	0	0	0	8426	40301	-60203
NL3/4	GW / opgw	3216	13252	21556	0	0	0
Construction/maintenance, +5°C	150C1F1	10754	44316	72826	0	0	0
Permanent loads yg= 1.2	150C1F2	10758	44097	72736	0	0	0
Wind angle: 90°	150C1F3	10762	43831	72640	0	0	0
	380C2F1	0	0	0	21509	88633	-145651
	380C2F2	0	0	0	21516	88194	-145472
	380C2F3	0	0	0	21524	87662	-145280
	RTG	0	0	0	6435	25765	-42750
NL3/1a	GW / opgw	2461	17001	23796	0	0	0
Wind, 10°C	150C1F1	9163	54340	78215	0	0	0
Permanent loads yg= 1.2	150C1F2	9190	52571	76325	0	0	0
Wind angle: -45°	150C1F3	9224	50410	74057	0	0	0
	380C2F1	0	0	0	18898	75085	-127768
	380C2F2	0	0	0	18899	74993	-127777
	380C2F3	0	0	0	18900	74880	-127792
	RTG	0	0	0	5124	20380	-34754
NL3/1b	GW / opgw	2576	12740	20330	0	0	0
Wind, -20°C	150C1F1	9532	45851	74527	0	0	0
Permanent loads yg= 1.2	150C1F2	9539	45521	74316	0	0	0
Wind angle: -45°	150C1F3	9548	45124	74081	0	0	0
	380C2F1	0	0	0	19168	85285	-147015
	380C2F2	0	0	0	19168	85260	-147025
	380C2F3	0	0	0	19168	85230	-147037
	RTG	0	0	0	5185	22666	-39091
NL3/3	GW / opgw	4124	25850	35846	0	0	0
Wind, -5°C	150C1F1	10779	57342	85655	0	0	0
Permanent loads yg= 1.2	150C1F2	10805	56002	84343	0	0	0
Wind angle: -45°	150C1F3	10836	54379	82799	0	0	0
	380C2F1	0	0	0	22027	89632	-153285
	380C2F2	0	0	0	22028	89557	-153301
	380C2F3	0	0	0	22028	89465	-153323
	RTG	0	0	0	8568	32350	-55175
NL3/4	GW / opgw	3211	13548	21728	0	0	0
Construction/maintenance, +5°C	150C1F1	10741	45090	73206	0	0	0
Permanent loads yg= 1.2	150C1F2	10746	44791	73048	0	0	0
Wind angle: -45°	150C1F3	10753	44429	72875	0	0	0
	380C2F1	0	0	0	21558	84208	-145150
	380C2F2	0	0	0	21558	84184	-145160
	380C2F3	0	0	0	21559	84154	-145174
	RTG	0	0	0	6444	24773	-42740
NL3/1a	GW / opgw	1915	9180	14387	0	0	0
Wind, 10°C	150C1F1	7081	32383	51830	0	0	0
Permanent loads yg= 0.9	150C1F2	7087	32068	51599	0	0	0
Wind angle: 0°	150C1F3	7094	31690	51338	0	0	0
	380C2F1	0	0	0	14162	64767	-103661
	380C2F2	0	0	0	14174	64137	-103198
	380C2F3	0	0	0	14187	63379	-102675
	RTG	0	0	0	3843	17260	-27865
NL3/1b	GW / opgw	1961	9402	15819	0	0	0
Wind, -20°C	150C1F1	7243	35045	59390	0	0	0
Permanent loads yg= 0.9	150C1F2	7244	34984	59381	0	0	0
Wind angle: 0°	150C1F3	7245	34910	59374	0	0	0
	380C2F1	0	0	0	14486	70090	-118780
	380C2F2	0	0	0	14487	69968	-118762
	380C2F3	0	0	0	14489	69819	-118747
	RTG	0	0	0	3914	18394	-31236

NL3/3	GW / opgw	3634	15856	25073	0	0	0
Wind, -5°C	150C1F1	8663	39148	64147	0	0	0
Permanent loads yg= 0.9	150C1F2	8667	38922	64025	0	0	0
Wind angle: 0°	150C1F3	8672	38649	63891	0	0	0
	380C2F1	0	0	0	17326	78296	-128293
	380C2F2	0	0	0	17334	77844	-128050
	380C2F3	0	0	0	17344	77298	-127782
	RTG	0	0	0	7295	30218	-49140
NL3/4	GW / opgw	2595	10591	17879	0	0	0
Construction/maintenance, +5°C	150C1F1	8455	35123	59524	0	0	0
Permanent loads yg= 0.9	150C1F2	8455	35066	59523	0	0	0
Wind angle: 0°	150C1F3	8456	34997	59524	0	0	0
	380C2F1	0	0	0	16909	70245	-119047
	380C2F2	0	0	0	16910	70133	-119045
	380C2F3	0	0	0	16912	69994	-119048
	RTG	0	0	0	5185	20962	-35683
NL3/1a	GW / opgw	1932	8144	13701	0	0	0
Wind, 10°C	150C1F1	7121	29832	50530	0	0	0
Permanent loads yg= 0.9	150C1F2	7122	29782	50528	0	0	0
Wind angle: 45°	150C1F3	7122	29721	50527	0	0	0
	380C2F1	0	0	0	13629	99184	-139988
	380C2F2	0	0	0	13675	95154	-135355
	380C2F3	0	0	0	13738	90178	-129687
	RTG	0	0	0	3716	25224	-36107
NL3/1b	GW / opgw	1963	9195	15802	0	0	0
Wind, -20°C	150C1F1	7248	34505	59414	0	0	0
Permanent loads yg= 0.9	150C1F2	7248	34493	59418	0	0	0
Wind angle: 45°	150C1F3	7248	34477	59424	0	0	0
	380C2F1	0	0	0	14356	76503	-122731
	380C2F2	0	0	0	14374	75701	-122063
	380C2F3	0	0	0	14396	74739	-121302
	RTG	0	0	0	3888	19852	-32053
NL3/3	GW / opgw	3657	14462	24409	0	0	0
Wind, -5°C	150C1F1	8691	37264	63563	0	0	0
Permanent loads yg= 0.9	150C1F2	8691	37225	63567	0	0	0
Wind angle: 45°	150C1F3	8691	37176	63573	0	0	0
	380C2F1	0	0	0	16843	103562	-152051
	380C2F2	0	0	0	16894	100477	-148723
	380C2F3	0	0	0	16961	96716	-144744
	RTG	0	0	0	7104	40646	-58458
NL3/4	GW / opgw	2596	10405	17897	0	0	0
Construction/maintenance, +5°C	150C1F1	8458	34612	59598	0	0	0
Permanent loads yg= 0.9	150C1F2	8458	34600	59603	0	0	0
Wind angle: 45°	150C1F3	8458	34584	59609	0	0	0
	380C2F1	0	0	0	16818	75923	-121720
	380C2F2	0	0	0	16831	75226	-121234
	380C2F3	0	0	0	16847	74387	-120688
	RTG	0	0	0	5168	22180	-36085
NL3/1a	GW / opgw	1846	13927	19581	0	0	0
Wind, 10°C	150C1F1	6880	44306	63960	0	0	0
Permanent loads yg= 0.9	150C1F2	6901	42767	62237	0	0	0
Wind angle: 90°	150C1F3	6930	40884	60161	0	0	0
	380C2F1	0	0	0	13759	88613	-127920
	380C2F2	0	0	0	13803	85535	-124474
	380C2F3	0	0	0	13859	81768	-120321
	RTG	0	0	0	3750	22733	-33281
NL3/1b	GW / opgw	1943	10289	16426	0	0	0
Wind, -20°C	150C1F1	7201	37221	60539	0	0	0
Permanent loads yg= 0.9	150C1F2	7208	36933	60329	0	0	0
Wind angle: 90°	150C1F3	7215	36586	60094	0	0	0
	380C2F1	0	0	0	14402	74442	-121078
	380C2F2	0	0	0	14415	73865	-120659
	380C2F3	0	0	0	14430	73172	-120187
	RTG	0	0	0	3897	19385	-31702
NL3/3	GW / opgw	3525	22131	31158	0	0	0
Wind, -5°C	150C1F1	8491	47772	71763	0	0	0
Permanent loads yg= 0.9	150C1F2	8513	46628	70591	0	0	0
Wind angle: 90°	150C1F3	8540	45243	69211	0	0	0
	380C2F1	0	0	0	16983	95544	-143525
	380C2F2	0	0	0	17026	93256	-141182
	380C2F3	0	0	0	17080	90486	-138422
	RTG	0	0	0	7158	37363	-55115

NL3/4	GW / opgw	2583	11319	18208	0	0	0
Construction/maintenance, +5°C	150C1F1	8426	37064	60264	0	0	0
Permanent loads yg= 0.9	150C1F2	8430	36811	60117	0	0	0
Wind angle: 90°	150C1F3	8435	36507	59954	0	0	0
	380C2F1	0	0	0	16851	74127	-120529
	380C2F2	0	0	0	16860	73623	-120235
	380C2F3	0	0	0	16871	73014	-119909
	RTG	0	0	0	5174	21802	-35887
NL3/1a	GW / opgw	1829	15923	21930	0	0	0
Wind, 10°C	150C1F1	6815	49592	69994	0	0	0
Permanent loads yg= 0.9	150C1F2	6838	47577	67677	0	0	0
Wind angle: -45°	150C1F3	6869	45089	64843	0	0	0
	380C2F1	0	0	0	14243	59665	-101060
	380C2F2	0	0	0	14244	59565	-101055
	380C2F3	0	0	0	14245	59442	-101054
	RTG	0	0	0	3860	16098	-27338
NL3/1b	GW / opgw	1934	10716	16824	0	0	0
Wind, -20°C	150C1F1	7178	38252	61365	0	0	0
Permanent loads yg= 0.9	150C1F2	7187	37851	61031	0	0	0
Wind angle: -45°	150C1F3	7198	37369	60651	0	0	0
	380C2F1	0	0	0	14496	69011	-118828
	380C2F2	0	0	0	14496	68985	-118836
	380C2F3	0	0	0	14496	68954	-118847
	RTG	0	0	0	3916	18143	-31257
NL3/3	GW / opgw	3493	24835	34090	0	0	0
Wind, -5°C	150C1F1	8421	51781	76025	0	0	0
Permanent loads yg= 0.9	150C1F2	8447	50238	74361	0	0	0
Wind angle: -45°	150C1F3	8481	48358	72372	0	0	0
	380C2F1	0	0	0	17381	74528	-127125
	380C2F2	0	0	0	17382	74449	-127133
	380C2F3	0	0	0	17382	74352	-127147
	RTG	0	0	0	7317	28620	-48714
NL3/4	GW / opgw	2577	11658	18456	0	0	0
Construction/maintenance, +5°C	150C1F1	8409	37961	60860	0	0	0
Permanent loads yg= 0.9	150C1F2	8416	37613	60617	0	0	0
Wind angle: -45°	150C1F3	8423	37193	60344	0	0	0
	380C2F1	0	0	0	16916	69224	-119196
	380C2F2	0	0	0	16916	69199	-119206
	380C2F3	0	0	0	16916	69168	-119218
	RTG	0	0	0	5186	20729	-35737

ZWW4HM400+5

Loadcases for tower strength (Special limit state)

		Ahead			Back		
Loadcase according to 50341-3-15	Att. Point	Vertical [N]	Transversal [N]	Longitudinal [N]	Vertical [N]	Transversal [N]	Longitudinal [N]
NL3/1a	GW / opgw	0	0	0	2552	11153	-17805
Wind, 10°C	150C1F1	0	0	0	9419	39740	-64571
Permanent loads yg= 1.2	150C1F2	0	0	0	9423	39476	-64429
Wind angle: 0°	150C1F3	0	0	0	9429	39158	-64272
	380C2F1	18838	79480	129142	18838	79480	-129142
	380C2F2	18847	78952	128857	18847	78952	-128857
	380C2F3	18857	78315	128544	18857	78315	-128544
	RTG	5112	21390	35017	5112	21390	-35017
NL3/1b	GW / opgw	0	0	0	2597	11647	-19708
Wind, -20°C	150C1F1	0	0	0	9580	43143	-73416
Permanent loads yg= 1.2	150C1F2	0	0	0	9581	43088	-73417
Wind angle: 0°	150C1F3	0	0	0	9581	43020	-73422
	380C2F1	19160	86286	146831	19160	86286	-146831
	380C2F2	19162	86176	146834	19162	86176	-146834
	380C2F3	19163	86041	146843	19163	86041	-146843
	RTG	5183	22900	39040	5183	22900	-39040
NL3/3	GW / opgw	0	0	0	4264	17601	-28095
Wind, -5°C	150C1F1	0	0	0	10993	46508	-76894
Permanent loads yg= 1.2	150C1F2	0	0	0	10996	46311	-76822
Wind angle: 0°	150C1F3	0	0	0	10999	46071	-76746
	380C2F1	21985	93017	153789	21985	93017	-153789
	380C2F2	21991	92622	153644	21991	92622	-153644
	380C2F3	21999	92141	153491	21999	92141	-153491
	RTG	8550	33841	55415	8550	33841	-55415
NL3/4	GW / opgw	0	0	0	3225	12601	-21361
Construction/maintenance, +5°C	150C1F1	0	0	0	10777	42589	-72456
Permanent loads yg= 1.2	150C1F2	0	0	0	10777	42537	-72461
Wind angle: 0°	150C1F3	0	0	0	10777	42472	-72471
	380C2F1	21553	85178	144911	21553	85178	-144911
	380C2F2	21554	85073	144923	21554	85073	-144923
	380C2F3	21555	84943	144941	21555	84943	-144941
	RTG	6443	24997	42671	6443	24997	-42671
NL3/1a	GW / opgw	0	0	0	2461	17001	-23796
Wind, 10°C	150C1F1	0	0	0	9163	54340	-78215
Permanent loads yg= 1.2	150C1F2	0	0	0	9190	52571	-76325
Wind angle: 45°	150C1F3	0	0	0	9224	50410	-74057
	380C2F1	18898	75085	127768	18326	108679	-156431
	380C2F2	18899	74993	127777	18380	105142	-152649
	380C2F3	18900	74880	127792	18449	100820	-148114
	RTG	5124	20380	34754	4994	28099	-41087
NL3/1b	GW / opgw	0	0	0	2576	12740	-20330
Wind, -20°C	150C1F1	0	0	0	9532	45851	-74527
Permanent loads yg= 1.2	150C1F2	0	0	0	9539	45521	-74316
Wind angle: 45°	150C1F3	0	0	0	9548	45124	-74081
	380C2F1	19168	85285	147015	19065	91702	-149053
	380C2F2	19168	85260	147025	19079	91042	-148632
	380C2F3	19168	85230	147037	19095	90248	-148162
	RTG	5185	22666	39091	5164	24142	-39484
NL3/3	GW / opgw	0	0	0	4124	25850	-35846
Wind, -5°C	150C1F1	0	0	0	10779	57342	-85655
Permanent loads yg= 1.2	150C1F2	0	0	0	10805	56002	-84343
Wind angle: 45°	150C1F3	0	0	0	10836	54379	-82799
	380C2F1	22027	89632	153285	21558	114684	-171311
	380C2F2	22028	89557	153301	21609	112005	-168685
	380C2F3	22028	89465	153323	21673	108759	-165599
	RTG	8568	32350	55175	8372	43299	-63052
NL3/4	GW / opgw	0	0	0	3211	13548	-21728
Construction/maintenance, +5°C	150C1F1	0	0	0	10741	45090	-73206
Permanent loads yg= 1.2	150C1F2	0	0	0	10746	44791	-73048
Wind angle: 45°	150C1F3	0	0	0	10753	44429	-72875
	380C2F1	21558	84208	145150	21483	90180	-146412
	380C2F2	21558	84184	145160	21493	89582	-146097
	380C2F3	21559	84154	145174	21505	88858	-145750
	RTG	6444	24773	42740	6430	26100	-42874
NL3/1a	GW / opgw	0	0	0	2484	15204	-21794
Wind, 10°C	150C1F1	0	0	0	9236	49735	-73361
Permanent loads yg= 1.2	150C1F2	0	0	0	9258	48417	-72020
Wind angle: 90°	150C1F3	0	0	0	9287	46818	-70436
	380C2F1	18471	99471	146722	18471	99471	-146722
	380C2F2	18516	96834	144041	18516	96834	-144041
	380C2F3	18573	93636	140873	18573	93636	-140873
	RTG	5029	25959	38867	5029	25959	-38867

NL3/1b	GW / opgw	0	0	0	2583	12391	-20066
Wind, -20°C	150C1F1	0	0	0	9550	45001	-74013
Permanent loads yg= 1.2	150C1F2	0	0	0	9555	44761	-73888
Wind angle: 90°	150C1F3	0	0	0	9560	44472	-73751
	380C2F1	19100	90001	148026	19100	90001	-148026
	380C2F2	19109	89522	147776	19109	89522	-147776
	380C2F3	19120	88943	147502	19120	88943	-147502
	RTG	5171	23755	39270	5171	23755	-39270
NL3/3	GW / opgw	0	0	0	4159	23320	-33216
Wind, -5°C	150C1F1	0	0	0	10847	53876	-82333
Permanent loads yg= 1.2	150C1F2	0	0	0	10866	52896	-81446
Wind angle: 90°	150C1F3	0	0	0	10891	51714	-80417
	380C2F1	21693	107752	164666	21693	107752	-164666
	380C2F2	21733	105792	162891	21733	105792	-162891
	380C2F3	21781	103428	160834	21781	103428	-160834
	RTG	8426	40301	60203	8426	40301	-60203
NL3/4	GW / opgw	0	0	0	3216	13252	-21556
Construction/maintenance, +5°C	150C1F1	0	0	0	10754	44316	-72826
Permanent loads yg= 1.2	150C1F2	0	0	0	10758	44097	-72736
Wind angle: 90°	150C1F3	0	0	0	10762	43831	-72640
	380C2F1	21509	88633	145651	21509	88633	-145651
	380C2F2	21516	88194	145472	21516	88194	-145472
	380C2F3	21524	87662	145280	21524	87662	-145280
	RTG	6435	25765	42750	6435	25765	-42750
NL3/1a	GW / opgw	0	0	0	2565	10276	-17394
Wind, 10°C	150C1F1	0	0	0	9449	37542	-63884
Permanent loads yg= 1.2	150C1F2	0	0	0	9450	37497	-63889
Wind angle: -45°	150C1F3	0	0	0	9450	37440	-63896
	380C2F1	18326	108679	156431	18898	75085	-127768
	380C2F2	18380	105142	152649	18899	74993	-127777
	380C2F3	18449	100820	148114	18900	74880	-127792
	RTG	4994	28099	41087	5124	20380	-34754
NL3/1b	GW / opgw	0	0	0	2598	11459	-19723
Wind, -20°C	150C1F1	0	0	0	9584	42642	-73508
Permanent loads yg= 1.2	150C1F2	0	0	0	9584	42630	-73512
Wind angle: -45°	150C1F3	0	0	0	9584	42615	-73519
	380C2F1	19065	91702	149053	19168	85285	-147015
	380C2F2	19079	91042	148632	19168	85260	-147025
	380C2F3	19095	90248	148162	19168	85230	-147037
	RTG	5164	24142	39484	5185	22666	-39091
NL3/3	GW / opgw	0	0	0	4284	16321	-27629
Wind, -5°C	150C1F1	0	0	0	11014	44816	-76643
Permanent loads yg= 1.2	150C1F2	0	0	0	11014	44779	-76650
Wind angle: -45°	150C1F3	0	0	0	11014	44732	-76661
	380C2F1	21558	114684	171311	22027	89632	-153285
	380C2F2	21609	112005	168685	22028	89557	-153301
	380C2F3	21673	108759	165599	22028	89465	-153323
	RTG	8372	43299	63052	8568	32350	-55175
NL3/4	GW / opgw	0	0	0	3226	12425	-21395
Construction/maintenance, +5°C	150C1F1	0	0	0	10779	42104	-72575
Permanent loads yg= 1.2	150C1F2	0	0	0	10779	42092	-72580
Wind angle: -45°	150C1F3	0	0	0	10779	42077	-72587
	380C2F1	21483	90180	146412	21558	84208	-145150
	380C2F2	21493	89582	146097	21558	84184	-145160
	380C2F3	21505	88858	145750	21559	84154	-145174
	RTG	6430	26100	42874	6444	24773	-42740
NL3/1a	GW / opgw	0	0	0	1915	9180	-14387
Wind, 10°C	150C1F1	0	0	0	7081	32383	-51830
Permanent loads yg= 0.9	150C1F2	0	0	0	7087	32068	-51599
Wind angle: 0°	150C1F3	0	0	0	7094	31690	-51338
	380C2F1	14162	64767	103661	14162	64767	-103661
	380C2F2	14174	64137	103198	14174	64137	-103198
	380C2F3	14187	63379	102675	14187	63379	-102675
	RTG	3843	17260	27865	3843	17260	-27865
NL3/1b	GW / opgw	0	0	0	1961	9402	-15819
Wind, -20°C	150C1F1	0	0	0	7243	35045	-59390
Permanent loads yg= 0.9	150C1F2	0	0	0	7244	34984	-59381
Wind angle: 0°	150C1F3	0	0	0	7245	34910	-59374
	380C2F1	14486	70090	118780	14486	70090	-118780
	380C2F2	14487	69968	118762	14487	69968	-118762
	380C2F3	14489	69819	118747	14489	69819	-118747
	RTG	3914	18394	31236	3914	18394	-31236

NL3/3	GW / opgw	0	0	0	3634	15856	-25073
Wind, -5°C	150C1F1	0	0	0	8663	39148	-64147
Permanent loads yg= 0.9	150C1F2	0	0	0	8667	38922	-64025
Wind angle: 0°	150C1F3	0	0	0	8672	38649	-63891
	380C2F1	17326	78296	128293	17326	78296	-128293
	380C2F2	17334	77844	128050	17334	77844	-128050
	380C2F3	17344	77298	127782	17344	77298	-127782
	RTG	7295	30218	49140	7295	30218	-49140
NL3/4	GW / opgw	0	0	0	2595	10591	-17879
Construction/maintenance, +5°C	150C1F1	0	0	0	8455	35123	-59524
Permanent loads yg= 0.9	150C1F2	0	0	0	8455	35066	-59523
Wind angle: 0°	150C1F3	0	0	0	8456	34997	-59524
	380C2F1	16909	70245	119047	16909	70245	-119047
	380C2F2	16910	70133	119045	16910	70133	-119045
	380C2F3	16912	69994	119048	16912	69994	-119048
	RTG	5185	20962	35683	5185	20962	-35683
NL3/1a	GW / opgw	0	0	0	1829	15923	-21930
Wind, 10°C	150C1F1	0	0	0	6815	49592	-69994
Permanent loads yg= 0.9	150C1F2	0	0	0	6838	47577	-67677
Wind angle: 45°	150C1F3	0	0	0	6869	45089	-64843
	380C2F1	14243	59665	101060	13629	99184	-139988
	380C2F2	14244	59565	101055	13675	95154	-135355
	380C2F3	14245	59442	101054	13738	90178	-129687
	RTG	3860	16098	27338	3716	25224	-36107
NL3/1b	GW / opgw	0	0	0	1934	10716	-16824
Wind, -20°C	150C1F1	0	0	0	7178	38252	-61365
Permanent loads yg= 0.9	150C1F2	0	0	0	7187	37851	-61031
Wind angle: 45°	150C1F3	0	0	0	7198	37369	-60651
	380C2F1	14496	69011	118828	14356	76503	-122731
	380C2F2	14496	68985	118836	14374	75701	-122063
	380C2F3	14496	68954	118847	14396	74739	-121302
	RTG	3916	18143	31257	3888	19852	-32053
NL3/3	GW / opgw	0	0	0	3493	24835	-34090
Wind, -5°C	150C1F1	0	0	0	8421	51781	-76025
Permanent loads yg= 0.9	150C1F2	0	0	0	8447	50238	-74361
Wind angle: 45°	150C1F3	0	0	0	8481	48358	-72372
	380C2F1	17381	74528	127125	16843	103562	-152051
	380C2F2	17382	74449	127133	16894	100477	-148723
	380C2F3	17382	74352	127147	16961	96716	-144744
	RTG	7317	28620	48714	7104	40646	-58458
NL3/4	GW / opgw	0	0	0	2577	11658	-18456
Construction/maintenance, +5°C	150C1F1	0	0	0	8409	37961	-60860
Permanent loads yg= 0.9	150C1F2	0	0	0	8416	37613	-60617
Wind angle: 45°	150C1F3	0	0	0	8423	37193	-60344
	380C2F1	16916	69224	119196	16818	75923	-121720
	380C2F2	16916	69199	119206	16831	75226	-121234
	380C2F3	16916	69168	119218	16847	74387	-120688
	RTG	5186	20729	35737	5168	22180	-36085
NL3/1a	GW / opgw	0	0	0	1846	13927	-19581
Wind, 10°C	150C1F1	0	0	0	6880	44306	-63960
Permanent loads yg= 0.9	150C1F2	0	0	0	6901	42767	-62237
Wind angle: 90°	150C1F3	0	0	0	6930	40884	-60161
	380C2F1	13759	88613	127920	13759	88613	-127920
	380C2F2	13803	85535	124474	13803	85535	-124474
	380C2F3	13859	81768	120321	13859	81768	-120321
	RTG	3750	22733	33281	3750	22733	-33281
NL3/1b	GW / opgw	0	0	0	1943	10289	-16426
Wind, -20°C	150C1F1	0	0	0	7201	37221	-60539
Permanent loads yg= 0.9	150C1F2	0	0	0	7208	36933	-60329
Wind angle: 90°	150C1F3	0	0	0	7215	36586	-60094
	380C2F1	14402	74442	121078	14402	74442	-121078
	380C2F2	14415	73865	120659	14415	73865	-120659
	380C2F3	14430	73172	120187	14430	73172	-120187
	RTG	3897	19385	31702	3897	19385	-31702
NL3/3	GW / opgw	0	0	0	3525	22131	-31158
Wind, -5°C	150C1F1	0	0	0	8491	47772	-71763
Permanent loads yg= 0.9	150C1F2	0	0	0	8513	46628	-70591
Wind angle: 90°	150C1F3	0	0	0	8540	45243	-69211
	380C2F1	16983	95544	143525	16983	95544	-143525
	380C2F2	17026	93256	141182	17026	93256	-141182
	380C2F3	17080	90486	138422	17080	90486	-138422
	RTG	7158	37363	55115	7158	37363	-55115

NL3/4	GW / opgw	0	0	0	2583	11319	-18208
Construction/maintenance, +5°C	150C1F1	0	0	0	8426	37064	-60264
Permanent loads yg= 0.9	150C1F2	0	0	0	8430	36811	-60117
Wind angle: 90°	150C1F3	0	0	0	8435	36507	-59954
	380C2F1	16851	74127	120529	16851	74127	-120529
	380C2F2	16860	73623	120235	16860	73623	-120235
	380C2F3	16871	73014	119909	16871	73014	-119909
	RTG	5174	21802	35887	5174	21802	-35887
NL3/1a	GW / opgw	0	0	0	1932	8144	-13701
Wind, 10°C	150C1F1	0	0	0	7121	29832	-50530
Permanent loads yg= 0.9	150C1F2	0	0	0	7122	29782	-50528
Wind angle: -45°	150C1F3	0	0	0	7122	29721	-50527
	380C2F1	13629	99184	139988	14243	59665	-101060
	380C2F2	13675	95154	135355	14244	59565	-101055
	380C2F3	13738	90178	129687	14245	59442	-101054
	RTG	3716	25224	36107	3860	16098	-27338
NL3/1b	GW / opgw	0	0	0	1963	9195	-15802
Wind, -20°C	150C1F1	0	0	0	7248	34505	-59414
Permanent loads yg= 0.9	150C1F2	0	0	0	7248	34493	-59418
Wind angle: -45°	150C1F3	0	0	0	7248	34477	-59424
	380C2F1	14356	76503	122731	14496	69011	-118828
	380C2F2	14374	75701	122063	14496	68985	-118836
	380C2F3	14396	74739	121302	14496	68954	-118847
	RTG	3888	19852	32053	3916	18143	-31257
NL3/3	GW / opgw	0	0	0	3657	14462	-24409
Wind, -5°C	150C1F1	0	0	0	8691	37264	-63563
Permanent loads yg= 0.9	150C1F2	0	0	0	8691	37225	-63567
Wind angle: -45°	150C1F3	0	0	0	8691	37176	-63573
	380C2F1	16843	103562	152051	17381	74528	-127125
	380C2F2	16894	100477	148723	17382	74449	-127133
	380C2F3	16961	96716	144744	17382	74352	-127147
	RTG	7104	40646	58458	7317	28620	-48714
NL3/4	GW / opgw	0	0	0	2596	10405	-17897
Construction/maintenance, +5°C	150C1F1	0	0	0	8458	34612	-59598
Permanent loads yg= 0.9	150C1F2	0	0	0	8458	34600	-59603
Wind angle: -45°	150C1F3	0	0	0	8458	34584	-59609
	380C2F1	16818	75923	121720	16916	69224	-119196
	380C2F2	16831	75226	121234	16916	69199	-119206
	380C2F3	16847	74387	120688	16916	69168	-119218
	RTG	5168	22180	36085	5186	20729	-35737

ZWW4HM400+5

Loadcases for tower strength (Special limit state)

		Ahead			Back		
Loadcase according to 50341-3-15	Att. Point	Vertical [N]	Transversal [N]	Longitudinal [N]	Vertical [N]	Transversal [N]	Longitudinal [N]
NL3/1a	GW / opgw	2552	11153	17805	2552	11153	-17805
Wind, 10°C	150C1F1	9419	39740	64571	9419	39740	-64571
Permanent loads yg= 1.2	150C1F2	9423	39476	64429	9423	39476	-64429
Wind angle: 0°	150C1F3	9429	39158	64272	9429	39158	-64272
	380C2F1	0	0	0	18838	79480	-129142
	380C2F2	0	0	0	18847	78952	-128857
	380C2F3	0	0	0	18857	78315	-128544
	RTG	0	0	0	5112	21390	-35017
NL3/1b	GW / opgw	2597	11647	19708	2597	11647	-19708
Wind, -20°C	150C1F1	9580	43143	73416	9580	43143	-73416
Permanent loads yg= 1.2	150C1F2	9581	43088	73417	9581	43088	-73417
Wind angle: 0°	150C1F3	9581	43020	73422	9581	43020	-73422
	380C2F1	0	0	0	19160	86286	-146831
	380C2F2	0	0	0	19162	86176	-146834
	380C2F3	0	0	0	19163	86041	-146843
	RTG	0	0	0	5183	22900	-39040
NL3/3	GW / opgw	4264	17601	28095	4264	17601	-28095
Wind, -5°C	150C1F1	10993	46508	76894	10993	46508	-76894
Permanent loads yg= 1.2	150C1F2	10996	46311	76822	10996	46311	-76822
Wind angle: 0°	150C1F3	10999	46071	76746	10999	46071	-76746
	380C2F1	0	0	0	21985	93017	-153789
	380C2F2	0	0	0	21991	92622	-153644
	380C2F3	0	0	0	21999	92141	-153491
	RTG	0	0	0	8550	33841	-55415
NL3/4	GW / opgw	3225	12601	21361	3225	12601	-21361
Construction/maintenance, +5°C	150C1F1	10777	42589	72456	10777	42589	-72456
Permanent loads yg= 1.2	150C1F2	10777	42537	72461	10777	42537	-72461
Wind angle: 0°	150C1F3	10777	42472	72471	10777	42472	-72471
	380C2F1	0	0	0	21553	85178	-144911
	380C2F2	0	0	0	21554	85073	-144923
	380C2F3	0	0	0	21555	84943	-144941
	RTG	0	0	0	6443	24997	-42671
NL3/1a	GW / opgw	2565	10276	17394	2461	17001	-23796
Wind, 10°C	150C1F1	9449	37542	63884	9163	54340	-78215
Permanent loads yg= 1.2	150C1F2	9450	37497	63889	9190	52571	-76325
Wind angle: 45°	150C1F3	9450	37440	63896	9224	50410	-74057
	380C2F1	0	0	0	18326	108679	-156431
	380C2F2	0	0	0	18380	105142	-152649
	380C2F3	0	0	0	18449	100820	-148114
	RTG	0	0	0	4994	28099	-41087
NL3/1b	GW / opgw	2598	11459	19723	2576	12740	-20330
Wind, -20°C	150C1F1	9584	42642	73508	9532	45851	-74527
Permanent loads yg= 1.2	150C1F2	9584	42630	73512	9539	45521	-74316
Wind angle: 45°	150C1F3	9584	42615	73519	9548	45124	-74081
	380C2F1	0	0	0	19065	91702	-149053
	380C2F2	0	0	0	19079	91042	-148632
	380C2F3	0	0	0	19095	90248	-148162
	RTG	0	0	0	5164	24142	-39484
NL3/3	GW / opgw	4284	16321	27629	4124	25850	-35846
Wind, -5°C	150C1F1	11014	44816	76643	10779	57342	-85655
Permanent loads yg= 1.2	150C1F2	11014	44779	76650	10805	56002	-84343
Wind angle: 45°	150C1F3	11014	44732	76661	10836	54379	-82799
	380C2F1	0	0	0	21558	114684	-171311
	380C2F2	0	0	0	21609	112005	-168685
	380C2F3	0	0	0	21673	108759	-165599
	RTG	0	0	0	8372	43299	-63052
NL3/4	GW / opgw	3226	12425	21395	3211	13548	-21728
Construction/maintenance, +5°C	150C1F1	10779	42104	72575	10741	45090	-73206
Permanent loads yg= 1.2	150C1F2	10779	42092	72580	10746	44791	-73048
Wind angle: 45°	150C1F3	10779	42077	72587	10753	44429	-72875
	380C2F1	0	0	0	21483	90180	-146412
	380C2F2	0	0	0	21493	89582	-146097
	380C2F3	0	0	0	21505	88858	-145750
	RTG	0	0	0	6430	26100	-42874
NL3/1a	GW / opgw	2484	15204	21794	2484	15204	-21794
Wind, 10°C	150C1F1	9236	49735	73361	9236	49735	-73361
Permanent loads yg= 1.2	150C1F2	9258	48417	72020	9258	48417	-72020
Wind angle: 90°	150C1F3	9287	46818	70436	9287	46818	-70436
	380C2F1	0	0	0	18471	99471	-146722
	380C2F2	0	0	0	18516	96834	-144041
	380C2F3	0	0	0	18573	93636	-140873
	RTG	0	0	0	5029	25959	-38867

NL3/1b	GW / opgw	2583	12391	20066	2583	12391	-20066
Wind, -20°C	150C1F1	9550	45001	74013	9550	45001	-74013
Permanent loads yg= 1.2	150C1F2	9555	44761	73888	9555	44761	-73888
Wind angle: 90°	150C1F3	9560	44472	73751	9560	44472	-73751
	380C2F1	0	0	0	19100	90001	-148026
	380C2F2	0	0	0	19109	89522	-147776
	380C2F3	0	0	0	19120	88943	-147502
	RTG	0	0	0	5171	23755	-39270
NL3/3	GW / opgw	4159	23320	33216	4159	23320	-33216
Wind, -5°C	150C1F1	10847	53876	82333	10847	53876	-82333
Permanent loads yg= 1.2	150C1F2	10866	52896	81446	10866	52896	-81446
Wind angle: 90°	150C1F3	10891	51714	80417	10891	51714	-80417
	380C2F1	0	0	0	21693	107752	-164666
	380C2F2	0	0	0	21733	105792	-162891
	380C2F3	0	0	0	21781	103428	-160834
	RTG	0	0	0	8426	40301	-60203
NL3/4	GW / opgw	3216	13252	21556	3216	13252	-21556
Construction/maintenance, +5°C	150C1F1	10754	44316	72826	10754	44316	-72826
Permanent loads yg= 1.2	150C1F2	10758	44097	72736	10758	44097	-72736
Wind angle: 90°	150C1F3	10762	43831	72640	10762	43831	-72640
	380C2F1	0	0	0	21509	88633	-145651
	380C2F2	0	0	0	21516	88194	-145472
	380C2F3	0	0	0	21524	87662	-145280
	RTG	0	0	0	6435	25765	-42750
NL3/1a	GW / opgw	2461	17001	23796	2565	10276	-17394
Wind, 10°C	150C1F1	9163	54340	78215	9449	37542	-63884
Permanent loads yg= 1.2	150C1F2	9190	52571	76325	9450	37497	-63889
Wind angle: -45°	150C1F3	9224	50410	74057	9450	37440	-63896
	380C2F1	0	0	0	18898	75085	-127768
	380C2F2	0	0	0	18899	74993	-127777
	380C2F3	0	0	0	18900	74880	-127792
	RTG	0	0	0	5124	20380	-34754
NL3/1b	GW / opgw	2576	12740	20330	2598	11459	-19723
Wind, -20°C	150C1F1	9532	45851	74527	9584	42642	-73508
Permanent loads yg= 1.2	150C1F2	9539	45521	74316	9584	42630	-73512
Wind angle: -45°	150C1F3	9548	45124	74081	9584	42615	-73519
	380C2F1	0	0	0	19168	85285	-147015
	380C2F2	0	0	0	19168	85260	-147025
	380C2F3	0	0	0	19168	85230	-147037
	RTG	0	0	0	5185	22666	-39091
NL3/3	GW / opgw	4124	25850	35846	4284	16321	-27629
Wind, -5°C	150C1F1	10779	57342	85655	11014	44816	-76643
Permanent loads yg= 1.2	150C1F2	10805	56002	84343	11014	44779	-76650
Wind angle: -45°	150C1F3	10836	54379	82799	11014	44732	-76661
	380C2F1	0	0	0	22027	89632	-153285
	380C2F2	0	0	0	22028	89557	-153301
	380C2F3	0	0	0	22028	89465	-153323
	RTG	0	0	0	8568	32350	-55175
NL3/4	GW / opgw	3211	13548	21728	3226	12425	-21395
Construction/maintenance, +5°C	150C1F1	10741	45090	73206	10779	42104	-72575
Permanent loads yg= 1.2	150C1F2	10746	44791	73048	10779	42092	-72580
Wind angle: -45°	150C1F3	10753	44429	72875	10779	42077	-72587
	380C2F1	0	0	0	21558	84208	-145150
	380C2F2	0	0	0	21558	84184	-145160
	380C2F3	0	0	0	21559	84154	-145174
	RTG	0	0	0	6444	24773	-42740
NL3/1a	GW / opgw	1915	9180	14387	1915	9180	-14387
Wind, 10°C	150C1F1	7081	32383	51830	7081	32383	-51830
Permanent loads yg= 0.9	150C1F2	7087	32068	51599	7087	32068	-51599
Wind angle: 0°	150C1F3	7094	31690	51338	7094	31690	-51338
	380C2F1	0	0	0	14162	64767	-103661
	380C2F2	0	0	0	14174	64137	-103198
	380C2F3	0	0	0	14187	63379	-102675
	RTG	0	0	0	3843	17260	-27865
NL3/1b	GW / opgw	1961	9402	15819	1961	9402	-15819
Wind, -20°C	150C1F1	7243	35045	59390	7243	35045	-59390
Permanent loads yg= 0.9	150C1F2	7244	34984	59381	7244	34984	-59381
Wind angle: 0°	150C1F3	7245	34910	59374	7245	34910	-59374
	380C2F1	0	0	0	14486	70090	-118780
	380C2F2	0	0	0	14487	69968	-118762
	380C2F3	0	0	0	14489	69819	-118747
	RTG	0	0	0	3914	18394	-31236

NL3/3	GW / opgw	3634	15856	25073	3634	15856	-25073
Wind, -5°C	150C1F1	8663	39148	64147	8663	39148	-64147
Permanent loads yg= 0.9	150C1F2	8667	38922	64025	8667	38922	-64025
Wind angle: 0°	150C1F3	8672	38649	63891	8672	38649	-63891
	380C2F1	0	0	0	17326	78296	-128293
	380C2F2	0	0	0	17334	77844	-128050
	380C2F3	0	0	0	17344	77298	-127782
	RTG	0	0	0	7295	30218	-49140
NL3/4	GW / opgw	2595	10591	17879	2595	10591	-17879
Construction/maintenance, +5°C	150C1F1	8455	35123	59524	8455	35123	-59524
Permanent loads yg= 0.9	150C1F2	8455	35066	59523	8455	35066	-59523
Wind angle: 0°	150C1F3	8456	34997	59524	8456	34997	-59524
	380C2F1	0	0	0	16909	70245	-119047
	380C2F2	0	0	0	16910	70133	-119045
	380C2F3	0	0	0	16912	69994	-119048
	RTG	0	0	0	5185	20962	-35683
NL3/1a	GW / opgw	1932	8144	13701	1829	15923	-21930
Wind, 10°C	150C1F1	7121	29832	50530	6815	49592	-69994
Permanent loads yg= 0.9	150C1F2	7122	29782	50528	6838	47577	-67677
Wind angle: 45°	150C1F3	7122	29721	50527	6869	45089	-64843
	380C2F1	0	0	0	13629	99184	-139988
	380C2F2	0	0	0	13675	95154	-135355
	380C2F3	0	0	0	13738	90178	-129687
	RTG	0	0	0	3716	25224	-36107
NL3/1b	GW / opgw	1963	9195	15802	1934	10716	-16824
Wind, -20°C	150C1F1	7248	34505	59414	7178	38252	-61365
Permanent loads yg= 0.9	150C1F2	7248	34493	59418	7187	37851	-61031
Wind angle: 45°	150C1F3	7248	34477	59424	7198	37369	-60651
	380C2F1	0	0	0	14356	76503	-122731
	380C2F2	0	0	0	14374	75701	-122063
	380C2F3	0	0	0	14396	74739	-121302
	RTG	0	0	0	3888	19852	-32053
NL3/3	GW / opgw	3657	14462	24409	3493	24835	-34090
Wind, -5°C	150C1F1	8691	37264	63563	8421	51781	-76025
Permanent loads yg= 0.9	150C1F2	8691	37225	63567	8447	50238	-74361
Wind angle: 45°	150C1F3	8691	37176	63573	8481	48358	-72372
	380C2F1	0	0	0	16843	103562	-152051
	380C2F2	0	0	0	16894	100477	-148723
	380C2F3	0	0	0	16961	96716	-144744
	RTG	0	0	0	7104	40646	-58458
NL3/4	GW / opgw	2596	10405	17897	2577	11658	-18456
Construction/maintenance, +5°C	150C1F1	8458	34612	59598	8409	37961	-60860
Permanent loads yg= 0.9	150C1F2	8458	34600	59603	8416	37613	-60617
Wind angle: 45°	150C1F3	8458	34584	59609	8423	37193	-60344
	380C2F1	0	0	0	16818	75923	-121720
	380C2F2	0	0	0	16831	75226	-121234
	380C2F3	0	0	0	16847	74387	-120688
	RTG	0	0	0	5168	22180	-36085
NL3/1a	GW / opgw	1846	13927	19581	1846	13927	-19581
Wind, 10°C	150C1F1	6880	44306	63960	6880	44306	-63960
Permanent loads yg= 0.9	150C1F2	6901	42767	62237	6901	42767	-62237
Wind angle: 90°	150C1F3	6930	40884	60161	6930	40884	-60161
	380C2F1	0	0	0	13759	88613	-127920
	380C2F2	0	0	0	13803	85535	-124474
	380C2F3	0	0	0	13859	81768	-120321
	RTG	0	0	0	3750	22733	-33281
NL3/1b	GW / opgw	1943	10289	16426	1943	10289	-16426
Wind, -20°C	150C1F1	7201	37221	60539	7201	37221	-60539
Permanent loads yg= 0.9	150C1F2	7208	36933	60329	7208	36933	-60329
Wind angle: 90°	150C1F3	7215	36586	60094	7215	36586	-60094
	380C2F1	0	0	0	14402	74442	-121078
	380C2F2	0	0	0	14415	73865	-120659
	380C2F3	0	0	0	14430	73172	-120187
	RTG	0	0	0	3897	19385	-31702
NL3/3	GW / opgw	3525	22131	31158	3525	22131	-31158
Wind, -5°C	150C1F1	8491	47772	71763	8491	47772	-71763
Permanent loads yg= 0.9	150C1F2	8513	46628	70591	8513	46628	-70591
Wind angle: 90°	150C1F3	8540	45243	69211	8540	45243	-69211
	380C2F1	0	0	0	16983	95544	-143525
	380C2F2	0	0	0	17026	93256	-141182
	380C2F3	0	0	0	17080	90486	-138422
	RTG	0	0	0	7158	37363	-55115

NL3/4	GW / opgw	2583	11319	18208	2583	11319	-18208
Construction/maintenance, +5°C	150C1F1	8426	37064	60264	8426	37064	-60264
Permanent loads yg= 0.9	150C1F2	8430	36811	60117	8430	36811	-60117
Wind angle: 90°	150C1F3	8435	36507	59954	8435	36507	-59954
	380C2F1	0	0	0	16851	74127	-120529
	380C2F2	0	0	0	16860	73623	-120235
	380C2F3	0	0	0	16871	73014	-119909
	RTG	0	0	0	5174	21802	-35887
NL3/1a	GW / opgw	1829	15923	21930	1932	8144	-13701
Wind, 10°C	150C1F1	6815	49592	69994	7121	29832	-50530
Permanent loads yg= 0.9	150C1F2	6838	47577	67677	7122	29782	-50528
Wind angle: -45°	150C1F3	6869	45089	64843	7122	29721	-50527
	380C2F1	0	0	0	14243	59665	-101060
	380C2F2	0	0	0	14244	59565	-101055
	380C2F3	0	0	0	14245	59442	-101054
	RTG	0	0	0	3860	16098	-27338
NL3/1b	GW / opgw	1934	10716	16824	1963	9195	-15802
Wind, -20°C	150C1F1	7178	38252	61365	7248	34505	-59414
Permanent loads yg= 0.9	150C1F2	7187	37851	61031	7248	34493	-59418
Wind angle: -45°	150C1F3	7198	37369	60651	7248	34477	-59424
	380C2F1	0	0	0	14496	69011	-118828
	380C2F2	0	0	0	14496	68985	-118836
	380C2F3	0	0	0	14496	68954	-118847
	RTG	0	0	0	3916	18143	-31257
NL3/3	GW / opgw	3493	24835	34090	3657	14462	-24409
Wind, -5°C	150C1F1	8421	51781	76025	8691	37264	-63563
Permanent loads yg= 0.9	150C1F2	8447	50238	74361	8691	37225	-63567
Wind angle: -45°	150C1F3	8481	48358	72372	8691	37176	-63573
	380C2F1	0	0	0	17381	74528	-127125
	380C2F2	0	0	0	17382	74449	-127133
	380C2F3	0	0	0	17382	74352	-127147
	RTG	0	0	0	7317	28620	-48714
NL3/4	GW / opgw	2577	11658	18456	2596	10405	-17897
Construction/maintenance, +5°C	150C1F1	8409	37961	60860	8458	34612	-59598
Permanent loads yg= 0.9	150C1F2	8416	37613	60617	8458	34600	-59603
Wind angle: -45°	150C1F3	8423	37193	60344	8458	34584	-59609
	380C2F1	0	0	0	16916	69224	-119196
	380C2F2	0	0	0	16916	69199	-119206
	380C2F3	0	0	0	16916	69168	-119218
	RTG	0	0	0	5186	20729	-35737

ZWW4HM400+5

Loadcases for tower strength (Special limit state)

		Ahead			Back		
Loadcase according to 50341-3-15	Att. Point	Vertical [N]	Transversal [N]	Longitudinal [N]	Vertical [N]	Transversal [N]	Longitudinal [N]
NL3/1a	GW / opgw	2552	11153	17805	0	0	0
Wind, 10°C	150C1F1	9419	39740	64571	0	0	0
Permanent loads yg= 1.2	150C1F2	9423	39476	64429	0	0	0
Wind angle: 0°	150C1F3	9429	39158	64272	0	0	0
	380C2F1	18838	79480	129142	18838	79480	-129142
	380C2F2	18847	78952	128857	18847	78952	-128857
	380C2F3	18857	78315	128544	18857	78315	-128544
	RTG	0	0	0	5112	21390	-35017
NL3/1b	GW / opgw	2597	11647	19708	0	0	0
Wind, -20°C	150C1F1	9580	43143	73416	0	0	0
Permanent loads yg= 1.2	150C1F2	9581	43088	73417	0	0	0
Wind angle: 0°	150C1F3	9581	43020	73422	0	0	0
	380C2F1	19160	86286	146831	19160	86286	-146831
	380C2F2	19162	86176	146834	19162	86176	-146834
	380C2F3	19163	86041	146843	19163	86041	-146843
	RTG	0	0	0	5183	22900	-39040
NL3/3	GW / opgw	4264	17601	28095	0	0	0
Wind, -5°C	150C1F1	10993	46508	76894	0	0	0
Permanent loads yg= 1.2	150C1F2	10996	46311	76822	0	0	0
Wind angle: 0°	150C1F3	10999	46071	76746	0	0	0
	380C2F1	21985	93017	153789	21985	93017	-153789
	380C2F2	21991	92622	153644	21991	92622	-153644
	380C2F3	21999	92141	153491	21999	92141	-153491
	RTG	0	0	0	8550	33841	-55415
NL3/4	GW / opgw	3225	12601	21361	0	0	0
Construction/maintenance, +5°C	150C1F1	10777	42589	72456	0	0	0
Permanent loads yg= 1.2	150C1F2	10777	42537	72461	0	0	0
Wind angle: 0°	150C1F3	10777	42472	72471	0	0	0
	380C2F1	21553	85178	144911	21553	85178	-144911
	380C2F2	21554	85073	144923	21554	85073	-144923
	380C2F3	21555	84943	144941	21555	84943	-144941
	RTG	0	0	0	6443	24997	-42671
NL3/1a	GW / opgw	2565	10276	17394	0	0	0
Wind, 10°C	150C1F1	9449	37542	63884	0	0	0
Permanent loads yg= 1.2	150C1F2	9450	37497	63889	0	0	0
Wind angle: 45°	150C1F3	9450	37440	63896	0	0	0
	380C2F1	18898	75085	127768	18326	108679	-156431
	380C2F2	18899	74993	127777	18380	105142	-152649
	380C2F3	18900	74880	127792	18449	100820	-148114
	RTG	0	0	0	4994	28099	-41087
NL3/1b	GW / opgw	2598	11459	19723	0	0	0
Wind, -20°C	150C1F1	9584	42642	73508	0	0	0
Permanent loads yg= 1.2	150C1F2	9584	42630	73512	0	0	0
Wind angle: 45°	150C1F3	9584	42615	73519	0	0	0
	380C2F1	19168	85285	147015	19065	91702	-149053
	380C2F2	19168	85260	147025	19079	91042	-148632
	380C2F3	19168	85230	147037	19095	90248	-148162
	RTG	0	0	0	5164	24142	-39484
NL3/3	GW / opgw	4284	16321	27629	0	0	0
Wind, -5°C	150C1F1	11014	44816	76643	0	0	0
Permanent loads yg= 1.2	150C1F2	11014	44779	76650	0	0	0
Wind angle: 45°	150C1F3	11014	44732	76661	0	0	0
	380C2F1	22027	89632	153285	21558	114684	-171311
	380C2F2	22028	89557	153301	21609	112005	-168685
	380C2F3	22028	89465	153323	21673	108759	-165599
	RTG	0	0	0	8372	43299	-63052
NL3/4	GW / opgw	3226	12425	21395	0	0	0
Construction/maintenance, +5°C	150C1F1	10779	42104	72575	0	0	0
Permanent loads yg= 1.2	150C1F2	10779	42092	72580	0	0	0
Wind angle: 45°	150C1F3	10779	42077	72587	0	0	0
	380C2F1	21558	84208	145150	21483	90180	-146412
	380C2F2	21558	84184	145160	21493	89582	-146097
	380C2F3	21559	84154	145174	21505	88858	-145750
	RTG	0	0	0	6430	26100	-42874
NL3/1a	GW / opgw	2484	15204	21794	0	0	0
Wind, 10°C	150C1F1	9236	49735	73361	0	0	0
Permanent loads yg= 1.2	150C1F2	9258	48417	72020	0	0	0
Wind angle: 90°	150C1F3	9287	46818	70436	0	0	0
	380C2F1	18471	99471	146722	18471	99471	-146722
	380C2F2	18516	96834	144041	18516	96834	-144041
	380C2F3	18573	93636	140873	18573	93636	-140873
	RTG	0	0	0	5029	25959	-38867

NL3/1b	GW / opgw	2583	12391	20066	0	0	0
Wind, -20°C	150C1F1	9550	45001	74013	0	0	0
Permanent loads yg= 1.2	150C1F2	9555	44761	73888	0	0	0
Wind angle: 90°	150C1F3	9560	44472	73751	0	0	0
	380C2F1	19100	90001	148026	19100	90001	-148026
	380C2F2	19109	89522	147776	19109	89522	-147776
	380C2F3	19120	88943	147502	19120	88943	-147502
	RTG	0	0	0	5171	23755	-39270
NL3/3	GW / opgw	4159	23320	33216	0	0	0
Wind, -5°C	150C1F1	10847	53876	82333	0	0	0
Permanent loads yg= 1.2	150C1F2	10866	52896	81446	0	0	0
Wind angle: 90°	150C1F3	10891	51714	80417	0	0	0
	380C2F1	21693	107752	164666	21693	107752	-164666
	380C2F2	21733	105792	162891	21733	105792	-162891
	380C2F3	21781	103428	160834	21781	103428	-160834
	RTG	0	0	0	8426	40301	-60203
NL3/4	GW / opgw	3216	13252	21556	0	0	0
Construction/maintenance, +5°C	150C1F1	10754	44316	72826	0	0	0
Permanent loads yg= 1.2	150C1F2	10758	44097	72736	0	0	0
Wind angle: 90°	150C1F3	10762	43831	72640	0	0	0
	380C2F1	21509	88633	145651	21509	88633	-145651
	380C2F2	21516	88194	145472	21516	88194	-145472
	380C2F3	21524	87662	145280	21524	87662	-145280
	RTG	0	0	0	6435	25765	-42750
NL3/1a	GW / opgw	2461	17001	23796	0	0	0
Wind, 10°C	150C1F1	9163	54340	78215	0	0	0
Permanent loads yg= 1.2	150C1F2	9190	52571	76325	0	0	0
Wind angle: -45°	150C1F3	9224	50410	74057	0	0	0
	380C2F1	18326	108679	156431	18898	75085	-127768
	380C2F2	18380	105142	152649	18899	74993	-127777
	380C2F3	18449	100820	148114	18900	74880	-127792
	RTG	0	0	0	5124	20380	-34754
NL3/1b	GW / opgw	2576	12740	20330	0	0	0
Wind, -20°C	150C1F1	9532	45851	74527	0	0	0
Permanent loads yg= 1.2	150C1F2	9539	45521	74316	0	0	0
Wind angle: -45°	150C1F3	9548	45124	74081	0	0	0
	380C2F1	19065	91702	149053	19168	85285	-147015
	380C2F2	19079	91042	148632	19168	85260	-147025
	380C2F3	19095	90248	148162	19168	85230	-147037
	RTG	0	0	0	5185	22666	-39091
NL3/3	GW / opgw	4124	25850	35846	0	0	0
Wind, -5°C	150C1F1	10779	57342	85655	0	0	0
Permanent loads yg= 1.2	150C1F2	10805	56002	84343	0	0	0
Wind angle: -45°	150C1F3	10836	54379	82799	0	0	0
	380C2F1	21558	114684	171311	22027	89632	-153285
	380C2F2	21609	112005	168685	22028	89557	-153301
	380C2F3	21673	108759	165599	22028	89465	-153323
	RTG	0	0	0	8568	32350	-55175
NL3/4	GW / opgw	3211	13548	21728	0	0	0
Construction/maintenance, +5°C	150C1F1	10741	45090	73206	0	0	0
Permanent loads yg= 1.2	150C1F2	10746	44791	73048	0	0	0
Wind angle: -45°	150C1F3	10753	44429	72875	0	0	0
	380C2F1	21483	90180	146412	21558	84208	-145150
	380C2F2	21493	89582	146097	21558	84184	-145160
	380C2F3	21505	88858	145750	21559	84154	-145174
	RTG	0	0	0	6444	24773	-42740
NL3/1a	GW / opgw	1915	9180	14387	0	0	0
Wind, 10°C	150C1F1	7081	32383	51830	0	0	0
Permanent loads yg= 0.9	150C1F2	7087	32068	51599	0	0	0
Wind angle: 0°	150C1F3	7094	31690	51338	0	0	0
	380C2F1	14162	64767	103661	14162	64767	-103661
	380C2F2	14174	64137	103198	14174	64137	-103198
	380C2F3	14187	63379	102675	14187	63379	-102675
	RTG	0	0	0	3843	17260	-27865
NL3/1b	GW / opgw	1961	9402	15819	0	0	0
Wind, -20°C	150C1F1	7243	35045	59390	0	0	0
Permanent loads yg= 0.9	150C1F2	7244	34984	59381	0	0	0
Wind angle: 0°	150C1F3	7245	34910	59374	0	0	0
	380C2F1	14486	70090	118780	14486	70090	-118780
	380C2F2	14487	69968	118762	14487	69968	-118762
	380C2F3	14489	69819	118747	14489	69819	-118747
	RTG	0	0	0	3914	18394	-31236

NL3/3	GW / opgw	3634	15856	25073	0	0	0
Wind, -5°C	150C1F1	8663	39148	64147	0	0	0
Permanent loads yg= 0.9	150C1F2	8667	38922	64025	0	0	0
Wind angle: 0°	150C1F3	8672	38649	63891	0	0	0
	380C2F1	17326	78296	128293	17326	78296	-128293
	380C2F2	17334	77844	128050	17334	77844	-128050
	380C2F3	17344	77298	127782	17344	77298	-127782
	RTG	0	0	0	7295	30218	-49140
NL3/4	GW / opgw	2595	10591	17879	0	0	0
Construction/maintenance, +5°C	150C1F1	8455	35123	59524	0	0	0
Permanent loads yg= 0.9	150C1F2	8455	35066	59523	0	0	0
Wind angle: 0°	150C1F3	8456	34997	59524	0	0	0
	380C2F1	16909	70245	119047	16909	70245	-119047
	380C2F2	16910	70133	119045	16910	70133	-119045
	380C2F3	16912	69994	119048	16912	69994	-119048
	RTG	0	0	0	5185	20962	-35683
NL3/1a	GW / opgw	1932	8144	13701	0	0	0
Wind, 10°C	150C1F1	7121	29832	50530	0	0	0
Permanent loads yg= 0.9	150C1F2	7122	29782	50528	0	0	0
Wind angle: 45°	150C1F3	7122	29721	50527	0	0	0
	380C2F1	14243	59665	101060	13629	99184	-139988
	380C2F2	14244	59565	101055	13675	95154	-135355
	380C2F3	14245	59442	101054	13738	90178	-129687
	RTG	0	0	0	3716	25224	-36107
NL3/1b	GW / opgw	1963	9195	15802	0	0	0
Wind, -20°C	150C1F1	7248	34505	59414	0	0	0
Permanent loads yg= 0.9	150C1F2	7248	34493	59418	0	0	0
Wind angle: 45°	150C1F3	7248	34477	59424	0	0	0
	380C2F1	14496	69011	118828	14356	76503	-122731
	380C2F2	14496	68985	118836	14374	75701	-122063
	380C2F3	14496	68954	118847	14396	74739	-121302
	RTG	0	0	0	3888	19852	-32053
NL3/3	GW / opgw	3657	14462	24409	0	0	0
Wind, -5°C	150C1F1	8691	37264	63563	0	0	0
Permanent loads yg= 0.9	150C1F2	8691	37225	63567	0	0	0
Wind angle: 45°	150C1F3	8691	37176	63573	0	0	0
	380C2F1	17381	74528	127125	16843	103562	-152051
	380C2F2	17382	74449	127133	16894	100477	-148723
	380C2F3	17382	74352	127147	16961	96716	-144744
	RTG	0	0	0	7104	40646	-58458
NL3/4	GW / opgw	2596	10405	17897	0	0	0
Construction/maintenance, +5°C	150C1F1	8458	34612	59598	0	0	0
Permanent loads yg= 0.9	150C1F2	8458	34600	59603	0	0	0
Wind angle: 45°	150C1F3	8458	34584	59609	0	0	0
	380C2F1	16916	69224	119196	16818	75923	-121720
	380C2F2	16916	69199	119206	16831	75226	-121234
	380C2F3	16916	69168	119218	16847	74387	-120688
	RTG	0	0	0	5168	22180	-36085
NL3/1a	GW / opgw	1846	13927	19581	0	0	0
Wind, 10°C	150C1F1	6880	44306	63960	0	0	0
Permanent loads yg= 0.9	150C1F2	6901	42767	62237	0	0	0
Wind angle: 90°	150C1F3	6930	40884	60161	0	0	0
	380C2F1	13759	88613	127920	13759	88613	-127920
	380C2F2	13803	85535	124474	13803	85535	-124474
	380C2F3	13859	81768	120321	13859	81768	-120321
	RTG	0	0	0	3750	22733	-33281
NL3/1b	GW / opgw	1943	10289	16426	0	0	0
Wind, -20°C	150C1F1	7201	37221	60539	0	0	0
Permanent loads yg= 0.9	150C1F2	7208	36933	60329	0	0	0
Wind angle: 90°	150C1F3	7215	36586	60094	0	0	0
	380C2F1	14402	74442	121078	14402	74442	-121078
	380C2F2	14415	73865	120659	14415	73865	-120659
	380C2F3	14430	73172	120187	14430	73172	-120187
	RTG	0	0	0	3897	19385	-31702
NL3/3	GW / opgw	3525	22131	31158	0	0	0
Wind, -5°C	150C1F1	8491	47772	71763	0	0	0
Permanent loads yg= 0.9	150C1F2	8513	46628	70591	0	0	0
Wind angle: 90°	150C1F3	8540	45243	69211	0	0	0
	380C2F1	16983	95544	143525	16983	95544	-143525
	380C2F2	17026	93256	141182	17026	93256	-141182
	380C2F3	17080	90486	138422	17080	90486	-138422
	RTG	0	0	0	7158	37363	-55115

NL3/4	GW / opgw	2583	11319	18208	0	0	0
Construction/maintenance, +5°C	150C1F1	8426	37064	60264	0	0	0
Permanent loads yg= 0.9	150C1F2	8430	36811	60117	0	0	0
Wind angle: 90°	150C1F3	8435	36507	59954	0	0	0
	380C2F1	16851	74127	120529	16851	74127	-120529
	380C2F2	16860	73623	120235	16860	73623	-120235
	380C2F3	16871	73014	119909	16871	73014	-119909
	RTG	0	0	0	5174	21802	-35887
NL3/1a	GW / opgw	1829	15923	21930	0	0	0
Wind, 10°C	150C1F1	6815	49592	69994	0	0	0
Permanent loads yg= 0.9	150C1F2	6838	47577	67677	0	0	0
Wind angle: -45°	150C1F3	6869	45089	64843	0	0	0
	380C2F1	13629	99184	139988	14243	59665	-101060
	380C2F2	13675	95154	135355	14244	59565	-101055
	380C2F3	13738	90178	129687	14245	59442	-101054
	RTG	0	0	0	3860	16098	-27338
NL3/1b	GW / opgw	1934	10716	16824	0	0	0
Wind, -20°C	150C1F1	7178	38252	61365	0	0	0
Permanent loads yg= 0.9	150C1F2	7187	37851	61031	0	0	0
Wind angle: -45°	150C1F3	7198	37369	60651	0	0	0
	380C2F1	14356	76503	122731	14496	69011	-118828
	380C2F2	14374	75701	122063	14496	68985	-118836
	380C2F3	14396	74739	121302	14496	68954	-118847
	RTG	0	0	0	3916	18143	-31257
NL3/3	GW / opgw	3493	24835	34090	0	0	0
Wind, -5°C	150C1F1	8421	51781	76025	0	0	0
Permanent loads yg= 0.9	150C1F2	8447	50238	74361	0	0	0
Wind angle: -45°	150C1F3	8481	48358	72372	0	0	0
	380C2F1	16843	103562	152051	17381	74528	-127125
	380C2F2	16894	100477	148723	17382	74449	-127133
	380C2F3	16961	96716	144744	17382	74352	-127147
	RTG	0	0	0	7317	28620	-48714
NL3/4	GW / opgw	2577	11658	18456	0	0	0
Construction/maintenance, +5°C	150C1F1	8409	37961	60860	0	0	0
Permanent loads yg= 0.9	150C1F2	8416	37613	60617	0	0	0
Wind angle: -45°	150C1F3	8423	37193	60344	0	0	0
	380C2F1	16818	75923	121720	16916	69224	-119196
	380C2F2	16831	75226	121234	16916	69199	-119206
	380C2F3	16847	74387	120688	16916	69168	-119218
	RTG	0	0	0	5186	20729	-35737

ZWW4HM400+5

Loadcases for tower strength (Special limit state)

		Ahead			Back		
Loadcase according to 50341-3-15	Att. Point	Vertical [N]	Transversal [N]	Longitudinal [N]	Vertical [N]	Transversal [N]	Longitudinal [N]
NL3/1a	GW / opgw	2552	11153	17805	2552	11153	-17805
Wind, 10°C	150C1F1	9419	39740	64571	9419	39740	-64571
Permanent loads yg= 1.2	150C1F2	9423	39476	64429	9423	39476	-64429
Wind angle: 0°	150C1F3	9429	39158	64272	9429	39158	-64272
	380C2F1	18838	79480	129142	18838	79480	-129142
	380C2F2	18847	78952	128857	18847	78952	-128857
	380C2F3	18857	78315	128544	18857	78315	-128544
	RTG	0	0	0	5112	21390	-35017
NL3/1b	GW / opgw	2597	11647	19708	2597	11647	-19708
Wind, -20°C	150C1F1	9580	43143	73416	9580	43143	-73416
Permanent loads yg= 1.2	150C1F2	9581	43088	73417	9581	43088	-73417
Wind angle: 0°	150C1F3	9581	43020	73422	9581	43020	-73422
	380C2F1	19160	86286	146831	19160	86286	-146831
	380C2F2	19162	86176	146834	19162	86176	-146834
	380C2F3	19163	86041	146843	19163	86041	-146843
	RTG	0	0	0	5183	22900	-39040
NL3/3	GW / opgw	4264	17601	28095	4264	17601	-28095
Wind, -5°C	150C1F1	10993	46508	76894	10993	46508	-76894
Permanent loads yg= 1.2	150C1F2	10996	46311	76822	10996	46311	-76822
Wind angle: 0°	150C1F3	10999	46071	76746	10999	46071	-76746
	380C2F1	21985	93017	153789	21985	93017	-153789
	380C2F2	21991	92622	153644	21991	92622	-153644
	380C2F3	21999	92141	153491	21999	92141	-153491
	RTG	0	0	0	8550	33841	-55415
NL3/4	GW / opgw	3225	12601	21361	3225	12601	-21361
Construction/maintenance, +5°C	150C1F1	10777	42589	72456	10777	42589	-72456
Permanent loads yg= 1.2	150C1F2	10777	42537	72461	10777	42537	-72461
Wind angle: 0°	150C1F3	10777	42472	72471	10777	42472	-72471
	380C2F1	21553	85178	144911	21553	85178	-144911
	380C2F2	21554	85073	144923	21554	85073	-144923
	380C2F3	21555	84943	144941	21555	84943	-144941
	RTG	0	0	0	6443	24997	-42671
NL3/1a	GW / opgw	2565	10276	17394	2461	17001	-23796
Wind, 10°C	150C1F1	9449	37542	63884	9163	54340	-78215
Permanent loads yg= 1.2	150C1F2	9450	37497	63889	9190	52571	-76325
Wind angle: 45°	150C1F3	9450	37440	63896	9224	50410	-74057
	380C2F1	18898	75085	127768	18326	108679	-156431
	380C2F2	18899	74993	127777	18380	105142	-152649
	380C2F3	18900	74880	127792	18449	100820	-148114
	RTG	0	0	0	4994	28099	-41087
NL3/1b	GW / opgw	2598	11459	19723	2576	12740	-20330
Wind, -20°C	150C1F1	9584	42642	73508	9532	45851	-74527
Permanent loads yg= 1.2	150C1F2	9584	42630	73512	9539	45521	-74316
Wind angle: 45°	150C1F3	9584	42615	73519	9548	45124	-74081
	380C2F1	19168	85285	147015	19065	91702	-149053
	380C2F2	19168	85260	147025	19079	91042	-148632
	380C2F3	19168	85230	147037	19095	90248	-148162
	RTG	0	0	0	5164	24142	-39484
NL3/3	GW / opgw	4284	16321	27629	4124	25850	-35846
Wind, -5°C	150C1F1	11014	44816	76643	10779	57342	-85655
Permanent loads yg= 1.2	150C1F2	11014	44779	76650	10805	56002	-84343
Wind angle: 45°	150C1F3	11014	44732	76661	10836	54379	-82799
	380C2F1	22027	89632	153285	21558	114684	-171311
	380C2F2	22028	89557	153301	21609	112005	-168685
	380C2F3	22028	89465	153323	21673	108759	-165599
	RTG	0	0	0	8372	43299	-63052
NL3/4	GW / opgw	3226	12425	21395	3211	13548	-21728
Construction/maintenance, +5°C	150C1F1	10779	42104	72575	10741	45090	-73206
Permanent loads yg= 1.2	150C1F2	10779	42092	72580	10746	44791	-73048
Wind angle: 45°	150C1F3	10779	42077	72587	10753	44429	-72875
	380C2F1	21558	84208	145150	21483	90180	-146412
	380C2F2	21558	84184	145160	21493	89582	-146097
	380C2F3	21559	84154	145174	21505	88858	-145750
	RTG	0	0	0	6430	26100	-42874
NL3/1a	GW / opgw	2484	15204	21794	2484	15204	-21794
Wind, 10°C	150C1F1	9236	49735	73361	9236	49735	-73361
Permanent loads yg= 1.2	150C1F2	9258	48417	72020	9258	48417	-72020
Wind angle: 90°	150C1F3	9287	46818	70436	9287	46818	-70436
	380C2F1	18471	99471	146722	18471	99471	-146722
	380C2F2	18516	96834	144041	18516	96834	-144041
	380C2F3	18573	93636	140873	18573	93636	-140873
	RTG	0	0	0	5029	25959	-38867

NL3/1b	GW / opgw	2583	12391	20066	2583	12391	-20066
Wind, -20°C	150C1F1	9550	45001	74013	9550	45001	-74013
Permanent loads yg= 1.2	150C1F2	9555	44761	73888	9555	44761	-73888
Wind angle: 90°	150C1F3	9560	44472	73751	9560	44472	-73751
	380C2F1	19100	90001	148026	19100	90001	-148026
	380C2F2	19109	89522	147776	19109	89522	-147776
	380C2F3	19120	88943	147502	19120	88943	-147502
	RTG	0	0	0	5171	23755	-39270
NL3/3	GW / opgw	4159	23320	33216	4159	23320	-33216
Wind, -5°C	150C1F1	10847	53876	82333	10847	53876	-82333
Permanent loads yg= 1.2	150C1F2	10866	52896	81446	10866	52896	-81446
Wind angle: 90°	150C1F3	10891	51714	80417	10891	51714	-80417
	380C2F1	21693	107752	164666	21693	107752	-164666
	380C2F2	21733	105792	162891	21733	105792	-162891
	380C2F3	21781	103428	160834	21781	103428	-160834
	RTG	0	0	0	8426	40301	-60203
NL3/4	GW / opgw	3216	13252	21556	3216	13252	-21556
Construction/maintenance, +5°C	150C1F1	10754	44316	72826	10754	44316	-72826
Permanent loads yg= 1.2	150C1F2	10758	44097	72736	10758	44097	-72736
Wind angle: 90°	150C1F3	10762	43831	72640	10762	43831	-72640
	380C2F1	21509	88633	145651	21509	88633	-145651
	380C2F2	21516	88194	145472	21516	88194	-145472
	380C2F3	21524	87662	145280	21524	87662	-145280
	RTG	0	0	0	6435	25765	-42750
NL3/1a	GW / opgw	2461	17001	23796	2565	10276	-17394
Wind, 10°C	150C1F1	9163	54340	78215	9449	37542	-63884
Permanent loads yg= 1.2	150C1F2	9190	52571	76325	9450	37497	-63889
Wind angle: -45°	150C1F3	9224	50410	74057	9450	37440	-63896
	380C2F1	18326	108679	156431	18898	75085	-127768
	380C2F2	18380	105142	152649	18899	74993	-127777
	380C2F3	18449	100820	148114	18900	74880	-127792
	RTG	0	0	0	5124	20380	-34754
NL3/1b	GW / opgw	2576	12740	20330	2598	11459	-19723
Wind, -20°C	150C1F1	9532	45851	74527	9584	42642	-73508
Permanent loads yg= 1.2	150C1F2	9539	45521	74316	9584	42630	-73512
Wind angle: -45°	150C1F3	9548	45124	74081	9584	42615	-73519
	380C2F1	19065	91702	149053	19168	85285	-147015
	380C2F2	19079	91042	148632	19168	85260	-147025
	380C2F3	19095	90248	148162	19168	85230	-147037
	RTG	0	0	0	5185	22666	-39091
NL3/3	GW / opgw	4124	25850	35846	4284	16321	-27629
Wind, -5°C	150C1F1	10779	57342	85655	11014	44816	-76643
Permanent loads yg= 1.2	150C1F2	10805	56002	84343	11014	44779	-76650
Wind angle: -45°	150C1F3	10836	54379	82799	11014	44732	-76661
	380C2F1	21558	114684	171311	22027	89632	-153285
	380C2F2	21609	112005	168685	22028	89557	-153301
	380C2F3	21673	108759	165599	22028	89465	-153323
	RTG	0	0	0	8568	32350	-55175
NL3/4	GW / opgw	3211	13548	21728	3226	12425	-21395
Construction/maintenance, +5°C	150C1F1	10741	45090	73206	10779	42104	-72575
Permanent loads yg= 1.2	150C1F2	10746	44791	73048	10779	42092	-72580
Wind angle: -45°	150C1F3	10753	44429	72875	10779	42077	-72587
	380C2F1	21483	90180	146412	21558	84208	-145150
	380C2F2	21493	89582	146097	21558	84184	-145160
	380C2F3	21505	88858	145750	21559	84154	-145174
	RTG	0	0	0	6444	24773	-42740
NL3/1a	GW / opgw	1915	9180	14387	1915	9180	-14387
Wind, 10°C	150C1F1	7081	32383	51830	7081	32383	-51830
Permanent loads yg= 0.9	150C1F2	7087	32068	51599	7087	32068	-51599
Wind angle: 0°	150C1F3	7094	31690	51338	7094	31690	-51338
	380C2F1	14162	64767	103661	14162	64767	-103661
	380C2F2	14174	64137	103198	14174	64137	-103198
	380C2F3	14187	63379	102675	14187	63379	-102675
	RTG	0	0	0	3843	17260	-27865
NL3/1b	GW / opgw	1961	9402	15819	1961	9402	-15819
Wind, -20°C	150C1F1	7243	35045	59390	7243	35045	-59390
Permanent loads yg= 0.9	150C1F2	7244	34984	59381	7244	34984	-59381
Wind angle: 0°	150C1F3	7245	34910	59374	7245	34910	-59374
	380C2F1	14486	70090	118780	14486	70090	-118780
	380C2F2	14487	69968	118762	14487	69968	-118762
	380C2F3	14489	69819	118747	14489	69819	-118747
	RTG	0	0	0	3914	18394	-31236

NL3/3	GW / opgw	3634	15856	25073	3634	15856	-25073
Wind, -5°C	150C1F1	8663	39148	64147	8663	39148	-64147
Permanent loads yg= 0.9	150C1F2	8667	38922	64025	8667	38922	-64025
Wind angle: 0°	150C1F3	8672	38649	63891	8672	38649	-63891
	380C2F1	17326	78296	128293	17326	78296	-128293
	380C2F2	17334	77844	128050	17334	77844	-128050
	380C2F3	17344	77298	127782	17344	77298	-127782
	RTG	0	0	0	7295	30218	-49140
NL3/4	GW / opgw	2595	10591	17879	2595	10591	-17879
Construction/maintenance, +5°C	150C1F1	8455	35123	59524	8455	35123	-59524
Permanent loads yg= 0.9	150C1F2	8455	35066	59523	8455	35066	-59523
Wind angle: 0°	150C1F3	8456	34997	59524	8456	34997	-59524
	380C2F1	16909	70245	119047	16909	70245	-119047
	380C2F2	16910	70133	119045	16910	70133	-119045
	380C2F3	16912	69994	119048	16912	69994	-119048
	RTG	0	0	0	5185	20962	-35683
NL3/1a	GW / opgw	1932	8144	13701	1829	15923	-21930
Wind, 10°C	150C1F1	7121	29832	50530	6815	49592	-69994
Permanent loads yg= 0.9	150C1F2	7122	29782	50528	6838	47577	-67677
Wind angle: 45°	150C1F3	7122	29721	50527	6869	45089	-64843
	380C2F1	14243	59665	101060	13629	99184	-139988
	380C2F2	14244	59565	101055	13675	95154	-135355
	380C2F3	14245	59442	101054	13738	90178	-129687
	RTG	0	0	0	3716	25224	-36107
NL3/1b	GW / opgw	1963	9195	15802	1934	10716	-16824
Wind, -20°C	150C1F1	7248	34505	59414	7178	38252	-61365
Permanent loads yg= 0.9	150C1F2	7248	34493	59418	7187	37851	-61031
Wind angle: 45°	150C1F3	7248	34477	59424	7198	37369	-60651
	380C2F1	14496	69011	118828	14356	76503	-122731
	380C2F2	14496	68985	118836	14374	75701	-122063
	380C2F3	14496	68954	118847	14396	74739	-121302
	RTG	0	0	0	3888	19852	-32053
NL3/3	GW / opgw	3657	14462	24409	3493	24835	-34090
Wind, -5°C	150C1F1	8691	37264	63563	8421	51781	-76025
Permanent loads yg= 0.9	150C1F2	8691	37225	63567	8447	50238	-74361
Wind angle: 45°	150C1F3	8691	37176	63573	8481	48358	-72372
	380C2F1	17381	74528	127125	16843	103562	-152051
	380C2F2	17382	74449	127133	16894	100477	-148723
	380C2F3	17382	74352	127147	16961	96716	-144744
	RTG	0	0	0	7104	40646	-58458
NL3/4	GW / opgw	2596	10405	17897	2577	11658	-18456
Construction/maintenance, +5°C	150C1F1	8458	34612	59598	8409	37961	-60860
Permanent loads yg= 0.9	150C1F2	8458	34600	59603	8416	37613	-60617
Wind angle: 45°	150C1F3	8458	34584	59609	8423	37193	-60344
	380C2F1	16916	69224	119196	16818	75923	-121720
	380C2F2	16916	69199	119206	16831	75226	-121234
	380C2F3	16916	69168	119218	16847	74387	-120688
	RTG	0	0	0	5168	22180	-36085
NL3/1a	GW / opgw	1846	13927	19581	1846	13927	-19581
Wind, 10°C	150C1F1	6880	44306	63960	6880	44306	-63960
Permanent loads yg= 0.9	150C1F2	6901	42767	62237	6901	42767	-62237
Wind angle: 90°	150C1F3	6930	40884	60161	6930	40884	-60161
	380C2F1	13759	88613	127920	13759	88613	-127920
	380C2F2	13803	85535	124474	13803	85535	-124474
	380C2F3	13859	81768	120321	13859	81768	-120321
	RTG	0	0	0	3750	22733	-33281
NL3/1b	GW / opgw	1943	10289	16426	1943	10289	-16426
Wind, -20°C	150C1F1	7201	37221	60539	7201	37221	-60539
Permanent loads yg= 0.9	150C1F2	7208	36933	60329	7208	36933	-60329
Wind angle: 90°	150C1F3	7215	36586	60094	7215	36586	-60094
	380C2F1	14402	74442	121078	14402	74442	-121078
	380C2F2	14415	73865	120659	14415	73865	-120659
	380C2F3	14430	73172	120187	14430	73172	-120187
	RTG	0	0	0	3897	19385	-31702
NL3/3	GW / opgw	3525	22131	31158	3525	22131	-31158
Wind, -5°C	150C1F1	8491	47772	71763	8491	47772	-71763
Permanent loads yg= 0.9	150C1F2	8513	46628	70591	8513	46628	-70591
Wind angle: 90°	150C1F3	8540	45243	69211	8540	45243	-69211
	380C2F1	16983	95544	143525	16983	95544	-143525
	380C2F2	17026	93256	141182	17026	93256	-141182
	380C2F3	17080	90486	138422	17080	90486	-138422
	RTG	0	0	0	7158	37363	-55115

NL3/4	GW / opgw	2583	11319	18208	2583	11319	-18208
Construction/maintenance, +5°C	150C1F1	8426	37064	60264	8426	37064	-60264
Permanent loads yg= 0.9	150C1F2	8430	36811	60117	8430	36811	-60117
Wind angle: 90°	150C1F3	8435	36507	59954	8435	36507	-59954
	380C2F1	16851	74127	120529	16851	74127	-120529
	380C2F2	16860	73623	120235	16860	73623	-120235
	380C2F3	16871	73014	119909	16871	73014	-119909
	RTG	0	0	0	5174	21802	-35887
NL3/1a	GW / opgw	1829	15923	21930	1932	8144	-13701
Wind, 10°C	150C1F1	6815	49592	69994	7121	29832	-50530
Permanent loads yg= 0.9	150C1F2	6838	47577	67677	7122	29782	-50528
Wind angle: -45°	150C1F3	6869	45089	64843	7122	29721	-50527
	380C2F1	13629	99184	139988	14243	59665	-101060
	380C2F2	13675	95154	135355	14244	59565	-101055
	380C2F3	13738	90178	129687	14245	59442	-101054
	RTG	0	0	0	3860	16098	-27338
NL3/1b	GW / opgw	1934	10716	16824	1963	9195	-15802
Wind, -20°C	150C1F1	7178	38252	61365	7248	34505	-59414
Permanent loads yg= 0.9	150C1F2	7187	37851	61031	7248	34493	-59418
Wind angle: -45°	150C1F3	7198	37369	60651	7248	34477	-59424
	380C2F1	14356	76503	122731	14496	69011	-118828
	380C2F2	14374	75701	122063	14496	68985	-118836
	380C2F3	14396	74739	121302	14496	68954	-118847
	RTG	0	0	0	3916	18143	-31257
NL3/3	GW / opgw	3493	24835	34090	3657	14462	-24409
Wind, -5°C	150C1F1	8421	51781	76025	8691	37264	-63563
Permanent loads yg= 0.9	150C1F2	8447	50238	74361	8691	37225	-63567
Wind angle: -45°	150C1F3	8481	48358	72372	8691	37176	-63573
	380C2F1	16843	103562	152051	17381	74528	-127125
	380C2F2	16894	100477	148723	17382	74449	-127133
	380C2F3	16961	96716	144744	17382	74352	-127147
	RTG	0	0	0	7317	28620	-48714
NL3/4	GW / opgw	2577	11658	18456	2596	10405	-17897
Construction/maintenance, +5°C	150C1F1	8409	37961	60860	8458	34612	-59598
Permanent loads yg= 0.9	150C1F2	8416	37613	60617	8458	34600	-59603
Wind angle: -45°	150C1F3	8423	37193	60344	8458	34584	-59609
	380C2F1	16818	75923	121720	16916	69224	-119196
	380C2F2	16831	75226	121234	16916	69199	-119206
	380C2F3	16847	74387	120688	16916	69168	-119218
	RTG	0	0	0	5186	20729	-35737

ZWW4HM400+5

Loadcases for tower strength (serviceability limit state)

		Ahead			Back		
Loadcase according to 50341-3-15	Att. Point	Vertical [N]	Transversal [N]	Longitudinal [N]	Vertical [N]	Transversal [N]	Longitudinal [N]
NL4/1a	GW / opgw	2118	10348	15983	2118	10348	-15983
Wind, 10°C	150C1F1	7840	36100	57066	7840	36100	-57066
Permanent loads yg= 1.0	150C1F2	7848	35673	56729	7848	35673	-56729
Wind angle: 0°	150C1F3	7857	35160	56346	7857	35160	-56346
	380C2F1	15680	72200	114132	15680	72200	-114132
	380C2F2	15696	71346	113458	15696	71346	-113458
	380C2F3	15715	70319	112692	15715	70319	-112692
	RTG	0	0	0	4257	19215	-30677
NL4/1b	GW / opgw	2174	10121	17142	2174	10121	-17142
Wind, -20°C	150C1F1	8026	37695	64198	8026	37695	-64198
Permanent loads yg= 1.0	150C1F2	8026	37649	64198	8026	37649	-64198
Wind angle: 0°	150C1F3	8027	37591	64201	8027	37591	-64201
	380C2F1	16051	75390	128396	16051	75390	-128396
	380C2F2	16052	75297	128396	16052	75297	-128396
	380C2F3	16053	75183	128401	16053	75183	-128401
	RTG	0	0	0	4339	19878	-33910
NL4/3	GW / opgw	7195	24908	41148	7195	24908	-41148
Wind, -5°C	150C1F1	12420	50407	84256	12420	50407	-84256
Permanent loads yg= 1.0	150C1F2	12422	50261	84229	12422	50261	-84229
Wind angle: 0°	150C1F3	12425	50083	84204	12425	50083	-84204
	380C2F1	24841	100813	168512	24841	100813	-168512
	380C2F2	24845	100522	168458	24845	100522	-168458
	380C2F3	24849	100166	168407	24849	100166	-168407
	RTG	0	0	0	14415	49043	-82277
NL4/4	GW / opgw	2696	10875	18448	2696	10875	-18448
Construction/maintenance, +5°C	150C1F1	9012	36833	62704	9012	36833	-62704
Permanent loads yg= 1.0	150C1F2	9013	36789	62708	9013	36789	-62708
Wind angle: 0°	150C1F3	9013	36734	62715	9013	36734	-62715
	380C2F1	18025	73666	125409	18025	73666	-125409
	380C2F2	18026	73577	125417	18026	73577	-125417
	380C2F3	18026	73468	125430	18026	73468	-125430
	RTG	0	0	0	5387	21568	-36835
NL4/1a	GW / opgw	2143	8947	14976	2018	19093	-25827
Wind, 10°C	150C1F1	7897	32660	55106	7515	58719	-81314
Permanent loads yg= 1.0	150C1F2	7898	32594	55099	7540	56140	-78350
Wind angle: 45°	150C1F3	7899	32513	55094	7575	52934	-74691
	380C2F1	15794	65321	110213	15030	117438	-162628
	380C2F2	15796	65188	110199	15081	112279	-156701
	380C2F3	15797	65026	110189	15151	105869	-149381
	RTG	0	0	0	4099	29772	-41845
NL4/1b	GW / opgw	2175	9962	17151	2156	11057	-17705
Wind, -20°C	150C1F1	8029	37274	64267	7984	40009	-65224
Permanent loads yg= 1.0	150C1F2	8029	37263	64271	7990	39726	-65033
Wind angle: 45°	150C1F3	8029	37251	64276	7997	39385	-64820
	380C2F1	16058	74547	128534	15968	80018	-130448
	380C2F2	16058	74527	128542	15980	79451	-130067
	380C2F3	16058	74501	128553	15994	78769	-129640
	RTG	0	0	0	4322	20936	-34320
NL4/3	GW / opgw	7203	24091	41193	7109	29619	-43859
Wind, -5°C	150C1F1	12433	49124	84267	12273	58094	-89235
Permanent loads yg= 1.0	150C1F2	12433	49094	84276	12292	57142	-88425
Wind angle: 45°	150C1F3	12433	49057	84288	12316	55993	-87492
	380C2F1	24866	98247	168534	24546	116189	-178470
	380C2F2	24866	98188	168552	24585	114284	-176850
	380C2F3	24867	98114	168576	24632	111986	-174984
	RTG	0	0	0	14329	54424	-84306
NL4/4	GW / opgw	2697	10727	18475	2684	11681	-18784
Construction/maintenance, +5°C	150C1F1	9015	36426	62798	8982	38959	-63403
Permanent loads yg= 1.0	150C1F2	9015	36416	62803	8987	38703	-63260
Wind angle: 45°	150C1F3	9015	36403	62808	8992	38394	-63103
	380C2F1	18029	72851	125597	17964	77918	-126806
	380C2F2	18029	72831	125605	17973	77407	-126521
	380C2F3	18029	72806	125616	17984	76789	-126207
	RTG	0	0	0	5375	22502	-37031
NL4/1a	GW / opgw	2036	16567	22873	2036	16567	-22873
Wind, 10°C	150C1F1	7587	51921	73541	7587	51921	-73541
Permanent loads yg= 1.0	150C1F2	7612	49920	71284	7612	49920	-71284
Wind angle: 90°	150C1F3	7646	47457	68538	7646	47457	-68538
	380C2F1	15175	103841	147081	15175	103841	-147081
	380C2F2	15224	99840	142569	15224	99840	-142569
	380C2F3	15291	94913	137076	15291	94913	-137076
	RTG	0	0	0	4137	26533	-38143

NL4/1b	GW / opgw	2162	10757	17468	2162	10757	-17468
Wind, -20°C	150C1F1	7999	39279	64758	7999	39279	-64758
Permanent loads yg= 1.0	150C1F2	8003	39074	64644	8003	39074	-64644
Wind angle: 90°	150C1F3	8008	38826	64519	8008	38826	-64519
	380C2F1	15999	78558	129517	15999	78558	-129517
	380C2F2	16007	78147	129288	16007	78147	-129288
	380C2F3	16016	77652	129037	16016	77652	-129037
	RTG	0	0	0	4328	20605	-34127
NL4/3	GW / opgw	7138	28135	42750	7138	28135	-42750
Wind, -5°C	150C1F1	12323	55638	87215	12323	55638	-87215
Permanent loads yg= 1.0	150C1F2	12338	54947	86693	12338	54947	-86693
Wind angle: 90°	150C1F3	12354	54115	86100	12354	54115	-86100
	380C2F1	24647	111276	174429	24647	111276	-174429
	380C2F2	24675	109894	173386	24675	109894	-173386
	380C2F3	24709	108229	172200	24709	108229	-172200
	RTG	0	0	0	14360	52751	-83363
NL4/4	GW / opgw	2688	11428	18630	2688	11428	-18630
Construction/maintenance, +5°C	150C1F1	8993	38299	63058	8993	38299	-63058
Permanent loads yg= 1.0	150C1F2	8996	38112	62976	8996	38112	-62976
Wind angle: 90°	150C1F3	9000	37885	62888	9000	37885	-62888
	380C2F1	17987	76597	126117	17987	76597	-126117
	380C2F2	17993	76223	125953	17993	76223	-125953
	380C2F3	18000	75770	125776	18000	75770	-125776
	RTG	0	0	0	5380	22217	-36918
NL4/1a	GW / opgw	2018	19093	25827	2143	8947	-14976
Wind, 10°C	150C1F1	7515	58719	81314	7897	32660	-55106
Permanent loads yg= 1.0	150C1F2	7540	56140	78350	7898	32594	-55099
Wind angle: -45°	150C1F3	7575	52934	74691	7899	32513	-55094
	380C2F1	15030	117438	162628	15794	65321	-110213
	380C2F2	15081	112279	156701	15796	65188	-110199
	380C2F3	15151	105869	149381	15797	65026	-110189
	RTG	0	0	0	4282	17649	-29871
NL4/1b	GW / opgw	2156	11057	17705	2175	9962	-17151
Wind, -20°C	150C1F1	7984	40009	65224	8029	37274	-64267
Permanent loads yg= 1.0	150C1F2	7990	39726	65033	8029	37263	-64271
Wind angle: -45°	150C1F3	7997	39385	64820	8029	37251	-64276
	380C2F1	15968	80018	130448	16058	74547	-128534
	380C2F2	15980	79451	130067	16058	74527	-128542
	380C2F3	15994	78769	129640	16058	74501	-128553
	RTG	0	0	0	4340	19681	-33949
NL4/3	GW / opgw	7109	29619	43859	7203	24091	-41193
Wind, -5°C	150C1F1	12273	58094	89235	12433	49124	-84267
Permanent loads yg= 1.0	150C1F2	12292	57142	88425	12433	49094	-84276
Wind angle: -45°	150C1F3	12316	55993	87492	12433	49057	-84288
	380C2F1	24546	116189	178470	24866	98247	-168534
	380C2F2	24585	114284	176850	24866	98188	-168552
	380C2F3	24632	111986	174984	24867	98114	-168576
	RTG	0	0	0	14422	48031	-82477
NL4/4	GW / opgw	2684	11681	18784	2697	10727	-18475
Construction/maintenance, +5°C	150C1F1	8982	38959	63403	9015	36426	-62798
Permanent loads yg= 1.0	150C1F2	8987	38703	63260	9015	36416	-62803
Wind angle: -45°	150C1F3	8992	38394	63103	9015	36403	-62808
	380C2F1	17964	77918	126806	18029	72851	-125597
	380C2F2	17973	77407	126521	18029	72831	-125605
	380C2F3	17984	76789	126207	18029	72806	-125616
	RTG	0	0	0	5388	21379	-36890

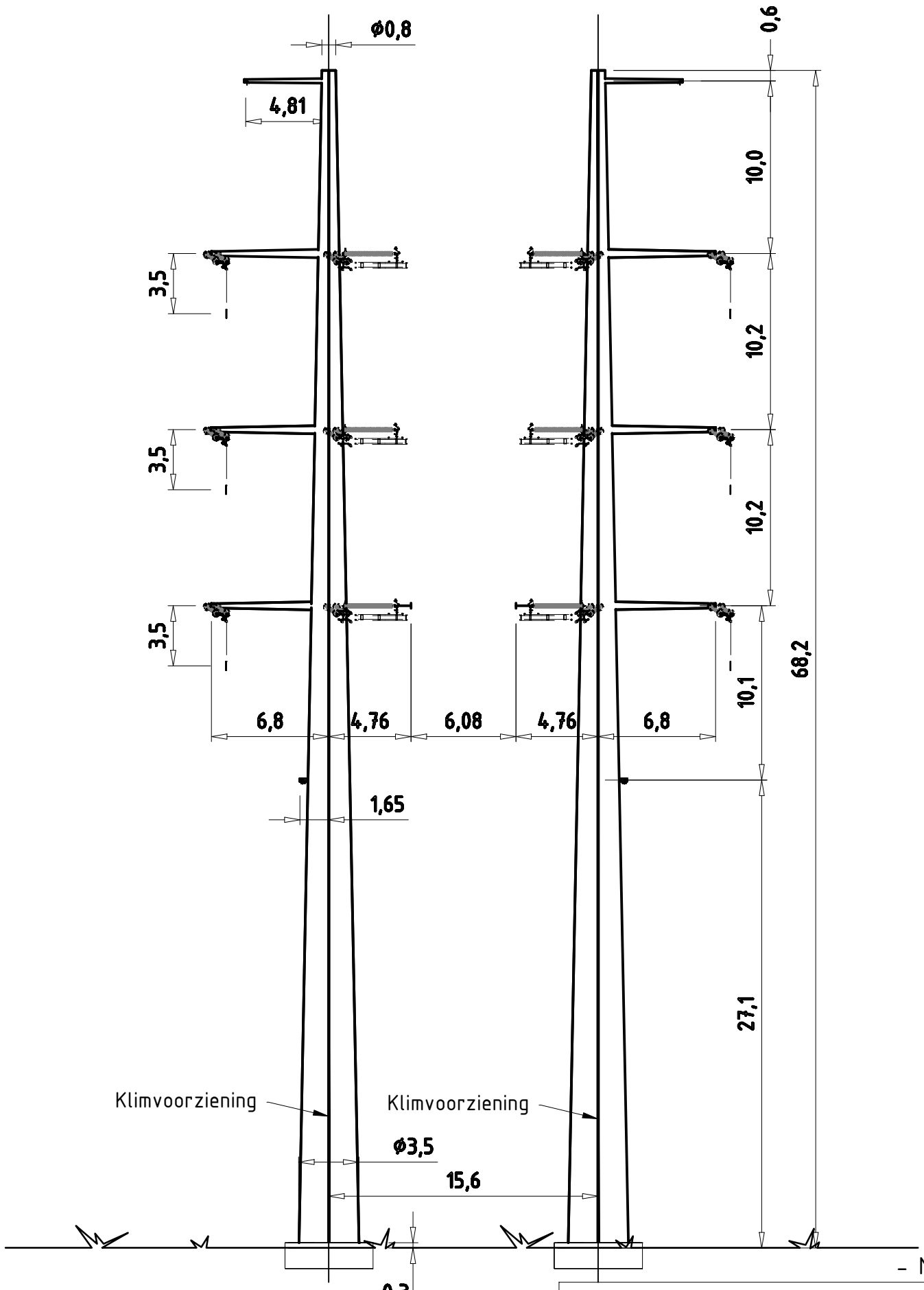

- Maatvoering indicatief

T.B.V. Vergunnings aanvraag

Wintrack
Masttype: ZWW4HM400+5

- Trekparameter 1800m
- 2x380 / 2x150 Hoekmast
- 400m Veldlengte
- 120°-130° Lijnhoek
- Uitvoering Staal of Beton
- Kleurstelling hoofdelement:
  Ral 9018 Papyrus white
- Kleurstelling Appendages:
  Ral 7021 Black grey

5.0	05-03-2014	Increased space between poles and increased traverse length
4.0	21-02-2014	Modified top/botom diameter 0.8/3.5
3.0	03-02-2014	Modified top/botom diameter

KEMA DNV

Projectname: Engineering verbinding ZW380

Third angle projection:

Drawing no.: 74102194-035-096V

Design state: Definitief		Scale: 1:300	
Drawn by: RBE	05-03-2014	Units: m	
Checked by: AJP	05-03-2014	Project no: 000.145	
Approved by: AW	05-03-2014	Company: TenneT	

Description: Wintrack Masttype ZWW4HM400+5

Revision: 5.0

Format: A3

DNV KEMA Energy & Sustainability, Utrechtseweg 310, 6812 AR Arnhem, tel: +31 26 3 56 91 11, www.dnvkema.com

© 2014 - Filename: 74102194-035-096 - ZWW4HM400+5 Rev5.0.dwg

ZWW4S450

Fundatie berekening

Bijlage CS

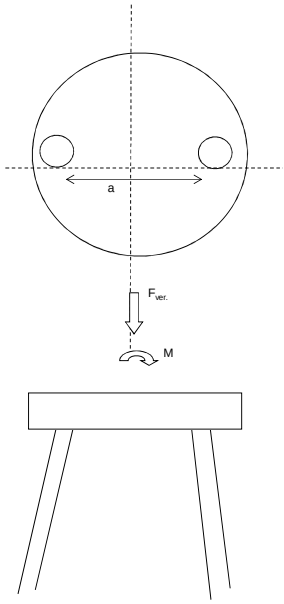

Fundatie ontwerp:
Heipaal

Afmetingen	b	400	mm	
	d	400	mm	
omtrek paal	$O_{p;gem}$	1,6	m	
schoorstand		8	:1	
α		7,125	graden	
Opstort	Diameter	4,0	m	
	Hoogte	1,8	m	
	Inhoud	22,6	m^3	
	e.g.	543	kN	
Onderplaat	Diameter	10,0	m	
	Hoogte	1,0	m	
	Inhoud	79	m^3	
	e.g.	1885	kN	
Hart paal tov rand fund.		0,6	m	
Optreden krachten				
e.g. mast		565	kN	
Fgeleiders		188	kN	
Maximale dwarskracht		581	kN	
Fmax vert (druk)		867	kN	
Fmin vert (trek)		650	kN	
Maximale moment		28001	kNm	
Moment				
F_{diag}		3393	kN	
F_{hor}		581	kN	
F_{ver}		3367	kN	
M_{hor} (tgv F_{hor})		1628	kNm	
M_{tot}		29628	kNm	reductie door opwaarste kracht water
F=M/a		3367	kN	
Verticaal reactiekracht				
Fwater (trek)		1012	kN	
Fgrond (druk)		1781	kN	
Fgrond (trek)		1484	kN	
Fdmax (druk)		2959	kN	
Ftmax (trek)		1479	kN	
Fdtot (druk)		6326	kN	
Fttot (trek)		1888	kN	
Palen druk		6	(-)	
Palen trek		6	(-)	
Totaal palen		12	(-)	Per fundering

ZWW4S450

TREKPALEN volgens CUR 2001-4 par. 8.

$$F_{r;trek;d} = \int_0^L O_{p;gem} \times p_{r;z;d} \times dz$$

Bijlage CS

Bepaling opneembare paalbelasting op druk

heipaal

Afmeting paal	b	0,40	m
	b	0,40	m
omtrek paal	$O_{p;gem}$	1,60	m
paalfactor	α t	0,007	
aantal palen	M	1	
aantal sonderingen	N	1	
factor invloed aantal sonderingen	ξ	0,75	
conusweerstand over wrijvingstraject	$q_{c;z;max}$	15	MPa
	$q_{c;z;rep}$	11,25	MPa
materiaalfactor	$\gamma_{m;b4}$	1,4	
factor, wisselende belastingen	$\gamma_{m;var;qc}$	1,5	
	$q_{c;z;d}$	5,36	MPa
	$p_{r;z;d}$	37,5	kN/m^2
	$F_{r;trek;d;i}$	60,0	kN/m^1
	$F_{trek,d}$	596	kN/m

Bepaling opneembare trekbelasting paal

sondering	diepte		$q_{c;z}$		$P_{r;max;schacht;i}$	$F_{r;trek;d;i}$	$F_{trek,d}$
	m	m	MPa	α t	kPa	kN	kN
	0	-1	0	0,007	0,00	0,00	0
	-1	-2	0	0,007	0,00	0,00	0
	-2	-3	0	0,007	0,00	0,00	0
	-3	-4	0	0,007	0,00	0,00	0
	-4	-5	0	0,007	0,00	0,00	0
	-5	-6	0	0,007	0,00	0,00	0
	-6	-7	0	0,007	0,00	0,00	0
	-7	-8	0	0,007	0,00	0,00	0
	-8	-9	1	0,007	2,50	4,00	4
	-9	-10	3	0,007	7,50	12,00	16
	-10	-11	2	0,007	5,00	8,00	24
	-11	-12	0	0,007	0,00	0,00	24
	-12	-13	3	0,007	7,50	12,00	36
	-13	-14	2	0,007	5,00	8,00	44
	-14	-15	4	0,007	10,00	16,00	60
	-15	-16	10	0,007	25,00	40,00	100
	-16	-17	9	0,007	22,50	36,00	136
	-17	-18	8	0,007	20,00	32,00	168
	-18	-19	12	0,007	30,00	48,00	216
	-19	-20	12	0,007	30,00	48,00	264
	-20	-21	10	0,007	25,00	40,00	304
	-21	-22	11	0,007	27,50	44,00	348
	-22	-23	11	0,007	27,50	44,00	392
	-23	-24	12	0,007	30,00	48,00	440
	-24	-25	12	0,007	30,00	48,00	488
	-25	-26	12	0,007	30,00	48,00	536
	-26	-27	15	0,007	37,50	60,00	596

$F_{trek,d}$	596	kN	paalafmeting	400	mm, paalpuntnivo	-27,00	m

Paalgroep factor	10%	
$F_{trek,d}$	**536,4**	kN

ZWW4S450

DRUKPALEN

FUNDERINGSCONSTRUCTIE
Toelaatbare paalbelastingen

Bijlage CS

Bepaling opneembare paalbelasting op druk

heipaal

		v		
	diameter	a	2	mm
			2	mm
	Deq		0,001808	

maximale puntweerstand

$P_{r;max;punt;i}$		11,25	MN/m²
paalklasse factor	α_p	1,00	
factor paalvoet	β	1	
hoek van inwendige vrijwing van paalvoet	ϕ	40	
factor dwarsdoorsnede paalvoet	s	1,00	
minimale waarde neergaande deel	$q_{c;ll;gem}$	9,00	MN/m²
gem. sondeerwaarde neergaande deel	$q_{c;l;gem}$	14,00	MN/m²
gem. sondeerwaarde opgaande deel	$q_{c;ll;gem}$	11,00	MN/m²

maximale paalschachtwrijving

$P_{r;max;schacht;i}$		0,05	MN/m²

waarin:

paalfactor	α_s	0,010	
conusweerstand over wrijvingstraject	$q_{c;z;a}$	5,00	MN/m²

maximale draagkracht alleenstaande paal

$\mathbf{F_{r;max;i}}$		0,00	MN

waarin:

$\mathbf{F_{r;max;punt;i}}$		0,00	MN
paalpunt oppervlak	A_{punt}	0,00	m²
$\mathbf{F_{r;max;schacht;i}}$		0,00	MN
gemiddelde paalomtrek	$O_{p;gem}$	0,01	m
lengte schachtwrijving	Δl	15,00	m

Bepaling rekenwaarde van de maximale draagkracht

$F_{r;paal;max;d}$	MN	0,00	MN
materiaalfactor grond	$\gamma_{m;b}$	1,20	
waarde afhankelijk van aantal palen en aantal sonderingen	$\xi_{1;N}$	0,75	

$F_{r;paal;max;d}$	3	kN	mm, paalpuntnivo	-27,00	m

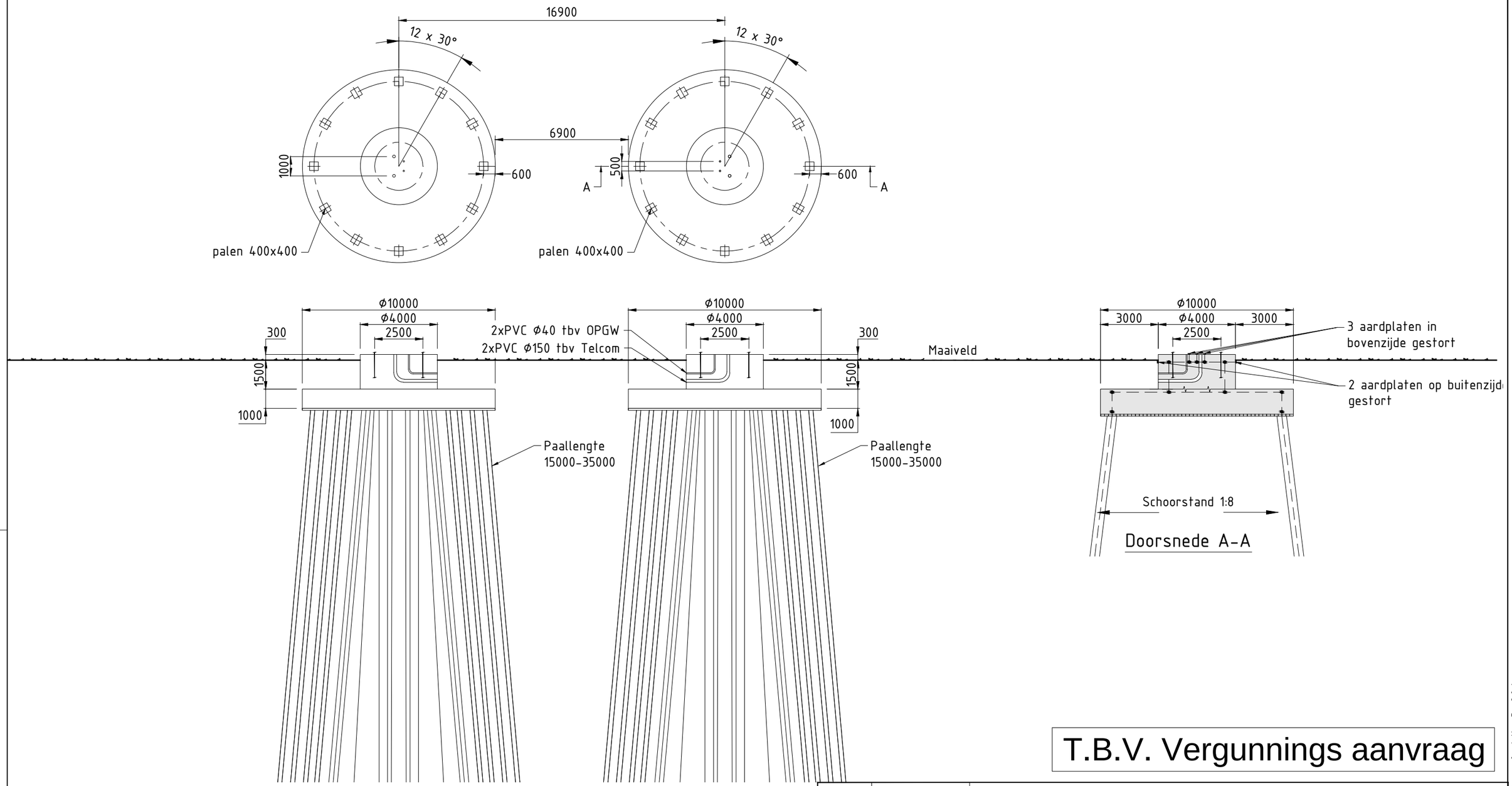

T.B.V. Vergunnings aanvraag

8.0	21-03-2014	Paal paal afstand aangepast
7.0	10-03-2014	Diverse aanpassingen
6.0	13-02-2014	Diverse aanpassingen

Verklaring

- Gewapend beton
- Werkvloer

Verklaring aarding

- Ringleiding Ø16mm (FeB220) glad
- Koppeling met aardstaaf in paal
- Aardplaten

Opmerkingen

Maten in mm
Coordinaten in mm, in het stelsel van de rijksdriehoekmeting
Maatvoering in het 360 graden stelsel
Vellingkanten niet getekend
Ringleiding in bovenkant poer op het bovennet plaatsen in de eerste laag
Mastvoetanker afmeting exclusief mastvoetflens breedte
Afmetingen indicatief

KEMA DNV

Projectname: Engineering verbinding ZW380

Third angle projection:

Drawing no.: 74102194-032-101V

Design state: Definitief		Scale:	1:200
Drawn by: RBE	21-03-2014	Units:	mm
Checked by: AJP	21-03-2014	Project no:	000.145
Approved by: AW	21-03-2014	Company:	TenneT

Description: Principe ontwerp fundatie hoekmast ZWW4S450 masten familie

Revision: 8.0

Format: A3

DNV KEMA Energy & Sustainability, Utrechtseweg 310, 6812 AR Arnhem, tel: +31 26 3 56 91 11, www.dnvkema.com

© 2014 - Filename: 74102194-032-101 - ZWW4S450 Principe ontwerp fundaties Rev8.0.dwg

ZWW4S450

Bijlage BS

Location dependent data to obtain pressures

Wind area			2	
Terrain catagory	O=onbebouwd, B=bebouwd		O	
Hoogte		h	71.2	m
Diameter voet		d voet	2.5	m
top		d top	0.5	m
gem		d gem	1.5	m
wanddikte		t	22	mm
Oppervlakte aan voet		A	171267	mm^2
Traagheidsmoment aan voet		W_x	1.05E+08	mm^3
Weerstandsmoment aan voet		I_x	1.30E+11	mm^4
		2de orde	10.0	%
Mast: Gewicht		$F_{rep;ver}$	565	kN

Ultimate limit state	**hoogte**	**F_{ver}**	**$F_{loodrecht}$**	**$F_{//}$**	$F_{Samengesteld}$		
	m	kN	kN	kN	kN		
GW / opgw	70.5	5.2	17.2	0.0	17.2	1211	kNm
150C1F1	59.3	19.2	49.1	0.0	49.1	2913	kNm
150C1F2	47.9	19.2	45.6	0.0	45.6	2184	kNm
150C1F3	36.5	19.2	41.1	0.0	41.1	1500	kNm
380C2F1	59.3	38.4	98.2	0.0	98.2	5826	kNm
380C2F2	47.9	38.4	91.2	0.0	91.2	4367	kNm
380C2F3	36.5	38.4	82.2	0.0	82.2	3001	kNm
RTG	25.2	10.4	22.9	0.0	22.9	577	kNm

Stuwdruk	$F_{hor.}$	31.9	kN
	$M_{d;wind}$	998	kNm
Totaal	$M_{d;tot}$	25455	kNm
Totaal moment incl. 2^{ue} orde effect	$M_{d;tot}$	28001	kNm

Normaalkracht;

Optredende normaalkracht

$N_{d;geleiders}$		188	kN
$N_{d;\ e.g.\ mast}$		678	kN
$N_{s;d;totaal}$		867	kN

Is buis plooigevoelig tgv normaalkracht: conform NEN-EN 50341 par. 7.4.5.4 — JA

	ρ_a	0.67	
	A_{eff}	114235	mm^2

Optredende spanning tgv normaalkracht

$N_{sd}/A_{eff} = f_{yd}/y_{m1}$ — 8 N/mm^2

Moment;

Optredende moment in de voet:

$M_{d;tot}$ — 28001 kNm

Is buis plooigevoelig tgv momentkracht: conform NEN-EN 50341 par. 7.4.5.4 — JA

	ρ_a	0.97	
	W_{eff}	1.02E+08	mm^3

Optredende spaning tgv moment:

$M_d/W_{eff} = f_{yd}/y_{m1}$ — 275 N/mm^2

Totale spanning:

	σ_d	283	N/mm^2
	$\sigma_{d;toegestaan}$	284	N/mm^2

< 284 N/mm^2 = ACCOORD

==> 80% van 355 N/mm^2

Special limit state	**hoogte**	**F_{ver}**	**$F_{loodrecht}$**	**$F_{//}$**	$F_{Samengesteld}$		
	m	kN	kN	kN	kN		
GW / opgw	70.5	4.3	11.8	0.0	11.8	829	kNm
150C1F1	59.3	16.0	33.8	0.0	33.8	2006	kNm
150C1F2	47.9	16.0	31.5	0.0	31.5	1507	kNm
150C1F3	36.5	16.0	28.5	0.0	28.5	1039	kNm
380C2F1	59.3	32.0	67.7	0.0	67.7	4013	kNm
380C2F2	47.9	32.0	62.9	0.0	62.9	3014	kNm
380C2F3	36.5	32.0	56.9	0.0	56.9	2078	kNm
RTG	25.2	8.7	15.8	0.0	15.8	399	kNm

Stuwdruk	$F_{hor.}$	850	kN		
Verplaating		1.81	m	3.88	EIS TENNET VISUEE
Percentage van de verplaatsing		2.54%		5.5%	NEN-EN-50341
Hoek		2.84	graden		
Kromming		0.63%		1%	NEN-EN-50341
Fundatie rotatiestijfheid		0.005	rad		

ZWW4S450

Loadcases for tower strength (ultimate limit state)

		Ahead			Back		
Loadcase according to 50341-3-15	Att. Point	Vertical [N]	Transversal [N]	Longitudinal [N]	Vertical [N]	Transversal [N]	Longitudinal [N]
NL1/1a	GW / opgw	2604	896	20228	2604	896	-20228
Wind, 10°C	150C1F1	9593	3280	74325	9593	3280	-74325
Permanent loads yg= 1.2	150C1F2	9593	3278	74325	9593	3278	-74325
Wind angle: 0°	150C1F3	9593	3274	74325	9593	3274	-74325
	380C2F1	19186	6561	148650	19186	6561	-148650
	380C2F2	19186	6555	148650	19186	6555	-148650
	380C2F3	19186	6548	148650	19186	6548	-148650
	RTG	5200	1780	40409	5200	1780	-40409
NL1/1b	GW / opgw	2603	980	22397	2603	980	-22397
Wind, -20°C	150C1F1	9588	3645	83312	9588	3645	-83312
Permanent loads yg= 1.2	150C1F2	9588	3644	83312	9588	3644	-83312
Wind angle: 0°	150C1F3	9588	3643	83312	9588	3643	-83312
	380C2F1	19175	7289	166624	19175	7289	-166624
	380C2F2	19175	7288	166624	19175	7288	-166624
	380C2F3	19175	7287	166624	19175	7287	-166624
	RTG	5198	1943	44440	5198	1943	-44440
NL1/3	GW / opgw	10505	2797	63760	10505	2797	-63760
Wind, -5°C	150C1F1	16533	5309	121139	16533	5309	-121139
Permanent loads yg= 1.2	150C1F2	16533	5307	121139	16533	5307	-121139
Wind angle: 0°	150C1F3	16533	5305	121139	16533	5305	-121139
	380C2F1	33067	10617	242278	33067	10617	-242278
	380C2F2	33067	10614	242278	33067	10614	-242278
	380C2F3	33067	10610	242278	33067	10610	-242278
	RTG	21038	5592	127696	21038	5592	-127696
NL1/4	GW / opgw	3356	1112	25421	3356	1112	-25421
Construction/maintenance, +5°C	150C1F1	11098	3733	85329	11098	3733	-85329
Permanent loads yg= 1.2	150C1F2	11098	3732	85329	11098	3732	-85329
Wind angle: 0°	150C1F3	11098	3731	85329	11098	3731	-85329
	380C2F1	22195	7465	170658	22195	7465	-170658
	380C2F2	22195	7464	170658	22195	7464	-170658
	380C2F3	22195	7463	170658	22195	7463	-170658
	RTG	6705	2220	50770	6705	2220	-50770
NL1/6	GW / opgw	2930	976	22355	2930	976	-22355
Permanent, +10°C	150C1F1	10793	3580	82000	10793	3580	-82000
Permanent loads yg= 1.35	150C1F2	10793	3580	82000	10793	3580	-82000
	150C1F3	10793	3580	82000	10793	3580	-82000
	380C2F1	21587	7160	164000	21587	7160	-164000
	380C2F2	21587	7160	164000	21587	7160	-164000
	380C2F3	21587	7160	164000	21587	7160	-164000
	RTG	5851	1950	44665	5851	1950	-44665
NL1/1a	GW / opgw	2605	4269	28732	2605	4959	-31359
Wind, 10°C	150C1F1	9596	12559	93910	9597	14463	-100520
Permanent loads yg= 1.2	150C1F2	9595	11774	91314	9596	13518	-97191
Wind angle: 45°	150C1F3	9595	10785	88181	9596	12325	-93130
	380C2F1	19192	25117	187821	19193	28927	-201040
	380C2F2	19191	23547	182627	19192	27036	-194381
	380C2F3	19190	21569	176363	19191	24651	-186260
	RTG	5201	5980	48486	5202	6844	-51355
NL1/1b	GW / opgw	2603	1600	22848	2603	1723	-23038
Wind, -20°C	150C1F1	9588	5368	84245	9588	5709	-84646
Permanent loads yg= 1.2	150C1F2	9588	5228	84099	9588	5540	-84439
Wind angle: 45°	150C1F3	9588	5050	83931	9588	5327	-84200
	380C2F1	19176	10737	168490	19176	11418	-169292
	380C2F2	19175	10456	168197	19176	11080	-168878
	380C2F3	19175	10101	167861	19176	10654	-168401
	RTG	5198	2728	44802	5198	2883	-44960
NL1/3	GW / opgw	10506	5965	65646	10506	6591	-66434
Wind, -5°C	150C1F1	16534	10169	124691	16535	11136	-126169
Permanent loads yg= 1.2	150C1F2	16534	9770	124146	16534	10656	-125408
Wind angle: 45°	150C1F3	16534	9267	123517	16534	10051	-124525
	380C2F1	33068	20339	249381	33069	22272	-252337
	380C2F2	33068	19541	248293	33069	21312	-250815
	380C2F3	33068	18534	247035	33068	20102	-249050
	RTG	21039	9602	129204	21039	10387	-129862
NL1/4	GW / opgw	3357	1726	25730	3357	1847	-25864
Construction/maintenance, +5°C	150C1F1	11098	5449	86062	11098	5786	-86381
Permanent loads yg= 1.2	150C1F2	11098	5309	85945	11098	5619	-86216
Wind angle: 45°	150C1F3	11098	5133	85812	11098	5407	-86026
	380C2F1	22196	10898	172123	22196	11572	-172763
	380C2F2	22195	10619	171891	22196	11237	-172432
	380C2F3	22195	10267	171624	22195	10815	-172052
	RTG	6706	3000	51014	6706	3152	-51124

NL1/1a	GW / opgw	2607	8586	45574	2607	8586	-45574
Wind, 10°C	150C1F1	9602	24562	138636	9602	24562	-138636
Permanent loads yg= 1.2	150C1F2	9601	22794	131836	9601	22794	-131836
Wind angle: 90°	150C1F3	9600	20553	123234	9600	20553	-123234
	380C2F1	19204	49124	277273	19204	49124	-277273
	380C2F2	19202	45588	263672	19202	45588	-263672
	380C2F3	19200	41105	246468	19200	41105	-246468
	RTG	5204	11453	68736	5204	11453	-68736
NL1/1b	GW / opgw	2603	2387	24492	2603	2387	-24492
Wind, -20°C	150C1F1	9588	7530	87796	9588	7530	-87796
Permanent loads yg= 1.2	150C1F2	9588	7207	87127	9588	7207	-87127
Wind angle: 90°	150C1F3	9588	6801	86348	9588	6801	-86348
	380C2F1	19177	15059	175592	19177	15059	-175592
	380C2F2	19176	14414	174253	19176	14414	-174253
	380C2F3	19176	13601	172695	19176	13601	-172695
	RTG	5198	3706	46213	5198	3706	-46213
NL1/3	GW / opgw	10509	9935	72287	10509	9935	-72287
Wind, -5°C	150C1F1	16537	16325	137190	16537	16325	-137190
Permanent loads yg= 1.2	150C1F2	16537	15405	134923	16537	15405	-134923
Wind angle: 90°	150C1F3	16536	14247	132238	16536	14247	-132238
	380C2F1	33074	32649	274379	33074	32649	-274379
	380C2F2	33073	30810	269847	33073	30810	-269847
	380C2F3	33072	28493	264476	33072	28493	-264476
	RTG	21042	14558	135029	21042	14558	-135029
NL1/4	GW / opgw	3357	2493	26912	3357	2493	-26912
Construction/maintenance, +5°C	150C1F1	11098	7581	88923	11098	7581	-88923
Permanent loads yg= 1.2	150C1F2	11098	7264	88379	11098	7264	-88379
Wind angle: 90°	150C1F3	11098	6864	87748	11098	6864	-87748
	380C2F1	22196	15162	177846	22196	15162	-177846
	380C2F2	22196	14527	176758	22196	14527	-176758
	380C2F3	22196	13727	175497	22196	13727	-175497
	RTG	6706	3960	52007	6706	3960	-52007
NL1/1a	GW / opgw	2605	4959	31359	2605	4269	-28732
Wind, 10°C	150C1F1	9597	14463	100520	9596	12559	-93910
Permanent loads yg= 1.2	150C1F2	9596	13518	97191	9595	11774	-91314
Wind angle: -45°	150C1F3	9596	12325	93130	9595	10785	-88181
	380C2F1	19193	28927	201040	19192	25117	-187821
	380C2F2	19192	27036	194381	19191	23547	-182627
	380C2F3	19191	24651	186260	19190	21569	-176363
	RTG	5202	6844	51355	5201	5980	-48486
NL1/1b	GW / opgw	2603	1723	23038	2603	1600	-22848
Wind, -20°C	150C1F1	9588	5709	84646	9588	5368	-84245
Permanent loads yg= 1.2	150C1F2	9588	5540	84439	9588	5228	-84099
Wind angle: -45°	150C1F3	9588	5327	84200	9588	5050	-83931
	380C2F1	19176	11418	169292	19176	10737	-168490
	380C2F2	19176	11080	168878	19175	10456	-168197
	380C2F3	19176	10654	168401	19175	10101	-167861
	RTG	5198	2883	44960	5198	2728	-44802
NL1/3	GW / opgw	10506	6591	66434	10506	5965	-65646
Wind, -5°C	150C1F1	16535	11136	126169	16534	10169	-124691
Permanent loads yg= 1.2	150C1F2	16534	10656	125408	16534	9770	-124146
Wind angle: -45°	150C1F3	16534	10051	124525	16534	9267	-123517
	380C2F1	33069	22272	252337	33068	20339	-249381
	380C2F2	33069	21312	250815	33068	19541	-248293
	380C2F3	33068	20102	249050	33068	18534	-247035
	RTG	21039	10387	129862	21039	9602	-129204
NL1/4	GW / opgw	3357	1847	25864	3357	1726	-25730
Construction/maintenance, +5°C	150C1F1	11098	5786	86381	11098	5449	-86062
Permanent loads yg= 1.2	150C1F2	11098	5619	86216	11098	5309	-85945
Wind angle: -45°	150C1F3	11098	5407	86026	11098	5133	-85812
	380C2F1	22196	11572	172763	22196	10898	-172123
	380C2F2	22196	11237	172432	22195	10619	-171891
	380C2F3	22195	10815	172052	22195	10267	-171624
	RTG	6706	3152	51124	6706	3000	-51014
NL1//1a	GW / opgw	1953	702	15782	1953	702	-15782
Wind, 10°C	150C1F1	7193	2578	58228	7193	2578	-58228
Permanent loads yg= 0.9	150C1F2	7193	2575	58228	7193	2575	-58228
Wind angle: 0°	150C1F3	7193	2571	58228	7193	2571	-58228
	380C2F1	14386	5155	116457	14386	5155	-116457
	380C2F2	14386	5149	116457	14386	5149	-116457
	380C2F3	14386	5142	116457	14386	5142	-116457
	RTG	3899	1392	31514	3899	1392	-31514

NL1/1b	GW / opgw	1952	775	17692	1952	775	-17692
Wind, -20°C	150C1F1	7189	2901	66272	7189	2901	-66272
Permanent loads yg= 0.9	150C1F2	7189	2900	66272	7189	2900	-66272
Wind angle: 0°	150C1F3	7189	2899	66272	7189	2899	-66272
	380C2F1	14378	5801	132544	14378	5801	-132544
	380C2F2	14378	5800	132544	14378	5800	-132544
	380C2F3	14378	5799	132544	14378	5799	-132544
	RTG	3898	1534	35052	3898	1534	-35052
NL1/3	GW / opgw	9851	2666	60762	9851	2666	-60762
Wind, -5°C	150C1F1	14131	4696	107107	14131	4696	-107107
Permanent loads yg= 0.9	150C1F2	14131	4695	107107	14131	4695	-107107
Wind angle: 0°	150C1F3	14131	4693	107108	14131	4693	-107108
	380C2F1	28263	9392	214215	28263	9392	-214215
	380C2F2	28263	9389	214215	28263	9389	-214215
	380C2F3	28263	9385	214215	28263	9385	-214215
	RTG	19733	5330	121693	19733	5330	-121693
NL1/4	GW / opgw	2705	929	21225	2705	929	-21225
Construction/maintenance, +5°C	150C1F1	8697	3051	69725	8697	3051	-69725
Permanent loads yg= 0.9	150C1F2	8697	3051	69726	8697	3051	-69726
Wind angle: 0°	150C1F3	8697	3050	69726	8697	3050	-69726
	380C2F1	17395	6103	139451	17395	6103	-139451
	380C2F2	17395	6102	139451	17395	6102	-139451
	380C2F3	17395	6100	139451	17395	6100	-139451
	RTG	5404	1853	42376	5404	1853	-42376
NL1/6	GW / opgw	1953	689	15782	1953	689	-15782
Permanent, +10°C	150C1F1	7193	2542	58229	7193	2542	-58229
Permanent loads yg= 0.9	150C1F2	7193	2542	58229	7193	2542	-58229
	150C1F3	7193	2542	58229	7193	2542	-58229
	380C2F1	14386	5085	116458	14386	5085	-116458
	380C2F2	14386	5085	116458	14386	5085	-116458
	380C2F3	14386	5085	116458	14386	5085	-116458
	RTG	3899	1376	31514	3899	1376	-31514
NL1/1a	GW / opgw	1954	4165	26361	1954	4870	-29315
Wind, 10°C	150C1F1	7196	12105	83545	7197	14061	-91332
Permanent loads yg= 0.9	150C1F2	7195	11296	80414	7196	13091	-87439
Wind angle: 45°	150C1F3	7195	10277	76571	7196	11865	-82609
	380C2F1	14392	24210	167090	14393	28122	-182664
	380C2F2	14391	22593	160828	14392	26182	-174879
	380C2F3	14390	20553	153142	14391	23730	-165218
	RTG	3900	5702	42130	3901	6592	-45606
NL1/1b	GW / opgw	1952	1403	18343	1952	1530	-18611
Wind, -20°C	150C1F1	7189	4643	67644	7189	4991	-68220
Permanent loads yg= 0.9	150C1F2	7189	4500	67432	7189	4818	-67923
Wind angle: 45°	150C1F3	7189	4319	67189	7189	4601	-67579
	380C2F1	14378	9287	135288	14378	9982	-136440
	380C2F2	14378	9000	134865	14378	9637	-135846
	380C2F3	14378	8638	134378	14378	9201	-135159
	RTG	3898	2326	35585	3898	2483	-35811
NL1/3	GW / opgw	9852	5841	62817	9853	6470	-63669
Wind, -5°C	150C1F1	14132	9591	111461	14133	10571	-113242
Permanent loads yg= 0.9	150C1F2	14132	9187	110802	14133	10084	-112326
Wind angle: 45°	150C1F3	14132	8678	110038	14132	9471	-111261
	380C2F1	28265	19182	222922	28266	21142	-226483
	380C2F2	28265	18374	221604	28265	20168	-224653
	380C2F3	28264	17355	220076	28265	18942	-222521
	RTG	19734	9345	123344	19734	10133	-124060
NL1/4	GW / opgw	2705	1547	21636	2705	1670	-21810
Construction/maintenance, +5°C	150C1F1	8697	4780	70741	8698	5121	-71176
Permanent loads yg= 0.9	150C1F2	8697	4638	70583	8697	4952	-70951
Wind angle: 45°	150C1F3	8697	4460	70400	8697	4738	-70693
	380C2F1	17395	9559	141483	17395	10243	-142351
	380C2F2	17395	9277	141165	17395	9904	-141903
	380C2F3	17395	8920	140801	17395	9475	-141386
	RTG	5404	2637	42706	5404	2791	-42850
NL1/1a	GW / opgw	1955	8538	44486	1955	8538	-44486
Wind, 10°C	150C1F1	7201	24331	133376	7201	24331	-133376
Permanent loads yg= 0.9	150C1F2	7200	22542	126099	7200	22542	-126099
Wind angle: 90°	150C1F3	7199	20270	116788	7199	20270	-116788
	380C2F1	14402	48661	266751	14402	48661	-266751
	380C2F2	14400	45084	252197	14400	45084	-252197
	380C2F3	14398	40540	233576	14398	40540	-233576
	RTG	3903	11300	65229	3903	11300	-65229

NL1/1b	GW / opgw	1952	2216	20584	1952	2216	-20584
Wind, -20°C	150C1F1	7190	6866	72622	7190	6866	-72622
Permanent loads yg= 0.9	150C1F2	7190	6533	71703	7190	6533	-71703
Wind angle: 90°	150C1F3	7189	6113	70622	7189	6113	-70622
	380C2F1	14379	13733	145245	14379	13733	-145245
	380C2F2	14379	13066	143405	14379	13066	-143405
	380C2F3	14379	12227	141244	14379	12227	-141244
	RTG	3898	3329	37573	3898	3329	-37573
NL1/3	GW / opgw	9855	9831	69930	9855	9831	-69930
Wind, -5°C	150C1F1	14135	15843	126185	14135	15843	-126185
Permanent loads yg= 0.9	150C1F2	14135	14908	123565	14135	14908	-123565
Wind angle: 90°	150C1F3	14134	13730	120434	14134	13730	-120434
	380C2F1	28271	31685	252371	28271	31685	-252371
	380C2F2	28270	29815	247129	28270	29815	-247129
	380C2F3	28268	27460	240868	28268	27460	-240868
	RTG	19737	14322	129644	19737	14322	-129644
NL1/4	GW / opgw	2705	2329	23151	2705	2329	-23151
Construction/maintenance, +5°C	150C1F1	8698	6953	74563	8698	6953	-74563
Permanent loads yg= 0.9	150C1F2	8698	6629	73847	8698	6629	-73847
Wind angle: 90°	150C1F3	8698	6220	73010	8698	6220	-73010
	380C2F1	17396	13907	149127	17396	13907	-149127
	380C2F2	17396	13257	147693	17396	13257	-147693
	380C2F3	17396	12439	146020	17396	12439	-146020
	RTG	5404	3610	44000	5404	3610	-44000
NL1/1a	GW / opgw	1954	4870	29315	1954	4165	-26361
Wind, 10°C	150C1F1	7197	14061	91332	7196	12105	-83545
Permanent loads yg= 0.9	150C1F2	7196	13091	87439	7195	11296	-80414
Wind angle: -45°	150C1F3	7196	11865	82609	7195	10277	-76571
	380C2F1	14393	28122	182664	14392	24210	-167090
	380C2F2	14392	26182	174879	14391	22593	-160828
	380C2F3	14391	23730	165218	14390	20553	-153142
	RTG	3901	6592	45606	3900	5702	-42130
NL1/1b	GW / opgw	1952	1530	18611	1952	1403	-18343
Wind, -20°C	150C1F1	7189	4991	68220	7189	4643	-67644
Permanent loads yg= 0.9	150C1F2	7189	4818	67923	7189	4500	-67432
Wind angle: -45°	150C1F3	7189	4601	67579	7189	4319	-67189
	380C2F1	14378	9982	136440	14378	9287	-135288
	380C2F2	14378	9637	135846	14378	9000	-134865
	380C2F3	14378	9201	135159	14378	8638	-134378
	RTG	3898	2483	35811	3898	2326	-35585
NL1/3	GW / opgw	9853	6470	63669	9852	5841	-62817
Wind, -5°C	150C1F1	14133	10571	113242	14132	9591	-111461
Permanent loads yg= 0.9	150C1F2	14133	10084	112326	14132	9187	-110802
Wind angle: -45°	150C1F3	14132	9471	111261	14132	8678	-110038
	380C2F1	28266	21142	226483	28265	19182	-222922
	380C2F2	28265	20168	224653	28265	18374	-221604
	380C2F3	28265	18942	222521	28264	17355	-220076
	RTG	19734	10133	124060	19734	9345	-123344
NL1/4	GW / opgw	2705	1670	21810	2705	1547	-21636
Construction/maintenance, +5°C	150C1F1	8698	5121	71176	8697	4780	-70741
Permanent loads yg= 0.9	150C1F2	8697	4952	70951	8697	4638	-70583
Wind angle: -45°	150C1F3	8697	4738	70693	8697	4460	-70400
	380C2F1	17395	10243	142351	17395	9559	-141483
	380C2F2	17395	9904	141903	17395	9277	-141165
	380C2F3	17395	9475	141386	17395	8920	-140801
	RTG	5404	2791	42850	5404	2637	-42706

ZWW4S450

Loadcases for tower strength (serviceability limit state)

		Ahead			Back		
Loadcase according to 50341-3-15	Att. Point	Vertical [N]	Transversal [N]	Longitudinal [N]	Vertical [N]	Transversal [N]	Longitudinal [N]
NL4/1a	GW / opgw	2170	764	17295	2170	764	-17295
Wind, 10°C	150C1F1	7993	2805	63716	7993	2805	-63716
Permanent loads yg= 1.0	150C1F2	7993	2804	63716	7993	2804	-63716
Wind angle: 0°	150C1F3	7993	2801	63716	7993	2801	-63716
	380C2F1	15986	5611	127432	15986	5611	-127432
	380C2F2	15986	5607	127432	15986	5607	-127432
	380C2F3	15986	5602	127432	15986	5602	-127432
	RTG	4333	1519	34541	4333	1519	-34541
NL4/1b	GW / opgw	2169	844	19300	2169	844	-19300
Wind, -20°C	150C1F1	7988	3153	72109	7988	3153	-72109
Permanent loads yg= 1.0	150C1F2	7988	3153	72109	7988	3153	-72109
Wind angle: 0°	150C1F3	7988	3152	72109	7988	3152	-72109
	380C2F1	15977	6306	144218	15977	6306	-144218
	380C2F2	15977	6305	144218	15977	6305	-144218
	380C2F3	15977	6304	144218	15977	6304	-144218
	RTG	4331	1673	38260	4331	1673	-38260
NL4/3	GW / opgw	7433	2151	49070	7433	2151	-49070
Wind, -5°C	150C1F1	12617	4288	97907	12617	4288	-97907
Permanent loads yg= 1.0	150C1F2	12617	4287	97907	12617	4287	-97907
Wind angle: 0°	150C1F3	12617	4285	97907	12617	4285	-97907
	380C2F1	25235	8576	195813	25235	8576	-195813
	380C2F2	25235	8574	195813	25235	8574	-195813
	380C2F3	25235	8571	195813	25235	8571	-195813
	RTG	14883	4298	98194	14883	4298	-98194
NL4/4	GW / opgw	2671	919	21002	2671	919	-21002
Construction/maintenance, +5°C	150C1F1	8996	3136	71719	8996	3136	-71719
Permanent loads yg= 1.0	150C1F2	8996	3136	71719	8996	3136	-71719
Wind angle: 0°	150C1F3	8996	3135	71719	8996	3135	-71719
	380C2F1	17991	6272	143437	17991	6272	-143437
	380C2F2	17991	6271	143437	17991	6271	-143437
	380C2F3	17991	6270	143438	17991	6270	-143438
	RTG	5336	1833	41924	5336	1833	-41924
NL4/1a	GW / opgw	2170	2988	22435	2170	3447	-24152
Wind, 10°C	150C1F1	7994	8924	75285	7995	10183	-79448
Permanent loads yg= 1.0	150C1F2	7994	8407	73680	7995	9558	-77337
Wind angle: 45°	150C1F3	7994	7755	71769	7994	8771	-74800
	380C2F1	15989	17849	150569	15990	20366	-158895
	380C2F2	15988	16813	147359	15989	19116	-154675
	380C2F3	15988	15511	143537	15989	17541	-149601
	RTG	4334	4288	39227	4334	4856	-40984
NL4/1b	GW / opgw	2169	1255	19552	2169	1336	-19659
Wind, -20°C	150C1F1	7988	4298	72628	7989	4523	-72853
Permanent loads yg= 1.0	150C1F2	7988	4205	72545	7988	4411	-72737
Wind angle: 45°	150C1F3	7988	4087	72451	7988	4270	-72602
	380C2F1	15977	8595	145255	15977	9045	-145707
	380C2F2	15977	8409	145091	15977	8822	-145473
	380C2F3	15977	8174	144902	15977	8540	-145205
	RTG	4331	2194	38460	4331	2296	-38548
NL4/3	GW / opgw	7433	4265	50395	7433	4683	-50950
Wind, -5°C	150C1F1	12618	7522	100149	12618	8164	-101091
Permanent loads yg= 1.0	150C1F2	12618	7257	99803	12618	7845	-100605
Wind angle: 45°	150C1F3	12618	6922	99404	12618	7443	-100043
	380C2F1	25236	15043	200297	25236	16328	-202182
	380C2F2	25236	14513	199606	25236	15690	-201211
	380C2F3	25235	13844	198808	25236	14886	-200087
	RTG	14884	6972	99252	14884	7496	-99715
NL4/4	GW / opgw	2671	1327	21183	2671	1407	-21262
Construction/maintenance, +5°C	150C1F1	8996	4277	72137	8996	4500	-72322
Permanent loads yg= 1.0	150C1F2	8996	4184	72070	8996	4389	-72226
Wind angle: 45°	150C1F3	8996	4068	71993	8996	4249	-72117
	380C2F1	17991	8554	144274	17991	9000	-144644
	380C2F2	17991	8369	144140	17991	8779	-144453
	380C2F3	17991	8135	143987	17991	8499	-144233
	RTG	5336	2352	42066	5336	2453	-42131
NL4/1a	GW / opgw	2171	5879	33985	2171	5879	-33985
Wind, 10°C	150C1F1	7998	16918	105001	7998	16918	-105001
Permanent loads yg= 1.0	150C1F2	7997	15732	100296	7997	15732	-100296
Wind angle: 90°	150C1F3	7997	14233	94421	7997	14233	-94421
	380C2F1	15995	33835	210002	15995	33835	-210002
	380C2F2	15994	31465	200593	15994	31465	-200593
	380C2F3	15993	28466	188843	15993	28466	-188843
	RTG	4335	7917	52307	4335	7917	-52307

NL4/1b	GW / opgw	2169	1773	20499	2169	1773	-20499
Wind, -20°C	150C1F1	7989	5723	74654	7989	5723	-74654
Permanent loads yg= 1.0	150C1F2	7989	5511	74268	7989	5511	-74268
Wind angle: 90°	150C1F3	7989	5243	73821	7989	5243	-73821
	380C2F1	15977	11447	149307	15977	11447	-149307
	380C2F2	15977	11022	148535	15977	11022	-148535
	380C2F3	15977	10486	147641	15977	10486	-147641
	RTG	4331	2840	39256	4331	2840	-39256
NL4/3	GW / opgw	7435	6922	55110	7435	6922	-55110
Wind, -5°C	150C1F1	12619	11613	108250	12619	11613	-108250
Permanent loads yg= 1.0	150C1F2	12619	11001	106761	12619	11001	-106761
Wind angle: 90°	150C1F3	12619	10231	105007	12619	10231	-105007
	380C2F1	25239	23227	216500	25239	23227	-216500
	380C2F2	25238	22003	213521	25238	22003	-213521
	380C2F3	25237	20462	210013	25237	20462	-210013
	RTG	14885	10283	103355	14885	10283	-103355
NL4/4	GW / opgw	2671	1834	21891	2671	1834	-21891
Construction/maintenance, +5°C	150C1F1	8996	5688	73807	8996	5688	-73807
Permanent loads yg= 1.0	150C1F2	8996	5478	73487	8996	5478	-73487
Wind angle: 90°	150C1F3	8996	5214	73117	8996	5214	-73117
	380C2F1	17992	11375	147613	17992	11375	-147613
	380C2F2	17992	10956	146974	17992	10956	-146974
	380C2F3	17992	10427	146235	17992	10427	-146235
	RTG	5336	2988	42654	5336	2988	-42654
NL4/1a	GW / opgw	2170	3447	24152	2170	2988	-22435
Wind, 10°C	150C1F1	7995	10183	79448	7994	8924	-75285
Permanent loads yg= 1.0	150C1F2	7995	9558	77337	7994	8407	-73680
Wind angle: -45°	150C1F3	7994	8771	74800	7994	7755	-71769
	380C2F1	15990	20366	158895	15989	17849	-150569
	380C2F2	15989	19116	154675	15988	16813	-147359
	380C2F3	15989	17541	149601	15988	15511	-143537
	RTG	4334	4856	40984	4334	4288	-39227
NL4/1b	GW / opgw	2169	1336	19659	2169	1255	-19552
Wind, -20°C	150C1F1	7989	4523	72853	7988	4298	-72628
Permanent loads yg= 1.0	150C1F2	7988	4411	72737	7988	4205	-72545
Wind angle: -45°	150C1F3	7988	4270	72602	7988	4087	-72451
	380C2F1	15977	9045	145707	15977	8595	-145255
	380C2F2	15977	8822	145473	15977	8409	-145091
	380C2F3	15977	8540	145205	15977	8174	-144902
	RTG	4331	2296	38548	4331	2194	-38460
NL4/3	GW / opgw	7433	4683	50950	7433	4265	-50395
Wind, -5°C	150C1F1	12618	8164	101091	12618	7522	-100149
Permanent loads yg= 1.0	150C1F2	12618	7845	100605	12618	7257	-99803
Wind angle: -45°	150C1F3	12618	7443	100043	12618	6922	-99404
	380C2F1	25236	16328	202182	25236	15043	-200297
	380C2F2	25236	15690	201211	25236	14513	-199606
	380C2F3	25236	14886	200087	25235	13844	-198808
	RTG	14884	7496	99715	14884	6972	-99252
NL4/4	GW / opgw	2671	1407	21262	2671	1327	-21183
Construction/maintenance, +5°C	150C1F1	8996	4500	72322	8996	4277	-72137
Permanent loads yg= 1.0	150C1F2	8996	4389	72226	8996	4184	-72070
Wind angle: -45°	150C1F3	8996	4249	72117	8996	4068	-71993
	380C2F1	17991	9000	144644	17991	8554	-144274
	380C2F2	17991	8779	144453	17991	8369	-144140
	380C2F3	17991	8499	144233	17991	8135	-143987
	RTG	5336	2453	42131	5336	2352	-42066

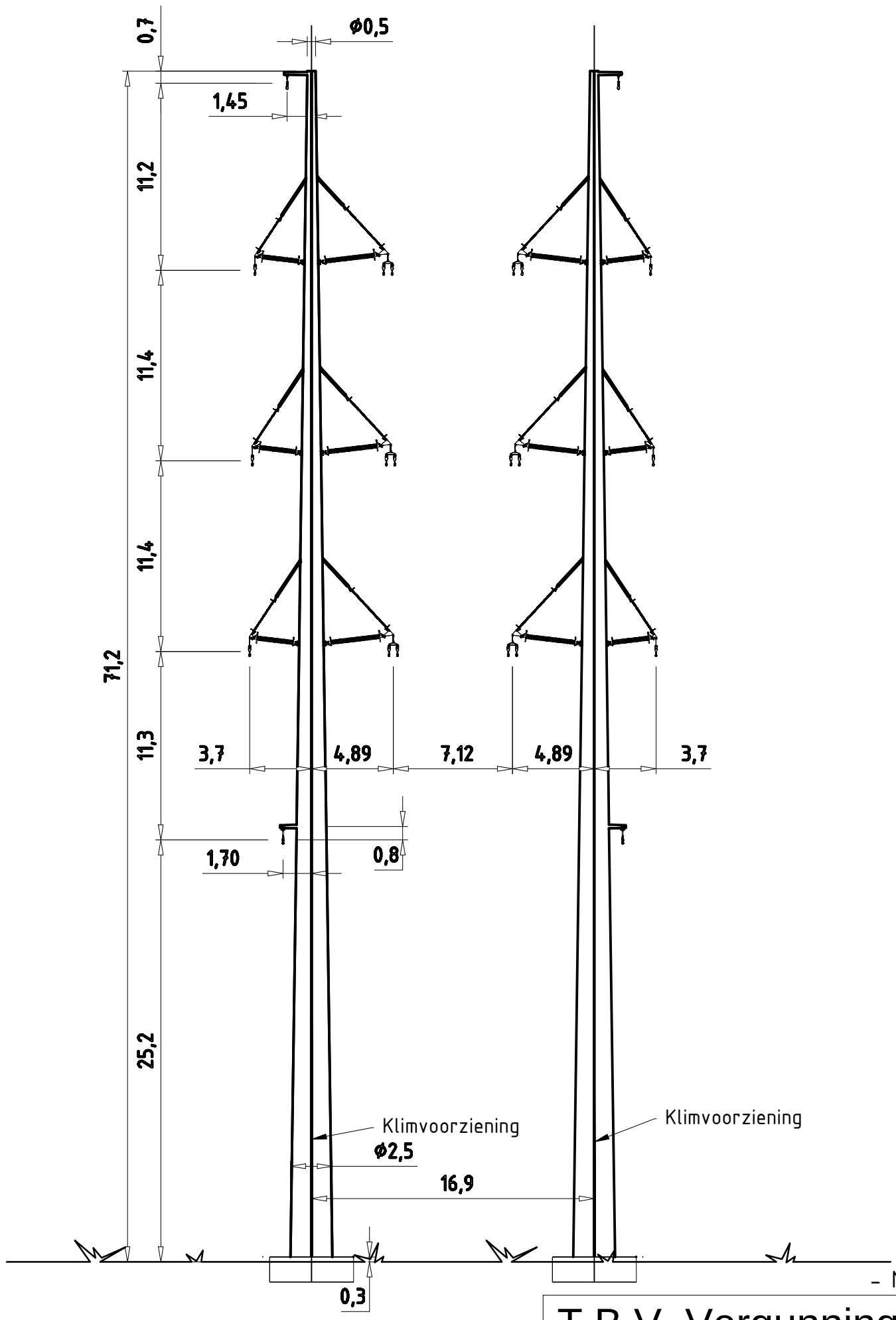

– Maatvoering indicatief

T.B.V. Vergunnings aanvraag

Wintrack
Masttype: ZWW4S450

- Trekparameter 1800m
- 2x380 / 2x150 Steunmast
- 450m Veldlengte
- 175°-180° Lijnhoek
- Uitvoering Staal of Beton
- Kleurstelling hoofdelement:
  Ral 9018 Papyrus white
- Kleurstelling Appendages:
  Ral 7021 Black grey

4.0	03-03-2014	Increased space between poles
3.0	11-02-2014	Modified top/botom diameter and added new braced-V
2.0	11-03-2013	Small modification

KEMA DNV

Projectname: Engineering verbinding ZW380

Third angle projection:

Drawing no.: 74102194-035-101V

Design state: Definitief		Scale: 1:300	
Drawn by: RBE	03-03-2014	Units: m	
Checked by: AJP	03-03-2014	Project no: 000.145	
Approved by: AW	03-03-2014	Company: TenneT	

Description: Wintrack Masttype ZWW4S450

Revision: 4.0

Format: A3

DNV KEMA Energy & Sustainability, Utrechtseweg 310, 6812 AR Arnhem, tel: +31 26 3 56 91 11, www.dnvkema.com

© 2014 - Filename: 74102194-035-101 - ZWW4S450 Rev4.0.dwg

ZWW4S450+5

Fundatie berekening

Bijlage CT

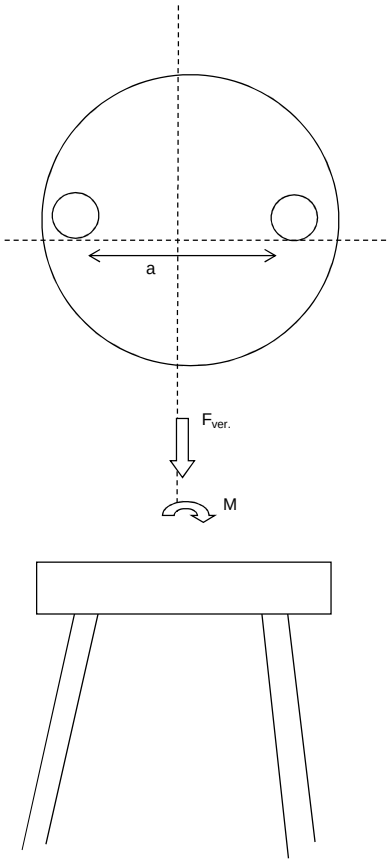

Fundatie ontwerp:
Heipaal

Afmetingen	b	400	mm
	d	400	mm
omtrek paal	$O_{p;gem}$	1.6	m
schoorstand		8	:1
α		7.125	graden
Opstort	Diameter	4.1	m
	Hoogte	1.8	m
	Inhoud	23.8	m^3
	e.g.	570	kN
Onderplaat	Diameter	10.0	m
	Hoogte	1.0	m
	Inhoud	79	m^3
	e.g.	1885	kN
Hart paal tov rand fund.		0.6	m

Optreden krachten

e.g. mast	682	kN
Fgeleiders	195	kN
Maximale dwarskracht	600	kN
Fmax vert (druk)	1013	kN
Fmin vert (trek)	760	kN
Maximale moment	31657	kNm

Moment

F_{diag}	3818	kN	
F_{hor}	600	kN	
F_{ver}	3788	kN	
Mhor (tgv Fhor)	1680	kNm	
M_{tot}	33337	kNm	reductie door opwaarste kracht water
F=M/a	3788	kN	

Verticaal reactiekracht

Fwater (trek)	1023	kN	
Fgrond (druk)	1764	kN	
Fgrond (trek)	1470	kN	
Fdmax (druk)	3038	kN	
Ftmax (trek)	1532	kN	
Fdtot (druk)	6826	kN	
Fttot (trek)	2256	kN	
Palen druk	7	(-)	
Palen trek	7	(-)	
Totaal palen	14	(-)	Per fundering

ZWW4S450+5

TREKPALEN volgens CUR 2001-4 par. 8.

$$F_{r;trek;d} = \int_0^L O_{p;gem} \times p_{r;z;d} \times dz$$

Bijlage CT

Bepaling opneembare paalbelasting op druk

heipaal			
Afmeting paal	b	0.40	m
	b	0.40	m
omtrek paal	$O_{p;gem}$	1.60	m
paalfactor	α t	0.007	
aantal palen	M	1	
aantal sonderingen	N	1	
factor invloed aantal sonderingen	ξ	0.75	
conusweerstand over wrijvingstraject	$q_{c;z;max}$	15	MPa
	$q_{c;z;rep}$	11.25	MPa
materiaalfactor	$\gamma_{m;b4}$	1.4	
factor, wisselende belastingen	$\gamma_{m;var;qc}$	1.5	
	$q_{c;z;d}$	5.36	MPa
	$p_{r;z;d}$	37.5	kN/m²
	$F_{r;trek;d;i}$	60.0	kN/m⊥
	$F_{trek,d}$	596	kN/m

Bepaling opneembare trekbelasting paal

sondering	diepte		$q_{c;z}$		$P_{r;max;schacht;i}$	$F_{r;trek;d;i}$	$F_{trek,d}$
	m	m	MPa	α t	kPa	kN	kN
	0	-1	0	0.007	0.00	0.00	0
	-1	-2	0	0.007	0.00	0.00	0
	-2	-3	0	0.007	0.00	0.00	0
	-3	-4	0	0.007	0.00	0.00	0
	-4	-5	0	0.007	0.00	0.00	0
	-5	-6	0	0.007	0.00	0.00	0
	-6	-7	0	0.007	0.00	0.00	0
	-7	-8	0	0.007	0.00	0.00	0
	-8	-9	1	0.007	2.50	4.00	4
	-9	-10	3	0.007	7.50	12.00	16
	-10	-11	2	0.007	5.00	8.00	24
	-11	-12	0	0.007	0.00	0.00	24
	-12	-13	3	0.007	7.50	12.00	36
	-13	-14	2	0.007	5.00	8.00	44
	-14	-15	4	0.007	10.00	16.00	60
	-15	-16	10	0.007	25.00	40.00	100
	-16	-17	9	0.007	22.50	36.00	136
	-17	-18	8	0.007	20.00	32.00	168
	-18	-19	12	0.007	30.00	48.00	216
	-19	-20	12	0.007	30.00	48.00	264
	-20	-21	10	0.007	25.00	40.00	304
	-21	-22	11	0.007	27.50	44.00	348
	-22	-23	11	0.007	27.50	44.00	392
	-23	-24	12	0.007	30.00	48.00	440
	-24	-25	12	0.007	30.00	48.00	488
	-25	-26	12	0.007	30.00	48.00	536
	-26	-27	15	0.007	37.50	60.00	596

$F_{trek,d}$	596	kN	paalafmeting	400	mm, paalpuntnivo	-27.00	m

Paalgroep factor	10%	
$F_{trek,d}$	**536.4**	kN

ZWW4S450+5

DRUKPALEN

FUNDERINGSCONSTRUCTIE
Toelaatbare paalbelastingen

Bijlage CT

Bepaling opneembare paalbelasting op druk

heipaal			v		
		diameter	a	2	mm
				2	mm
		Deq		0.001808	

maximale puntweerstand

$P_{r;max;punt;i}$		11.25	MN/m²
paalklasse factor	α_p	1.00	
factor paalvoet	β	1	
hoek van inwendige vrijwing van paalvoet	ϕ	40	
factor dwarsdoorsnede paalvoet	s	1.00	
minimale waarde neergaande deel	$q_{c;II;gem}$	9.00	MN/m²
gem. sondeerwaarde neergaande deel	$q_{c;I;gem}$	14.00	MN/m₂
gem. sondeerwaarde opgaande deel	$q_{c;III;gem}$	11.00	MN/m²

maximale paalschachtwrijving

$P_{r;max;schacht;i}$		0.05	MN/m²
waarin:			
paalfactor	α_s	0.010	
conusweerstand over wrijvingstraject	$q_{c;z;a}$	5.00	MN/m²

maximale draagkracht alleenstaande paal

$\mathbf{F_{r;max;i}}$		0.00	MN
waarin:			
$\mathbf{F_{r;max;punt;i}}$		0.00	MN
paalpunt oppervlak	A_{punt}	0.00	m²
$\mathbf{F_{r;max;schacht;i}}$		0.00	MN
gemiddelde paalomtrek	$O_{p;gem}$	0.01	m
lengte schachtwrijving	Δl	15.00	m

Bepaling rekenwaarde van de maximale draagkracht

$F_{r;paal;max;d}$	MN	0.00	MN
materiaalfactor grond	$\gamma_{m;b}$	1.20	
waarde afhankelijk van aantal palen en aantal sonderingen	$\xi_{1;N}$	0.75	

$F_{r;paal;max;d}$	3 kN	mm, paalpuntnivo	-27.00	m

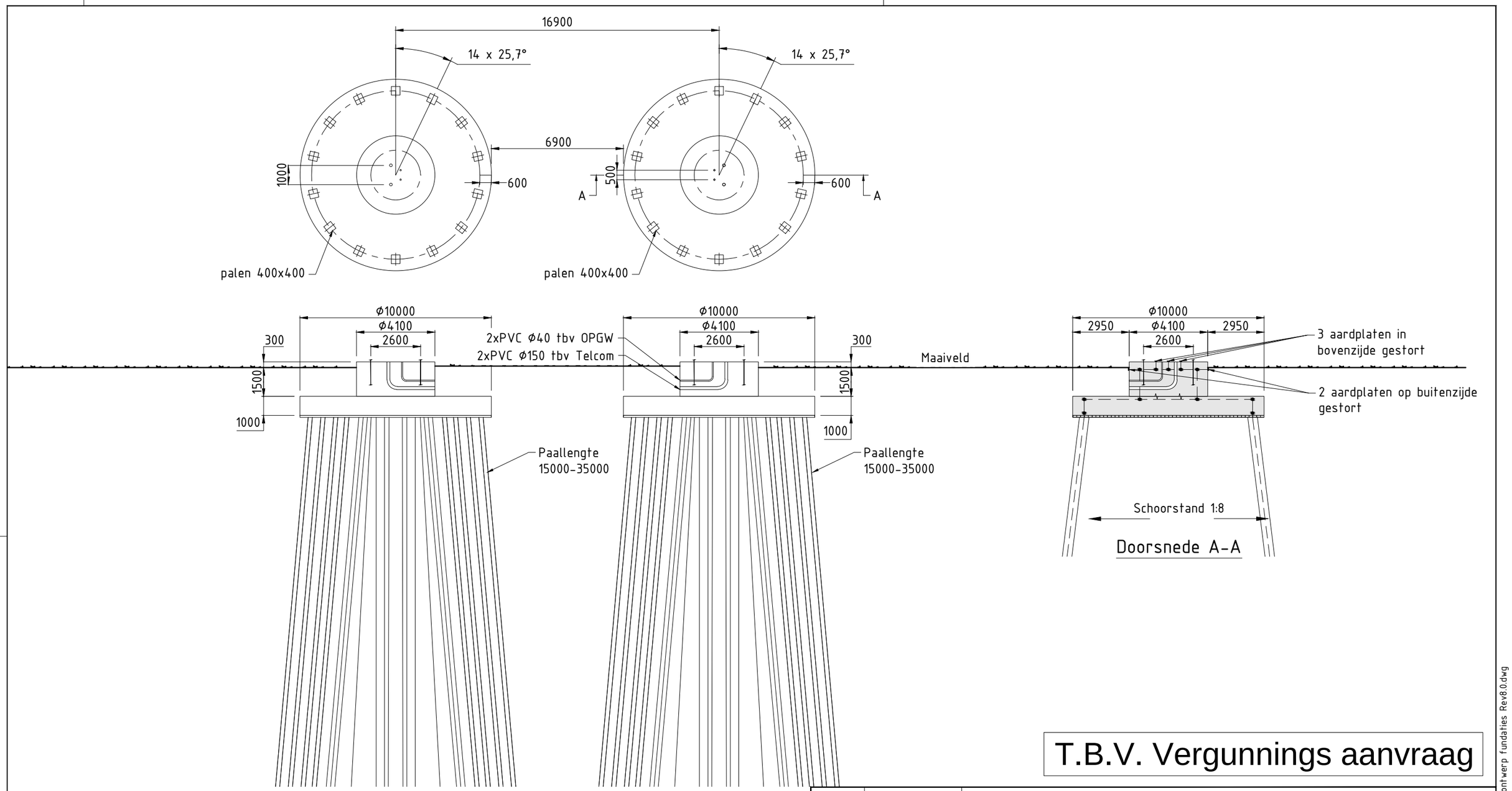

T.B.V. Vergunnings aanvraag

8.0	21-03-2014	Paal paal afstand aangepast
7.0	17-03-2014	Diverse aanpassingen
6.0	13-02-2014	Diverse aanpassingen

Verklaring

Gewapend beton
Werkvloer

Verklaring aarding

Ringleiding Ø16mm (FeB220) glad
Koppeling met aardstaaf in paal
Aardplaten

Opmerkingen

Maten in mm
Coordinaten in mm, in het stelsel van de rijksdriehoekmeting
Maatvoering in het 360 graden stelsel
Vellingkanten niet getekend
Ringleiding in bovenkant poer op het bovennet plaatsen in de eerste laag
Mastvoetanker afmeting exclusief mastvoetflens breedte
Afmetingen indicatief

Projectname:
Engineering verbinding ZW380

Third angle projection:

Drawing no.:
74102194-032-102V

Design state: Definitief		Scale: 1:200	
Drawn by: RBE	21-03-2014	Units: mm	
Checked by: AJP	21-03-2014	Project no: 000.145	
Approved by: AW	21-03-2014	Company: TenneT	

Description:
Principe ontwerp fundatie hoekmast ZWW4S450+5 masten familie

Revision: 8.0

Format: A3

DNV KEMA Energy & Sustainability, Utrechtseweg 310, 6812 AR Arnhem, tel: +31 26 3 56 91 11, www.dnvkema.com

© 2014 - Filename: 74102194-032-102 - ZWW4S450+5 Principe ontwerp fundaties Rev8.0.dwg

ZWW4S450+5

Bijlage BT

Location dependent data to obtain pressures

Wind area			2	
Terrain catagory	O=onbebouwd, B=bebouwd		O	
Hoogte		h	76.2	m
Diameter voet		d voet	2.6	m
top		d top	0.5	m
gem		d gem	1.6	m
wanddikte		t	24	mm
Oppervlakte aan voet		A	194226	mm^2
Traagheidsmoment aan voet		W_x	1.24E+08	mm^3
Weerstandsmoment aan voet		I_x	1.59E+11	mm^4
		2de orde	10.0	%
Mast: Gewicht		$F_{rep;ver}$	682	kN

Ultimate limit state	**hoogte**	**F_{ver}**	**$F_{loodrecht}$**	**$F_{//}$**	$F_{Samengesteld}$		
	m	kN	kN	kN	kN		
GW / opgw	75.5	5.4	17.3	0.0	17.3	1308	kNm
150C1F1	64.3	19.9	49.7	0.0	49.7	3194	kNm
150C1F2	52.9	19.9	46.4	0.0	46.4	2453	kNm
150C1F3	41.5	20.0	42.2	0.0	42.2	1749	kNm
380C2F1	64.3	39.7	99.4	0.0	99.4	6389	kNm
380C2F2	52.9	39.8	92.7	0.0	92.7	4905	kNm
380C2F3	41.5	39.9	84.3	0.0	84.3	3499	kNm
RTG	30.2	10.2	17.4	2.2	17.5	529	kNm

Stuwdruk	$F_{hor.}$	35.9	kN
	$M_{d;wind}$	1200	kNm
Totaal	$M_{d;tot}$	28779	kNm
Totaal moment incl. 2^{ue} orde effect	$M_{d;tot}$	31657	kNm

Normaalkracht;

Optredende normaalkracht

$N_{d;geleiders}$		195	kN
$N_{d;\ e.g.\ mast}$		818	kN
$N_{s;d;totaal}$		1013	kN

Is buis plooigevoelig tgv normaalkracht: conform NEN-EN 50341 par. 7.4.5.4 — JA

	ρ_a	0.68	
	A_{eff}	133037	mm^2

Optredende spanning tgv normaalkracht

$N_{sd}/A_{eff} = f_{yd}/y_{m1}$ — 8 N/mm^2

Moment;

Optredende moment in de voet:

$M_{d;tot}$ — 31657 kNm

Is buis plooigevoelig tgv momentkracht: conform NEN-EN 50341 par. 7.4.5.4 — JA

	ρ_a	0.98	
	W_{eff}	1.22E+08	mm^3

Optredende spaning tgv moment:

$M_d/W_{eff} = f_{yd}/y_{m1}$ — 259 N/mm^2

Totale spanning:	σ_d	267	N/mm^2	< 284 N/mm^2 = ACCOORD
	$\sigma_{d;toegestaan}$	284	N/mm^2	==> 80% van 355 N/mm^2

Special limit state	**hoogte**	**F_{ver}**	**$F_{loodrecht}$**	**$F_{//}$**	$F_{Samengesteld}$		
	m	kN	kN	kN	kN		
GW / opgw	75.5	4.5	11.9	0.0	11.9	896	kNm
150C1F1	64.3	16.7	34.2	0.0	34.2	2200	kNm
150C1F2	52.9	16.7	32.0	0.0	32.0	1693	kNm
150C1F3	41.5	16.8	29.2	0.0	29.2	1211	kNm
380C2F1	64.3	33.4	68.4	0.0	68.4	4401	kNm
380C2F2	52.9	33.5	64.0	0.0	64.0	3385	kNm
380C2F3	41.5	33.6	58.4	0.0	58.4	2422	kNm
RTG	30.2	8.5	11.6	1.5	11.7	353	kNm

Stuwdruk	$F_{hor.}$	956	kN		
Verplaating		1.97	m	4.15	EIS TENNET VISUEE
Percentage van de verplaatsing		2.59%		5.5%	NEN-EN-50341
Hoek		2.95	graden		
Kromming		0.67%		1%	NEN-EN-50341
Fundatie rotatiestijfheid		0.005	rad		

ZWW4S450+5

Loadcases for tower strength (ultimate limit state)

		Ahead			Back		
Loadcase according to 50341-3-15	Att. Point	Vertical [N]	Transversal [N]	Longitudinal [N]	Vertical [N]	Transversal [N]	Longitudinal [N]
NL1/1a	GW / opgw	2830	895	20204	2830	895	-20204
Wind, 10°C	150C1F1	10424	3277	74229	10424	3277	-74229
Permanent loads yg= 1.2	150C1F2	10424	3274	74229	10424	3274	-74229
Wind angle: 0°	150C1F3	10424	3271	74229	10424	3271	-74229
	380C2F1	20848	6553	148458	20848	6553	-148458
	380C2F2	20848	6548	148458	20848	6548	-148458
	380C2F3	20848	6541	148459	20848	6541	-148459
	RTG	4749	0	40400	5200	0	-40400
NL1/1b	GW / opgw	2854	984	22481	2854	984	-22481
Wind, -20°C	150C1F1	10522	3660	83655	10522	3660	-83655
Permanent loads yg= 1.2	150C1F2	10522	3659	83655	10522	3659	-83655
Wind angle: 0°	150C1F3	10522	3658	83656	10522	3658	-83656
	380C2F1	21045	7319	167311	21045	7319	-167311
	380C2F2	21045	7318	167311	21045	7318	-167311
	380C2F3	21045	7317	167311	21045	7317	-167311
	RTG	4700	0	44634	5198	0	-44634
NL1/3	GW / opgw	11215	2773	63210	11215	2773	-63210
Wind, -5°C	150C1F1	17886	5291	120734	17886	5291	-120734
Permanent loads yg= 1.2	150C1F2	17886	5290	120734	17886	5290	-120734
Wind angle: 0°	150C1F3	17886	5288	120734	17886	5288	-120734
	380C2F1	35772	10583	241468	35772	10583	-241468
	380C2F2	35772	10580	241468	35772	10580	-241468
	380C2F3	35772	10576	241468	35772	10576	-241468
	RTG	19620	0	126712	21040	0	-126712
NL1/4	GW / opgw	3640	1110	25364	3640	1110	-25364
Construction/maintenance, +5°C	150C1F1	12051	3727	85194	12051	3727	-85194
Permanent loads yg= 1.2	150C1F2	12051	3726	85194	12051	3726	-85194
Wind angle: 0°	150C1F3	12051	3726	85194	12051	3726	-85194
	380C2F1	24102	7454	170387	24102	7454	-170387
	380C2F2	24102	7453	170387	24102	7453	-170387
	380C2F3	24102	7451	170387	24102	7451	-170387
	RTG	6139	0	50704	6706	0	-50704
NL1/6	GW / opgw	3179	974	22311	3179	974	-22311
Permanent, +10°C	150C1F1	11709	3573	81827	11709	3573	-81827
Permanent loads yg= 1.35	150C1F2	11709	3573	81827	11709	3573	-81827
	150C1F3	11709	3573	81827	11709	3573	-81827
	380C2F1	23419	7145	163654	23419	7145	-163654
	380C2F2	23419	7145	163654	23419	7145	-163654
	380C2F3	23419	7145	163654	23419	7145	-163654
	RTG	5353	0	44620	5851	0	-44620
NL1/1a	GW / opgw	2742	4304	28767	2726	5001	-31397
Wind, 10°C	150C1F1	10184	12686	94072	10129	14616	-100732
Permanent loads yg= 1.2	150C1F2	10207	11948	91639	10154	13728	-97620
Wind angle: 45°	150C1F3	10237	11017	88686	10187	12606	-93803
	380C2F1	20369	25372	188144	20258	29232	-201464
	380C2F2	20414	23897	183278	20307	27456	-195240
	380C2F3	20474	22035	177371	20374	25212	-187607
	RTG	4874	4457	50884	5202	4228	-49979
NL1/1b	GW / opgw	2846	1610	22937	2843	1735	-23129
Wind, -20°C	150C1F1	10505	5408	84605	10498	5753	-85013
Permanent loads yg= 1.2	150C1F2	10507	5276	84467	10501	5595	-84817
Wind angle: 45°	150C1F3	10510	5109	84306	10505	5394	-84589
	380C2F1	21010	10816	169210	20995	11507	-170026
	380C2F2	21015	10552	168933	21002	11189	-169634
	380C2F3	21020	10218	168612	21010	10788	-169179
	RTG	4709	891	45157	5198	845	-45105
NL1/3	GW / opgw	11180	5976	65105	11166	6609	-65897
Wind, -5°C	150C1F1	17822	10221	124336	17797	11202	-125833
Permanent loads yg= 1.2	150C1F2	17830	9846	123823	17809	10750	-125117
Wind angle: 45°	150C1F3	17840	9372	123225	17823	10180	-124278
	380C2F1	35643	20442	248672	35594	22404	-251666
	380C2F2	35661	19692	247646	35618	21501	-250233
	380C2F3	35681	18744	246450	35645	20360	-248557
	RTG	19662	4570	128910	21041	4335	-128693
NL1/4	GW / opgw	3635	1730	25677	3633	1853	-25812
Construction/maintenance, +5°C	150C1F1	12038	5468	85939	12033	5809	-86265
Permanent loads yg= 1.2	150C1F2	12040	5337	85829	12035	5652	-86108
Wind angle: 45°	150C1F3	12042	5171	85702	12038	5453	-85927
	380C2F1	24076	10935	171879	24066	11619	-172529
	380C2F2	24080	10673	171659	24071	11304	-172217
	380C2F3	24084	10341	171404	24077	10907	-171854
	RTG	6145	891	51071	6706	846	-51034

NL1/1a	GW / opgw	2676	8660	45575	2676	8660	-45575
Wind, 10°C	150C1F1	9928	24840	138945	9928	24840	-138945
Permanent loads yg= 1.2	150C1F2	9952	23181	132641	9952	23181	-132641
Wind angle: 90°	150C1F3	9986	21076	124646	9986	21076	-124646
	380C2F1	19857	49679	277891	19857	49679	-277891
	380C2F2	19904	46362	265282	19904	46362	-265282
	380C2F3	19972	42152	249293	19972	42152	-249293
	RTG	5003	8919	71059	5204	8461	-68882
NL1/1b	GW / opgw	2821	2406	24599	2821	2406	-24599
Wind, -20°C	150C1F1	10445	7600	88212	10445	7600	-88212
Permanent loads yg= 1.2	150C1F2	10455	7297	87581	10455	7297	-87581
Wind angle: 90°	150C1F3	10467	6914	86840	10467	6914	-86840
	380C2F1	20891	15201	176425	20891	15201	-176425
	380C2F2	20910	14594	175162	20910	14594	-175162
	380C2F3	20934	13828	173680	20934	13828	-173680
	RTG	4732	1782	46670	5198	1690	-46473
NL1/3	GW / opgw	11079	9988	71765	11079	9988	-71765
Wind, -5°C	150C1F1	17637	16462	136972	17637	16462	-136972
Permanent loads yg= 1.2	150C1F2	17665	15598	134847	17665	15598	-134847
Wind angle: 90°	150C1F3	17700	14507	132311	17700	14507	-132311
	380C2F1	35274	32925	273944	35274	32925	-273944
	380C2F2	35330	31196	269694	35330	31196	-269694
	380C2F3	35400	29015	264622	35400	29015	-264622
	RTG	19770	9141	135135	21044	8671	-134334
NL1/4	GW / opgw	3617	2506	26871	3617	2506	-26871
Construction/maintenance, +5°C	150C1F1	11993	7630	88847	11993	7630	-88847
Permanent loads yg= 1.2	150C1F2	12000	7332	88334	12000	7332	-88334
Wind angle: 90°	150C1F3	12010	6955	87733	12010	6955	-87733
	380C2F1	23985	15261	177695	23985	15261	-177695
	380C2F2	24001	14664	176668	24001	14664	-176668
	380C2F3	24019	13910	175467	24019	13910	-175467
	RTG	6162	1783	52148	6706	1691	-52007
NL1/1a	GW / opgw	2726	5001	31397	2742	4304	-28767
Wind, 10°C	150C1F1	10129	14616	100732	10184	12686	-94072
Permanent loads yg= 1.2	150C1F2	10154	13728	97620	10207	11948	-91639
Wind angle: -45°	150C1F3	10187	12606	93803	10237	11017	-88686
	380C2F1	20258	29232	201464	20369	25372	-188144
	380C2F2	20307	27456	195240	20414	23897	-183278
	380C2F3	20374	25212	187607	20474	22035	-177371
	RTG	4874	4457	50884	5202	4228	-49979
NL1/1b	GW / opgw	2843	1735	23129	2846	1610	-22937
Wind, -20°C	150C1F1	10498	5753	85013	10505	5408	-84605
Permanent loads yg= 1.2	150C1F2	10501	5595	84817	10507	5276	-84467
Wind angle: -45°	150C1F3	10505	5394	84589	10510	5109	-84306
	380C2F1	20995	11507	170026	21010	10816	-169210
	380C2F2	21002	11189	169634	21015	10552	-168933
	380C2F3	21010	10788	169179	21020	10218	-168612
	RTG	4709	891	45157	5198	845	-45105
NL1/3	GW / opgw	11166	6609	65897	11180	5976	-65105
Wind, -5°C	150C1F1	17797	11202	125833	17822	10221	-124336
Permanent loads yg= 1.2	150C1F2	17809	10750	125117	17830	9846	-123823
Wind angle: -45°	150C1F3	17823	10180	124278	17840	9372	-123225
	380C2F1	35594	22404	251666	35643	20442	-248672
	380C2F2	35618	21501	250233	35661	19692	-247646
	380C2F3	35645	20360	248557	35681	18744	-246450
	RTG	19662	4570	128910	21041	4335	-128693
NL1/4	GW / opgw	3633	1853	25812	3635	1730	-25677
Construction/maintenance, +5°C	150C1F1	12033	5809	86265	12038	5468	-85939
Permanent loads yg= 1.2	150C1F2	12035	5652	86108	12040	5337	-85829
Wind angle: -45°	150C1F3	12038	5453	85927	12042	5171	-85702
	380C2F1	24066	11619	172529	24076	10935	-171879
	380C2F2	24071	11304	172217	24080	10673	-171659
	380C2F3	24077	10907	171854	24084	10341	-171404
	RTG	6145	891	51071	6706	846	-51034
NL1//1a	GW / opgw	2129	702	15793	2129	702	-15793
Wind, 10°C	150C1F1	7845	2580	58272	7845	2580	-58272
Permanent loads yg= 0.9	150C1F2	7845	2577	58272	7845	2577	-58272
Wind angle: 0°	150C1F3	7845	2574	58272	7845	2574	-58272
	380C2F1	15690	5160	116544	15690	5160	-116544
	380C2F2	15690	5155	116544	15690	5155	-116544
	380C2F3	15690	5148	116544	15690	5148	-116544
	RTG	3547	0	31566	3899	0	-31566

NL1/1b	GW / opgw	2151	780	17812	2151	780	-17812
Wind, -20°C	150C1F1	7935	2923	66776	7935	2923	-66776
Permanent loads yg= 0.9	150C1F2	7935	2922	66776	7935	2922	-66776
Wind angle: 0°	150C1F3	7935	2921	66776	7935	2921	-66776
	380C2F1	15869	5845	133551	15869	5845	-133551
	380C2F2	15869	5844	133551	15869	5844	-133551
	380C2F3	15869	5843	133551	15869	5843	-133551
	RTG	3504	0	35310	3897	0	-35310
NL1/3	GW / opgw	10529	2644	60258	10529	2644	-60258
Wind, -5°C	150C1F1	15328	4687	106883	15328	4687	-106883
Permanent loads yg= 0.9	150C1F2	15328	4685	106883	15328	4685	-106883
Wind angle: 0°	150C1F3	15328	4683	106883	15328	4683	-106883
	380C2F1	30656	9373	213766	30656	9373	-213766
	380C2F2	30656	9370	213766	30656	9370	-213766
	380C2F3	30656	9366	213766	30656	9366	-213766
	RTG	18382	0	120798	19734	0	-120798
NL1/4	GW / opgw	2942	929	21210	2942	929	-21210
Construction/maintenance, +5°C	150C1F1	9478	3052	69744	9478	3052	-69744
Permanent loads yg= 0.9	150C1F2	9478	3052	69744	9478	3052	-69744
Wind angle: 0°	150C1F3	9478	3051	69744	9478	3051	-69744
	380C2F1	18955	6104	139488	18955	6104	-139488
	380C2F2	18955	6103	139488	18955	6103	-139488
	380C2F3	18955	6102	139488	18955	6102	-139488
	RTG	4931	0	42384	5404	0	-42384
NL1/6	GW / opgw	2129	690	15793	2129	690	-15793
Permanent, +10°C	150C1F1	7845	2544	58273	7845	2544	-58273
Permanent loads yg= 0.9	150C1F2	7845	2544	58273	7845	2544	-58273
	150C1F3	7845	2544	58273	7845	2544	-58273
	380C2F1	15690	5088	116545	15690	5088	-116545
	380C2F2	15690	5088	116545	15690	5088	-116545
	380C2F3	15690	5088	116545	15690	5088	-116545
	RTG	3547	0	31566	3899	0	-31566
NL1/1a	GW / opgw	2040	4202	26443	2028	4913	-29398
Wind, 10°C	150C1F1	7586	12241	83914	7540	14223	-91748
Permanent loads yg= 0.9	150C1F2	7606	11482	80987	7560	13312	-88117
Wind angle: 45°	150C1F3	7634	10522	77375	7588	12159	-83593
	380C2F1	15172	24483	167828	15079	28445	-183495
	380C2F2	15213	22964	161973	15120	26623	-176234
	380C2F3	15267	21044	154749	15177	24317	-167186
	RTG	3682	4457	45078	3901	4228	-43988
NL1/1b	GW / opgw	2140	1415	18474	2136	1544	-18745
Wind, -20°C	150C1F1	7910	4690	68175	7901	5043	-68762
Permanent loads yg= 0.9	150C1F2	7914	4556	67974	7905	4881	-68480
Wind angle: 45°	150C1F3	7918	4385	67742	7911	4676	-68152
	380C2F1	15821	9381	136349	15802	10087	-137524
	380C2F2	15828	9111	135949	15811	9762	-136961
	380C2F3	15835	8770	135483	15822	9351	-136305
	RTG	3515	891	36057	3898	845	-35984
NL1/3	GW / opgw	10490	5854	62324	10476	6490	-63180
Wind, -5°C	150C1F1	15253	9651	111301	15225	10645	-113105
Permanent loads yg= 0.9	150C1F2	15263	9271	110680	15238	10187	-112243
Wind angle: 45°	150C1F3	15274	8792	109953	15254	9610	-111231
	380C2F1	30505	19302	222602	30449	21290	-226210
	380C2F2	30525	18542	221359	30476	20374	-224486
	380C2F3	30549	17583	219907	30507	19219	-222462
	RTG	18426	4569	123182	19735	4334	-122948
NL1/4	GW / opgw	2936	1553	21626	2933	1678	-21802
Construction/maintenance, +5°C	150C1F1	9461	4805	70780	9454	5152	-71222
Permanent loads yg= 0.9	150C1F2	9463	4672	70629	9457	4992	-71010
Wind angle: 45°	150C1F3	9466	4505	70455	9461	4791	-70763
	380C2F1	18921	9611	141559	18907	10304	-142444
	380C2F2	18926	9345	141259	18914	9985	-142019
	380C2F3	18931	9009	140910	18922	9582	-141525
	RTG	4938	891	42864	5404	845	-42816
NL1/1a	GW / opgw	1995	8614	44516	1995	8614	-44516
Wind, 10°C	150C1F1	7396	24615	133836	7396	24615	-133836
Permanent loads yg= 0.9	150C1F2	7411	22938	127100	7411	22938	-127100
Wind angle: 90°	150C1F3	7434	20805	118471	7434	20805	-118471
	380C2F1	14791	49230	267671	14791	49230	-267671
	380C2F2	14822	45875	254200	14822	45875	-254200
	380C2F3	14868	41609	236941	14868	41609	-236941
	RTG	3781	8918	67776	3903	8460	-65422

NL1/1b	GW / opgw	2111	2237	20740	2111	2237	-20740
Wind, -20°C	150C1F1	7835	6946	73239	7835	6946	-73239
Permanent loads yg= 0.9	150C1F2	7847	6632	72371	7847	6632	-72371
Wind angle: 90°	150C1F3	7861	6237	71343	7861	6237	-71343
	380C2F1	15669	13892	146478	15669	13892	-146478
	380C2F2	15693	13264	144742	15693	13264	-144742
	380C2F3	15723	12474	142686	15723	12474	-142686
	RTG	3546	1781	38169	3898	1690	-37898
NL1/3	GW / opgw	10385	9887	69457	10385	9887	-69457
Wind, -5°C	150C1F1	15052	15990	126182	15052	15990	-126182
Permanent loads yg= 0.9	150C1F2	15081	15111	123728	15081	15111	-123728
Wind angle: 90°	150C1F3	15118	14002	120775	15118	14002	-120775
	380C2F1	30104	31979	252364	30104	31979	-252364
	380C2F2	30162	30222	247455	30162	30222	-247455
	380C2F3	30235	28004	241550	30235	28004	-241550
	RTG	18541	9140	129891	19738	8670	-129031
NL1/4	GW / opgw	2914	2343	23157	2914	2343	-23157
Construction/maintenance, +5°C	150C1F1	9404	7011	74668	9404	7011	-74668
Permanent loads yg= 0.9	150C1F2	9413	6705	73991	9413	6705	-73991
Wind angle: 90°	150C1F3	9425	6320	73194	9425	6320	-73194
	380C2F1	18808	14021	149336	18808	14021	-149336
	380C2F2	18827	13410	147982	18827	13410	-147982
	380C2F3	18849	12639	146389	18849	12639	-146389
	RTG	4959	1782	44256	5404	1691	-44074
NL1/1a	GW / opgw	2028	4913	29398	2040	4202	-26443
Wind, 10°C	150C1F1	7540	14223	91748	7586	12241	-83914
Permanent loads yg= 0.9	150C1F2	7560	13312	88117	7606	11482	-80987
Wind angle: -45°	150C1F3	7588	12159	83593	7634	10522	-77375
	380C2F1	15079	28445	183495	15172	24483	-167828
	380C2F2	15120	26623	176234	15213	22964	-161973
	380C2F3	15177	24317	167186	15267	21044	-154749
	RTG	3682	4457	45078	3901	4228	-43988
NL1/1b	GW / opgw	2136	1544	18745	2140	1415	-18474
Wind, -20°C	150C1F1	7901	5043	68762	7910	4690	-68175
Permanent loads yg= 0.9	150C1F2	7905	4881	68480	7914	4556	-67974
Wind angle: -45°	150C1F3	7911	4676	68152	7918	4385	-67742
	380C2F1	15802	10087	137524	15821	9381	-136349
	380C2F2	15811	9762	136961	15828	9111	-135949
	380C2F3	15822	9351	136305	15835	8770	-135483
	RTG	3515	891	36057	3898	845	-35984
NL1/3	GW / opgw	10476	6490	63180	10490	5854	-62324
Wind, -5°C	150C1F1	15225	10645	113105	15253	9651	-111301
Permanent loads yg= 0.9	150C1F2	15238	10187	112243	15263	9271	-110680
Wind angle: -45°	150C1F3	15254	9610	111231	15274	8792	-109953
	380C2F1	30449	21290	226210	30505	19302	-222602
	380C2F2	30476	20374	224486	30525	18542	-221359
	380C2F3	30507	19219	222462	30549	17583	-219907
	RTG	18426	4569	123182	19735	4334	-122948
NL1/4	GW / opgw	2933	1678	21802	2936	1553	-21626
Construction/maintenance, +5°C	150C1F1	9454	5152	71222	9461	4805	-70780
Permanent loads yg= 0.9	150C1F2	9457	4992	71010	9463	4672	-70629
Wind angle: -45°	150C1F3	9461	4791	70763	9466	4505	-70455
	380C2F1	18907	10304	142444	18921	9611	-141559
	380C2F2	18914	9985	142019	18926	9345	-141259
	380C2F3	18922	9582	141525	18931	9009	-140910
	RTG	4938	891	42864	5404	845	-42816

ZWW4S450+5

Loadcases for tower strength (serviceability limit state)

		Ahead			Back		
Loadcase according to 50341-3-15	Att. Point	Vertical [N]	Transversal [N]	Longitudinal [N]	Vertical [N]	Transversal [N]	Longitudinal [N]
NL4/1a	GW / opgw	2363	764	17295	2363	764	-17295
Wind, 10°C	150C1F1	8706	2806	63716	8706	2806	-63716
Permanent loads yg= 1.0	150C1F2	8706	2804	63716	8706	2804	-63716
Wind angle: 0°	150C1F3	8706	2802	63716	8706	2802	-63716
	380C2F1	17412	5611	127432	17412	5611	-127432
	380C2F2	17412	5608	127432	17412	5608	-127432
	380C2F3	17412	5604	127432	17412	5604	-127432
	RTG	3947	0	34574	4333	0	-34574
NL4/1b	GW / opgw	2385	849	19410	2385	849	-19410
Wind, -20°C	150C1F1	8799	3173	72563	8799	3173	-72563
Permanent loads yg= 1.0	150C1F2	8799	3173	72563	8799	3173	-72563
Wind angle: 0°	150C1F3	8799	3172	72563	8799	3172	-72563
	380C2F1	17598	6346	145125	17598	6346	-145125
	380C2F2	17598	6345	145125	17598	6345	-145125
	380C2F3	17598	6344	145125	17598	6344	-145125
	RTG	3902	0	38499	4331	0	-38499
NL4/3	GW / opgw	7980	2137	48745	7980	2137	-48745
Wind, -5°C	150C1F1	13712	4283	97793	13712	4283	-97793
Permanent loads yg= 1.0	150C1F2	13712	4282	97793	13712	4282	-97793
Wind angle: 0°	150C1F3	13712	4281	97793	13712	4281	-97793
	380C2F1	27424	8566	195587	27424	8566	-195587
	380C2F2	27424	8564	195587	27424	8564	-195587
	380C2F3	27424	8562	195587	27424	8562	-195587
	RTG	13792	0	97633	14884	0	-97633
NL4/4	GW / opgw	2906	918	20988	2906	918	-20988
Construction/maintenance, +5°C	150C1F1	9798	3136	71719	9798	3136	-71719
Permanent loads yg= 1.0	150C1F2	9798	3136	71719	9798	3136	-71719
Wind angle: 0°	150C1F3	9798	3135	71719	9798	3135	-71719
	380C2F1	19596	6272	143438	19596	6272	-143438
	380C2F2	19596	6271	143438	19596	6271	-143438
	380C2F3	19596	6271	143438	19596	6271	-143438
	RTG	4868	0	41936	5336	0	-41936
NL4/1a	GW / opgw	2305	3013	22486	2292	3476	-24211
Wind, 10°C	150C1F1	8555	9013	75470	8514	10289	-79681
Permanent loads yg= 1.0	150C1F2	8572	8526	73960	8533	9701	-77700
Wind angle: 45°	150C1F3	8592	7912	72149	8557	8960	-75303
	380C2F1	17111	18026	150940	17028	20578	-159362
	380C2F2	17143	17052	147920	17066	19402	-155400
	380C2F3	17184	15825	144299	17115	17919	-150605
	RTG	4024	2971	40754	4334	2818	-40196
NL4/1b	GW / opgw	2381	1264	19665	2379	1347	-19774
Wind, -20°C	150C1F1	8789	4334	73091	8785	4562	-73322
Permanent loads yg= 1.0	150C1F2	8791	4246	73013	8787	4457	-73211
Wind angle: 45°	150C1F3	8792	4136	72923	8789	4324	-73083
	380C2F1	17578	8668	146183	17570	9124	-146643
	380C2F2	17581	8493	146027	17574	8914	-146422
	380C2F3	17584	8271	145847	17579	8649	-146165
	RTG	3906	594	38793	4331	563	-38763
NL4/3	GW / opgw	7955	4274	50078	7946	4697	-50637
Wind, -5°C	150C1F1	13672	7563	100071	13657	8215	-101028
Permanent loads yg= 1.0	150C1F2	13677	7314	99745	13664	7915	-100569
Wind angle: 45°	150C1F3	13684	6999	99365	13673	7536	-100035
	380C2F1	27344	15126	200142	27313	16429	-202056
	380C2F2	27355	14627	199489	27328	15829	-201139
	380C2F3	27368	13997	198729	27345	15072	-200069
	RTG	13820	3044	99171	14885	2888	-99019
NL4/4	GW / opgw	2903	1331	21172	2902	1412	-21252
Construction/maintenance, +5°C	150C1F1	9791	4293	72146	9787	4520	-72334
Permanent loads yg= 1.0	150C1F2	9792	4206	72082	9789	4416	-72243
Wind angle: 45°	150C1F3	9793	4096	72009	9791	4284	-72139
	380C2F1	19581	8587	144291	19575	9040	-144668
	380C2F2	19583	8413	144164	19578	8831	-144487
	380C2F3	19586	8193	144018	19581	8568	-144277
	RTG	4871	594	42153	5336	564	-42132
NL4/1a	GW / opgw	2246	5931	34048	2246	5931	-34048
Wind, 10°C	150C1F1	8343	17111	105395	8343	17111	-105395
Permanent loads yg= 1.0	150C1F2	8365	15998	101017	8365	15998	-101017
Wind angle: 90°	150C1F3	8396	14589	95529	8396	14589	-95529
	380C2F1	16686	34221	210790	16686	34221	-210790
	380C2F2	16730	31996	202033	16730	31996	-202033
	380C2F3	16792	29177	191057	16792	29177	-191057
	RTG	4126	5943	53968	4335	5638	-52486

NL4/1b	GW / opgw	2366	1788	20624	2366	1788	-20624
Wind, -20°C	150C1F1	8755	5780	75154	8755	5780	-75154
Permanent loads yg= 1.0	150C1F2	8761	5580	74789	8761	5580	-74789
Wind angle: 90°	150C1F3	8768	5328	74363	8768	5328	-74363
	380C2F1	17509	11560	150308	17509	11560	-150308
	380C2F2	17521	11161	149578	17521	11161	-149578
	380C2F3	17535	10656	148725	17535	10656	-148725
	RTG	3920	1188	39654	4331	1127	-39541
NL4/3	GW / opgw	7884	6959	54813	7884	6959	-54813
Wind, -5°C	150C1F1	13551	11713	108280	13551	11713	-108280
Permanent loads yg= 1.0	150C1F2	13570	11137	106880	13570	11137	-106880
Wind angle: 90°	150C1F3	13593	10412	105218	13593	10412	-105218
	380C2F1	27101	23425	216560	27101	23425	-216560
	380C2F2	27139	22275	213760	27139	22275	-213760
	380C2F3	27186	20824	210437	27186	20824	-210437
	RTG	13894	6089	103556	14886	5777	-102989
NL4/4	GW / opgw	2892	1844	21888	2892	1844	-21888
Construction/maintenance, +5°C	150C1F1	9764	5724	73846	9764	5724	-73846
Permanent loads yg= 1.0	150C1F2	9769	5527	73543	9769	5527	-73543
Wind angle: 90°	150C1F3	9774	5278	73191	9774	5278	-73191
	380C2F1	19528	11449	147692	19528	11449	-147692
	380C2F2	19537	11054	147086	19537	11054	-147086
	380C2F3	19548	10556	146381	19548	10556	-146381
	RTG	4881	1188	42796	5336	1127	-42711
NL4/1a	GW / opgw	2292	3476	24211	2305	3013	-22486
Wind, 10°C	150C1F1	8514	10289	79681	8555	9013	-75470
Permanent loads yg= 1.0	150C1F2	8533	9701	77700	8572	8526	-73960
Wind angle: -45°	150C1F3	8557	8960	75303	8592	7912	-72149
	380C2F1	17028	20578	159362	17111	18026	-150940
	380C2F2	17066	19402	155400	17143	17052	-147920
	380C2F3	17115	17919	150605	17184	15825	-144299
	RTG	4024	2971	40754	4334	2818	-40196
NL4/1b	GW / opgw	2379	1347	19774	2381	1264	-19665
Wind, -20°C	150C1F1	8785	4562	73322	8789	4334	-73091
Permanent loads yg= 1.0	150C1F2	8787	4457	73211	8791	4246	-73013
Wind angle: -45°	150C1F3	8789	4324	73083	8792	4136	-72923
	380C2F1	17570	9124	146643	17578	8668	-146183
	380C2F2	17574	8914	146422	17581	8493	-146027
	380C2F3	17579	8649	146165	17584	8271	-145847
	RTG	3906	594	38793	4331	563	-38763
NL4/3	GW / opgw	7946	4697	50637	7955	4274	-50078
Wind, -5°C	150C1F1	13657	8215	101028	13672	7563	-100071
Permanent loads yg= 1.0	150C1F2	13664	7915	100569	13677	7314	-99745
Wind angle: -45°	150C1F3	13673	7536	100035	13684	6999	-99365
	380C2F1	27313	16429	202056	27344	15126	-200142
	380C2F2	27328	15829	201139	27355	14627	-199489
	380C2F3	27345	15072	200069	27368	13997	-198729
	RTG	13820	3044	99171	14885	2888	-99019
NL4/4	GW / opgw	2902	1412	21252	2903	1331	-21172
Construction/maintenance, +5°C	150C1F1	9787	4520	72334	9791	4293	-72146
Permanent loads yg= 1.0	150C1F2	9789	4416	72243	9792	4206	-72082
Wind angle: -45°	150C1F3	9791	4284	72139	9793	4096	-72009
	380C2F1	19575	9040	144668	19581	8587	-144291
	380C2F2	19578	8831	144487	19583	8413	-144164
	380C2F3	19581	8568	144277	19586	8193	-144018
	RTG	4871	594	42153	5336	564	-42132

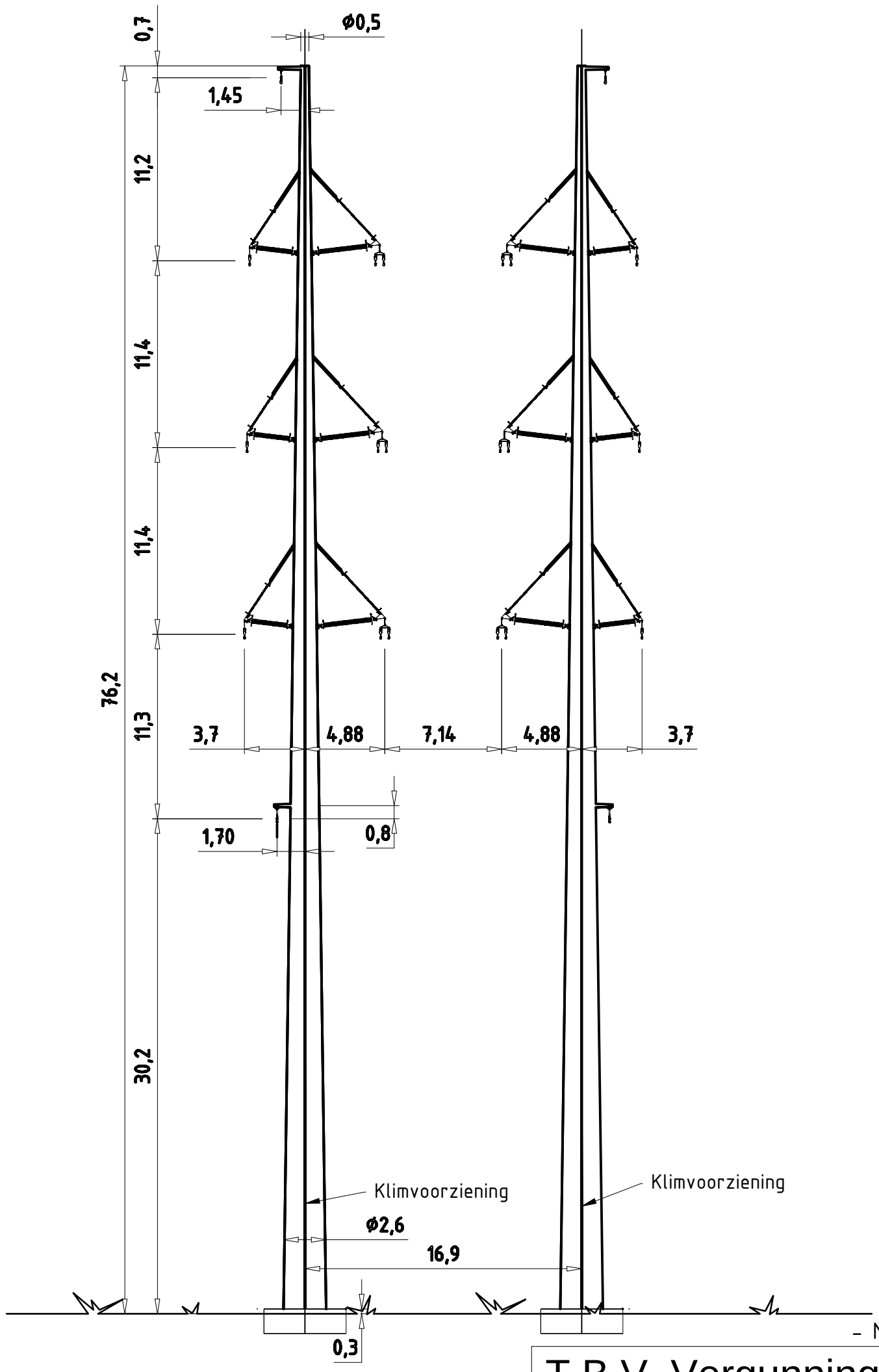

– Maatvoering indicatief

T.B.V. Vergunnings aanvraag

Wintrack
Masttype: ZWW4S450+5

- Trekparameter 1800m
- 2x380 / 2x150 Steunmast
- 450m Veldlengte
- 175°-180° Lijnhoek
- Uitvoering Staal of Beton
- Kleurstelling hoofdelement:
  Ral 9018 Papyrus white
- Kleurstelling Appendages:
  Ral 7021 Black grey

4.0	03-03-2014	Increased space between poles
3.0	11-02-2014	Modified top/botom diameter and added new braced-V
2.0	11-03-2013	Small modification

KEMA DNV

Projectname: Engineering verbinding ZW380

Third angle projection:

Drawing no.: 74102194-035-102V

Design state: DEFINITIEF		Scale: 1:300	
Drawn by: BJT	03-03-2014	Units: m	
Checked by: AJP	03-03-2014	Project no: 000.145	
Approved by: AW	03-03-2014	Company: TenneT	

Description: Wintrack Masttype ZWW4S450+5

Revision: 4.0

Format: A3

DNV KEMA Energy & Sustainability, Utrechtseweg 310, 6812 AR Arnhem, tel: +31 26 3 56 91 11, www.dnvkema.com

© 2012 - Filename: 74102194-035-102 - ZWW4S450+5 Rev4.0.dwg

ZWW4HK450

Fundatie berekening

Bijlage CM

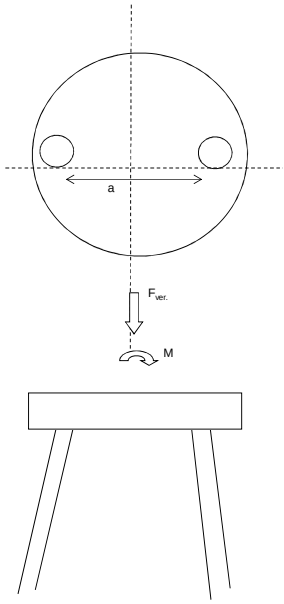

Fundatie ontwerp:
Heipaal

Afmetingen	b	400	mm	
	d	400	mm	
omtrek paal	$O_{p;gem}$	1,6	m	
schoorstand		8	:1	
α		7,125	graden	
Opstort	Diameter	5,6	m	
	Hoogte	1,8	m	
	Inhoud	44,3	m^3	
	e.g.	1064	kN	
Onderplaat	Diameter	13,0	m	
	Hoogte	1,3	m	
	Inhoud	173	m^3	
	e.g.	4141	kN	
Hart paal tov rand fund.		0,6	m	

Optreden krachten

e.g. mast	908	kN	
Fgeleiders	183	kN	
Maximale dwarskracht	1163	kN	
Fmax vert (druk)	1273	kN	
Fmin vert (trek)	955	kN	
Maximale moment	56791	kNm	

Moment

F_{diag}	5158	kN	
F_{hor}	1163	kN	
F_{ver}	5118	kN	
M_{hor} (tgv F_{hor})	3604	kNm	
M_{tot}	60395	kNm	reductie door opwaarste kracht water
F=M/a	5118	kN	

Verticaal reactiekracht

Fwater (trek)	2169	kN	
Fgrond (druk)	2919	kN	
Fgrond (trek)	2432	kN	
Fdmax (druk)	5511	kN	
Ftmax (trek)	2613	kN	
Fdtot (druk)	10629	kN	
Fttot (trek)	2505	kN	
Palen druk	10	(-)	
Palen trek	8	(-)	
Totaal palen	20	(-)	Per fundering

ZWW4HK450

TREKPALEN volgens CUR 2001-4 par. 8.

$$F_{r;trek;d} = \int_0^L O_{p;gem} \times p_{r;z;d} \times dz$$

Bijlage CM

Bepaling opneembare paalbelasting op druk

heipaal

Afmeting paal	b	0,40	m
	b	0,40	m
omtrek paal	$O_{p;gem}$	1,60	m
paalfactor	α t	0,007	
aantal palen	M	1	
aantal sonderingen	N	1	
factor invloed aantal sonderingen	ξ	0,75	
conusweerstand over wrijvingstraject	$q_{c;z;max}$	15	MPa
	$q_{c;z;rep}$	11,25	MPa
materiaalfactor	$\gamma_{m;b4}$	1,4	
factor, wisselende belastingen	$\gamma_{m;var;qc}$	1,5	
	$q_{c;z;d}$	5,36	MPa
	$p_{r;z;d}$	37,5	kN/m^2
	$F_{r;trek;d;i}$	60,0	kN/m^1
	$F_{trek,d}$	596	kN/m

Bepaling opneembare trekbelasting paal

sondering	diepte		$q_{c;z}$		$P_{r;max;schacht;i}$	$F_{r;trek;d;i}$	$F_{trek,d}$
	m	m	MPa	α t	kPa	kN	kN
	0	-1	0	0,007	0,00	0,00	0
	-1	-2	0	0,007	0,00	0,00	0
	-2	-3	0	0,007	0,00	0,00	0
	-3	-4	0	0,007	0,00	0,00	0
	-4	-5	0	0,007	0,00	0,00	0
	-5	-6	0	0,007	0,00	0,00	0
	-6	-7	0	0,007	0,00	0,00	0
	-7	-8	0	0,007	0,00	0,00	0
	-8	-9	1	0,007	2,50	4,00	4
	-9	-10	3	0,007	7,50	12,00	16
	-10	-11	2	0,007	5,00	8,00	24
	-11	-12	0	0,007	0,00	0,00	24
	-12	-13	3	0,007	7,50	12,00	36
	-13	-14	2	0,007	5,00	8,00	44
	-14	-15	4	0,007	10,00	16,00	60
	-15	-16	10	0,007	25,00	40,00	100
	-16	-17	9	0,007	22,50	36,00	136
	-17	-18	8	0,007	20,00	32,00	168
	-18	-19	12	0,007	30,00	48,00	216
	-19	-20	12	0,007	30,00	48,00	264
	-20	-21	10	0,007	25,00	40,00	304
	-21	-22	11	0,007	27,50	44,00	348
	-22	-23	11	0,007	27,50	44,00	392
	-23	-24	12	0,007	30,00	48,00	440
	-24	-25	12	0,007	30,00	48,00	488
	-25	-26	12	0,007	30,00	48,00	536
	-26	-27	15	0,007	37,50	60,00	596

$F_{trek,d}$	596	kN	paalafmeting	400	mm, paalpuntnivo	-27,00 m

Paalgroep factor	10%	
$F_{trek,d}$	**536,4**	kN

ZWW4HK450

DRUKPALEN

FUNDERINGSCONSTRUCTIE
Toelaatbare paalbelastingen

Bijlage CM

Bepaling opneembare paalbelasting op druk

heipaal

		v		
	diameter	a	2	mm
			2	mm
	Deq		0,001808	

maximale puntweerstand

$P_{r;max;punt;i}$		11,25	MN/m²
paalklasse factor	α_p	1,00	
factor paalvoet	β	1	
hoek van inwendige vrijwing van paalvoet	ϕ	40	
factor dwarsdoorsnede paalvoet	s	1,00	
minimale waarde neergaande deel	$q_{c;ll;gem}$	9,00	MN/m²
gem. sondeerwaarde neergaande deel	$q_{c;l;gem}$	14,00	MN/m²
gem. sondeerwaarde opgaande deel	$q_{c;ll;gem}$	11,00	MN/m²

maximale paalschachtwrijving

$P_{r;max;schacht;i}$		0,05	MN/m²

waarin:

paalfactor	α_s	0,010	
conusweerstand over wrijvingstraject	$q_{c;z;a}$	5,00	MN/m²

maximale draagkracht alleenstaande paal

$\mathbf{F_{r;max;i}}$		0,00	MN

waarin:

$\mathbf{F_{r;max;punt;i}}$		0,00	MN
paalpunt oppervlak	A_{punt}	0,00	m²
$\mathbf{F_{r;max;schacht;i}}$		0,00	MN
gemiddelde paalomtrek	$O_{p;gem}$	0,01	m
lengte schachtwrijving	Δl	15,00	m

Bepaling rekenwaarde van de maximale draagkracht

$F_{r;paal;max;d}$	MN	0,00	MN
materiaalfactor grond	$\gamma_{m;b}$	1,20	
waarde afhankelijk van aantal palen en aantal sonderingen	$\xi_{1;N}$	0,75	

$F_{r;paal;max;d}$	3	kN	mm, paalpuntnivo	-27,00	m

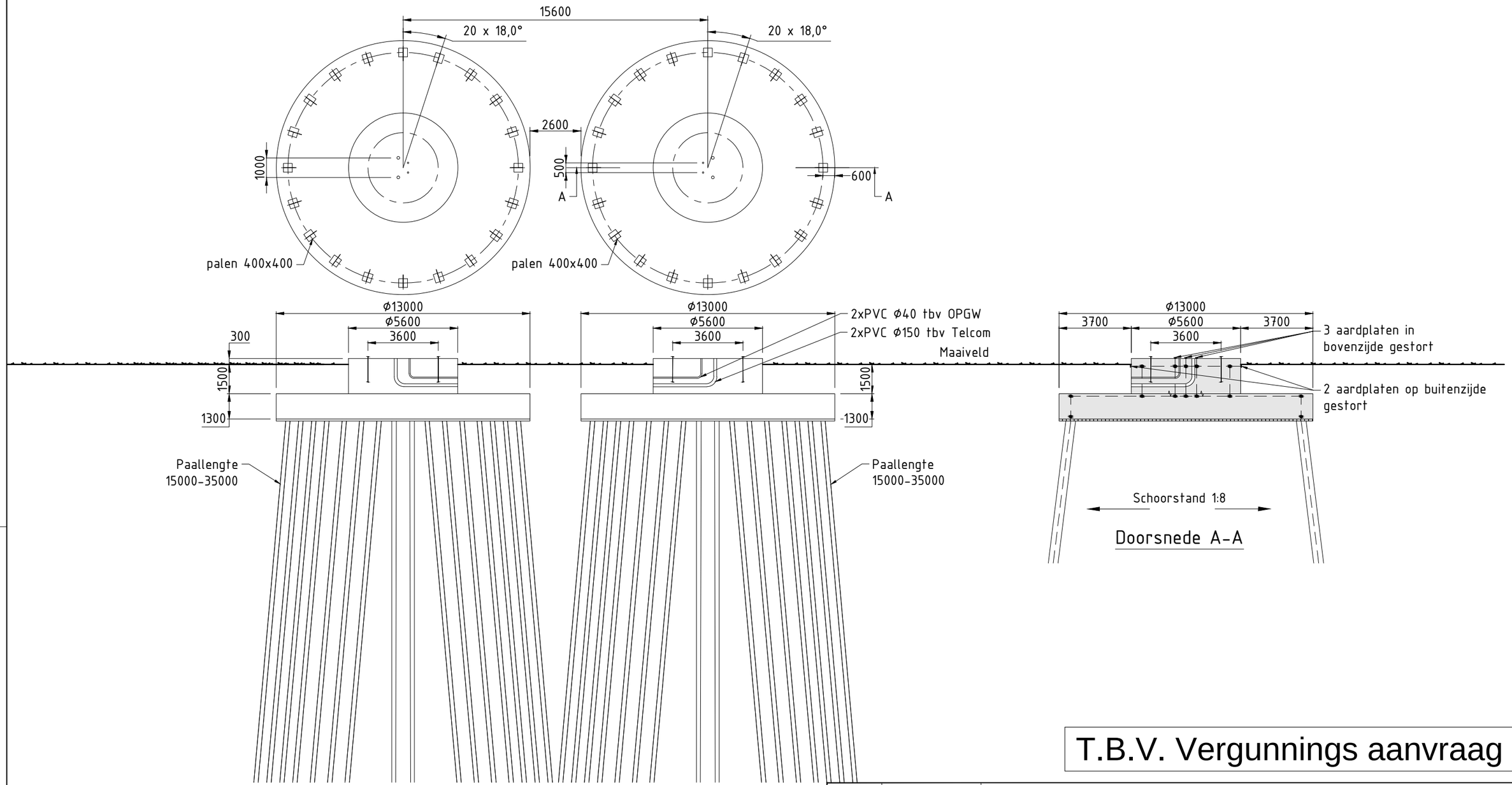

T.B.V. Vergunnings aanvraag

6.0	10-03-2014	Diverse aanpassingen
5.0	26-07-2013	Diverse aanpassingen
4.0	13-06-2013	Fundering tekst toegevoegd

Verklaring

Gewapend beton

Werkvloer

Verklaring aarding

Ringleiding Ø16mm (FeB220) glad

Koppeling met aardstaaf in paal

Aardplaten

Opmerkingen

Maten in mm
Coordinaten in mm, in het stelsel van de rijksdriehoekmeting
Maatvoering in het 360 graden stelsel
Vellingkanten niet getekend
Ringleiding in bovenkant poer op het bovennet plaatsen in de eerste laag
Mastvoetanker afmeting exclusief mastvoetflens breedte
Afmetingen indicatief

Projectname:
Engineering verbinding ZW380

Third angle projection:

Drawing no.:
74102194-032-111

Design state: Definitief		Scale:	1:200
Drawn by: RBE	10-03-2014	Units:	mm
Checked by: AJP	10-03-2014	Project no:	000.145
Approved by: AW	10-03-2014	Company:	TenneT

Description:
Principe ontwerp fundatie hoekmast ZWW4HK450 masten familie

Revision: 6.0

Format: A3

DNV KEMA Energy & Sustainability, Utrechtseweg 310, 6812 AR Arnhem, tel: +31 26 3 56 91 11, www.dnvkema.com

© 2013 - Filename: 74102194-032-111 - ZWW4HK450 Principe ontwerp fundaties_rev6.0.dwg

ZWW4HK450

Bijlage BM

Location dependent data to obtain pressures

Wind area			2	
Terrain catagory	O=onbebouwd, B=bebouwd		O	
Hoogte		h	71.1	m
Diameter voet		d voet	3.6	m
top		d top	0.8	m
gem		d gem	2.2	m
wanddikte		t	24	mm
Oppervlakte aan voet		A	269624	mm^2
Traagheidsmoment aan voet		W_x	2.39E+08	mm^3
Weerstandsmoment aan voet		I_x	4.26E+11	mm^4
		2de orde	10.0	%
Mast: Gewicht		$F_{rep;ver}$	908	kN

Ultimate limit state	**hoogte**	**F_{ver}**	**$F_{loodrecht}$**	**$F_{//}$**	$F_{Samengesteld}$		
	m	kN	kN	kN	kN		
GW / opgw	70.5	5.2	34.6	0.0	34.6	3212	kNm
150C1F1	59.3	19.2	102.7	0.0	102.7	6170	kNm
150C1F2	47.9	19.2	96.7	0.0	96.7	4883	kNm
150C1F3	36.5	19.2	89.2	0.0	89.2	3629	kNm
380C2F1	59.3	38.4	205.4	0.0	205.4	12340	kNm
380C2F2	47.9	38.4	193.5	0.0	193.5	9766	kNm
380C2F3	36.5	38.4	178.4	0.0	178.4	7259	kNm
RTG	25.2	5.2	24.8	-62.2	67.0	1947	kNm

Stuwdruk	$F_{hor.}$	46.6	kN
	$M_{d;wind}$	1476	kNm
Totaal	$M_{d;tot}$	51628	kNm
Totaal moment incl. 2de orde effect	$M_{d;tot}$	56791	kNm

Normaalkracht;

Optredende normaalkracht

$N_{d;geleiders}$		183	kN
$N_{d;\ e.g.\ mast}$		1090	kN
$N_{s;d;totaal}$		1273	kN

Is buis plooigevoelig tgv normaalkracht: conform NEN-EN 50341 par. 7.4.5.4 — JA

ρ_a	0.58	
A_{eff}	155850	mm^2

Optredende spanning tgv normaalkracht

$N_{sd}/A_{eff} = f_{yd}/y_{m1}$ — 8 N/mm^2

Moment;

Optredende moment in de voet:

$M_{d;tot}$ — 56791 kNm

Is buis plooigevoelig tgv momentkracht: conform NEN-EN 50341 par. 7.4.5.4 — JA

ρ_a	0.88	
W_{eff}	2.10E+08	mm^3

Optredende spaning tgv moment:

$M_d/W_{eff} = f_{yd}/y_{m1}$ — 270 N/mm^2

Totale spanning:

σ_d	278	N/mm^2	< 284 N/mm^2 = ACCOORD
$\sigma_{d;toegestaan}$	284	N/mm^2	==> 80% van 355 N/mm^2

Special limit state	**hoogte**	**F_{ver}**	**$F_{loodrecht}$**	**$F_{//}$**	$F_{Samengesteld}$		
	m	kN	kN	kN	kN		
GW / opgw	70.5	4.3	24.9	0.0	24.9	1754	kNm
150C1F1	59.3	16.0	74.9	0.0	74.9	4442	kNm
150C1F2	47.9	16.0	70.9	0.0	70.9	3394	kNm
150C1F3	36.5	16.0	65.8	0.0	65.8	2401	kNm
380C2F1	59.3	32.0	149.8	0.0	149.8	8884	kNm
380C2F2	47.9	32.0	141.7	0.0	141.7	6789	kNm
380C2F3	36.5	32.0	131.6	0.0	131.6	4803	kNm
RTG	25.2	4.3	18.2	-47.7	51.1	1288	kNm

Stuwdruk	$F_{hor.}$	1251	kN	
Verplaating		1.26	m	3.88 EIS TENNET VISUEE
Percentage van de verplaatsing		1.77%		5.5% NEN-EN-50341
Hoek		1.85	graden	
Kromming		0.39%		1% NEN-EN-50341
Fundatie rotatiestijfheid		0.005	rad	

ZWW4HK450

Loadcases for tower strength (ultimate limit state)

		Ahead			Back		
Loadcase according to 50341-3-15	Att. Point	Vertical [N]	Transversal [N]	Longitudinal [N]	Vertical [N]	Transversal [N]	Longitudinal [N]
NL1/1a	GW / opgw	2604	5731	19681	2604	5731	-19681
Wind, 10°C	150C1F1	9593	20587	72041	9593	20587	-72041
Permanent loads yg= 1.2	150C1F2	9593	20472	71991	9593	20472	-71991
Wind angle: 0°	150C1F3	9593	20328	71936	9593	20328	-71936
	380C2F1	19186	41174	144083	19186	41174	-144083
	380C2F2	19186	40943	143982	19186	40943	-143982
	380C2F3	19186	40655	143871	19186	40655	-143871
	RTG	0	0	0	5200	11069	-39120
NL1/1b	GW / opgw	2603	5890	21642	2603	5890	-21642
Wind, -20°C	150C1F1	9588	21828	80507	9588	21828	-80507
Permanent loads yg= 1.2	150C1F2	9588	21809	80509	9588	21809	-80509
Wind angle: 0°	150C1F3	9588	21783	80512	9588	21783	-80512
	380C2F1	19175	43657	161014	19175	43657	-161014
	380C2F2	19175	43617	161018	19175	43617	-161018
	380C2F3	19175	43567	161024	19175	43567	-161024
	RTG	0	0	0	5198	11624	-42945
NL1/3	GW / opgw	10505	16969	61573	10505	16969	-61573
Wind, -5°C	150C1F1	16533	32074	117024	16533	32074	-117024
Permanent loads yg= 1.2	150C1F2	16533	32017	117026	16533	32017	-117026
Wind angle: 0°	150C1F3	16533	31946	117030	16533	31946	-117030
	380C2F1	33067	64148	234049	33067	64148	-234049
	380C2F2	33067	64035	234053	33067	64035	-234053
	380C2F3	33067	63893	234061	33067	63893	-234061
	RTG	0	0	0	21038	33652	-123349
NL1/4	GW / opgw	3356	6673	24562	3356	6673	-24562
Construction/maintenance, +5°C	150C1F1	11098	22350	82453	11098	22350	-82453
Permanent loads yg= 1.2	150C1F2	11098	22330	82455	11098	22330	-82455
Wind angle: 0°	150C1F3	11098	22305	82459	11098	22305	-82459
	380C2F1	22195	44700	164906	22195	44700	-164906
	380C2F2	22195	44660	164911	22195	44660	-164911
	380C2F3	22195	44611	164918	22195	44611	-164918
	RTG	0	0	0	6705	13264	-49063
NL1/6	GW / opgw	2930	5791	21613	2930	5791	-21613
Permanent, +10°C	150C1F1	10793	21243	79282	10793	21243	-79282
Permanent loads yg= 1.35	150C1F2	10793	21243	79282	10793	21243	-79282
	150C1F3	10793	21243	79282	10793	21243	-79282
	380C2F1	21587	42487	158563	21587	42487	-158563
	380C2F2	21587	42487	158563	21587	42487	-158563
	380C2F3	21587	42487	158563	21587	42487	-158563
	RTG	0	0	0	5851	11571	-43184
NL1/1a	GW / opgw	2604	7637	22131	2606	14633	-35485
Wind, 10°C	150C1F1	9594	25482	77220	9599	43997	-110530
Permanent loads yg= 1.2	150C1F2	9594	24874	76369	9598	41624	-105938
Wind angle: 45°	150C1F3	9594	24126	75379	9597	38645	-100228
	380C2F1	19188	50964	154440	19198	87994	-221060
	380C2F2	19188	49747	152737	19197	83248	-211877
	380C2F3	19187	48252	150759	19195	77290	-200456
	RTG	0	0	0	5203	21464	-55595
NL1/1b	GW / opgw	2603	6158	21709	2603	7082	-22611
Wind, -20°C	150C1F1	9588	22556	80605	9588	24956	-82417
Permanent loads yg= 1.2	150C1F2	9588	22473	80579	9588	24640	-82088
Wind angle: 45°	150C1F3	9588	22369	80552	9588	24250	-81713
	380C2F1	19175	45111	161209	19176	49913	-164833
	380C2F2	19175	44945	161158	19176	49280	-164176
	380C2F3	19175	44738	161103	19176	48501	-163427
	RTG	0	0	0	5198	13011	-43661
NL1/3	GW / opgw	10505	18316	61805	10507	22786	-65381
Wind, -5°C	150C1F1	16534	34178	117564	16536	41401	-124536
Permanent loads yg= 1.2	150C1F2	16534	33935	117449	16535	40441	-123335
Wind angle: 45°	150C1F3	16534	33631	117322	16535	39259	-121941
	380C2F1	33067	68356	235127	33071	82801	-249072
	380C2F2	33067	67869	234897	33071	80882	-246669
	380C2F3	33067	67262	234645	33070	78518	-243882
	RTG	0	0	0	21040	40516	-126082
NL1/4	GW / opgw	3357	6930	24591	3357	7772	-25184
Construction/maintenance, +5°C	150C1F1	11098	23063	82496	11098	25345	-83861
Permanent loads yg= 1.2	150C1F2	11098	22982	82479	11098	25049	-83606
Wind angle: 45°	150C1F3	11098	22881	82462	11098	24682	-83318
	380C2F1	22195	46126	164991	22196	50690	-167722
	380C2F2	22195	45965	164958	22196	50097	-167212
	380C2F3	22195	45762	164924	22196	49363	-166635
	RTG	0	0	0	6706	14571	-49480

NL1/1a	GW / opgw	2607	17303	40774	2607	17303	-40774
Wind, 10°C	150C1F1	9601	51359	124894	9601	51359	-124894
Permanent loads yg= 1.2	150C1F2	9600	48372	119054	9600	48372	-119054
Wind angle: 90°	150C1F3	9599	44597	111695	9599	44597	-111695
	380C2F1	19202	102718	249789	19202	102718	-249789
	380C2F2	19201	96744	238108	19201	96744	-238108
	380C2F3	19198	89193	223389	19198	89193	-223389
	RTG	0	0	0	5204	24844	-62221
NL1/1b	GW / opgw	2603	7482	23171	2603	7482	-23171
Wind, -20°C	150C1F1	9588	25975	83602	9588	25975	-83602
Permanent loads yg= 1.2	150C1F2	9588	25554	83091	9588	25554	-83091
Wind angle: 90°	150C1F3	9588	25037	82504	9588	25037	-82504
	380C2F1	19176	51950	167205	19176	51950	-167205
	380C2F2	19176	51109	166182	19176	51109	-166182
	380C2F3	19176	50074	165008	19176	50074	-165008
	RTG	0	0	0	5198	13456	-44125
NL1/3	GW / opgw	10508	24657	67561	10508	24657	-67561
Wind, -5°C	150C1F1	16537	44488	128742	16537	44488	-128742
Permanent loads yg= 1.2	150C1F2	16536	43215	126952	16536	43215	-126952
Wind angle: 90°	150C1F3	16536	41646	124852	16536	41646	-124852
	380C2F1	33074	88976	257483	33074	88976	-257483
	380C2F2	33073	86430	253903	33073	86430	-253903
	380C2F3	33071	83292	249704	33071	83292	-249704
	RTG	0	0	0	21041	42652	-127924
NL1/4	GW / opgw	3357	8127	25575	3357	8127	-25575
Construction/maintenance, +5°C	150C1F1	11098	26296	84792	11098	26296	-84792
Permanent loads yg= 1.2	150C1F2	11098	25904	84389	11098	25904	-84389
Wind angle: 90°	150C1F3	11098	25421	83929	11098	25421	-83929
	380C2F1	22196	52592	169583	22196	52592	-169583
	380C2F2	22196	51808	168777	22196	51808	-168777
	380C2F3	22196	50841	167858	22196	50841	-167858
	RTG	0	0	0	6706	14974	-49788
NL1/1a	GW / opgw	2606	14633	35485	2604	7637	-22131
Wind, 10°C	150C1F1	9599	43997	110530	9594	25482	-77220
Permanent loads yg= 1.2	150C1F2	9598	41624	105938	9594	24874	-76369
Wind angle: -45°	150C1F3	9597	38645	100228	9594	24126	-75379
	380C2F1	19198	87994	221060	19188	50964	-154440
	380C2F2	19197	83248	211877	19188	49747	-152737
	380C2F3	19195	77290	200456	19187	48252	-150759
	RTG	0	0	0	5201	13215	-41151
NL1/1b	GW / opgw	2603	7082	22611	2603	6158	-21709
Wind, -20°C	150C1F1	9588	24956	82417	9588	22556	-80605
Permanent loads yg= 1.2	150C1F2	9588	24640	82088	9588	22473	-80579
Wind angle: -45°	150C1F3	9588	24250	81713	9588	22369	-80552
	380C2F1	19176	49913	164833	19175	45111	-161209
	380C2F2	19176	49280	164176	19175	44945	-161158
	380C2F3	19176	48501	163427	19175	44738	-161103
	RTG	0	0	0	5198	11952	-42973
NL1/3	GW / opgw	10507	22786	65381	10505	18316	-61805
Wind, -5°C	150C1F1	16536	41401	124536	16534	34178	-117564
Permanent loads yg= 1.2	150C1F2	16535	40441	123335	16534	33935	-117449
Wind angle: -45°	150C1F3	16535	39259	121941	16534	33631	-117322
	380C2F1	33071	82801	249072	33067	68356	-235127
	380C2F2	33071	80882	246669	33067	67869	-234897
	380C2F3	33070	78518	243882	33067	67262	-234645
	RTG	0	0	0	21038	35307	-123393
NL1/4	GW / opgw	3357	7772	25184	3357	6930	-24591
Construction/maintenance, +5°C	150C1F1	11098	25345	83861	11098	23063	-82496
Permanent loads yg= 1.2	150C1F2	11098	25049	83606	11098	22982	-82479
Wind angle: -45°	150C1F3	11098	24682	83318	11098	22881	-82462
	380C2F1	22196	50690	167722	22195	46126	-164991
	380C2F2	22196	50097	167212	22195	45965	-164958
	380C2F3	22196	49363	166635	22195	45762	-164924
	RTG	0	0	0	6705	13583	-49058
NL1//1a	GW / opgw	1953	4605	15480	1953	4605	-15480
Wind, 10°C	150C1F1	7193	16473	56689	7193	16473	-56689
Permanent loads yg= 0.9	150C1F2	7193	16349	56607	7193	16349	-56607
Wind angle: 0°	150C1F3	7193	16195	56515	7193	16195	-56515
	380C2F1	14386	32946	113378	14386	32946	-113378
	380C2F2	14386	32699	113214	14386	32699	-113214
	380C2F3	14386	32391	113030	14386	32391	-113030
	RTG	0	0	0	3900	8786	-30602

NL1/1b	GW / opgw	1952	4673	17097	1952	4673	-17097
Wind, -20°C	150C1F1	7189	17416	64042	7189	17416	-64042
Permanent loads yg= 0.9	150C1F2	7189	17396	64042	7189	17396	-64042
Wind angle: 0°	150C1F3	7189	17371	64043	7189	17371	-64043
	380C2F1	14378	34833	128083	14378	34833	-128083
	380C2F2	14378	34792	128084	14378	34792	-128084
	380C2F3	14378	34741	128086	14378	34741	-128086
	RTG	0	0	0	3898	9193	-33873
NL1/3	GW / opgw	9851	16193	58677	9851	16193	-58677
Wind, -5°C	150C1F1	14132	28443	103476	14132	28443	-103476
Permanent loads yg= 0.9	150C1F2	14131	28386	103475	14131	28386	-103475
Wind angle: 0°	150C1F3	14131	28314	103476	14131	28314	-103476
	380C2F1	28263	56887	206952	28263	56887	-206952
	380C2F2	28263	56773	206951	28263	56773	-206951
	380C2F3	28263	56629	206952	28263	56629	-206952
	RTG	0	0	0	19733	32098	-117547
NL1/4	GW / opgw	2705	5587	20508	2705	5587	-20508
Construction/maintenance, +5°C	150C1F1	8697	18309	67373	8697	18309	-67373
Permanent loads yg= 0.9	150C1F2	8697	18289	67374	8697	18289	-67374
Wind angle: 0°	150C1F3	8697	18264	67377	8697	18264	-67377
	380C2F1	17395	36618	134746	17395	36618	-134746
	380C2F2	17395	36578	134749	17395	36578	-134749
	380C2F3	17395	36528	134754	17395	36528	-134754
	RTG	0	0	0	5404	11090	-40949
NL1/6	GW / opgw	1953	4089	15259	1953	4089	-15259
Permanent, +10°C	150C1F1	7193	15085	56299	7193	15085	-56299
Permanent loads yg= 0.9	150C1F2	7193	15085	56299	7193	15085	-56299
	150C1F3	7193	15085	56299	7193	15085	-56299
	380C2F1	14386	30170	112597	14386	30170	-112597
	380C2F2	14386	30170	112597	14386	30170	-112597
	380C2F3	14386	30170	112597	14386	30170	-112597
	RTG	0	0	0	3899	8164	-30469
NL1/1a	GW / opgw	1953	6750	18822	1954	14246	-34043
Wind, 10°C	150C1F1	7194	21953	64052	7199	42181	-103756
Permanent loads yg= 0.9	150C1F2	7194	21263	62897	7198	39666	-98634
Wind angle: 45°	150C1F3	7194	20416	61536	7197	36482	-92163
	380C2F1	14388	43905	128103	14397	84361	-207513
	380C2F2	14388	42526	125795	14396	79331	-197269
	380C2F3	14388	40832	123073	14394	72965	-184327
	RTG	0	0	0	3902	20286	-51200
NL1/1b	GW / opgw	1952	4955	17220	1952	5991	-18541
Wind, -20°C	150C1F1	7189	18176	64260	7189	20832	-67026
Permanent loads yg= 0.9	150C1F2	7189	18088	64215	7189	20475	-66544
Wind angle: 45°	150C1F3	7189	17978	64165	7189	20036	-65988
	380C2F1	14378	36352	128520	14379	41664	-134053
	380C2F2	14378	36175	128429	14379	40949	-133089
	380C2F3	14378	35956	128329	14378	40073	-131977
	RTG	0	0	0	3898	10693	-35011
NL1/3	GW / opgw	9851	17553	58958	9854	22115	-62877
Wind, -5°C	150C1F1	14132	30608	104242	14134	38265	-112838
Permanent loads yg= 0.9	150C1F2	14132	30355	104091	14134	37240	-111394
Wind angle: 45°	150C1F3	14132	30040	103922	14133	35979	-109705
	380C2F1	28264	61216	208485	28268	76530	-225675
	380C2F2	28263	60710	208182	28267	74481	-222787
	380C2F3	28263	60080	207844	28266	71958	-219410
	RTG	0	0	0	19735	39055	-120636
NL1/4	GW / opgw	2705	5852	20564	2705	6753	-21379
Construction/maintenance, +5°C	150C1F1	8697	19043	67493	8698	21493	-69486
Permanent loads yg= 0.9	150C1F2	8697	18959	67464	8698	21169	-69128
Wind angle: 45°	150C1F3	8697	18854	67432	8698	20770	-68719
	380C2F1	17395	38085	134986	17395	42985	-138971
	380C2F2	17395	37917	134927	17395	42337	-138256
	380C2F3	17395	37708	134864	17395	41539	-137438
	RTG	0	0	0	5404	12455	-41581
NL1/1a	GW / opgw	1955	16998	39638	1955	16998	-39638
Wind, 10°C	150C1F1	7200	49895	119434	7200	49895	-119434
Permanent loads yg= 0.9	150C1F2	7200	46779	113114	7200	46779	-113114
Wind angle: 90°	150C1F3	7199	42814	105045	7199	42814	-105045
	380C2F1	14401	99789	238869	14401	99789	-238869
	380C2F2	14399	93558	226228	14399	93558	-226228
	380C2F3	14397	85627	210091	14397	85627	-210091
	RTG	0	0	0	3902	23873	-58602

NL1/1b	GW / opgw	1952	6448	19313	1952	6448	-19313
Wind, -20°C	150C1F1	7190	21990	68732	7190	21990	-68732
Permanent loads yg= 0.9	150C1F2	7189	21511	68003	7189	21511	-68003
Wind angle: 90°	150C1F3	7189	20923	67153	7189	20923	-67153
	380C2F1	14379	43980	137465	14379	43980	-137465
	380C2F2	14379	43021	136005	14379	43021	-136005
	380C2F3	14379	41847	134307	14379	41847	-134307
	RTG	0	0	0	3898	11195	-35688
NL1/3	GW / opgw	9855	24029	65223	9855	24029	-65223
Wind, -5°C	150C1F1	14135	41560	117821	14135	41560	-117821
Permanent loads yg= 0.9	150C1F2	14134	40202	115712	14134	40202	-115712
Wind angle: 90°	150C1F3	14134	38527	113216	14134	38527	-113216
	380C2F1	28270	83121	235642	28270	83121	-235642
	380C2F2	28269	80404	231424	28269	80404	-231424
	380C2F3	28268	77053	226431	28268	77053	-226431
	RTG	0	0	0	19736	41238	-122651
NL1/4	GW / opgw	2705	7140	21892	2705	7140	-21892
Construction/maintenance, +5°C	150C1F1	8698	22538	70770	8698	22538	-70770
Permanent loads yg= 0.9	150C1F2	8698	22106	70218	8698	22106	-70218
Wind angle: 90°	150C1F3	8698	21575	69580	8698	21575	-69580
	380C2F1	17396	45076	141541	17396	45076	-141541
	380C2F2	17396	44212	140435	17396	44212	-140435
	380C2F3	17395	43151	139161	17395	43151	-139161
	RTG	0	0	0	5404	12888	-42002
NL1/1a	GW / opgw	1954	14246	34043	1953	6750	-18822
Wind, 10°C	150C1F1	7199	42181	103756	7194	21953	-64052
Permanent loads yg= 0.9	150C1F2	7198	39666	98634	7194	21263	-62897
Wind angle: -45°	150C1F3	7197	36482	92163	7194	20416	-61536
	380C2F1	14397	84361	207513	14388	43905	-128103
	380C2F2	14396	79331	197269	14388	42526	-125795
	380C2F3	14394	72965	184327	14388	40832	-123073
	RTG	0	0	0	3900	11173	-33533
NL1/1b	GW / opgw	1952	5991	18541	1952	4955	-17220
Wind, -20°C	150C1F1	7189	20832	67026	7189	18176	-64260
Permanent loads yg= 0.9	150C1F2	7189	20475	66544	7189	18088	-64215
Wind angle: -45°	150C1F3	7189	20036	65988	7189	17978	-64165
	380C2F1	14379	41664	134053	14378	36352	-128520
	380C2F2	14379	40949	133089	14378	36175	-128429
	380C2F3	14378	40073	131977	14378	35956	-128329
	RTG	0	0	0	3898	9533	-33947
NL1/3	GW / opgw	9854	22115	62877	9851	17553	-58958
Wind, -5°C	150C1F1	14134	38265	112838	14132	30608	-104242
Permanent loads yg= 0.9	150C1F2	14134	37240	111394	14132	30355	-104091
Wind angle: -45°	150C1F3	14133	35979	109705	14132	30040	-103922
	380C2F1	28268	76530	225675	28264	61216	-208485
	380C2F2	28267	74481	222787	28263	60710	-208182
	380C2F3	28266	71958	219410	28263	60080	-207844
	RTG	0	0	0	19733	33763	-117632
NL1/4	GW / opgw	2705	6753	21379	2705	5852	-20564
Construction/maintenance, +5°C	150C1F1	8698	21493	69486	8697	19043	-67493
Permanent loads yg= 0.9	150C1F2	8698	21169	69128	8697	18959	-67464
Wind angle: -45°	150C1F3	8698	20770	68719	8697	18854	-67432
	380C2F1	17395	42985	138971	17395	38085	-134986
	380C2F2	17395	42337	138256	17395	37917	-134927
	380C2F3	17395	41539	137438	17395	37708	-134864
	RTG	0	0	0	5404	11415	-40968

ZWW4HK450

Loadcases for tower strength (Special limit state)

		Ahead			Back		
Loadcase according to 50341-3-15	Att. Point	Vertical [N]	Transversal [N]	Longitudinal [N]	Vertical [N]	Transversal [N]	Longitudinal [N]
NL3/1a	GW / opgw	0	0	0	2604	5480	-19563
Wind, 10°C	150C1F1	0	0	0	9593	19914	-71831
Permanent loads yg= 1.2	150C1F2	0	0	0	9593	19859	-71823
Wind angle: 0°	150C1F3	0	0	0	9593	19790	-71816
	380C2F1	0	0	0	19186	39829	-143662
	380C2F2	0	0	0	19186	39719	-143647
	380C2F3	0	0	0	19186	39581	-143633
	RTG	0	0	0	5200	10767	-39047
NL3/1b	GW / opgw	0	0	0	2603	5872	-21643
Wind, -20°C	150C1F1	0	0	0	9588	21778	-80512
Permanent loads yg= 1.2	150C1F2	0	0	0	9588	21763	-80514
Wind angle: 0°	150C1F3	0	0	0	9588	21743	-80517
	380C2F1	0	0	0	19175	43557	-161025
	380C2F2	0	0	0	19175	43525	-161029
	380C2F3	0	0	0	19175	43486	-161034
	RTG	0	0	0	5198	11602	-42948
NL3/3	GW / opgw	0	0	0	4371	8769	-31323
Wind, -5°C	150C1F1	0	0	0	11145	23525	-85655
Permanent loads yg= 1.2	150C1F2	0	0	0	11145	23479	-85654
Wind angle: 0°	150C1F3	0	0	0	11145	23421	-85653
	380C2F1	0	0	0	22290	47050	-171311
	380C2F2	0	0	0	22290	46958	-171308
	380C2F3	0	0	0	22290	46842	-171307
	RTG	0	0	0	8742	17230	-62511
NL3/4	GW / opgw	0	0	0	3206	6409	-23646
Construction/maintenance, +5°C	150C1F1	0	0	0	10796	21807	-80617
Permanent loads yg= 1.2	150C1F2	0	0	0	10796	21791	-80620
Wind angle: 0°	150C1F3	0	0	0	10796	21771	-80623
	380C2F1	0	0	0	21593	43613	-161235
	380C2F2	0	0	0	21593	43582	-161239
	380C2F3	0	0	0	21593	43542	-161246
	RTG	0	0	0	6404	12748	-47227
NL3/1a	GW / opgw	0	0	0	2605	9462	-25373
Wind, 10°C	150C1F1	0	0	0	9595	30173	-84712
Permanent loads yg= 1.2	150C1F2	0	0	0	9595	29084	-82861
Wind angle: 45°	150C1F3	0	0	0	9594	27741	-80659
	380C2F1	0	0	0	19190	60346	-169423
	380C2F2	0	0	0	19190	58168	-165723
	380C2F3	0	0	0	19189	55482	-161318
	RTG	0	0	0	5201	15268	-44237
NL3/1b	GW / opgw	0	0	0	2603	6777	-22237
Wind, -20°C	150C1F1	0	0	0	9588	24175	-81645
Permanent loads yg= 1.2	150C1F2	0	0	0	9588	23938	-81440
Wind angle: 45°	150C1F3	0	0	0	9588	23644	-81208
	380C2F1	0	0	0	19176	48350	-163290
	380C2F2	0	0	0	19176	47875	-162880
	380C2F3	0	0	0	19176	47288	-162415
	RTG	0	0	0	5198	12669	-43363
NL3/3	GW / opgw	0	0	0	4373	14660	-39007
Wind, -5°C	150C1F1	0	0	0	11146	31579	-93885
Permanent loads yg= 1.2	150C1F2	0	0	0	11146	30731	-92625
Wind angle: 45°	150C1F3	0	0	0	11146	29689	-91151
	380C2F1	0	0	0	22293	63157	-187769
	380C2F2	0	0	0	22293	61462	-185250
	380C2F3	0	0	0	22292	59378	-182301
	RTG	0	0	0	8744	23926	-69220
NL3/4	GW / opgw	0	0	0	3206	7262	-24043
Construction/maintenance, +5°C	150C1F1	0	0	0	10797	24129	-81469
Permanent loads yg= 1.2	150C1F2	0	0	0	10797	23903	-81305
Wind angle: 45°	150C1F3	0	0	0	10797	23622	-81122
	380C2F1	0	0	0	21593	48258	-162938
	380C2F2	0	0	0	21593	47805	-162611
	380C2F3	0	0	0	21593	47244	-162244
	RTG	0	0	0	6404	13771	-47474
NL3/1a	GW / opgw	0	0	0	2605	10793	-27912
Wind, 10°C	150C1F1	0	0	0	9596	33659	-90909
Permanent loads yg= 1.2	150C1F2	0	0	0	9596	32226	-88319
Wind angle: 90°	150C1F3	0	0	0	9595	30451	-85191
	380C2F1	0	0	0	19192	67317	-181817
	380C2F2	0	0	0	19191	64452	-176637
	380C2F3	0	0	0	19190	60902	-170383
	RTG	0	0	0	5201	16808	-46877

NL3/1b	GW / opgw	0	0	0	2603	7075	-22601
Wind, -20°C	150C1F1	0	0	0	9588	24937	-82396
Permanent loads yg= 1.2	150C1F2	0	0	0	9588	24623	-82071
Wind angle: 90°	150C1F3	0	0	0	9588	24236	-81700
	380C2F1	0	0	0	19176	49874	-164792
	380C2F2	0	0	0	19176	49246	-164141
	380C2F3	0	0	0	19176	48471	-163400
	RTG	0	0	0	5198	13003	-43653
NL3/3	GW / opgw	0	0	0	4373	16605	-42427
Wind, -5°C	150C1F1	0	0	0	11147	34309	-98225
Permanent loads yg= 1.2	150C1F2	0	0	0	11147	33183	-96390
Wind angle: 90°	150C1F3	0	0	0	11147	31795	-94214
	380C2F1	0	0	0	22295	68618	-196450
	380C2F2	0	0	0	22294	66366	-192779
	380C2F3	0	0	0	22293	63590	-188429
	RTG	0	0	0	8745	26174	-72712
NL3/4	GW / opgw	0	0	0	3206	7532	-24307
Construction/maintenance, +5°C	150C1F1	0	0	0	10797	24852	-82073
Permanent loads yg= 1.2	150C1F2	0	0	0	10797	24555	-81810
Wind angle: 90°	150C1F3	0	0	0	10797	24187	-81513
	380C2F1	0	0	0	21594	49704	-164145
	380C2F2	0	0	0	21594	49109	-163620
	380C2F3	0	0	0	21593	48373	-163025
	RTG	0	0	0	6404	14081	-47676
NL3/1a	GW / opgw	0	0	0	2604	6303	-20211
Wind, 10°C	150C1F1	0	0	0	9593	22078	-73098
Permanent loads yg= 1.2	150C1F2	0	0	0	9593	21818	-72869
Wind angle: -45°	150C1F3	0	0	0	9593	21498	-72609
	380C2F1	0	0	0	19187	44156	-146196
	380C2F2	0	0	0	19186	43637	-145737
	380C2F3	0	0	0	19186	42996	-145217
	RTG	0	0	0	5200	11727	-39521
NL3/1b	GW / opgw	0	0	0	2603	6081	-21676
Wind, -20°C	150C1F1	0	0	0	9588	22349	-80547
Permanent loads yg= 1.2	150C1F2	0	0	0	9588	22284	-80533
Wind angle: -45°	150C1F3	0	0	0	9588	22203	-80520
	380C2F1	0	0	0	19175	44697	-161094
	380C2F2	0	0	0	19175	44568	-161067
	380C2F3	0	0	0	19175	44407	-161040
	RTG	0	0	0	5198	11859	-42953
NL3/3	GW / opgw	0	0	0	4371	10016	-32147
Wind, -5°C	150C1F1	0	0	0	11145	25279	-86353
Permanent loads yg= 1.2	150C1F2	0	0	0	11145	25073	-86218
Wind angle: -45°	150C1F3	0	0	0	11145	24817	-86067
	380C2F1	0	0	0	22290	50557	-172706
	380C2F2	0	0	0	22290	50145	-172436
	380C2F3	0	0	0	22290	49633	-172134
	RTG	0	0	0	8742	18696	-63083
NL3/4	GW / opgw	0	0	0	3206	6612	-23658
Construction/maintenance, +5°C	150C1F1	0	0	0	10797	22369	-80622
Permanent loads yg= 1.2	150C1F2	0	0	0	10797	22306	-80613
Wind angle: -45°	150C1F3	0	0	0	10797	22227	-80605
	380C2F1	0	0	0	21593	44738	-161243
	380C2F2	0	0	0	21593	44612	-161226
	380C2F3	0	0	0	21593	44453	-161210
	RTG	0	0	0	6404	13001	-47213
NL3/1a	GW / opgw	0	0	0	1953	4335	-15291
Wind, 10°C	150C1F1	0	0	0	7193	15760	-56325
Permanent loads yg= 0.9	150C1F2	0	0	0	7193	15702	-56309
Wind angle: 0°	150C1F3	0	0	0	7193	15631	-56292
	380C2F1	0	0	0	14386	31519	-112651
	380C2F2	0	0	0	14386	31405	-112618
	380C2F3	0	0	0	14386	31261	-112584
	RTG	0	0	0	3899	8469	-30469
NL3/1b	GW / opgw	0	0	0	1952	4654	-17096
Wind, -20°C	150C1F1	0	0	0	7189	17366	-64043
Permanent loads yg= 0.9	150C1F2	0	0	0	7189	17350	-64044
Wind angle: 0°	150C1F3	0	0	0	7189	17329	-64046
	380C2F1	0	0	0	14378	34731	-128087
	380C2F2	0	0	0	14378	34699	-128089
	380C2F3	0	0	0	14378	34659	-128092
	RTG	0	0	0	3898	9170	-33875

NL3/3	GW / opgw	0	0	0	3719	7753	-27532
Wind, -5°C	150C1F1	0	0	0	8745	19427	-70362
Permanent loads yg= 0.9	150C1F2	0	0	0	8745	19380	-70356
Wind angle: 0°	150C1F3	0	0	0	8745	19320	-70350
	380C2F1	0	0	0	17490	38854	-140725
	380C2F2	0	0	0	17490	38759	-140712
	380C2F3	0	0	0	17490	38641	-140701
	RTG	0	0	0	7440	15192	-54906
NL3/4	GW / opgw	0	0	0	2554	5309	-19540
Construction/maintenance, +5°C	150C1F1	0	0	0	8396	17734	-65417
Permanent loads yg= 0.9	150C1F2	0	0	0	8396	17718	-65418
Wind angle: 0°	150C1F3	0	0	0	8396	17698	-65421
	380C2F1	0	0	0	16793	35467	-130833
	380C2F2	0	0	0	16793	35436	-130837
	380C2F3	0	0	0	16793	35396	-130841
	RTG	0	0	0	5103	10547	-39011
NL3/1a	GW / opgw	0	0	0	1953	8771	-22794
Wind, 10°C	150C1F1	0	0	0	7195	27228	-73726
Permanent loads yg= 0.9	150C1F2	0	0	0	7195	26012	-71402
Wind angle: 45°	150C1F3	0	0	0	7195	24505	-68586
	380C2F1	0	0	0	14390	54457	-147451
	380C2F2	0	0	0	14390	52025	-142805
	380C2F3	0	0	0	14389	49010	-137172
	RTG	0	0	0	3900	13493	-37618
NL3/1b	GW / opgw	0	0	0	1952	5645	-18010
Wind, -20°C	150C1F1	0	0	0	7189	19952	-65886
Permanent loads yg= 0.9	150C1F2	0	0	0	7189	19687	-65577
Wind angle: 45°	150C1F3	0	0	0	7189	19360	-65223
	380C2F1	0	0	0	14378	39904	-131772
	380C2F2	0	0	0	14378	39373	-131154
	380C2F3	0	0	0	14378	38721	-130446
	RTG	0	0	0	3898	10312	-34566
NL3/3	GW / opgw	0	0	0	3721	14009	-36576
Wind, -5°C	150C1F1	0	0	0	8747	28254	-81482
Permanent loads yg= 0.9	150C1F2	0	0	0	8746	27312	-79870
Wind angle: 45°	150C1F3	0	0	0	8746	26153	-77956
	380C2F1	0	0	0	17493	56508	-162964
	380C2F2	0	0	0	17493	54624	-159739
	380C2F3	0	0	0	17492	52305	-155912
	RTG	0	0	0	7442	22289	-63115
NL3/4	GW / opgw	0	0	0	2554	6210	-20120
Construction/maintenance, +5°C	150C1F1	0	0	0	8397	20188	-66761
Permanent loads yg= 0.9	150C1F2	0	0	0	8397	19942	-66524
Wind angle: 45°	150C1F3	0	0	0	8396	19638	-66256
	380C2F1	0	0	0	16793	40375	-133522
	380C2F2	0	0	0	16793	39883	-133049
	380C2F3	0	0	0	16793	39276	-132512
	RTG	0	0	0	5103	11611	-39414
NL3/1a	GW / opgw	0	0	0	1954	10208	-25731
Wind, 10°C	150C1F1	0	0	0	7196	31077	-81279
Permanent loads yg= 0.9	150C1F2	0	0	0	7196	29503	-78160
Wind angle: 90°	150C1F3	0	0	0	7195	27538	-74322
	380C2F1	0	0	0	14392	62154	-162559
	380C2F2	0	0	0	14391	59006	-156320
	380C2F3	0	0	0	14390	55075	-148645
	RTG	0	0	0	3901	15214	-40930
NL3/1b	GW / opgw	0	0	0	1952	5983	-18527
Wind, -20°C	150C1F1	0	0	0	7189	20810	-66996
Permanent loads yg= 0.9	150C1F2	0	0	0	7189	20455	-66519
Wind angle: 90°	150C1F3	0	0	0	7189	20020	-65968
	380C2F1	0	0	0	14379	41620	-133992
	380C2F2	0	0	0	14379	40910	-133037
	380C2F3	0	0	0	14378	40039	-131936
	RTG	0	0	0	3898	10684	-34999
NL3/3	GW / opgw	0	0	0	3721	16048	-40351
Wind, -5°C	150C1F1	0	0	0	8747	31276	-86909
Permanent loads yg= 0.9	150C1F2	0	0	0	8747	30032	-84636
Wind angle: 90°	150C1F3	0	0	0	8747	28495	-81901
	380C2F1	0	0	0	17495	62552	-173818
	380C2F2	0	0	0	17494	60065	-169273
	380C2F3	0	0	0	17493	56989	-163802
	RTG	0	0	0	7443	24686	-67163

NL3/4	GW / opgw	0	0	0	2554	6506	-20476
Construction/maintenance, +5°C	150C1F1	0	0	0	8397	20979	-67619
Permanent loads yg= 0.9	150C1F2	0	0	0	8397	20652	-67249
Wind angle: 90°	150C1F3	0	0	0	8397	20250	-66824
	380C2F1	0	0	0	16793	41957	-135239
	380C2F2	0	0	0	16793	41304	-134497
	380C2F3	0	0	0	16793	40501	-133648
	RTG	0	0	0	5103	11944	-39698
NL3/1a	GW / opgw	0	0	0	1953	5242	-16253
Wind, 10°C	150C1F1	0	0	0	7193	18110	-58292
Permanent loads yg= 0.9	150C1F2	0	0	0	7193	17821	-57953
Wind angle: -45°	150C1F3	0	0	0	7193	17467	-57565
	380C2F1	0	0	0	14387	36220	-116583
	380C2F2	0	0	0	14387	35643	-115906
	380C2F3	0	0	0	14387	34933	-115130
	RTG	0	0	0	3900	9503	-31218
NL3/1b	GW / opgw	0	0	0	1952	4872	-17166
Wind, -20°C	150C1F1	0	0	0	7189	17956	-64156
Permanent loads yg= 0.9	150C1F2	0	0	0	7189	17889	-64130
Wind angle: -45°	150C1F3	0	0	0	7189	17804	-64101
	380C2F1	0	0	0	14378	35913	-128311
	380C2F2	0	0	0	14378	35777	-128259
	380C2F3	0	0	0	14378	35608	-128202
	RTG	0	0	0	3898	9436	-33909
NL3/3	GW / opgw	0	0	0	3719	9062	-28588
Wind, -5°C	150C1F1	0	0	0	8745	21283	-71442
Permanent loads yg= 0.9	150C1F2	0	0	0	8745	21060	-71246
Wind angle: -45°	150C1F3	0	0	0	8745	20785	-71024
	380C2F1	0	0	0	17490	42566	-142884
	380C2F2	0	0	0	17490	42121	-142492
	380C2F3	0	0	0	17490	41571	-142048
	RTG	0	0	0	7441	16711	-55679
NL3/4	GW / opgw	0	0	0	2554	5517	-19572
Construction/maintenance, +5°C	150C1F1	0	0	0	8396	18310	-65474
Permanent loads yg= 0.9	150C1F2	0	0	0	8396	18245	-65457
Wind angle: -45°	150C1F3	0	0	0	8396	18163	-65439
	380C2F1	0	0	0	16793	36620	-130948
	380C2F2	0	0	0	16793	36489	-130914
	380C2F3	0	0	0	16793	36325	-130878
	RTG	0	0	0	5103	10804	-39014

ZWW4HK450

Loadcases for tower strength (Special limit state)

		Ahead			Back		
Loadcase according to 50341-3-15	Att. Point	Vertical [N]	Transversal [N]	Longitudinal [N]	Vertical [N]	Transversal [N]	Longitudinal [N]
NL3/1a	GW / opgw	2604	5480	19563	0	0	0
Wind, 10°C	150C1F1	9593	19914	71831	0	0	0
Permanent loads yg= 1.2	150C1F2	9593	19859	71823	0	0	0
Wind angle: 0°	150C1F3	9593	19790	71816	0	0	0
	380C2F1	19186	39829	143662	0	0	0
	380C2F2	19186	39719	143647	0	0	0
	380C2F3	19186	39581	143633	0	0	0
	RTG	0	0	0	0	0	0
NL3/1b	GW / opgw	2603	5872	21643	0	0	0
Wind, -20°C	150C1F1	9588	21778	80512	0	0	0
Permanent loads yg= 1.2	150C1F2	9588	21763	80514	0	0	0
Wind angle: 0°	150C1F3	9588	21743	80517	0	0	0
	380C2F1	19175	43557	161025	0	0	0
	380C2F2	19175	43525	161029	0	0	0
	380C2F3	19175	43486	161034	0	0	0
	RTG	0	0	0	0	0	0
NL3/3	GW / opgw	4371	8769	31323	0	0	0
Wind, -5°C	150C1F1	11145	23525	85655	0	0	0
Permanent loads yg= 1.2	150C1F2	11145	23479	85654	0	0	0
Wind angle: 0°	150C1F3	11145	23421	85653	0	0	0
	380C2F1	22290	47050	171311	0	0	0
	380C2F2	22290	46958	171308	0	0	0
	380C2F3	22290	46842	171307	0	0	0
	RTG	0	0	0	0	0	0
NL3/4	GW / opgw	3206	6409	23646	0	0	0
Construction/maintenance, +5°C	150C1F1	10796	21807	80617	0	0	0
Permanent loads yg= 1.2	150C1F2	10796	21791	80620	0	0	0
Wind angle: 0°	150C1F3	10796	21771	80623	0	0	0
	380C2F1	21593	43613	161235	0	0	0
	380C2F2	21593	43582	161239	0	0	0
	380C2F3	21593	43542	161246	0	0	0
	RTG	0	0	0	0	0	0
NL3/1a	GW / opgw	2604	6303	20211	0	0	0
Wind, 10°C	150C1F1	9593	22078	73098	0	0	0
Permanent loads yg= 1.2	150C1F2	9593	21818	72869	0	0	0
Wind angle: 45°	150C1F3	9593	21498	72609	0	0	0
	380C2F1	19187	44156	146196	0	0	0
	380C2F2	19186	43637	145737	0	0	0
	380C2F3	19186	42996	145217	0	0	0
	RTG	0	0	0	0	0	0
NL3/1b	GW / opgw	2603	6081	21676	0	0	0
Wind, -20°C	150C1F1	9588	22349	80547	0	0	0
Permanent loads yg= 1.2	150C1F2	9588	22284	80533	0	0	0
Wind angle: 45°	150C1F3	9588	22203	80520	0	0	0
	380C2F1	19175	44697	161094	0	0	0
	380C2F2	19175	44568	161067	0	0	0
	380C2F3	19175	44407	161040	0	0	0
	RTG	0	0	0	0	0	0
NL3/3	GW / opgw	4371	10016	32147	0	0	0
Wind, -5°C	150C1F1	11145	25279	86353	0	0	0
Permanent loads yg= 1.2	150C1F2	11145	25073	86218	0	0	0
Wind angle: 45°	150C1F3	11145	24817	86067	0	0	0
	380C2F1	22290	50557	172706	0	0	0
	380C2F2	22290	50145	172436	0	0	0
	380C2F3	22290	49633	172134	0	0	0
	RTG	0	0	0	0	0	0
NL3/4	GW / opgw	3206	6612	23658	0	0	0
Construction/maintenance, +5°C	150C1F1	10797	22369	80622	0	0	0
Permanent loads yg= 1.2	150C1F2	10797	22306	80613	0	0	0
Wind angle: 45°	150C1F3	10797	22227	80605	0	0	0
	380C2F1	21593	44738	161243	0	0	0
	380C2F2	21593	44612	161226	0	0	0
	380C2F3	21593	44453	161210	0	0	0
	RTG	0	0	0	0	0	0
NL3/1a	GW / opgw	2605	10793	27912	0	0	0
Wind, 10°C	150C1F1	9596	33659	90909	0	0	0
Permanent loads yg= 1.2	150C1F2	9596	32226	88319	0	0	0
Wind angle: 90°	150C1F3	9595	30451	85191	0	0	0
	380C2F1	19192	67317	181817	0	0	0
	380C2F2	19191	64452	176637	0	0	0
	380C2F3	19190	60902	170383	0	0	0
	RTG	0	0	0	0	0	0

NL3/1b	GW / opgw	2603	7075	22601	0	0	0
Wind, -20°C	150C1F1	9588	24937	82396	0	0	0
Permanent loads yg= 1.2	150C1F2	9588	24623	82071	0	0	0
Wind angle: 90°	150C1F3	9588	24236	81700	0	0	0
	380C2F1	19176	49874	164792	0	0	0
	380C2F2	19176	49246	164141	0	0	0
	380C2F3	19176	48471	163400	0	0	0
	RTG	0	0	0	0	0	0
NL3/3	GW / opgw	4373	16605	42427	0	0	0
Wind, -5°C	150C1F1	11147	34309	98225	0	0	0
Permanent loads yg= 1.2	150C1F2	11147	33183	96390	0	0	0
Wind angle: 90°	150C1F3	11147	31795	94214	0	0	0
	380C2F1	22295	68618	196450	0	0	0
	380C2F2	22294	66366	192779	0	0	0
	380C2F3	22293	63590	188429	0	0	0
	RTG	0	0	0	0	0	0
NL3/4	GW / opgw	3206	7532	24307	0	0	0
Construction/maintenance, +5°C	150C1F1	10797	24852	82073	0	0	0
Permanent loads yg= 1.2	150C1F2	10797	24555	81810	0	0	0
Wind angle: 90°	150C1F3	10797	24187	81513	0	0	0
	380C2F1	21594	49704	164145	0	0	0
	380C2F2	21594	49109	163620	0	0	0
	380C2F3	21593	48373	163025	0	0	0
	RTG	0	0	0	0	0	0
NL3/1a	GW / opgw	2605	9462	25373	0	0	0
Wind, 10°C	150C1F1	9595	30173	84712	0	0	0
Permanent loads yg= 1.2	150C1F2	9595	29084	82861	0	0	0
Wind angle: -45°	150C1F3	9594	27741	80659	0	0	0
	380C2F1	19190	60346	169423	0	0	0
	380C2F2	19190	58168	165723	0	0	0
	380C2F3	19189	55482	161318	0	0	0
	RTG	0	0	0	0	0	0
NL3/1b	GW / opgw	2603	6777	22237	0	0	0
Wind, -20°C	150C1F1	9588	24175	81645	0	0	0
Permanent loads yg= 1.2	150C1F2	9588	23938	81440	0	0	0
Wind angle: -45°	150C1F3	9588	23644	81208	0	0	0
	380C2F1	19176	48350	163290	0	0	0
	380C2F2	19176	47875	162880	0	0	0
	380C2F3	19176	47288	162415	0	0	0
	RTG	0	0	0	0	0	0
NL3/3	GW / opgw	4373	14660	39007	0	0	0
Wind, -5°C	150C1F1	11146	31579	93885	0	0	0
Permanent loads yg= 1.2	150C1F2	11146	30731	92625	0	0	0
Wind angle: -45°	150C1F3	11146	29689	91151	0	0	0
	380C2F1	22293	63157	187769	0	0	0
	380C2F2	22293	61462	185250	0	0	0
	380C2F3	22292	59378	182301	0	0	0
	RTG	0	0	0	0	0	0
NL3/4	GW / opgw	3206	7262	24043	0	0	0
Construction/maintenance, +5°C	150C1F1	10797	24129	81469	0	0	0
Permanent loads yg= 1.2	150C1F2	10797	23903	81305	0	0	0
Wind angle: -45°	150C1F3	10797	23622	81122	0	0	0
	380C2F1	21593	48258	162938	0	0	0
	380C2F2	21593	47805	162611	0	0	0
	380C2F3	21593	47244	162244	0	0	0
	RTG	0	0	0	0	0	0
NL3/1a	GW / opgw	1953	4335	15291	0	0	0
Wind, 10°C	150C1F1	7193	15760	56325	0	0	0
Permanent loads yg= 0.9	150C1F2	7193	15702	56309	0	0	0
Wind angle: 0°	150C1F3	7193	15631	56292	0	0	0
	380C2F1	14386	31519	112651	0	0	0
	380C2F2	14386	31405	112618	0	0	0
	380C2F3	14386	31261	112584	0	0	0
	RTG	0	0	0	0	0	0
NL3/1b	GW / opgw	1952	4654	17096	0	0	0
Wind, -20°C	150C1F1	7189	17366	64043	0	0	0
Permanent loads yg= 0.9	150C1F2	7189	17350	64044	0	0	0
Wind angle: 0°	150C1F3	7189	17329	64046	0	0	0
	380C2F1	14378	34731	128087	0	0	0
	380C2F2	14378	34699	128089	0	0	0
	380C2F3	14378	34659	128092	0	0	0
	RTG	0	0	0	0	0	0

NL3/3	GW / opgw	3719	7753	27532	0	0	0
Wind, -5°C	150C1F1	8745	19427	70362	0	0	0
Permanent loads yg= 0.9	150C1F2	8745	19380	70356	0	0	0
Wind angle: 0°	150C1F3	8745	19320	70350	0	0	0
	380C2F1	17490	38854	140725	0	0	0
	380C2F2	17490	38759	140712	0	0	0
	380C2F3	17490	38641	140701	0	0	0
	RTG	0	0	0	0	0	0
NL3/4	GW / opgw	2554	5309	19540	0	0	0
Construction/maintenance, +5°C	150C1F1	8396	17734	65417	0	0	0
Permanent loads yg= 0.9	150C1F2	8396	17718	65418	0	0	0
Wind angle: 0°	150C1F3	8396	17698	65421	0	0	0
	380C2F1	16793	35467	130833	0	0	0
	380C2F2	16793	35436	130837	0	0	0
	380C2F3	16793	35396	130841	0	0	0
	RTG	0	0	0	0	0	0
NL3/1a	GW / opgw	1953	5242	16253	0	0	0
Wind, 10°C	150C1F1	7193	18110	58292	0	0	0
Permanent loads yg= 0.9	150C1F2	7193	17821	57953	0	0	0
Wind angle: 45°	150C1F3	7193	17467	57565	0	0	0
	380C2F1	14387	36220	116583	0	0	0
	380C2F2	14387	35643	115906	0	0	0
	380C2F3	14387	34933	115130	0	0	0
	RTG	0	0	0	0	0	0
NL3/1b	GW / opgw	1952	4872	17166	0	0	0
Wind, -20°C	150C1F1	7189	17956	64156	0	0	0
Permanent loads yg= 0.9	150C1F2	7189	17889	64130	0	0	0
Wind angle: 45°	150C1F3	7189	17804	64101	0	0	0
	380C2F1	14378	35913	128311	0	0	0
	380C2F2	14378	35777	128259	0	0	0
	380C2F3	14378	35608	128202	0	0	0
	RTG	0	0	0	0	0	0
NL3/3	GW / opgw	3719	9062	28588	0	0	0
Wind, -5°C	150C1F1	8745	21283	71442	0	0	0
Permanent loads yg= 0.9	150C1F2	8745	21060	71246	0	0	0
Wind angle: 45°	150C1F3	8745	20785	71024	0	0	0
	380C2F1	17490	42566	142884	0	0	0
	380C2F2	17490	42121	142492	0	0	0
	380C2F3	17490	41571	142048	0	0	0
	RTG	0	0	0	0	0	0
NL3/4	GW / opgw	2554	5517	19572	0	0	0
Construction/maintenance, +5°C	150C1F1	8396	18310	65474	0	0	0
Permanent loads yg= 0.9	150C1F2	8396	18245	65457	0	0	0
Wind angle: 45°	150C1F3	8396	18163	65439	0	0	0
	380C2F1	16793	36620	130948	0	0	0
	380C2F2	16793	36489	130914	0	0	0
	380C2F3	16793	36325	130878	0	0	0
	RTG	0	0	0	0	0	0
NL3/1a	GW / opgw	1954	10208	25731	0	0	0
Wind, 10°C	150C1F1	7196	31077	81279	0	0	0
Permanent loads yg= 0.9	150C1F2	7196	29503	78160	0	0	0
Wind angle: 90°	150C1F3	7195	27538	74322	0	0	0
	380C2F1	14392	62154	162559	0	0	0
	380C2F2	14391	59006	156320	0	0	0
	380C2F3	14390	55075	148645	0	0	0
	RTG	0	0	0	0	0	0
NL3/1b	GW / opgw	1952	5983	18527	0	0	0
Wind, -20°C	150C1F1	7189	20810	66996	0	0	0
Permanent loads yg= 0.9	150C1F2	7189	20455	66519	0	0	0
Wind angle: 90°	150C1F3	7189	20020	65968	0	0	0
	380C2F1	14379	41620	133992	0	0	0
	380C2F2	14379	40910	133037	0	0	0
	380C2F3	14378	40039	131936	0	0	0
	RTG	0	0	0	0	0	0
NL3/3	GW / opgw	3721	16048	40351	0	0	0
Wind, -5°C	150C1F1	8747	31276	86909	0	0	0
Permanent loads yg= 0.9	150C1F2	8747	30032	84636	0	0	0
Wind angle: 90°	150C1F3	8747	28495	81901	0	0	0
	380C2F1	17495	62552	173818	0	0	0
	380C2F2	17494	60065	169273	0	0	0
	380C2F3	17493	56989	163802	0	0	0
	RTG	0	0	0	0	0	0

NL3/4	GW / opgw	2554	6506	20476	0	0	0
Construction/maintenance, +5°C	150C1F1	8397	20979	67619	0	0	0
Permanent loads yg= 0.9	150C1F2	8397	20652	67249	0	0	0
Wind angle: 90°	150C1F3	8397	20250	66824	0	0	0
	380C2F1	16793	41957	135239	0	0	0
	380C2F2	16793	41304	134497	0	0	0
	380C2F3	16793	40501	133648	0	0	0
	RTG	0	0	0	0	0	0
NL3/1a	GW / opgw	1953	8771	22794	0	0	0
Wind, 10°C	150C1F1	7195	27228	73726	0	0	0
Permanent loads yg= 0.9	150C1F2	7195	26012	71402	0	0	0
Wind angle: -45°	150C1F3	7195	24505	68586	0	0	0
	380C2F1	14390	54457	147451	0	0	0
	380C2F2	14390	52025	142805	0	0	0
	380C2F3	14389	49010	137172	0	0	0
	RTG	0	0	0	0	0	0
NL3/1b	GW / opgw	1952	5645	18010	0	0	0
Wind, -20°C	150C1F1	7189	19952	65886	0	0	0
Permanent loads yg= 0.9	150C1F2	7189	19687	65577	0	0	0
Wind angle: -45°	150C1F3	7189	19360	65223	0	0	0
	380C2F1	14378	39904	131772	0	0	0
	380C2F2	14378	39373	131154	0	0	0
	380C2F3	14378	38721	130446	0	0	0
	RTG	0	0	0	0	0	0
NL3/3	GW / opgw	3721	14009	36576	0	0	0
Wind, -5°C	150C1F1	8747	28254	81482	0	0	0
Permanent loads yg= 0.9	150C1F2	8746	27312	79870	0	0	0
Wind angle: -45°	150C1F3	8746	26153	77956	0	0	0
	380C2F1	17493	56508	162964	0	0	0
	380C2F2	17493	54624	159739	0	0	0
	380C2F3	17492	52305	155912	0	0	0
	RTG	0	0	0	0	0	0
NL3/4	GW / opgw	2554	6210	20120	0	0	0
Construction/maintenance, +5°C	150C1F1	8397	20188	66761	0	0	0
Permanent loads yg= 0.9	150C1F2	8397	19942	66524	0	0	0
Wind angle: -45°	150C1F3	8396	19638	66256	0	0	0
	380C2F1	16793	40375	133522	0	0	0
	380C2F2	16793	39883	133049	0	0	0
	380C2F3	16793	39276	132512	0	0	0
	RTG	0	0	0	0	0	0

ZWW4HK450

Loadcases for tower strength (Special limit state)

		Ahead			Back		
Loadcase according to 50341-3-15	Att. Point	Vertical [N]	Transversal [N]	Longitudinal [N]	Vertical [N]	Transversal [N]	Longitudinal [N]
NL3/1a	GW / opgw	2604	5480	19563	2604	5480	-19563
Wind, 10°C	150C1F1	9593	19914	71831	9593	19914	-71831
Permanent loads yg= 1.2	150C1F2	9593	19859	71823	9593	19859	-71823
Wind angle: 0°	150C1F3	9593	19790	71816	9593	19790	-71816
	380C2F1	0	0	0	0	0	0
	380C2F2	0	0	0	0	0	0
	380C2F3	0	0	0	0	0	0
	RTG	0	0	0	0	0	0
NL3/1b	GW / opgw	2603	5872	21643	2603	5872	-21643
Wind, -20°C	150C1F1	9588	21778	80512	9588	21778	-80512
Permanent loads yg= 1.2	150C1F2	9588	21763	80514	9588	21763	-80514
Wind angle: 0°	150C1F3	9588	21743	80517	9588	21743	-80517
	380C2F1	0	0	0	0	0	0
	380C2F2	0	0	0	0	0	0
	380C2F3	0	0	0	0	0	0
	RTG	0	0	0	0	0	0
NL3/3	GW / opgw	4371	8769	31323	4371	8769	-31323
Wind, -5°C	150C1F1	11145	23525	85655	11145	23525	-85655
Permanent loads yg= 1.2	150C1F2	11145	23479	85654	11145	23479	-85654
Wind angle: 0°	150C1F3	11145	23421	85653	11145	23421	-85653
	380C2F1	0	0	0	0	0	0
	380C2F2	0	0	0	0	0	0
	380C2F3	0	0	0	0	0	0
	RTG	0	0	0	0	0	0
NL3/4	GW / opgw	3206	6409	23646	3206	6409	-23646
Construction/maintenance, +5°C	150C1F1	10796	21807	80617	10796	21807	-80617
Permanent loads yg= 1.2	150C1F2	10796	21791	80620	10796	21791	-80620
Wind angle: 0°	150C1F3	10796	21771	80623	10796	21771	-80623
	380C2F1	0	0	0	0	0	0
	380C2F2	0	0	0	0	0	0
	380C2F3	0	0	0	0	0	0
	RTG	0	0	0	0	0	0
NL3/1a	GW / opgw	2604	6303	20211	2605	9462	-25373
Wind, 10°C	150C1F1	9593	22078	73098	9595	30173	-84712
Permanent loads yg= 1.2	150C1F2	9593	21818	72869	9595	29084	-82861
Wind angle: 45°	150C1F3	9593	21498	72609	9594	27741	-80659
	380C2F1	0	0	0	0	0	0
	380C2F2	0	0	0	0	0	0
	380C2F3	0	0	0	0	0	0
	RTG	0	0	0	0	0	0
NL3/1b	GW / opgw	2603	6081	21676	2603	6777	-22237
Wind, -20°C	150C1F1	9588	22349	80547	9588	24175	-81645
Permanent loads yg= 1.2	150C1F2	9588	22284	80533	9588	23938	-81440
Wind angle: 45°	150C1F3	9588	22203	80520	9588	23644	-81208
	380C2F1	0	0	0	0	0	0
	380C2F2	0	0	0	0	0	0
	380C2F3	0	0	0	0	0	0
	RTG	0	0	0	0	0	0
NL3/3	GW / opgw	4371	10016	32147	4373	14660	-39007
Wind, -5°C	150C1F1	11145	25279	86353	11146	31579	-93885
Permanent loads yg= 1.2	150C1F2	11145	25073	86218	11146	30731	-92625
Wind angle: 45°	150C1F3	11145	24817	86067	11146	29689	-91151
	380C2F1	0	0	0	0	0	0
	380C2F2	0	0	0	0	0	0
	380C2F3	0	0	0	0	0	0
	RTG	0	0	0	0	0	0
NL3/4	GW / opgw	3206	6612	23658	3206	7262	-24043
Construction/maintenance, +5°C	150C1F1	10797	22369	80622	10797	24129	-81469
Permanent loads yg= 1.2	150C1F2	10797	22306	80613	10797	23903	-81305
Wind angle: 45°	150C1F3	10797	22227	80605	10797	23622	-81122
	380C2F1	0	0	0	0	0	0
	380C2F2	0	0	0	0	0	0
	380C2F3	0	0	0	0	0	0
	RTG	0	0	0	0	0	0
NL3/1a	GW / opgw	2605	10793	27912	2605	10793	-27912
Wind, 10°C	150C1F1	9596	33659	90909	9596	33659	-90909
Permanent loads yg= 1.2	150C1F2	9596	32226	88319	9596	32226	-88319
Wind angle: 90°	150C1F3	9595	30451	85191	9595	30451	-85191
	380C2F1	0	0	0	0	0	0
	380C2F2	0	0	0	0	0	0
	380C2F3	0	0	0	0	0	0
	RTG	0	0	0	0	0	0

NL3/1b	GW / opgw	2603	7075	22601	2603	7075	-22601
Wind, -20°C	150C1F1	9588	24937	82396	9588	24937	-82396
Permanent loads yg= 1.2	150C1F2	9588	24623	82071	9588	24623	-82071
Wind angle: 90°	150C1F3	9588	24236	81700	9588	24236	-81700
	380C2F1	0	0	0	0	0	0
	380C2F2	0	0	0	0	0	0
	380C2F3	0	0	0	0	0	0
	RTG	0	0	0	0	0	0
NL3/3	GW / opgw	4373	16605	42427	4373	16605	-42427
Wind, -5°C	150C1F1	11147	34309	98225	11147	34309	-98225
Permanent loads yg= 1.2	150C1F2	11147	33183	96390	11147	33183	-96390
Wind angle: 90°	150C1F3	11147	31795	94214	11147	31795	-94214
	380C2F1	0	0	0	0	0	0
	380C2F2	0	0	0	0	0	0
	380C2F3	0	0	0	0	0	0
	RTG	0	0	0	0	0	0
NL3/4	GW / opgw	3206	7532	24307	3206	7532	-24307
Construction/maintenance, +5°C	150C1F1	10797	24852	82073	10797	24852	-82073
Permanent loads yg= 1.2	150C1F2	10797	24555	81810	10797	24555	-81810
Wind angle: 90°	150C1F3	10797	24187	81513	10797	24187	-81513
	380C2F1	0	0	0	0	0	0
	380C2F2	0	0	0	0	0	0
	380C2F3	0	0	0	0	0	0
	RTG	0	0	0	0	0	0
NL3/1a	GW / opgw	2605	9462	25373	2604	6303	-20211
Wind, 10°C	150C1F1	9595	30173	84712	9593	22078	-73098
Permanent loads yg= 1.2	150C1F2	9595	29084	82861	9593	21818	-72869
Wind angle: -45°	150C1F3	9594	27741	80659	9593	21498	-72609
	380C2F1	0	0	0	0	0	0
	380C2F2	0	0	0	0	0	0
	380C2F3	0	0	0	0	0	0
	RTG	0	0	0	0	0	0
NL3/1b	GW / opgw	2603	6777	22237	2603	6081	-21676
Wind, -20°C	150C1F1	9588	24175	81645	9588	22349	-80547
Permanent loads yg= 1.2	150C1F2	9588	23938	81440	9588	22284	-80533
Wind angle: -45°	150C1F3	9588	23644	81208	9588	22203	-80520
	380C2F1	0	0	0	0	0	0
	380C2F2	0	0	0	0	0	0
	380C2F3	0	0	0	0	0	0
	RTG	0	0	0	0	0	0
NL3/3	GW / opgw	4373	14660	39007	4371	10016	-32147
Wind, -5°C	150C1F1	11146	31579	93885	11145	25279	-86353
Permanent loads yg= 1.2	150C1F2	11146	30731	92625	11145	25073	-86218
Wind angle: -45°	150C1F3	11146	29689	91151	11145	24817	-86067
	380C2F1	0	0	0	0	0	0
	380C2F2	0	0	0	0	0	0
	380C2F3	0	0	0	0	0	0
	RTG	0	0	0	0	0	0
NL3/4	GW / opgw	3206	7262	24043	3206	6612	-23658
Construction/maintenance, +5°C	150C1F1	10797	24129	81469	10797	22369	-80622
Permanent loads yg= 1.2	150C1F2	10797	23903	81305	10797	22306	-80613
Wind angle: -45°	150C1F3	10797	23622	81122	10797	22227	-80605
	380C2F1	0	0	0	0	0	0
	380C2F2	0	0	0	0	0	0
	380C2F3	0	0	0	0	0	0
	RTG	0	0	0	0	0	0
NL3/1a	GW / opgw	1953	4335	15291	1953	4335	-15291
Wind, 10°C	150C1F1	7193	15760	56325	7193	15760	-56325
Permanent loads yg= 0.9	150C1F2	7193	15702	56309	7193	15702	-56309
Wind angle: 0°	150C1F3	7193	15631	56292	7193	15631	-56292
	380C2F1	0	0	0	0	0	0
	380C2F2	0	0	0	0	0	0
	380C2F3	0	0	0	0	0	0
	RTG	0	0	0	0	0	0
NL3/1b	GW / opgw	1952	4654	17096	1952	4654	-17096
Wind, -20°C	150C1F1	7189	17366	64043	7189	17366	-64043
Permanent loads yg= 0.9	150C1F2	7189	17350	64044	7189	17350	-64044
Wind angle: 0°	150C1F3	7189	17329	64046	7189	17329	-64046
	380C2F1	0	0	0	0	0	0
	380C2F2	0	0	0	0	0	0
	380C2F3	0	0	0	0	0	0
	RTG	0	0	0	0	0	0

NL3/3	GW / opgw	3719	7753	27532	3719	7753	-27532
Wind, -5°C	150C1F1	8745	19427	70362	8745	19427	-70362
Permanent loads yg= 0.9	150C1F2	8745	19380	70356	8745	19380	-70356
Wind angle: 0°	150C1F3	8745	19320	70350	8745	19320	-70350
	380C2F1	0	0	0	0	0	0
	380C2F2	0	0	0	0	0	0
	380C2F3	0	0	0	0	0	0
	RTG	0	0	0	0	0	0
NL3/4	GW / opgw	2554	5309	19540	2554	5309	-19540
Construction/maintenance, +5°C	150C1F1	8396	17734	65417	8396	17734	-65417
Permanent loads yg= 0.9	150C1F2	8396	17718	65418	8396	17718	-65418
Wind angle: 0°	150C1F3	8396	17698	65421	8396	17698	-65421
	380C2F1	0	0	0	0	0	0
	380C2F2	0	0	0	0	0	0
	380C2F3	0	0	0	0	0	0
	RTG	0	0	0	0	0	0
NL3/1a	GW / opgw	1953	5242	16253	1953	8771	-22794
Wind, 10°C	150C1F1	7193	18110	58292	7195	27228	-73726
Permanent loads yg= 0.9	150C1F2	7193	17821	57953	7195	26012	-71402
Wind angle: 45°	150C1F3	7193	17467	57565	7195	24505	-68586
	380C2F1	0	0	0	0	0	0
	380C2F2	0	0	0	0	0	0
	380C2F3	0	0	0	0	0	0
	RTG	0	0	0	0	0	0
NL3/1b	GW / opgw	1952	4872	17166	1952	5645	-18010
Wind, -20°C	150C1F1	7189	17956	64156	7189	19952	-65886
Permanent loads yg= 0.9	150C1F2	7189	17889	64130	7189	19687	-65577
Wind angle: 45°	150C1F3	7189	17804	64101	7189	19360	-65223
	380C2F1	0	0	0	0	0	0
	380C2F2	0	0	0	0	0	0
	380C2F3	0	0	0	0	0	0
	RTG	0	0	0	0	0	0
NL3/3	GW / opgw	3719	9062	28588	3721	14009	-36576
Wind, -5°C	150C1F1	8745	21283	71442	8747	28254	-81482
Permanent loads yg= 0.9	150C1F2	8745	21060	71246	8746	27312	-79870
Wind angle: 45°	150C1F3	8745	20785	71024	8746	26153	-77956
	380C2F1	0	0	0	0	0	0
	380C2F2	0	0	0	0	0	0
	380C2F3	0	0	0	0	0	0
	RTG	0	0	0	0	0	0
NL3/4	GW / opgw	2554	5517	19572	2554	6210	-20120
Construction/maintenance, +5°C	150C1F1	8396	18310	65474	8397	20188	-66761
Permanent loads yg= 0.9	150C1F2	8396	18245	65457	8397	19942	-66524
Wind angle: 45°	150C1F3	8396	18163	65439	8396	19638	-66256
	380C2F1	0	0	0	0	0	0
	380C2F2	0	0	0	0	0	0
	380C2F3	0	0	0	0	0	0
	RTG	0	0	0	0	0	0
NL3/1a	GW / opgw	1954	10208	25731	1954	10208	-25731
Wind, 10°C	150C1F1	7196	31077	81279	7196	31077	-81279
Permanent loads yg= 0.9	150C1F2	7196	29503	78160	7196	29503	-78160
Wind angle: 90°	150C1F3	7195	27538	74322	7195	27538	-74322
	380C2F1	0	0	0	0	0	0
	380C2F2	0	0	0	0	0	0
	380C2F3	0	0	0	0	0	0
	RTG	0	0	0	0	0	0
NL3/1b	GW / opgw	1952	5983	18527	1952	5983	-18527
Wind, -20°C	150C1F1	7189	20810	66996	7189	20810	-66996
Permanent loads yg= 0.9	150C1F2	7189	20455	66519	7189	20455	-66519
Wind angle: 90°	150C1F3	7189	20020	65968	7189	20020	-65968
	380C2F1	0	0	0	0	0	0
	380C2F2	0	0	0	0	0	0
	380C2F3	0	0	0	0	0	0
	RTG	0	0	0	0	0	0
NL3/3	GW / opgw	3721	16048	40351	3721	16048	-40351
Wind, -5°C	150C1F1	8747	31276	86909	8747	31276	-86909
Permanent loads yg= 0.9	150C1F2	8747	30032	84636	8747	30032	-84636
Wind angle: 90°	150C1F3	8747	28495	81901	8747	28495	-81901
	380C2F1	0	0	0	0	0	0
	380C2F2	0	0	0	0	0	0
	380C2F3	0	0	0	0	0	0
	RTG	0	0	0	0	0	0

NL3/4	GW / opgw	2554	6506	20476	2554	6506	-20476
Construction/maintenance, +5°C	150C1F1	8397	20979	67619	8397	20979	-67619
Permanent loads yg= 0.9	150C1F2	8397	20652	67249	8397	20652	-67249
Wind angle: 90°	150C1F3	8397	20250	66824	8397	20250	-66824
	380C2F1	0	0	0	0	0	0
	380C2F2	0	0	0	0	0	0
	380C2F3	0	0	0	0	0	0
	RTG	0	0	0	0	0	0
NL3/1a	GW / opgw	1953	8771	22794	1953	5242	-16253
Wind, 10°C	150C1F1	7195	27228	73726	7193	18110	-58292
Permanent loads yg= 0.9	150C1F2	7195	26012	71402	7193	17821	-57953
Wind angle: -45°	150C1F3	7195	24505	68586	7193	17467	-57565
	380C2F1	0	0	0	0	0	0
	380C2F2	0	0	0	0	0	0
	380C2F3	0	0	0	0	0	0
	RTG	0	0	0	0	0	0
NL3/1b	GW / opgw	1952	5645	18010	1952	4872	-17166
Wind, -20°C	150C1F1	7189	19952	65886	7189	17956	-64156
Permanent loads yg= 0.9	150C1F2	7189	19687	65577	7189	17889	-64130
Wind angle: -45°	150C1F3	7189	19360	65223	7189	17804	-64101
	380C2F1	0	0	0	0	0	0
	380C2F2	0	0	0	0	0	0
	380C2F3	0	0	0	0	0	0
	RTG	0	0	0	0	0	0
NL3/3	GW / opgw	3721	14009	36576	3719	9062	-28588
Wind, -5°C	150C1F1	8747	28254	81482	8745	21283	-71442
Permanent loads yg= 0.9	150C1F2	8746	27312	79870	8745	21060	-71246
Wind angle: -45°	150C1F3	8746	26153	77956	8745	20785	-71024
	380C2F1	0	0	0	0	0	0
	380C2F2	0	0	0	0	0	0
	380C2F3	0	0	0	0	0	0
	RTG	0	0	0	0	0	0
NL3/4	GW / opgw	2554	6210	20120	2554	5517	-19572
Construction/maintenance, +5°C	150C1F1	8397	20188	66761	8396	18310	-65474
Permanent loads yg= 0.9	150C1F2	8397	19942	66524	8396	18245	-65457
Wind angle: -45°	150C1F3	8396	19638	66256	8396	18163	-65439
	380C2F1	0	0	0	0	0	0
	380C2F2	0	0	0	0	0	0
	380C2F3	0	0	0	0	0	0
	RTG	0	0	0	0	0	0

ZWW4HK450

Loadcases for tower strength (Special limit state)

		Ahead			Back		
Loadcase according to 50341-3-15	Att. Point	Vertical [N]	Transversal [N]	Longitudinal [N]	Vertical [N]	Transversal [N]	Longitudinal [N]
NL3/1a	GW / opgw	0	0	0	0	0	0
Wind, 10°C	150C1F1	0	0	0	0	0	0
Permanent loads yg= 1.2	150C1F2	0	0	0	0	0	0
Wind angle: 0°	150C1F3	0	0	0	0	0	0
	380C2F1	19186	39829	143662	19186	39829	-143662
	380C2F2	19186	39719	143647	19186	39719	-143647
	380C2F3	19186	39581	143633	19186	39581	-143633
	RTG	0	0	0	5200	10767	-39047
NL3/1b	GW / opgw	0	0	0	0	0	0
Wind, -20°C	150C1F1	0	0	0	0	0	0
Permanent loads yg= 1.2	150C1F2	0	0	0	0	0	0
Wind angle: 0°	150C1F3	0	0	0	0	0	0
	380C2F1	19175	43557	161025	19175	43557	-161025
	380C2F2	19175	43525	161029	19175	43525	-161029
	380C2F3	19175	43486	161034	19175	43486	-161034
	RTG	0	0	0	5198	11602	-42948
NL3/3	GW / opgw	0	0	0	0	0	0
Wind, -5°C	150C1F1	0	0	0	0	0	0
Permanent loads yg= 1.2	150C1F2	0	0	0	0	0	0
Wind angle: 0°	150C1F3	0	0	0	0	0	0
	380C2F1	22290	47050	171311	22290	47050	-171311
	380C2F2	22290	46958	171308	22290	46958	-171308
	380C2F3	22290	46842	171307	22290	46842	-171307
	RTG	0	0	0	8742	17230	-62511
NL3/4	GW / opgw	0	0	0	0	0	0
Construction/maintenance, +5°C	150C1F1	0	0	0	0	0	0
Permanent loads yg= 1.2	150C1F2	0	0	0	0	0	0
Wind angle: 0°	150C1F3	0	0	0	0	0	0
	380C2F1	21593	43613	161235	21593	43613	-161235
	380C2F2	21593	43582	161239	21593	43582	-161239
	380C2F3	21593	43542	161246	21593	43542	-161246
	RTG	0	0	0	6404	12748	-47227
NL3/1a	GW / opgw	0	0	0	0	0	0
Wind, 10°C	150C1F1	0	0	0	0	0	0
Permanent loads yg= 1.2	150C1F2	0	0	0	0	0	0
Wind angle: 45°	150C1F3	0	0	0	0	0	0
	380C2F1	19187	44156	146196	19190	60346	-169423
	380C2F2	19186	43637	145737	19190	58168	-165723
	380C2F3	19186	42996	145217	19189	55482	-161318
	RTG	0	0	0	5201	15268	-44237
NL3/1b	GW / opgw	0	0	0	0	0	0
Wind, -20°C	150C1F1	0	0	0	0	0	0
Permanent loads yg= 1.2	150C1F2	0	0	0	0	0	0
Wind angle: 45°	150C1F3	0	0	0	0	0	0
	380C2F1	19175	44697	161094	19176	48350	-163290
	380C2F2	19175	44568	161067	19176	47875	-162880
	380C2F3	19175	44407	161040	19176	47288	-162415
	RTG	0	0	0	5198	12669	-43363
NL3/3	GW / opgw	0	0	0	0	0	0
Wind, -5°C	150C1F1	0	0	0	0	0	0
Permanent loads yg= 1.2	150C1F2	0	0	0	0	0	0
Wind angle: 45°	150C1F3	0	0	0	0	0	0
	380C2F1	22290	50557	172706	22293	63157	-187769
	380C2F2	22290	50145	172436	22293	61462	-185250
	380C2F3	22290	49633	172134	22292	59378	-182301
	RTG	0	0	0	8744	23926	-69220
NL3/4	GW / opgw	0	0	0	0	0	0
Construction/maintenance, +5°C	150C1F1	0	0	0	0	0	0
Permanent loads yg= 1.2	150C1F2	0	0	0	0	0	0
Wind angle: 45°	150C1F3	0	0	0	0	0	0
	380C2F1	21593	44738	161243	21593	48258	-162938
	380C2F2	21593	44612	161226	21593	47805	-162611
	380C2F3	21593	44453	161210	21593	47244	-162244
	RTG	0	0	0	6404	13771	-47474
NL3/1a	GW / opgw	0	0	0	0	0	0
Wind, 10°C	150C1F1	0	0	0	0	0	0
Permanent loads yg= 1.2	150C1F2	0	0	0	0	0	0
Wind angle: 90°	150C1F3	0	0	0	0	0	0
	380C2F1	19192	67317	181817	19192	67317	-181817
	380C2F2	19191	64452	176637	19191	64452	-176637
	380C2F3	19190	60902	170383	19190	60902	-170383
	RTG	0	0	0	5201	16808	-46877

NL3/1b	GW / opgw	0	0	0	0	0	0
Wind, -20°C	150C1F1	0	0	0	0	0	0
Permanent loads yg= 1.2	150C1F2	0	0	0	0	0	0
Wind angle: 90°	150C1F3	0	0	0	0	0	0
	380C2F1	19176	49874	164792	19176	49874	-164792
	380C2F2	19176	49246	164141	19176	49246	-164141
	380C2F3	19176	48471	163400	19176	48471	-163400
	RTG	0	0	0	5198	13003	-43653
NL3/3	GW / opgw	0	0	0	0	0	0
Wind, -5°C	150C1F1	0	0	0	0	0	0
Permanent loads yg= 1.2	150C1F2	0	0	0	0	0	0
Wind angle: 90°	150C1F3	0	0	0	0	0	0
	380C2F1	22295	68618	196450	22295	68618	-196450
	380C2F2	22294	66366	192779	22294	66366	-192779
	380C2F3	22293	63590	188429	22293	63590	-188429
	RTG	0	0	0	8745	26174	-72712
NL3/4	GW / opgw	0	0	0	0	0	0
Construction/maintenance, +5°C	150C1F1	0	0	0	0	0	0
Permanent loads yg= 1.2	150C1F2	0	0	0	0	0	0
Wind angle: 90°	150C1F3	0	0	0	0	0	0
	380C2F1	21594	49704	164145	21594	49704	-164145
	380C2F2	21594	49109	163620	21594	49109	-163620
	380C2F3	21593	48373	163025	21593	48373	-163025
	RTG	0	0	0	6404	14081	-47676
NL3/1a	GW / opgw	0	0	0	0	0	0
Wind, 10°C	150C1F1	0	0	0	0	0	0
Permanent loads yg= 1.2	150C1F2	0	0	0	0	0	0
Wind angle: -45°	150C1F3	0	0	0	0	0	0
	380C2F1	19190	60346	169423	19187	44156	-146196
	380C2F2	19190	58168	165723	19186	43637	-145737
	380C2F3	19189	55482	161318	19186	42996	-145217
	RTG	0	0	0	5200	11727	-39521
NL3/1b	GW / opgw	0	0	0	0	0	0
Wind, -20°C	150C1F1	0	0	0	0	0	0
Permanent loads yg= 1.2	150C1F2	0	0	0	0	0	0
Wind angle: -45°	150C1F3	0	0	0	0	0	0
	380C2F1	19176	48350	163290	19175	44697	-161094
	380C2F2	19176	47875	162880	19175	44568	-161067
	380C2F3	19176	47288	162415	19175	44407	-161040
	RTG	0	0	0	5198	11859	-42953
NL3/3	GW / opgw	0	0	0	0	0	0
Wind, -5°C	150C1F1	0	0	0	0	0	0
Permanent loads yg= 1.2	150C1F2	0	0	0	0	0	0
Wind angle: -45°	150C1F3	0	0	0	0	0	0
	380C2F1	22293	63157	187769	22290	50557	-172706
	380C2F2	22293	61462	185250	22290	50145	-172436
	380C2F3	22292	59378	182301	22290	49633	-172134
	RTG	0	0	0	8742	18696	-63083
NL3/4	GW / opgw	0	0	0	0	0	0
Construction/maintenance, +5°C	150C1F1	0	0	0	0	0	0
Permanent loads yg= 1.2	150C1F2	0	0	0	0	0	0
Wind angle: -45°	150C1F3	0	0	0	0	0	0
	380C2F1	21593	48258	162938	21593	44738	-161243
	380C2F2	21593	47805	162611	21593	44612	-161226
	380C2F3	21593	47244	162244	21593	44453	-161210
	RTG	0	0	0	6404	13001	-47213
NL3/1a	GW / opgw	0	0	0	0	0	0
Wind, 10°C	150C1F1	0	0	0	0	0	0
Permanent loads yg= 0.9	150C1F2	0	0	0	0	0	0
Wind angle: 0°	150C1F3	0	0	0	0	0	0
	380C2F1	14386	31519	112651	14386	31519	-112651
	380C2F2	14386	31405	112618	14386	31405	-112618
	380C2F3	14386	31261	112584	14386	31261	-112584
	RTG	0	0	0	3899	8469	-30469
NL3/1b	GW / opgw	0	0	0	0	0	0
Wind, -20°C	150C1F1	0	0	0	0	0	0
Permanent loads yg= 0.9	150C1F2	0	0	0	0	0	0
Wind angle: 0°	150C1F3	0	0	0	0	0	0
	380C2F1	14378	34731	128087	14378	34731	-128087
	380C2F2	14378	34699	128089	14378	34699	-128089
	380C2F3	14378	34659	128092	14378	34659	-128092
	RTG	0	0	0	3898	9170	-33875

NL3/3	GW / opgw	0	0	0	0	0	0
Wind, -5°C	150C1F1	0	0	0	0	0	0
Permanent loads yg= 0.9	150C1F2	0	0	0	0	0	0
Wind angle: 0°	150C1F3	0	0	0	0	0	0
	380C2F1	17490	38854	140725	17490	38854	-140725
	380C2F2	17490	38759	140712	17490	38759	-140712
	380C2F3	17490	38641	140701	17490	38641	-140701
	RTG	0	0	0	7440	15192	-54906
NL3/4	GW / opgw	0	0	0	0	0	0
Construction/maintenance, +5°C	150C1F1	0	0	0	0	0	0
Permanent loads yg= 0.9	150C1F2	0	0	0	0	0	0
Wind angle: 0°	150C1F3	0	0	0	0	0	0
	380C2F1	16793	35467	130833	16793	35467	-130833
	380C2F2	16793	35436	130837	16793	35436	-130837
	380C2F3	16793	35396	130841	16793	35396	-130841
	RTG	0	0	0	5103	10547	-39011
NL3/1a	GW / opgw	0	0	0	0	0	0
Wind, 10°C	150C1F1	0	0	0	0	0	0
Permanent loads yg= 0.9	150C1F2	0	0	0	0	0	0
Wind angle: 45°	150C1F3	0	0	0	0	0	0
	380C2F1	14387	36220	116583	14390	54457	-147451
	380C2F2	14387	35643	115906	14390	52025	-142805
	380C2F3	14387	34933	115130	14389	49010	-137172
	RTG	0	0	0	3900	13493	-37618
NL3/1b	GW / opgw	0	0	0	0	0	0
Wind, -20°C	150C1F1	0	0	0	0	0	0
Permanent loads yg= 0.9	150C1F2	0	0	0	0	0	0
Wind angle: 45°	150C1F3	0	0	0	0	0	0
	380C2F1	14378	35913	128311	14378	39904	-131772
	380C2F2	14378	35777	128259	14378	39373	-131154
	380C2F3	14378	35608	128202	14378	38721	-130446
	RTG	0	0	0	3898	10312	-34566
NL3/3	GW / opgw	0	0	0	0	0	0
Wind, -5°C	150C1F1	0	0	0	0	0	0
Permanent loads yg= 0.9	150C1F2	0	0	0	0	0	0
Wind angle: 45°	150C1F3	0	0	0	0	0	0
	380C2F1	17490	42566	142884	17493	56508	-162964
	380C2F2	17490	42121	142492	17493	54624	-159739
	380C2F3	17490	41571	142048	17492	52305	-155912
	RTG	0	0	0	7442	22289	-63115
NL3/4	GW / opgw	0	0	0	0	0	0
Construction/maintenance, +5°C	150C1F1	0	0	0	0	0	0
Permanent loads yg= 0.9	150C1F2	0	0	0	0	0	0
Wind angle: 45°	150C1F3	0	0	0	0	0	0
	380C2F1	16793	36620	130948	16793	40375	-133522
	380C2F2	16793	36489	130914	16793	39883	-133049
	380C2F3	16793	36325	130878	16793	39276	-132512
	RTG	0	0	0	5103	11611	-39414
NL3/1a	GW / opgw	0	0	0	0	0	0
Wind, 10°C	150C1F1	0	0	0	0	0	0
Permanent loads yg= 0.9	150C1F2	0	0	0	0	0	0
Wind angle: 90°	150C1F3	0	0	0	0	0	0
	380C2F1	14392	62154	162559	14392	62154	-162559
	380C2F2	14391	59006	156320	14391	59006	-156320
	380C2F3	14390	55075	148645	14390	55075	-148645
	RTG	0	0	0	3901	15214	-40930
NL3/1b	GW / opgw	0	0	0	0	0	0
Wind, -20°C	150C1F1	0	0	0	0	0	0
Permanent loads yg= 0.9	150C1F2	0	0	0	0	0	0
Wind angle: 90°	150C1F3	0	0	0	0	0	0
	380C2F1	14379	41620	133992	14379	41620	-133992
	380C2F2	14379	40910	133037	14379	40910	-133037
	380C2F3	14378	40039	131936	14378	40039	-131936
	RTG	0	0	0	3898	10684	-34999
NL3/3	GW / opgw	0	0	0	0	0	0
Wind, -5°C	150C1F1	0	0	0	0	0	0
Permanent loads yg= 0.9	150C1F2	0	0	0	0	0	0
Wind angle: 90°	150C1F3	0	0	0	0	0	0
	380C2F1	17495	62552	173818	17495	62552	-173818
	380C2F2	17494	60065	169273	17494	60065	-169273
	380C2F3	17493	56989	163802	17493	56989	-163802
	RTG	0	0	0	7443	24686	-67163

NL3/4	GW / opgw	0	0	0	0	0	0
Construction/maintenance, +5°C	150C1F1	0	0	0	0	0	0
Permanent loads yg= 0.9	150C1F2	0	0	0	0	0	0
Wind angle: 90°	150C1F3	0	0	0	0	0	0
	380C2F1	16793	41957	135239	16793	41957	-135239
	380C2F2	16793	41304	134497	16793	41304	-134497
	380C2F3	16793	40501	133648	16793	40501	-133648
	RTG	0	0	0	5103	11944	-39698
NL3/1a	GW / opgw	0	0	0	0	0	0
Wind, 10°C	150C1F1	0	0	0	0	0	0
Permanent loads yg= 0.9	150C1F2	0	0	0	0	0	0
Wind angle: -45°	150C1F3	0	0	0	0	0	0
	380C2F1	14390	54457	147451	14387	36220	-116583
	380C2F2	14390	52025	142805	14387	35643	-115906
	380C2F3	14389	49010	137172	14387	34933	-115130
	RTG	0	0	0	3900	9503	-31218
NL3/1b	GW / opgw	0	0	0	0	0	0
Wind, -20°C	150C1F1	0	0	0	0	0	0
Permanent loads yg= 0.9	150C1F2	0	0	0	0	0	0
Wind angle: -45°	150C1F3	0	0	0	0	0	0
	380C2F1	14378	39904	131772	14378	35913	-128311
	380C2F2	14378	39373	131154	14378	35777	-128259
	380C2F3	14378	38721	130446	14378	35608	-128202
	RTG	0	0	0	3898	9436	-33909
NL3/3	GW / opgw	0	0	0	0	0	0
Wind, -5°C	150C1F1	0	0	0	0	0	0
Permanent loads yg= 0.9	150C1F2	0	0	0	0	0	0
Wind angle: -45°	150C1F3	0	0	0	0	0	0
	380C2F1	17493	56508	162964	17490	42566	-142884
	380C2F2	17493	54624	159739	17490	42121	-142492
	380C2F3	17492	52305	155912	17490	41571	-142048
	RTG	0	0	0	7441	16711	-55679
NL3/4	GW / opgw	0	0	0	0	0	0
Construction/maintenance, +5°C	150C1F1	0	0	0	0	0	0
Permanent loads yg= 0.9	150C1F2	0	0	0	0	0	0
Wind angle: -45°	150C1F3	0	0	0	0	0	0
	380C2F1	16793	40375	133522	16793	36620	-130948
	380C2F2	16793	39883	133049	16793	36489	-130914
	380C2F3	16793	39276	132512	16793	36325	-130878
	RTG	0	0	0	5103	10804	-39014

ZWW4HK450

Loadcases for tower strength (Special limit state)

		Ahead			Back		
Loadcase according to 50341-3-15	Att. Point	Vertical [N]	Transversal [N]	Longitudinal [N]	Vertical [N]	Transversal [N]	Longitudinal [N]
NL3/1a	GW / opgw	0	0	0	0	0	0
Wind, 10°C	150C1F1	0	0	0	0	0	0
Permanent loads yg= 1.2	150C1F2	0	0	0	0	0	0
Wind angle: 0°	150C1F3	0	0	0	0	0	0
	380C2F1	19186	39829	143662	19186	39829	-143662
	380C2F2	19186	39719	143647	19186	39719	-143647
	380C2F3	19186	39581	143633	19186	39581	-143633
	RTG	0	0	0	5200	10767	-39047
NL3/1b	GW / opgw	0	0	0	0	0	0
Wind, -20°C	150C1F1	0	0	0	0	0	0
Permanent loads yg= 1.2	150C1F2	0	0	0	0	0	0
Wind angle: 0°	150C1F3	0	0	0	0	0	0
	380C2F1	19175	43557	161025	19175	43557	-161025
	380C2F2	19175	43525	161029	19175	43525	-161029
	380C2F3	19175	43486	161034	19175	43486	-161034
	RTG	0	0	0	5198	11602	-42948
NL3/3	GW / opgw	0	0	0	0	0	0
Wind, -5°C	150C1F1	0	0	0	0	0	0
Permanent loads yg= 1.2	150C1F2	0	0	0	0	0	0
Wind angle: 0°	150C1F3	0	0	0	0	0	0
	380C2F1	22290	47050	171311	22290	47050	-171311
	380C2F2	22290	46958	171308	22290	46958	-171308
	380C2F3	22290	46842	171307	22290	46842	-171307
	RTG	0	0	0	8742	17230	-62511
NL3/4	GW / opgw	0	0	0	0	0	0
Construction/maintenance, +5°C	150C1F1	0	0	0	0	0	0
Permanent loads yg= 1.2	150C1F2	0	0	0	0	0	0
Wind angle: 0°	150C1F3	0	0	0	0	0	0
	380C2F1	21593	43613	161235	21593	43613	-161235
	380C2F2	21593	43582	161239	21593	43582	-161239
	380C2F3	21593	43542	161246	21593	43542	-161246
	RTG	0	0	0	6404	12748	-47227
NL3/1a	GW / opgw	0	0	0	0	0	0
Wind, 10°C	150C1F1	0	0	0	0	0	0
Permanent loads yg= 1.2	150C1F2	0	0	0	0	0	0
Wind angle: 45°	150C1F3	0	0	0	0	0	0
	380C2F1	19187	44156	146196	19190	60346	-169423
	380C2F2	19186	43637	145737	19190	58168	-165723
	380C2F3	19186	42996	145217	19189	55482	-161318
	RTG	0	0	0	5201	15268	-44237
NL3/1b	GW / opgw	0	0	0	0	0	0
Wind, -20°C	150C1F1	0	0	0	0	0	0
Permanent loads yg= 1.2	150C1F2	0	0	0	0	0	0
Wind angle: 45°	150C1F3	0	0	0	0	0	0
	380C2F1	19175	44697	161094	19176	48350	-163290
	380C2F2	19175	44568	161067	19176	47875	-162880
	380C2F3	19175	44407	161040	19176	47288	-162415
	RTG	0	0	0	5198	12669	-43363
NL3/3	GW / opgw	0	0	0	0	0	0
Wind, -5°C	150C1F1	0	0	0	0	0	0
Permanent loads yg= 1.2	150C1F2	0	0	0	0	0	0
Wind angle: 45°	150C1F3	0	0	0	0	0	0
	380C2F1	22290	50557	172706	22293	63157	-187769
	380C2F2	22290	50145	172436	22293	61462	-185250
	380C2F3	22290	49633	172134	22292	59378	-182301
	RTG	0	0	0	8744	23926	-69220
NL3/4	GW / opgw	0	0	0	0	0	0
Construction/maintenance, +5°C	150C1F1	0	0	0	0	0	0
Permanent loads yg= 1.2	150C1F2	0	0	0	0	0	0
Wind angle: 45°	150C1F3	0	0	0	0	0	0
	380C2F1	21593	44738	161243	21593	48258	-162938
	380C2F2	21593	44612	161226	21593	47805	-162611
	380C2F3	21593	44453	161210	21593	47244	-162244
	RTG	0	0	0	6404	13771	-47474
NL3/1a	GW / opgw	0	0	0	0	0	0
Wind, 10°C	150C1F1	0	0	0	0	0	0
Permanent loads yg= 1.2	150C1F2	0	0	0	0	0	0
Wind angle: 90°	150C1F3	0	0	0	0	0	0
	380C2F1	19192	67317	181817	19192	67317	-181817
	380C2F2	19191	64452	176637	19191	64452	-176637
	380C2F3	19190	60902	170383	19190	60902	-170383
	RTG	0	0	0	5201	16808	-46877

NL3/1b	GW / opgw	0	0	0	0	0	0
Wind, -20°C	150C1F1	0	0	0	0	0	0
Permanent loads yg= 1.2	150C1F2	0	0	0	0	0	0
Wind angle: 90°	150C1F3	0	0	0	0	0	0
	380C2F1	19176	49874	164792	19176	49874	-164792
	380C2F2	19176	49246	164141	19176	49246	-164141
	380C2F3	19176	48471	163400	19176	48471	-163400
	RTG	0	0	0	5198	13003	-43653
NL3/3	GW / opgw	0	0	0	0	0	0
Wind, -5°C	150C1F1	0	0	0	0	0	0
Permanent loads yg= 1.2	150C1F2	0	0	0	0	0	0
Wind angle: 90°	150C1F3	0	0	0	0	0	0
	380C2F1	22295	68618	196450	22295	68618	-196450
	380C2F2	22294	66366	192779	22294	66366	-192779
	380C2F3	22293	63590	188429	22293	63590	-188429
	RTG	0	0	0	8745	26174	-72712
NL3/4	GW / opgw	0	0	0	0	0	0
Construction/maintenance, +5°C	150C1F1	0	0	0	0	0	0
Permanent loads yg= 1.2	150C1F2	0	0	0	0	0	0
Wind angle: 90°	150C1F3	0	0	0	0	0	0
	380C2F1	21594	49704	164145	21594	49704	-164145
	380C2F2	21594	49109	163620	21594	49109	-163620
	380C2F3	21593	48373	163025	21593	48373	-163025
	RTG	0	0	0	6404	14081	-47676
NL3/1a	GW / opgw	0	0	0	0	0	0
Wind, 10°C	150C1F1	0	0	0	0	0	0
Permanent loads yg= 1.2	150C1F2	0	0	0	0	0	0
Wind angle: -45°	150C1F3	0	0	0	0	0	0
	380C2F1	19190	60346	169423	19187	44156	-146196
	380C2F2	19190	58168	165723	19186	43637	-145737
	380C2F3	19189	55482	161318	19186	42996	-145217
	RTG	0	0	0	5200	11727	-39521
NL3/1b	GW / opgw	0	0	0	0	0	0
Wind, -20°C	150C1F1	0	0	0	0	0	0
Permanent loads yg= 1.2	150C1F2	0	0	0	0	0	0
Wind angle: -45°	150C1F3	0	0	0	0	0	0
	380C2F1	19176	48350	163290	19175	44697	-161094
	380C2F2	19176	47875	162880	19175	44568	-161067
	380C2F3	19176	47288	162415	19175	44407	-161040
	RTG	0	0	0	5198	11859	-42953
NL3/3	GW / opgw	0	0	0	0	0	0
Wind, -5°C	150C1F1	0	0	0	0	0	0
Permanent loads yg= 1.2	150C1F2	0	0	0	0	0	0
Wind angle: -45°	150C1F3	0	0	0	0	0	0
	380C2F1	22293	63157	187769	22290	50557	-172706
	380C2F2	22293	61462	185250	22290	50145	-172436
	380C2F3	22292	59378	182301	22290	49633	-172134
	RTG	0	0	0	8742	18696	-63083
NL3/4	GW / opgw	0	0	0	0	0	0
Construction/maintenance, +5°C	150C1F1	0	0	0	0	0	0
Permanent loads yg= 1.2	150C1F2	0	0	0	0	0	0
Wind angle: -45°	150C1F3	0	0	0	0	0	0
	380C2F1	21593	48258	162938	21593	44738	-161243
	380C2F2	21593	47805	162611	21593	44612	-161226
	380C2F3	21593	47244	162244	21593	44453	-161210
	RTG	0	0	0	6404	13001	-47213
NL3/1a	GW / opgw	0	0	0	0	0	0
Wind, 10°C	150C1F1	0	0	0	0	0	0
Permanent loads yg= 0.9	150C1F2	0	0	0	0	0	0
Wind angle: 0°	150C1F3	0	0	0	0	0	0
	380C2F1	14386	31519	112651	14386	31519	-112651
	380C2F2	14386	31405	112618	14386	31405	-112618
	380C2F3	14386	31261	112584	14386	31261	-112584
	RTG	0	0	0	3899	8469	-30469
NL3/1b	GW / opgw	0	0	0	0	0	0
Wind, -20°C	150C1F1	0	0	0	0	0	0
Permanent loads yg= 0.9	150C1F2	0	0	0	0	0	0
Wind angle: 0°	150C1F3	0	0	0	0	0	0
	380C2F1	14378	34731	128087	14378	34731	-128087
	380C2F2	14378	34699	128089	14378	34699	-128089
	380C2F3	14378	34659	128092	14378	34659	-128092
	RTG	0	0	0	3898	9170	-33875

NL3/3	GW / opgw	0	0	0	0	0	0
Wind, -5°C	150C1F1	0	0	0	0	0	0
Permanent loads yg= 0.9	150C1F2	0	0	0	0	0	0
Wind angle: 0°	150C1F3	0	0	0	0	0	0
	380C2F1	17490	38854	140725	17490	38854	-140725
	380C2F2	17490	38759	140712	17490	38759	-140712
	380C2F3	17490	38641	140701	17490	38641	-140701
	RTG	0	0	0	7440	15192	-54906
NL3/4	GW / opgw	0	0	0	0	0	0
Construction/maintenance, +5°C	150C1F1	0	0	0	0	0	0
Permanent loads yg= 0.9	150C1F2	0	0	0	0	0	0
Wind angle: 0°	150C1F3	0	0	0	0	0	0
	380C2F1	16793	35467	130833	16793	35467	-130833
	380C2F2	16793	35436	130837	16793	35436	-130837
	380C2F3	16793	35396	130841	16793	35396	-130841
	RTG	0	0	0	5103	10547	-39011
NL3/1a	GW / opgw	0	0	0	0	0	0
Wind, 10°C	150C1F1	0	0	0	0	0	0
Permanent loads yg= 0.9	150C1F2	0	0	0	0	0	0
Wind angle: 45°	150C1F3	0	0	0	0	0	0
	380C2F1	14387	36220	116583	14390	54457	-147451
	380C2F2	14387	35643	115906	14390	52025	-142805
	380C2F3	14387	34933	115130	14389	49010	-137172
	RTG	0	0	0	3900	13493	-37618
NL3/1b	GW / opgw	0	0	0	0	0	0
Wind, -20°C	150C1F1	0	0	0	0	0	0
Permanent loads yg= 0.9	150C1F2	0	0	0	0	0	0
Wind angle: 45°	150C1F3	0	0	0	0	0	0
	380C2F1	14378	35913	128311	14378	39904	-131772
	380C2F2	14378	35777	128259	14378	39373	-131154
	380C2F3	14378	35608	128202	14378	38721	-130446
	RTG	0	0	0	3898	10312	-34566
NL3/3	GW / opgw	0	0	0	0	0	0
Wind, -5°C	150C1F1	0	0	0	0	0	0
Permanent loads yg= 0.9	150C1F2	0	0	0	0	0	0
Wind angle: 45°	150C1F3	0	0	0	0	0	0
	380C2F1	17490	42566	142884	17493	56508	-162964
	380C2F2	17490	42121	142492	17493	54624	-159739
	380C2F3	17490	41571	142048	17492	52305	-155912
	RTG	0	0	0	7442	22289	-63115
NL3/4	GW / opgw	0	0	0	0	0	0
Construction/maintenance, +5°C	150C1F1	0	0	0	0	0	0
Permanent loads yg= 0.9	150C1F2	0	0	0	0	0	0
Wind angle: 45°	150C1F3	0	0	0	0	0	0
	380C2F1	16793	36620	130948	16793	40375	-133522
	380C2F2	16793	36489	130914	16793	39883	-133049
	380C2F3	16793	36325	130878	16793	39276	-132512
	RTG	0	0	0	5103	11611	-39414
NL3/1a	GW / opgw	0	0	0	0	0	0
Wind, 10°C	150C1F1	0	0	0	0	0	0
Permanent loads yg= 0.9	150C1F2	0	0	0	0	0	0
Wind angle: 90°	150C1F3	0	0	0	0	0	0
	380C2F1	14392	62154	162559	14392	62154	-162559
	380C2F2	14391	59006	156320	14391	59006	-156320
	380C2F3	14390	55075	148645	14390	55075	-148645
	RTG	0	0	0	3901	15214	-40930
NL3/1b	GW / opgw	0	0	0	0	0	0
Wind, -20°C	150C1F1	0	0	0	0	0	0
Permanent loads yg= 0.9	150C1F2	0	0	0	0	0	0
Wind angle: 90°	150C1F3	0	0	0	0	0	0
	380C2F1	14379	41620	133992	14379	41620	-133992
	380C2F2	14379	40910	133037	14379	40910	-133037
	380C2F3	14378	40039	131936	14378	40039	-131936
	RTG	0	0	0	3898	10684	-34999
NL3/3	GW / opgw	0	0	0	0	0	0
Wind, -5°C	150C1F1	0	0	0	0	0	0
Permanent loads yg= 0.9	150C1F2	0	0	0	0	0	0
Wind angle: 90°	150C1F3	0	0	0	0	0	0
	380C2F1	17495	62552	173818	17495	62552	-173818
	380C2F2	17494	60065	169273	17494	60065	-169273
	380C2F3	17493	56989	163802	17493	56989	-163802
	RTG	0	0	0	7443	24686	-67163

NL3/4	GW / opgw	0	0	0	0	0	0
Construction/maintenance, +5°C	150C1F1	0	0	0	0	0	0
Permanent loads yg= 0.9	150C1F2	0	0	0	0	0	0
Wind angle: 90°	150C1F3	0	0	0	0	0	0
	380C2F1	16793	41957	135239	16793	41957	-135239
	380C2F2	16793	41304	134497	16793	41304	-134497
	380C2F3	16793	40501	133648	16793	40501	-133648
	RTG	0	0	0	5103	11944	-39698
NL3/1a	GW / opgw	0	0	0	0	0	0
Wind, 10°C	150C1F1	0	0	0	0	0	0
Permanent loads yg= 0.9	150C1F2	0	0	0	0	0	0
Wind angle: -45°	150C1F3	0	0	0	0	0	0
	380C2F1	14390	54457	147451	14387	36220	-116583
	380C2F2	14390	52025	142805	14387	35643	-115906
	380C2F3	14389	49010	137172	14387	34933	-115130
	RTG	0	0	0	3900	9503	-31218
NL3/1b	GW / opgw	0	0	0	0	0	0
Wind, -20°C	150C1F1	0	0	0	0	0	0
Permanent loads yg= 0.9	150C1F2	0	0	0	0	0	0
Wind angle: -45°	150C1F3	0	0	0	0	0	0
	380C2F1	14378	39904	131772	14378	35913	-128311
	380C2F2	14378	39373	131154	14378	35777	-128259
	380C2F3	14378	38721	130446	14378	35608	-128202
	RTG	0	0	0	3898	9436	-33909
NL3/3	GW / opgw	0	0	0	0	0	0
Wind, -5°C	150C1F1	0	0	0	0	0	0
Permanent loads yg= 0.9	150C1F2	0	0	0	0	0	0
Wind angle: -45°	150C1F3	0	0	0	0	0	0
	380C2F1	17493	56508	162964	17490	42566	-142884
	380C2F2	17493	54624	159739	17490	42121	-142492
	380C2F3	17492	52305	155912	17490	41571	-142048
	RTG	0	0	0	7441	16711	-55679
NL3/4	GW / opgw	0	0	0	0	0	0
Construction/maintenance, +5°C	150C1F1	0	0	0	0	0	0
Permanent loads yg= 0.9	150C1F2	0	0	0	0	0	0
Wind angle: -45°	150C1F3	0	0	0	0	0	0
	380C2F1	16793	40375	133522	16793	36620	-130948
	380C2F2	16793	39883	133049	16793	36489	-130914
	380C2F3	16793	39276	132512	16793	36325	-130878
	RTG	0	0	0	5103	10804	-39014

ZWW4HK450

Loadcases for tower strength (Special limit state)

		Ahead			Back		
Loadcase according to 50341-3-15	Att. Point	Vertical [N]	Transversal [N]	Longitudinal [N]	Vertical [N]	Transversal [N]	Longitudinal [N]
NL3/1a	GW / opgw	2604	5480	19563	0	0	0
Wind, 10°C	150C1F1	9593	19914	71831	0	0	0
Permanent loads yg= 1.2	150C1F2	9593	19859	71823	0	0	0
Wind angle: 0°	150C1F3	9593	19790	71816	0	0	0
	380C2F1	0	0	0	19186	39829	-143662
	380C2F2	0	0	0	19186	39719	-143647
	380C2F3	0	0	0	19186	39581	-143633
	RTG	0	0	0	5200	10767	-39047
NL3/1b	GW / opgw	2603	5872	21643	0	0	0
Wind, -20°C	150C1F1	9588	21778	80512	0	0	0
Permanent loads yg= 1.2	150C1F2	9588	21763	80514	0	0	0
Wind angle: 0°	150C1F3	9588	21743	80517	0	0	0
	380C2F1	0	0	0	19175	43557	-161025
	380C2F2	0	0	0	19175	43525	-161029
	380C2F3	0	0	0	19175	43486	-161034
	RTG	0	0	0	5198	11602	-42948
NL3/3	GW / opgw	4371	8769	31323	0	0	0
Wind, -5°C	150C1F1	11145	23525	85655	0	0	0
Permanent loads yg= 1.2	150C1F2	11145	23479	85654	0	0	0
Wind angle: 0°	150C1F3	11145	23421	85653	0	0	0
	380C2F1	0	0	0	22290	47050	-171311
	380C2F2	0	0	0	22290	46958	-171308
	380C2F3	0	0	0	22290	46842	-171307
	RTG	0	0	0	8742	17230	-62511
NL3/4	GW / opgw	3206	6409	23646	0	0	0
Construction/maintenance, +5°C	150C1F1	10796	21807	80617	0	0	0
Permanent loads yg= 1.2	150C1F2	10796	21791	80620	0	0	0
Wind angle: 0°	150C1F3	10796	21771	80623	0	0	0
	380C2F1	0	0	0	21593	43613	-161235
	380C2F2	0	0	0	21593	43582	-161239
	380C2F3	0	0	0	21593	43542	-161246
	RTG	0	0	0	6404	12748	-47227
NL3/1a	GW / opgw	2604	6303	20211	0	0	0
Wind, 10°C	150C1F1	9593	22078	73098	0	0	0
Permanent loads yg= 1.2	150C1F2	9593	21818	72869	0	0	0
Wind angle: 45°	150C1F3	9593	21498	72609	0	0	0
	380C2F1	0	0	0	19190	60346	-169423
	380C2F2	0	0	0	19190	58168	-165723
	380C2F3	0	0	0	19189	55482	-161318
	RTG	0	0	0	5201	15268	-44237
NL3/1b	GW / opgw	2603	6081	21676	0	0	0
Wind, -20°C	150C1F1	9588	22349	80547	0	0	0
Permanent loads yg= 1.2	150C1F2	9588	22284	80533	0	0	0
Wind angle: 45°	150C1F3	9588	22203	80520	0	0	0
	380C2F1	0	0	0	19176	48350	-163290
	380C2F2	0	0	0	19176	47875	-162880
	380C2F3	0	0	0	19176	47288	-162415
	RTG	0	0	0	5198	12669	-43363
NL3/3	GW / opgw	4371	10016	32147	0	0	0
Wind, -5°C	150C1F1	11145	25279	86353	0	0	0
Permanent loads yg= 1.2	150C1F2	11145	25073	86218	0	0	0
Wind angle: 45°	150C1F3	11145	24817	86067	0	0	0
	380C2F1	0	0	0	22293	63157	-187769
	380C2F2	0	0	0	22293	61462	-185250
	380C2F3	0	0	0	22292	59378	-182301
	RTG	0	0	0	8744	23926	-69220
NL3/4	GW / opgw	3206	6612	23658	0	0	0
Construction/maintenance, +5°C	150C1F1	10797	22369	80622	0	0	0
Permanent loads yg= 1.2	150C1F2	10797	22306	80613	0	0	0
Wind angle: 45°	150C1F3	10797	22227	80605	0	0	0
	380C2F1	0	0	0	21593	48258	-162938
	380C2F2	0	0	0	21593	47805	-162611
	380C2F3	0	0	0	21593	47244	-162244
	RTG	0	0	0	6404	13771	-47474
NL3/1a	GW / opgw	2605	10793	27912	0	0	0
Wind, 10°C	150C1F1	9596	33659	90909	0	0	0
Permanent loads yg= 1.2	150C1F2	9596	32226	88319	0	0	0
Wind angle: 90°	150C1F3	9595	30451	85191	0	0	0
	380C2F1	0	0	0	19192	67317	-181817
	380C2F2	0	0	0	19191	64452	-176637
	380C2F3	0	0	0	19190	60902	-170383
	RTG	0	0	0	5201	16808	-46877

NL3/1b	GW / opgw	2603	7075	22601	0	0	0
Wind, -20°C	150C1F1	9588	24937	82396	0	0	0
Permanent loads yg= 1.2	150C1F2	9588	24623	82071	0	0	0
Wind angle: 90°	150C1F3	9588	24236	81700	0	0	0
	380C2F1	0	0	0	19176	49874	-164792
	380C2F2	0	0	0	19176	49246	-164141
	380C2F3	0	0	0	19176	48471	-163400
	RTG	0	0	0	5198	13003	-43653
NL3/3	GW / opgw	4373	16605	42427	0	0	0
Wind, -5°C	150C1F1	11147	34309	98225	0	0	0
Permanent loads yg= 1.2	150C1F2	11147	33183	96390	0	0	0
Wind angle: 90°	150C1F3	11147	31795	94214	0	0	0
	380C2F1	0	0	0	22295	68618	-196450
	380C2F2	0	0	0	22294	66366	-192779
	380C2F3	0	0	0	22293	63590	-188429
	RTG	0	0	0	8745	26174	-72712
NL3/4	GW / opgw	3206	7532	24307	0	0	0
Construction/maintenance, +5°C	150C1F1	10797	24852	82073	0	0	0
Permanent loads yg= 1.2	150C1F2	10797	24555	81810	0	0	0
Wind angle: 90°	150C1F3	10797	24187	81513	0	0	0
	380C2F1	0	0	0	21594	49704	-164145
	380C2F2	0	0	0	21594	49109	-163620
	380C2F3	0	0	0	21593	48373	-163025
	RTG	0	0	0	6404	14081	-47676
NL3/1a	GW / opgw	2605	9462	25373	0	0	0
Wind, 10°C	150C1F1	9595	30173	84712	0	0	0
Permanent loads yg= 1.2	150C1F2	9595	29084	82861	0	0	0
Wind angle: -45°	150C1F3	9594	27741	80659	0	0	0
	380C2F1	0	0	0	19187	44156	-146196
	380C2F2	0	0	0	19186	43637	-145737
	380C2F3	0	0	0	19186	42996	-145217
	RTG	0	0	0	5200	11727	-39521
NL3/1b	GW / opgw	2603	6777	22237	0	0	0
Wind, -20°C	150C1F1	9588	24175	81645	0	0	0
Permanent loads yg= 1.2	150C1F2	9588	23938	81440	0	0	0
Wind angle: -45°	150C1F3	9588	23644	81208	0	0	0
	380C2F1	0	0	0	19175	44697	-161094
	380C2F2	0	0	0	19175	44568	-161067
	380C2F3	0	0	0	19175	44407	-161040
	RTG	0	0	0	5198	11859	-42953
NL3/3	GW / opgw	4373	14660	39007	0	0	0
Wind, -5°C	150C1F1	11146	31579	93885	0	0	0
Permanent loads yg= 1.2	150C1F2	11146	30731	92625	0	0	0
Wind angle: -45°	150C1F3	11146	29689	91151	0	0	0
	380C2F1	0	0	0	22290	50557	-172706
	380C2F2	0	0	0	22290	50145	-172436
	380C2F3	0	0	0	22290	49633	-172134
	RTG	0	0	0	8742	18696	-63083
NL3/4	GW / opgw	3206	7262	24043	0	0	0
Construction/maintenance, +5°C	150C1F1	10797	24129	81469	0	0	0
Permanent loads yg= 1.2	150C1F2	10797	23903	81305	0	0	0
Wind angle: -45°	150C1F3	10797	23622	81122	0	0	0
	380C2F1	0	0	0	21593	44738	-161243
	380C2F2	0	0	0	21593	44612	-161226
	380C2F3	0	0	0	21593	44453	-161210
	RTG	0	0	0	6404	13001	-47213
NL3/1a	GW / opgw	1953	4335	15291	0	0	0
Wind, 10°C	150C1F1	7193	15760	56325	0	0	0
Permanent loads yg= 0.9	150C1F2	7193	15702	56309	0	0	0
Wind angle: 0°	150C1F3	7193	15631	56292	0	0	0
	380C2F1	0	0	0	14386	31519	-112651
	380C2F2	0	0	0	14386	31405	-112618
	380C2F3	0	0	0	14386	31261	-112584
	RTG	0	0	0	3899	8469	-30469
NL3/1b	GW / opgw	1952	4654	17096	0	0	0
Wind, -20°C	150C1F1	7189	17366	64043	0	0	0
Permanent loads yg= 0.9	150C1F2	7189	17350	64044	0	0	0
Wind angle: 0°	150C1F3	7189	17329	64046	0	0	0
	380C2F1	0	0	0	14378	34731	-128087
	380C2F2	0	0	0	14378	34699	-128089
	380C2F3	0	0	0	14378	34659	-128092
	RTG	0	0	0	3898	9170	-33875

NL3/3	GW / opgw	3719	7753	27532	0	0	0
Wind, -5°C	150C1F1	8745	19427	70362	0	0	0
Permanent loads yg= 0.9	150C1F2	8745	19380	70356	0	0	0
Wind angle: 0°	150C1F3	8745	19320	70350	0	0	0
	380C2F1	0	0	0	17490	38854	-140725
	380C2F2	0	0	0	17490	38759	-140712
	380C2F3	0	0	0	17490	38641	-140701
	RTG	0	0	0	7440	15192	-54906
NL3/4	GW / opgw	2554	5309	19540	0	0	0
Construction/maintenance, +5°C	150C1F1	8396	17734	65417	0	0	0
Permanent loads yg= 0.9	150C1F2	8396	17718	65418	0	0	0
Wind angle: 0°	150C1F3	8396	17698	65421	0	0	0
	380C2F1	0	0	0	16793	35467	-130833
	380C2F2	0	0	0	16793	35436	-130837
	380C2F3	0	0	0	16793	35396	-130841
	RTG	0	0	0	5103	10547	-39011
NL3/1a	GW / opgw	1953	5242	16253	0	0	0
Wind, 10°C	150C1F1	7193	18110	58292	0	0	0
Permanent loads yg= 0.9	150C1F2	7193	17821	57953	0	0	0
Wind angle: 45°	150C1F3	7193	17467	57565	0	0	0
	380C2F1	0	0	0	14390	54457	-147451
	380C2F2	0	0	0	14390	52025	-142805
	380C2F3	0	0	0	14389	49010	-137172
	RTG	0	0	0	3900	13493	-37618
NL3/1b	GW / opgw	1952	4872	17166	0	0	0
Wind, -20°C	150C1F1	7189	17956	64156	0	0	0
Permanent loads yg= 0.9	150C1F2	7189	17889	64130	0	0	0
Wind angle: 45°	150C1F3	7189	17804	64101	0	0	0
	380C2F1	0	0	0	14378	39904	-131772
	380C2F2	0	0	0	14378	39373	-131154
	380C2F3	0	0	0	14378	38721	-130446
	RTG	0	0	0	3898	10312	-34566
NL3/3	GW / opgw	3719	9062	28588	0	0	0
Wind, -5°C	150C1F1	8745	21283	71442	0	0	0
Permanent loads yg= 0.9	150C1F2	8745	21060	71246	0	0	0
Wind angle: 45°	150C1F3	8745	20785	71024	0	0	0
	380C2F1	0	0	0	17493	56508	-162964
	380C2F2	0	0	0	17493	54624	-159739
	380C2F3	0	0	0	17492	52305	-155912
	RTG	0	0	0	7442	22289	-63115
NL3/4	GW / opgw	2554	5517	19572	0	0	0
Construction/maintenance, +5°C	150C1F1	8396	18310	65474	0	0	0
Permanent loads yg= 0.9	150C1F2	8396	18245	65457	0	0	0
Wind angle: 45°	150C1F3	8396	18163	65439	0	0	0
	380C2F1	0	0	0	16793	40375	-133522
	380C2F2	0	0	0	16793	39883	-133049
	380C2F3	0	0	0	16793	39276	-132512
	RTG	0	0	0	5103	11611	-39414
NL3/1a	GW / opgw	1954	10208	25731	0	0	0
Wind, 10°C	150C1F1	7196	31077	81279	0	0	0
Permanent loads yg= 0.9	150C1F2	7196	29503	78160	0	0	0
Wind angle: 90°	150C1F3	7195	27538	74322	0	0	0
	380C2F1	0	0	0	14392	62154	-162559
	380C2F2	0	0	0	14391	59006	-156320
	380C2F3	0	0	0	14390	55075	-148645
	RTG	0	0	0	3901	15214	-40930
NL3/1b	GW / opgw	1952	5983	18527	0	0	0
Wind, -20°C	150C1F1	7189	20810	66996	0	0	0
Permanent loads yg= 0.9	150C1F2	7189	20455	66519	0	0	0
Wind angle: 90°	150C1F3	7189	20020	65968	0	0	0
	380C2F1	0	0	0	14379	41620	-133992
	380C2F2	0	0	0	14379	40910	-133037
	380C2F3	0	0	0	14378	40039	-131936
	RTG	0	0	0	3898	10684	-34999
NL3/3	GW / opgw	3721	16048	40351	0	0	0
Wind, -5°C	150C1F1	8747	31276	86909	0	0	0
Permanent loads yg= 0.9	150C1F2	8747	30032	84636	0	0	0
Wind angle: 90°	150C1F3	8747	28495	81901	0	0	0
	380C2F1	0	0	0	17495	62552	-173818
	380C2F2	0	0	0	17494	60065	-169273
	380C2F3	0	0	0	17493	56989	-163802
	RTG	0	0	0	7443	24686	-67163

NL3/4	GW / opgw	2554	6506	20476	0	0	0
Construction/maintenance, +5°C	150C1F1	8397	20979	67619	0	0	0
Permanent loads yg= 0.9	150C1F2	8397	20652	67249	0	0	0
Wind angle: 90°	150C1F3	8397	20250	66824	0	0	0
	380C2F1	0	0	0	16793	41957	-135239
	380C2F2	0	0	0	16793	41304	-134497
	380C2F3	0	0	0	16793	40501	-133648
	RTG	0	0	0	5103	11944	-39698
NL3/1a	GW / opgw	1953	8771	22794	0	0	0
Wind, 10°C	150C1F1	7195	27228	73726	0	0	0
Permanent loads yg= 0.9	150C1F2	7195	26012	71402	0	0	0
Wind angle: -45°	150C1F3	7195	24505	68586	0	0	0
	380C2F1	0	0	0	14387	36220	-116583
	380C2F2	0	0	0	14387	35643	-115906
	380C2F3	0	0	0	14387	34933	-115130
	RTG	0	0	0	3900	9503	-31218
NL3/1b	GW / opgw	1952	5645	18010	0	0	0
Wind, -20°C	150C1F1	7189	19952	65886	0	0	0
Permanent loads yg= 0.9	150C1F2	7189	19687	65577	0	0	0
Wind angle: -45°	150C1F3	7189	19360	65223	0	0	0
	380C2F1	0	0	0	14378	35913	-128311
	380C2F2	0	0	0	14378	35777	-128259
	380C2F3	0	0	0	14378	35608	-128202
	RTG	0	0	0	3898	9436	-33909
NL3/3	GW / opgw	3721	14009	36576	0	0	0
Wind, -5°C	150C1F1	8747	28254	81482	0	0	0
Permanent loads yg= 0.9	150C1F2	8746	27312	79870	0	0	0
Wind angle: -45°	150C1F3	8746	26153	77956	0	0	0
	380C2F1	0	0	0	17490	42566	-142884
	380C2F2	0	0	0	17490	42121	-142492
	380C2F3	0	0	0	17490	41571	-142048
	RTG	0	0	0	7441	16711	-55679
NL3/4	GW / opgw	2554	6210	20120	0	0	0
Construction/maintenance, +5°C	150C1F1	8397	20188	66761	0	0	0
Permanent loads yg= 0.9	150C1F2	8397	19942	66524	0	0	0
Wind angle: -45°	150C1F3	8396	19638	66256	0	0	0
	380C2F1	0	0	0	16793	36620	-130948
	380C2F2	0	0	0	16793	36489	-130914
	380C2F3	0	0	0	16793	36325	-130878
	RTG	0	0	0	5103	10804	-39014

ZWW4HK450

Loadcases for tower strength (Special limit state)

		Ahead			Back		
Loadcase according to 50341-3-15	Att. Point	Vertical [N]	Transversal [N]	Longitudinal [N]	Vertical [N]	Transversal [N]	Longitudinal [N]
NL3/1a	GW / opgw	0	0	0	2604	5480	-19563
Wind, 10°C	150C1F1	0	0	0	9593	19914	-71831
Permanent loads yg= 1.2	150C1F2	0	0	0	9593	19859	-71823
Wind angle: 0°	150C1F3	0	0	0	9593	19790	-71816
	380C2F1	19186	39829	143662	19186	39829	-143662
	380C2F2	19186	39719	143647	19186	39719	-143647
	380C2F3	19186	39581	143633	19186	39581	-143633
	RTG	5200	10767	39047	5200	10767	-39047
NL3/1b	GW / opgw	0	0	0	2603	5872	-21643
Wind, -20°C	150C1F1	0	0	0	9588	21778	-80512
Permanent loads yg= 1.2	150C1F2	0	0	0	9588	21763	-80514
Wind angle: 0°	150C1F3	0	0	0	9588	21743	-80517
	380C2F1	19175	43557	161025	19175	43557	-161025
	380C2F2	19175	43525	161029	19175	43525	-161029
	380C2F3	19175	43486	161034	19175	43486	-161034
	RTG	5198	11602	42948	5198	11602	-42948
NL3/3	GW / opgw	0	0	0	4371	8769	-31323
Wind, -5°C	150C1F1	0	0	0	11145	23525	-85655
Permanent loads yg= 1.2	150C1F2	0	0	0	11145	23479	-85654
Wind angle: 0°	150C1F3	0	0	0	11145	23421	-85653
	380C2F1	22290	47050	171311	22290	47050	-171311
	380C2F2	22290	46958	171308	22290	46958	-171308
	380C2F3	22290	46842	171307	22290	46842	-171307
	RTG	8742	17230	62511	8742	17230	-62511
NL3/4	GW / opgw	0	0	0	3206	6409	-23646
Construction/maintenance, +5°C	150C1F1	0	0	0	10796	21807	-80617
Permanent loads yg= 1.2	150C1F2	0	0	0	10796	21791	-80620
Wind angle: 0°	150C1F3	0	0	0	10796	21771	-80623
	380C2F1	21593	43613	161235	21593	43613	-161235
	380C2F2	21593	43582	161239	21593	43582	-161239
	380C2F3	21593	43542	161246	21593	43542	-161246
	RTG	6404	12748	47227	6404	12748	-47227
NL3/1a	GW / opgw	0	0	0	2605	9462	-25373
Wind, 10°C	150C1F1	0	0	0	9595	30173	-84712
Permanent loads yg= 1.2	150C1F2	0	0	0	9595	29084	-82861
Wind angle: 45°	150C1F3	0	0	0	9594	27741	-80659
	380C2F1	19187	44156	146196	19190	60346	-169423
	380C2F2	19186	43637	145737	19190	58168	-165723
	380C2F3	19186	42996	145217	19189	55482	-161318
	RTG	5200	11727	39521	5201	15268	-44237
NL3/1b	GW / opgw	0	0	0	2603	6777	-22237
Wind, -20°C	150C1F1	0	0	0	9588	24175	-81645
Permanent loads yg= 1.2	150C1F2	0	0	0	9588	23938	-81440
Wind angle: 45°	150C1F3	0	0	0	9588	23644	-81208
	380C2F1	19175	44697	161094	19176	48350	-163290
	380C2F2	19175	44568	161067	19176	47875	-162880
	380C2F3	19175	44407	161040	19176	47288	-162415
	RTG	5198	11859	42953	5198	12669	-43363
NL3/3	GW / opgw	0	0	0	4373	14660	-39007
Wind, -5°C	150C1F1	0	0	0	11146	31579	-93885
Permanent loads yg= 1.2	150C1F2	0	0	0	11146	30731	-92625
Wind angle: 45°	150C1F3	0	0	0	11146	29689	-91151
	380C2F1	22290	50557	172706	22293	63157	-187769
	380C2F2	22290	50145	172436	22293	61462	-185250
	380C2F3	22290	49633	172134	22292	59378	-182301
	RTG	8742	18696	63083	8744	23926	-69220
NL3/4	GW / opgw	0	0	0	3206	7262	-24043
Construction/maintenance, +5°C	150C1F1	0	0	0	10797	24129	-81469
Permanent loads yg= 1.2	150C1F2	0	0	0	10797	23903	-81305
Wind angle: 45°	150C1F3	0	0	0	10797	23622	-81122
	380C2F1	21593	44738	161243	21593	48258	-162938
	380C2F2	21593	44612	161226	21593	47805	-162611
	380C2F3	21593	44453	161210	21593	47244	-162244
	RTG	6404	13001	47213	6404	13771	-47474
NL3/1a	GW / opgw	0	0	0	2605	10793	-27912
Wind, 10°C	150C1F1	0	0	0	9596	33659	-90909
Permanent loads yg= 1.2	150C1F2	0	0	0	9596	32226	-88319
Wind angle: 90°	150C1F3	0	0	0	9595	30451	-85191
	380C2F1	19192	67317	181817	19192	67317	-181817
	380C2F2	19191	64452	176637	19191	64452	-176637
	380C2F3	19190	60902	170383	19190	60902	-170383
	RTG	5201	16808	46877	5201	16808	-46877

NL3/1b	GW / opgw	0	0	0	2603	7075	-22601
Wind, -20°C	150C1F1	0	0	0	9588	24937	-82396
Permanent loads yg= 1.2	150C1F2	0	0	0	9588	24623	-82071
Wind angle: 90°	150C1F3	0	0	0	9588	24236	-81700
	380C2F1	19176	49874	164792	19176	49874	-164792
	380C2F2	19176	49246	164141	19176	49246	-164141
	380C2F3	19176	48471	163400	19176	48471	-163400
	RTG	5198	13003	43653	5198	13003	-43653
NL3/3	GW / opgw	0	0	0	4373	16605	-42427
Wind, -5°C	150C1F1	0	0	0	11147	34309	-98225
Permanent loads yg= 1.2	150C1F2	0	0	0	11147	33183	-96390
Wind angle: 90°	150C1F3	0	0	0	11147	31795	-94214
	380C2F1	22295	68618	196450	22295	68618	-196450
	380C2F2	22294	66366	192779	22294	66366	-192779
	380C2F3	22293	63590	188429	22293	63590	-188429
	RTG	8745	26174	72712	8745	26174	-72712
NL3/4	GW / opgw	0	0	0	3206	7532	-24307
Construction/maintenance, +5°C	150C1F1	0	0	0	10797	24852	-82073
Permanent loads yg= 1.2	150C1F2	0	0	0	10797	24555	-81810
Wind angle: 90°	150C1F3	0	0	0	10797	24187	-81513
	380C2F1	21594	49704	164145	21594	49704	-164145
	380C2F2	21594	49109	163620	21594	49109	-163620
	380C2F3	21593	48373	163025	21593	48373	-163025
	RTG	6404	14081	47676	6404	14081	-47676
NL3/1a	GW / opgw	0	0	0	2604	6303	-20211
Wind, 10°C	150C1F1	0	0	0	9593	22078	-73098
Permanent loads yg= 1.2	150C1F2	0	0	0	9593	21818	-72869
Wind angle: -45°	150C1F3	0	0	0	9593	21498	-72609
	380C2F1	19190	60346	169423	19187	44156	-146196
	380C2F2	19190	58168	165723	19186	43637	-145737
	380C2F3	19189	55482	161318	19186	42996	-145217
	RTG	5201	15268	44237	5200	11727	-39521
NL3/1b	GW / opgw	0	0	0	2603	6081	-21676
Wind, -20°C	150C1F1	0	0	0	9588	22349	-80547
Permanent loads yg= 1.2	150C1F2	0	0	0	9588	22284	-80533
Wind angle: -45°	150C1F3	0	0	0	9588	22203	-80520
	380C2F1	19176	48350	163290	19175	44697	-161094
	380C2F2	19176	47875	162880	19175	44568	-161067
	380C2F3	19176	47288	162415	19175	44407	-161040
	RTG	5198	12669	43363	5198	11859	-42953
NL3/3	GW / opgw	0	0	0	4371	10016	-32147
Wind, -5°C	150C1F1	0	0	0	11145	25279	-86353
Permanent loads yg= 1.2	150C1F2	0	0	0	11145	25073	-86218
Wind angle: -45°	150C1F3	0	0	0	11145	24817	-86067
	380C2F1	22293	63157	187769	22290	50557	-172706
	380C2F2	22293	61462	185250	22290	50145	-172436
	380C2F3	22292	59378	182301	22290	49633	-172134
	RTG	8744	23926	69220	8742	18696	-63083
NL3/4	GW / opgw	0	0	0	3206	6612	-23658
Construction/maintenance, +5°C	150C1F1	0	0	0	10797	22369	-80622
Permanent loads yg= 1.2	150C1F2	0	0	0	10797	22306	-80613
Wind angle: -45°	150C1F3	0	0	0	10797	22227	-80605
	380C2F1	21593	48258	162938	21593	44738	-161243
	380C2F2	21593	47805	162611	21593	44612	-161226
	380C2F3	21593	47244	162244	21593	44453	-161210
	RTG	6404	13771	47474	6404	13001	-47213
NL3/1a	GW / opgw	0	0	0	1953	4335	-15291
Wind, 10°C	150C1F1	0	0	0	7193	15760	-56325
Permanent loads yg= 0.9	150C1F2	0	0	0	7193	15702	-56309
Wind angle: 0°	150C1F3	0	0	0	7193	15631	-56292
	380C2F1	14386	31519	112651	14386	31519	-112651
	380C2F2	14386	31405	112618	14386	31405	-112618
	380C2F3	14386	31261	112584	14386	31261	-112584
	RTG	3899	8469	30469	3899	8469	-30469
NL3/1b	GW / opgw	0	0	0	1952	4654	-17096
Wind, -20°C	150C1F1	0	0	0	7189	17366	-64043
Permanent loads yg= 0.9	150C1F2	0	0	0	7189	17350	-64044
Wind angle: 0°	150C1F3	0	0	0	7189	17329	-64046
	380C2F1	14378	34731	128087	14378	34731	-128087
	380C2F2	14378	34699	128089	14378	34699	-128089
	380C2F3	14378	34659	128092	14378	34659	-128092
	RTG	3898	9170	33875	3898	9170	-33875

NL3/3	GW / opgw	0	0	0	3719	7753	-27532
Wind, -5°C	150C1F1	0	0	0	8745	19427	-70362
Permanent loads yg= 0.9	150C1F2	0	0	0	8745	19380	-70356
Wind angle: 0°	150C1F3	0	0	0	8745	19320	-70350
	380C2F1	17490	38854	140725	17490	38854	-140725
	380C2F2	17490	38759	140712	17490	38759	-140712
	380C2F3	17490	38641	140701	17490	38641	-140701
	RTG	7440	15192	54906	7440	15192	-54906
NL3/4	GW / opgw	0	0	0	2554	5309	-19540
Construction/maintenance, +5°C	150C1F1	0	0	0	8396	17734	-65417
Permanent loads yg= 0.9	150C1F2	0	0	0	8396	17718	-65418
Wind angle: 0°	150C1F3	0	0	0	8396	17698	-65421
	380C2F1	16793	35467	130833	16793	35467	-130833
	380C2F2	16793	35436	130837	16793	35436	-130837
	380C2F3	16793	35396	130841	16793	35396	-130841
	RTG	5103	10547	39011	5103	10547	-39011
NL3/1a	GW / opgw	0	0	0	1953	8771	-22794
Wind, 10°C	150C1F1	0	0	0	7195	27228	-73726
Permanent loads yg= 0.9	150C1F2	0	0	0	7195	26012	-71402
Wind angle: 45°	150C1F3	0	0	0	7195	24505	-68586
	380C2F1	14387	36220	116583	14390	54457	-147451
	380C2F2	14387	35643	115906	14390	52025	-142805
	380C2F3	14387	34933	115130	14389	49010	-137172
	RTG	3900	9503	31218	3900	13493	-37618
NL3/1b	GW / opgw	0	0	0	1952	5645	-18010
Wind, -20°C	150C1F1	0	0	0	7189	19952	-65886
Permanent loads yg= 0.9	150C1F2	0	0	0	7189	19687	-65577
Wind angle: 45°	150C1F3	0	0	0	7189	19360	-65223
	380C2F1	14378	35913	128311	14378	39904	-131772
	380C2F2	14378	35777	128259	14378	39373	-131154
	380C2F3	14378	35608	128202	14378	38721	-130446
	RTG	3898	9436	33909	3898	10312	-34566
NL3/3	GW / opgw	0	0	0	3721	14009	-36576
Wind, -5°C	150C1F1	0	0	0	8747	28254	-81482
Permanent loads yg= 0.9	150C1F2	0	0	0	8746	27312	-79870
Wind angle: 45°	150C1F3	0	0	0	8746	26153	-77956
	380C2F1	17490	42566	142884	17493	56508	-162964
	380C2F2	17490	42121	142492	17493	54624	-159739
	380C2F3	17490	41571	142048	17492	52305	-155912
	RTG	7441	16711	55679	7442	22289	-63115
NL3/4	GW / opgw	0	0	0	2554	6210	-20120
Construction/maintenance, +5°C	150C1F1	0	0	0	8397	20188	-66761
Permanent loads yg= 0.9	150C1F2	0	0	0	8397	19942	-66524
Wind angle: 45°	150C1F3	0	0	0	8396	19638	-66256
	380C2F1	16793	36620	130948	16793	40375	-133522
	380C2F2	16793	36489	130914	16793	39883	-133049
	380C2F3	16793	36325	130878	16793	39276	-132512
	RTG	5103	10804	39014	5103	11611	-39414
NL3/1a	GW / opgw	0	0	0	1954	10208	-25731
Wind, 10°C	150C1F1	0	0	0	7196	31077	-81279
Permanent loads yg= 0.9	150C1F2	0	0	0	7196	29503	-78160
Wind angle: 90°	150C1F3	0	0	0	7195	27538	-74322
	380C2F1	14392	62154	162559	14392	62154	-162559
	380C2F2	14391	59006	156320	14391	59006	-156320
	380C2F3	14390	55075	148645	14390	55075	-148645
	RTG	3901	15214	40930	3901	15214	-40930
NL3/1b	GW / opgw	0	0	0	1952	5983	-18527
Wind, -20°C	150C1F1	0	0	0	7189	20810	-66996
Permanent loads yg= 0.9	150C1F2	0	0	0	7189	20455	-66519
Wind angle: 90°	150C1F3	0	0	0	7189	20020	-65968
	380C2F1	14379	41620	133992	14379	41620	-133992
	380C2F2	14379	40910	133037	14379	40910	-133037
	380C2F3	14378	40039	131936	14378	40039	-131936
	RTG	3898	10684	34999	3898	10684	-34999
NL3/3	GW / opgw	0	0	0	3721	16048	-40351
Wind, -5°C	150C1F1	0	0	0	8747	31276	-86909
Permanent loads yg= 0.9	150C1F2	0	0	0	8747	30032	-84636
Wind angle: 90°	150C1F3	0	0	0	8747	28495	-81901
	380C2F1	17495	62552	173818	17495	62552	-173818
	380C2F2	17494	60065	169273	17494	60065	-169273
	380C2F3	17493	56989	163802	17493	56989	-163802
	RTG	7443	24686	67163	7443	24686	-67163

NL3/4	GW / opgw	0	0	0	2554	6506	-20476
Construction/maintenance, +5°C	150C1F1	0	0	0	8397	20979	-67619
Permanent loads yg= 0.9	150C1F2	0	0	0	8397	20652	-67249
Wind angle: 90°	150C1F3	0	0	0	8397	20250	-66824
	380C2F1	16793	41957	135239	16793	41957	-135239
	380C2F2	16793	41304	134497	16793	41304	-134497
	380C2F3	16793	40501	133648	16793	40501	-133648
	RTG	5103	11944	39698	5103	11944	-39698
NL3/1a	GW / opgw	0	0	0	1953	5242	-16253
Wind, 10°C	150C1F1	0	0	0	7193	18110	-58292
Permanent loads yg= 0.9	150C1F2	0	0	0	7193	17821	-57953
Wind angle: -45°	150C1F3	0	0	0	7193	17467	-57565
	380C2F1	14390	54457	147451	14387	36220	-116583
	380C2F2	14390	52025	142805	14387	35643	-115906
	380C2F3	14389	49010	137172	14387	34933	-115130
	RTG	3900	13493	37618	3900	9503	-31218
NL3/1b	GW / opgw	0	0	0	1952	4872	-17166
Wind, -20°C	150C1F1	0	0	0	7189	17956	-64156
Permanent loads yg= 0.9	150C1F2	0	0	0	7189	17889	-64130
Wind angle: -45°	150C1F3	0	0	0	7189	17804	-64101
	380C2F1	14378	39904	131772	14378	35913	-128311
	380C2F2	14378	39373	131154	14378	35777	-128259
	380C2F3	14378	38721	130446	14378	35608	-128202
	RTG	3898	10312	34566	3898	9436	-33909
NL3/3	GW / opgw	0	0	0	3719	9062	-28588
Wind, -5°C	150C1F1	0	0	0	8745	21283	-71442
Permanent loads yg= 0.9	150C1F2	0	0	0	8745	21060	-71246
Wind angle: -45°	150C1F3	0	0	0	8745	20785	-71024
	380C2F1	17493	56508	162964	17490	42566	-142884
	380C2F2	17493	54624	159739	17490	42121	-142492
	380C2F3	17492	52305	155912	17490	41571	-142048
	RTG	7442	22289	63115	7441	16711	-55679
NL3/4	GW / opgw	0	0	0	2554	5517	-19572
Construction/maintenance, +5°C	150C1F1	0	0	0	8396	18310	-65474
Permanent loads yg= 0.9	150C1F2	0	0	0	8396	18245	-65457
Wind angle: -45°	150C1F3	0	0	0	8396	18163	-65439
	380C2F1	16793	40375	133522	16793	36620	-130948
	380C2F2	16793	39883	133049	16793	36489	-130914
	380C2F3	16793	39276	132512	16793	36325	-130878
	RTG	5103	11611	39414	5103	10804	-39014

ZWW4HK450

Loadcases for tower strength (Special limit state)

		Ahead			Back		
Loadcase according to 50341-3-15	Att. Point	Vertical [N]	Transversal [N]	Longitudinal [N]	Vertical [N]	Transversal [N]	Longitudinal [N]
NL3/1a	GW / opgw	2604	5480	19563	2604	5480	-19563
Wind, 10°C	150C1F1	9593	19914	71831	9593	19914	-71831
Permanent loads yg= 1.2	150C1F2	9593	19859	71823	9593	19859	-71823
Wind angle: 0°	150C1F3	9593	19790	71816	9593	19790	-71816
	380C2F1	0	0	0	19186	39829	-143662
	380C2F2	0	0	0	19186	39719	-143647
	380C2F3	0	0	0	19186	39581	-143633
	RTG	0	0	0	5200	10767	-39047
NL3/1b	GW / opgw	2603	5872	21643	2603	5872	-21643
Wind, -20°C	150C1F1	9588	21778	80512	9588	21778	-80512
Permanent loads yg= 1.2	150C1F2	9588	21763	80514	9588	21763	-80514
Wind angle: 0°	150C1F3	9588	21743	80517	9588	21743	-80517
	380C2F1	0	0	0	19175	43557	-161025
	380C2F2	0	0	0	19175	43525	-161029
	380C2F3	0	0	0	19175	43486	-161034
	RTG	0	0	0	5198	11602	-42948
NL3/3	GW / opgw	4371	8769	31323	4371	8769	-31323
Wind, -5°C	150C1F1	11145	23525	85655	11145	23525	-85655
Permanent loads yg= 1.2	150C1F2	11145	23479	85654	11145	23479	-85654
Wind angle: 0°	150C1F3	11145	23421	85653	11145	23421	-85653
	380C2F1	0	0	0	22290	47050	-171311
	380C2F2	0	0	0	22290	46958	-171308
	380C2F3	0	0	0	22290	46842	-171307
	RTG	0	0	0	8742	17230	-62511
NL3/4	GW / opgw	3206	6409	23646	3206	6409	-23646
Construction/maintenance, +5°C	150C1F1	10796	21807	80617	10796	21807	-80617
Permanent loads yg= 1.2	150C1F2	10796	21791	80620	10796	21791	-80620
Wind angle: 0°	150C1F3	10796	21771	80623	10796	21771	-80623
	380C2F1	0	0	0	21593	43613	-161235
	380C2F2	0	0	0	21593	43582	-161239
	380C2F3	0	0	0	21593	43542	-161246
	RTG	0	0	0	6404	12748	-47227
NL3/1a	GW / opgw	2604	6303	20211	2605	9462	-25373
Wind, 10°C	150C1F1	9593	22078	73098	9595	30173	-84712
Permanent loads yg= 1.2	150C1F2	9593	21818	72869	9595	29084	-82861
Wind angle: 45°	150C1F3	9593	21498	72609	9594	27741	-80659
	380C2F1	0	0	0	19190	60346	-169423
	380C2F2	0	0	0	19190	58168	-165723
	380C2F3	0	0	0	19189	55482	-161318
	RTG	0	0	0	5201	15268	-44237
NL3/1b	GW / opgw	2603	6081	21676	2603	6777	-22237
Wind, -20°C	150C1F1	9588	22349	80547	9588	24175	-81645
Permanent loads yg= 1.2	150C1F2	9588	22284	80533	9588	23938	-81440
Wind angle: 45°	150C1F3	9588	22203	80520	9588	23644	-81208
	380C2F1	0	0	0	19176	48350	-163290
	380C2F2	0	0	0	19176	47875	-162880
	380C2F3	0	0	0	19176	47288	-162415
	RTG	0	0	0	5198	12669	-43363
NL3/3	GW / opgw	4371	10016	32147	4373	14660	-39007
Wind, -5°C	150C1F1	11145	25279	86353	11146	31579	-93885
Permanent loads yg= 1.2	150C1F2	11145	25073	86218	11146	30731	-92625
Wind angle: 45°	150C1F3	11145	24817	86067	11146	29689	-91151
	380C2F1	0	0	0	22293	63157	-187769
	380C2F2	0	0	0	22293	61462	-185250
	380C2F3	0	0	0	22292	59378	-182301
	RTG	0	0	0	8744	23926	-69220
NL3/4	GW / opgw	3206	6612	23658	3206	7262	-24043
Construction/maintenance, +5°C	150C1F1	10797	22369	80622	10797	24129	-81469
Permanent loads yg= 1.2	150C1F2	10797	22306	80613	10797	23903	-81305
Wind angle: 45°	150C1F3	10797	22227	80605	10797	23622	-81122
	380C2F1	0	0	0	21593	48258	-162938
	380C2F2	0	0	0	21593	47805	-162611
	380C2F3	0	0	0	21593	47244	-162244
	RTG	0	0	0	6404	13771	-47474
NL3/1a	GW / opgw	2605	10793	27912	2605	10793	-27912
Wind, 10°C	150C1F1	9596	33659	90909	9596	33659	-90909
Permanent loads yg= 1.2	150C1F2	9596	32226	88319	9596	32226	-88319
Wind angle: 90°	150C1F3	9595	30451	85191	9595	30451	-85191
	380C2F1	0	0	0	19192	67317	-181817
	380C2F2	0	0	0	19191	64452	-176637
	380C2F3	0	0	0	19190	60902	-170383
	RTG	0	0	0	5201	16808	-46877

NL3/1b	GW / opgw	2603	7075	22601	2603	7075	-22601
Wind, -20°C	150C1F1	9588	24937	82396	9588	24937	-82396
Permanent loads yg= 1.2	150C1F2	9588	24623	82071	9588	24623	-82071
Wind angle: 90°	150C1F3	9588	24236	81700	9588	24236	-81700
	380C2F1	0	0	0	19176	49874	-164792
	380C2F2	0	0	0	19176	49246	-164141
	380C2F3	0	0	0	19176	48471	-163400
	RTG	0	0	0	5198	13003	-43653
NL3/3	GW / opgw	4373	16605	42427	4373	16605	-42427
Wind, -5°C	150C1F1	11147	34309	98225	11147	34309	-98225
Permanent loads yg= 1.2	150C1F2	11147	33183	96390	11147	33183	-96390
Wind angle: 90°	150C1F3	11147	31795	94214	11147	31795	-94214
	380C2F1	0	0	0	22295	68618	-196450
	380C2F2	0	0	0	22294	66366	-192779
	380C2F3	0	0	0	22293	63590	-188429
	RTG	0	0	0	8745	26174	-72712
NL3/4	GW / opgw	3206	7532	24307	3206	7532	-24307
Construction/maintenance, +5°C	150C1F1	10797	24852	82073	10797	24852	-82073
Permanent loads yg= 1.2	150C1F2	10797	24555	81810	10797	24555	-81810
Wind angle: 90°	150C1F3	10797	24187	81513	10797	24187	-81513
	380C2F1	0	0	0	21594	49704	-164145
	380C2F2	0	0	0	21594	49109	-163620
	380C2F3	0	0	0	21593	48373	-163025
	RTG	0	0	0	6404	14081	-47676
NL3/1a	GW / opgw	2605	9462	25373	2604	6303	-20211
Wind, 10°C	150C1F1	9595	30173	84712	9593	22078	-73098
Permanent loads yg= 1.2	150C1F2	9595	29084	82861	9593	21818	-72869
Wind angle: -45°	150C1F3	9594	27741	80659	9593	21498	-72609
	380C2F1	0	0	0	19187	44156	-146196
	380C2F2	0	0	0	19186	43637	-145737
	380C2F3	0	0	0	19186	42996	-145217
	RTG	0	0	0	5200	11727	-39521
NL3/1b	GW / opgw	2603	6777	22237	2603	6081	-21676
Wind, -20°C	150C1F1	9588	24175	81645	9588	22349	-80547
Permanent loads yg= 1.2	150C1F2	9588	23938	81440	9588	22284	-80533
Wind angle: -45°	150C1F3	9588	23644	81208	9588	22203	-80520
	380C2F1	0	0	0	19175	44697	-161094
	380C2F2	0	0	0	19175	44568	-161067
	380C2F3	0	0	0	19175	44407	-161040
	RTG	0	0	0	5198	11859	-42953
NL3/3	GW / opgw	4373	14660	39007	4371	10016	-32147
Wind, -5°C	150C1F1	11146	31579	93885	11145	25279	-86353
Permanent loads yg= 1.2	150C1F2	11146	30731	92625	11145	25073	-86218
Wind angle: -45°	150C1F3	11146	29689	91151	11145	24817	-86067
	380C2F1	0	0	0	22290	50557	-172706
	380C2F2	0	0	0	22290	50145	-172436
	380C2F3	0	0	0	22290	49633	-172134
	RTG	0	0	0	8742	18696	-63083
NL3/4	GW / opgw	3206	7262	24043	3206	6612	-23658
Construction/maintenance, +5°C	150C1F1	10797	24129	81469	10797	22369	-80622
Permanent loads yg= 1.2	150C1F2	10797	23903	81305	10797	22306	-80613
Wind angle: -45°	150C1F3	10797	23622	81122	10797	22227	-80605
	380C2F1	0	0	0	21593	44738	-161243
	380C2F2	0	0	0	21593	44612	-161226
	380C2F3	0	0	0	21593	44453	-161210
	RTG	0	0	0	6404	13001	-47213
NL3/1a	GW / opgw	1953	4335	15291	1953	4335	-15291
Wind, 10°C	150C1F1	7193	15760	56325	7193	15760	-56325
Permanent loads yg= 0.9	150C1F2	7193	15702	56309	7193	15702	-56309
Wind angle: 0°	150C1F3	7193	15631	56292	7193	15631	-56292
	380C2F1	0	0	0	14386	31519	-112651
	380C2F2	0	0	0	14386	31405	-112618
	380C2F3	0	0	0	14386	31261	-112584
	RTG	0	0	0	3899	8469	-30469
NL3/1b	GW / opgw	1952	4654	17096	1952	4654	-17096
Wind, -20°C	150C1F1	7189	17366	64043	7189	17366	-64043
Permanent loads yg= 0.9	150C1F2	7189	17350	64044	7189	17350	-64044
Wind angle: 0°	150C1F3	7189	17329	64046	7189	17329	-64046
	380C2F1	0	0	0	14378	34731	-128087
	380C2F2	0	0	0	14378	34699	-128089
	380C2F3	0	0	0	14378	34659	-128092
	RTG	0	0	0	3898	9170	-33875

NL3/3	GW / opgw	3719	7753	27532	3719	7753	-27532
Wind, -5°C	150C1F1	8745	19427	70362	8745	19427	-70362
Permanent loads yg= 0.9	150C1F2	8745	19380	70356	8745	19380	-70356
Wind angle: 0°	150C1F3	8745	19320	70350	8745	19320	-70350
	380C2F1	0	0	0	17490	38854	-140725
	380C2F2	0	0	0	17490	38759	-140712
	380C2F3	0	0	0	17490	38641	-140701
	RTG	0	0	0	7440	15192	-54906
NL3/4	GW / opgw	2554	5309	19540	2554	5309	-19540
Construction/maintenance, +5°C	150C1F1	8396	17734	65417	8396	17734	-65417
Permanent loads yg= 0.9	150C1F2	8396	17718	65418	8396	17718	-65418
Wind angle: 0°	150C1F3	8396	17698	65421	8396	17698	-65421
	380C2F1	0	0	0	16793	35467	-130833
	380C2F2	0	0	0	16793	35436	-130837
	380C2F3	0	0	0	16793	35396	-130841
	RTG	0	0	0	5103	10547	-39011
NL3/1a	GW / opgw	1953	5242	16253	1953	8771	-22794
Wind, 10°C	150C1F1	7193	18110	58292	7195	27228	-73726
Permanent loads yg= 0.9	150C1F2	7193	17821	57953	7195	26012	-71402
Wind angle: 45°	150C1F3	7193	17467	57565	7195	24505	-68586
	380C2F1	0	0	0	14390	54457	-147451
	380C2F2	0	0	0	14390	52025	-142805
	380C2F3	0	0	0	14389	49010	-137172
	RTG	0	0	0	3900	13493	-37618
NL3/1b	GW / opgw	1952	4872	17166	1952	5645	-18010
Wind, -20°C	150C1F1	7189	17956	64156	7189	19952	-65886
Permanent loads yg= 0.9	150C1F2	7189	17889	64130	7189	19687	-65577
Wind angle: 45°	150C1F3	7189	17804	64101	7189	19360	-65223
	380C2F1	0	0	0	14378	39904	-131772
	380C2F2	0	0	0	14378	39373	-131154
	380C2F3	0	0	0	14378	38721	-130446
	RTG	0	0	0	3898	10312	-34566
NL3/3	GW / opgw	3719	9062	28588	3721	14009	-36576
Wind, -5°C	150C1F1	8745	21283	71442	8747	28254	-81482
Permanent loads yg= 0.9	150C1F2	8745	21060	71246	8746	27312	-79870
Wind angle: 45°	150C1F3	8745	20785	71024	8746	26153	-77956
	380C2F1	0	0	0	17493	56508	-162964
	380C2F2	0	0	0	17493	54624	-159739
	380C2F3	0	0	0	17492	52305	-155912
	RTG	0	0	0	7442	22289	-63115
NL3/4	GW / opgw	2554	5517	19572	2554	6210	-20120
Construction/maintenance, +5°C	150C1F1	8396	18310	65474	8397	20188	-66761
Permanent loads yg= 0.9	150C1F2	8396	18245	65457	8397	19942	-66524
Wind angle: 45°	150C1F3	8396	18163	65439	8396	19638	-66256
	380C2F1	0	0	0	16793	40375	-133522
	380C2F2	0	0	0	16793	39883	-133049
	380C2F3	0	0	0	16793	39276	-132512
	RTG	0	0	0	5103	11611	-39414
NL3/1a	GW / opgw	1954	10208	25731	1954	10208	-25731
Wind, 10°C	150C1F1	7196	31077	81279	7196	31077	-81279
Permanent loads yg= 0.9	150C1F2	7196	29503	78160	7196	29503	-78160
Wind angle: 90°	150C1F3	7195	27538	74322	7195	27538	-74322
	380C2F1	0	0	0	14392	62154	-162559
	380C2F2	0	0	0	14391	59006	-156320
	380C2F3	0	0	0	14390	55075	-148645
	RTG	0	0	0	3901	15214	-40930
NL3/1b	GW / opgw	1952	5983	18527	1952	5983	-18527
Wind, -20°C	150C1F1	7189	20810	66996	7189	20810	-66996
Permanent loads yg= 0.9	150C1F2	7189	20455	66519	7189	20455	-66519
Wind angle: 90°	150C1F3	7189	20020	65968	7189	20020	-65968
	380C2F1	0	0	0	14379	41620	-133992
	380C2F2	0	0	0	14379	40910	-133037
	380C2F3	0	0	0	14378	40039	-131936
	RTG	0	0	0	3898	10684	-34999
NL3/3	GW / opgw	3721	16048	40351	3721	16048	-40351
Wind, -5°C	150C1F1	8747	31276	86909	8747	31276	-86909
Permanent loads yg= 0.9	150C1F2	8747	30032	84636	8747	30032	-84636
Wind angle: 90°	150C1F3	8747	28495	81901	8747	28495	-81901
	380C2F1	0	0	0	17495	62552	-173818
	380C2F2	0	0	0	17494	60065	-169273
	380C2F3	0	0	0	17493	56989	-163802
	RTG	0	0	0	7443	24686	-67163

NL3/4	GW / opgw	2554	6506	20476	2554	6506	-20476
Construction/maintenance, +5°C	150C1F1	8397	20979	67619	8397	20979	-67619
Permanent loads yg= 0.9	150C1F2	8397	20652	67249	8397	20652	-67249
Wind angle: 90°	150C1F3	8397	20250	66824	8397	20250	-66824
	380C2F1	0	0	0	16793	41957	-135239
	380C2F2	0	0	0	16793	41304	-134497
	380C2F3	0	0	0	16793	40501	-133648
	RTG	0	0	0	5103	11944	-39698
NL3/1a	GW / opgw	1953	8771	22794	1953	5242	-16253
Wind, 10°C	150C1F1	7195	27228	73726	7193	18110	-58292
Permanent loads yg= 0.9	150C1F2	7195	26012	71402	7193	17821	-57953
Wind angle: -45°	150C1F3	7195	24505	68586	7193	17467	-57565
	380C2F1	0	0	0	14387	36220	-116583
	380C2F2	0	0	0	14387	35643	-115906
	380C2F3	0	0	0	14387	34933	-115130
	RTG	0	0	0	3900	9503	-31218
NL3/1b	GW / opgw	1952	5645	18010	1952	4872	-17166
Wind, -20°C	150C1F1	7189	19952	65886	7189	17956	-64156
Permanent loads yg= 0.9	150C1F2	7189	19687	65577	7189	17889	-64130
Wind angle: -45°	150C1F3	7189	19360	65223	7189	17804	-64101
	380C2F1	0	0	0	14378	35913	-128311
	380C2F2	0	0	0	14378	35777	-128259
	380C2F3	0	0	0	14378	35608	-128202
	RTG	0	0	0	3898	9436	-33909
NL3/3	GW / opgw	3721	14009	36576	3719	9062	-28588
Wind, -5°C	150C1F1	8747	28254	81482	8745	21283	-71442
Permanent loads yg= 0.9	150C1F2	8746	27312	79870	8745	21060	-71246
Wind angle: -45°	150C1F3	8746	26153	77956	8745	20785	-71024
	380C2F1	0	0	0	17490	42566	-142884
	380C2F2	0	0	0	17490	42121	-142492
	380C2F3	0	0	0	17490	41571	-142048
	RTG	0	0	0	7441	16711	-55679
NL3/4	GW / opgw	2554	6210	20120	2554	5517	-19572
Construction/maintenance, +5°C	150C1F1	8397	20188	66761	8396	18310	-65474
Permanent loads yg= 0.9	150C1F2	8397	19942	66524	8396	18245	-65457
Wind angle: -45°	150C1F3	8396	19638	66256	8396	18163	-65439
	380C2F1	0	0	0	16793	36620	-130948
	380C2F2	0	0	0	16793	36489	-130914
	380C2F3	0	0	0	16793	36325	-130878
	RTG	0	0	0	5103	10804	-39014

ZWW4HK450

Loadcases for tower strength (Special limit state)

		Ahead			Back		
Loadcase according to 50341-3-15	Att. Point	Vertical [N]	Transversal [N]	Longitudinal [N]	Vertical [N]	Transversal [N]	Longitudinal [N]
NL3/1a	GW / opgw	2604	5480	19563	0	0	0
Wind, 10°C	150C1F1	9593	19914	71831	0	0	0
Permanent loads yg= 1.2	150C1F2	9593	19859	71823	0	0	0
Wind angle: 0°	150C1F3	9593	19790	71816	0	0	0
	380C2F1	19186	39829	143662	19186	39829	-143662
	380C2F2	19186	39719	143647	19186	39719	-143647
	380C2F3	19186	39581	143633	19186	39581	-143633
	RTG	0	0	0	5200	10767	-39047
NL3/1b	GW / opgw	2603	5872	21643	0	0	0
Wind, -20°C	150C1F1	9588	21778	80512	0	0	0
Permanent loads yg= 1.2	150C1F2	9588	21763	80514	0	0	0
Wind angle: 0°	150C1F3	9588	21743	80517	0	0	0
	380C2F1	19175	43557	161025	19175	43557	-161025
	380C2F2	19175	43525	161029	19175	43525	-161029
	380C2F3	19175	43486	161034	19175	43486	-161034
	RTG	0	0	0	5198	11602	-42948
NL3/3	GW / opgw	4371	8769	31323	0	0	0
Wind, -5°C	150C1F1	11145	23525	85655	0	0	0
Permanent loads yg= 1.2	150C1F2	11145	23479	85654	0	0	0
Wind angle: 0°	150C1F3	11145	23421	85653	0	0	0
	380C2F1	22290	47050	171311	22290	47050	-171311
	380C2F2	22290	46958	171308	22290	46958	-171308
	380C2F3	22290	46842	171307	22290	46842	-171307
	RTG	0	0	0	8742	17230	-62511
NL3/4	GW / opgw	3206	6409	23646	0	0	0
Construction/maintenance, +5°C	150C1F1	10796	21807	80617	0	0	0
Permanent loads yg= 1.2	150C1F2	10796	21791	80620	0	0	0
Wind angle: 0°	150C1F3	10796	21771	80623	0	0	0
	380C2F1	21593	43613	161235	21593	43613	-161235
	380C2F2	21593	43582	161239	21593	43582	-161239
	380C2F3	21593	43542	161246	21593	43542	-161246
	RTG	0	0	0	6404	12748	-47227
NL3/1a	GW / opgw	2604	6303	20211	0	0	0
Wind, 10°C	150C1F1	9593	22078	73098	0	0	0
Permanent loads yg= 1.2	150C1F2	9593	21818	72869	0	0	0
Wind angle: 45°	150C1F3	9593	21498	72609	0	0	0
	380C2F1	19187	44156	146196	19190	60346	-169423
	380C2F2	19186	43637	145737	19190	58168	-165723
	380C2F3	19186	42996	145217	19189	55482	-161318
	RTG	0	0	0	5201	15268	-44237
NL3/1b	GW / opgw	2603	6081	21676	0	0	0
Wind, -20°C	150C1F1	9588	22349	80547	0	0	0
Permanent loads yg= 1.2	150C1F2	9588	22284	80533	0	0	0
Wind angle: 45°	150C1F3	9588	22203	80520	0	0	0
	380C2F1	19175	44697	161094	19176	48350	-163290
	380C2F2	19175	44568	161067	19176	47875	-162880
	380C2F3	19175	44407	161040	19176	47288	-162415
	RTG	0	0	0	5198	12669	-43363
NL3/3	GW / opgw	4371	10016	32147	0	0	0
Wind, -5°C	150C1F1	11145	25279	86353	0	0	0
Permanent loads yg= 1.2	150C1F2	11145	25073	86218	0	0	0
Wind angle: 45°	150C1F3	11145	24817	86067	0	0	0
	380C2F1	22290	50557	172706	22293	63157	-187769
	380C2F2	22290	50145	172436	22293	61462	-185250
	380C2F3	22290	49633	172134	22292	59378	-182301
	RTG	0	0	0	8744	23926	-69220
NL3/4	GW / opgw	3206	6612	23658	0	0	0
Construction/maintenance, +5°C	150C1F1	10797	22369	80622	0	0	0
Permanent loads yg= 1.2	150C1F2	10797	22306	80613	0	0	0
Wind angle: 45°	150C1F3	10797	22227	80605	0	0	0
	380C2F1	21593	44738	161243	21593	48258	-162938
	380C2F2	21593	44612	161226	21593	47805	-162611
	380C2F3	21593	44453	161210	21593	47244	-162244
	RTG	0	0	0	6404	13771	-47474
NL3/1a	GW / opgw	2605	10793	27912	0	0	0
Wind, 10°C	150C1F1	9596	33659	90909	0	0	0
Permanent loads yg= 1.2	150C1F2	9596	32226	88319	0	0	0
Wind angle: 90°	150C1F3	9595	30451	85191	0	0	0
	380C2F1	19192	67317	181817	19192	67317	-181817
	380C2F2	19191	64452	176637	19191	64452	-176637
	380C2F3	19190	60902	170383	19190	60902	-170383
	RTG	0	0	0	5201	16808	-46877

NL3/1b	GW / opgw	2603	7075	22601	0	0	0
Wind, -20°C	150C1F1	9588	24937	82396	0	0	0
Permanent loads yg= 1.2	150C1F2	9588	24623	82071	0	0	0
Wind angle: 90°	150C1F3	9588	24236	81700	0	0	0
	380C2F1	19176	49874	164792	19176	49874	-164792
	380C2F2	19176	49246	164141	19176	49246	-164141
	380C2F3	19176	48471	163400	19176	48471	-163400
	RTG	0	0	0	5198	13003	-43653
NL3/3	GW / opgw	4373	16605	42427	0	0	0
Wind, -5°C	150C1F1	11147	34309	98225	0	0	0
Permanent loads yg= 1.2	150C1F2	11147	33183	96390	0	0	0
Wind angle: 90°	150C1F3	11147	31795	94214	0	0	0
	380C2F1	22295	68618	196450	22295	68618	-196450
	380C2F2	22294	66366	192779	22294	66366	-192779
	380C2F3	22293	63590	188429	22293	63590	-188429
	RTG	0	0	0	8745	26174	-72712
NL3/4	GW / opgw	3206	7532	24307	0	0	0
Construction/maintenance, +5°C	150C1F1	10797	24852	82073	0	0	0
Permanent loads yg= 1.2	150C1F2	10797	24555	81810	0	0	0
Wind angle: 90°	150C1F3	10797	24187	81513	0	0	0
	380C2F1	21594	49704	164145	21594	49704	-164145
	380C2F2	21594	49109	163620	21594	49109	-163620
	380C2F3	21593	48373	163025	21593	48373	-163025
	RTG	0	0	0	6404	14081	-47676
NL3/1a	GW / opgw	2605	9462	25373	0	0	0
Wind, 10°C	150C1F1	9595	30173	84712	0	0	0
Permanent loads yg= 1.2	150C1F2	9595	29084	82861	0	0	0
Wind angle: -45°	150C1F3	9594	27741	80659	0	0	0
	380C2F1	19190	60346	169423	19187	44156	-146196
	380C2F2	19190	58168	165723	19186	43637	-145737
	380C2F3	19189	55482	161318	19186	42996	-145217
	RTG	0	0	0	5200	11727	-39521
NL3/1b	GW / opgw	2603	6777	22237	0	0	0
Wind, -20°C	150C1F1	9588	24175	81645	0	0	0
Permanent loads yg= 1.2	150C1F2	9588	23938	81440	0	0	0
Wind angle: -45°	150C1F3	9588	23644	81208	0	0	0
	380C2F1	19176	48350	163290	19175	44697	-161094
	380C2F2	19176	47875	162880	19175	44568	-161067
	380C2F3	19176	47288	162415	19175	44407	-161040
	RTG	0	0	0	5198	11859	-42953
NL3/3	GW / opgw	4373	14660	39007	0	0	0
Wind, -5°C	150C1F1	11146	31579	93885	0	0	0
Permanent loads yg= 1.2	150C1F2	11146	30731	92625	0	0	0
Wind angle: -45°	150C1F3	11146	29689	91151	0	0	0
	380C2F1	22293	63157	187769	22290	50557	-172706
	380C2F2	22293	61462	185250	22290	50145	-172436
	380C2F3	22292	59378	182301	22290	49633	-172134
	RTG	0	0	0	8742	18696	-63083
NL3/4	GW / opgw	3206	7262	24043	0	0	0
Construction/maintenance, +5°C	150C1F1	10797	24129	81469	0	0	0
Permanent loads yg= 1.2	150C1F2	10797	23903	81305	0	0	0
Wind angle: -45°	150C1F3	10797	23622	81122	0	0	0
	380C2F1	21593	48258	162938	21593	44738	-161243
	380C2F2	21593	47805	162611	21593	44612	-161226
	380C2F3	21593	47244	162244	21593	44453	-161210
	RTG	0	0	0	6404	13001	-47213
NL3/1a	GW / opgw	1953	4335	15291	0	0	0
Wind, 10°C	150C1F1	7193	15760	56325	0	0	0
Permanent loads yg= 0.9	150C1F2	7193	15702	56309	0	0	0
Wind angle: 0°	150C1F3	7193	15631	56292	0	0	0
	380C2F1	14386	31519	112651	14386	31519	-112651
	380C2F2	14386	31405	112618	14386	31405	-112618
	380C2F3	14386	31261	112584	14386	31261	-112584
	RTG	0	0	0	3899	8469	-30469
NL3/1b	GW / opgw	1952	4654	17096	0	0	0
Wind, -20°C	150C1F1	7189	17366	64043	0	0	0
Permanent loads yg= 0.9	150C1F2	7189	17350	64044	0	0	0
Wind angle: 0°	150C1F3	7189	17329	64046	0	0	0
	380C2F1	14378	34731	128087	14378	34731	-128087
	380C2F2	14378	34699	128089	14378	34699	-128089
	380C2F3	14378	34659	128092	14378	34659	-128092
	RTG	0	0	0	3898	9170	-33875

NL3/3	GW / opgw	3719	7753	27532	0	0	0
Wind, -5°C	150C1F1	8745	19427	70362	0	0	0
Permanent loads yg= 0.9	150C1F2	8745	19380	70356	0	0	0
Wind angle: 0°	150C1F3	8745	19320	70350	0	0	0
	380C2F1	17490	38854	140725	17490	38854	-140725
	380C2F2	17490	38759	140712	17490	38759	-140712
	380C2F3	17490	38641	140701	17490	38641	-140701
	RTG	0	0	0	7440	15192	-54906
NL3/4	GW / opgw	2554	5309	19540	0	0	0
Construction/maintenance, +5°C	150C1F1	8396	17734	65417	0	0	0
Permanent loads yg= 0.9	150C1F2	8396	17718	65418	0	0	0
Wind angle: 0°	150C1F3	8396	17698	65421	0	0	0
	380C2F1	16793	35467	130833	16793	35467	-130833
	380C2F2	16793	35436	130837	16793	35436	-130837
	380C2F3	16793	35396	130841	16793	35396	-130841
	RTG	0	0	0	5103	10547	-39011
NL3/1a	GW / opgw	1953	5242	16253	0	0	0
Wind, 10°C	150C1F1	7193	18110	58292	0	0	0
Permanent loads yg= 0.9	150C1F2	7193	17821	57953	0	0	0
Wind angle: 45°	150C1F3	7193	17467	57565	0	0	0
	380C2F1	14387	36220	116583	14390	54457	-147451
	380C2F2	14387	35643	115906	14390	52025	-142805
	380C2F3	14387	34933	115130	14389	49010	-137172
	RTG	0	0	0	3900	13493	-37618
NL3/1b	GW / opgw	1952	4872	17166	0	0	0
Wind, -20°C	150C1F1	7189	17956	64156	0	0	0
Permanent loads yg= 0.9	150C1F2	7189	17889	64130	0	0	0
Wind angle: 45°	150C1F3	7189	17804	64101	0	0	0
	380C2F1	14378	35913	128311	14378	39904	-131772
	380C2F2	14378	35777	128259	14378	39373	-131154
	380C2F3	14378	35608	128202	14378	38721	-130446
	RTG	0	0	0	3898	10312	-34566
NL3/3	GW / opgw	3719	9062	28588	0	0	0
Wind, -5°C	150C1F1	8745	21283	71442	0	0	0
Permanent loads yg= 0.9	150C1F2	8745	21060	71246	0	0	0
Wind angle: 45°	150C1F3	8745	20785	71024	0	0	0
	380C2F1	17490	42566	142884	17493	56508	-162964
	380C2F2	17490	42121	142492	17493	54624	-159739
	380C2F3	17490	41571	142048	17492	52305	-155912
	RTG	0	0	0	7442	22289	-63115
NL3/4	GW / opgw	2554	5517	19572	0	0	0
Construction/maintenance, +5°C	150C1F1	8396	18310	65474	0	0	0
Permanent loads yg= 0.9	150C1F2	8396	18245	65457	0	0	0
Wind angle: 45°	150C1F3	8396	18163	65439	0	0	0
	380C2F1	16793	36620	130948	16793	40375	-133522
	380C2F2	16793	36489	130914	16793	39883	-133049
	380C2F3	16793	36325	130878	16793	39276	-132512
	RTG	0	0	0	5103	11611	-39414
NL3/1a	GW / opgw	1954	10208	25731	0	0	0
Wind, 10°C	150C1F1	7196	31077	81279	0	0	0
Permanent loads yg= 0.9	150C1F2	7196	29503	78160	0	0	0
Wind angle: 90°	150C1F3	7195	27538	74322	0	0	0
	380C2F1	14392	62154	162559	14392	62154	-162559
	380C2F2	14391	59006	156320	14391	59006	-156320
	380C2F3	14390	55075	148645	14390	55075	-148645
	RTG	0	0	0	3901	15214	-40930
NL3/1b	GW / opgw	1952	5983	18527	0	0	0
Wind, -20°C	150C1F1	7189	20810	66996	0	0	0
Permanent loads yg= 0.9	150C1F2	7189	20455	66519	0	0	0
Wind angle: 90°	150C1F3	7189	20020	65968	0	0	0
	380C2F1	14379	41620	133992	14379	41620	-133992
	380C2F2	14379	40910	133037	14379	40910	-133037
	380C2F3	14378	40039	131936	14378	40039	-131936
	RTG	0	0	0	3898	10684	-34999
NL3/3	GW / opgw	3721	16048	40351	0	0	0
Wind, -5°C	150C1F1	8747	31276	86909	0	0	0
Permanent loads yg= 0.9	150C1F2	8747	30032	84636	0	0	0
Wind angle: 90°	150C1F3	8747	28495	81901	0	0	0
	380C2F1	17495	62552	173818	17495	62552	-173818
	380C2F2	17494	60065	169273	17494	60065	-169273
	380C2F3	17493	56989	163802	17493	56989	-163802
	RTG	0	0	0	7443	24686	-67163

NL3/4	GW / opgw	2554	6506	20476	0	0	0
Construction/maintenance, +5°C	150C1F1	8397	20979	67619	0	0	0
Permanent loads yg= 0.9	150C1F2	8397	20652	67249	0	0	0
Wind angle: 90°	150C1F3	8397	20250	66824	0	0	0
	380C2F1	16793	41957	135239	16793	41957	-135239
	380C2F2	16793	41304	134497	16793	41304	-134497
	380C2F3	16793	40501	133648	16793	40501	-133648
	RTG	0	0	0	5103	11944	-39698
NL3/1a	GW / opgw	1953	8771	22794	0	0	0
Wind, 10°C	150C1F1	7195	27228	73726	0	0	0
Permanent loads yg= 0.9	150C1F2	7195	26012	71402	0	0	0
Wind angle: -45°	150C1F3	7195	24505	68586	0	0	0
	380C2F1	14390	54457	147451	14387	36220	-116583
	380C2F2	14390	52025	142805	14387	35643	-115906
	380C2F3	14389	49010	137172	14387	34933	-115130
	RTG	0	0	0	3900	9503	-31218
NL3/1b	GW / opgw	1952	5645	18010	0	0	0
Wind, -20°C	150C1F1	7189	19952	65886	0	0	0
Permanent loads yg= 0.9	150C1F2	7189	19687	65577	0	0	0
Wind angle: -45°	150C1F3	7189	19360	65223	0	0	0
	380C2F1	14378	39904	131772	14378	35913	-128311
	380C2F2	14378	39373	131154	14378	35777	-128259
	380C2F3	14378	38721	130446	14378	35608	-128202
	RTG	0	0	0	3898	9436	-33909
NL3/3	GW / opgw	3721	14009	36576	0	0	0
Wind, -5°C	150C1F1	8747	28254	81482	0	0	0
Permanent loads yg= 0.9	150C1F2	8746	27312	79870	0	0	0
Wind angle: -45°	150C1F3	8746	26153	77956	0	0	0
	380C2F1	17493	56508	162964	17490	42566	-142884
	380C2F2	17493	54624	159739	17490	42121	-142492
	380C2F3	17492	52305	155912	17490	41571	-142048
	RTG	0	0	0	7441	16711	-55679
NL3/4	GW / opgw	2554	6210	20120	0	0	0
Construction/maintenance, +5°C	150C1F1	8397	20188	66761	0	0	0
Permanent loads yg= 0.9	150C1F2	8397	19942	66524	0	0	0
Wind angle: -45°	150C1F3	8396	19638	66256	0	0	0
	380C2F1	16793	40375	133522	16793	36620	-130948
	380C2F2	16793	39883	133049	16793	36489	-130914
	380C2F3	16793	39276	132512	16793	36325	-130878
	RTG	0	0	0	5103	10804	-39014

ZWW4HK450

Loadcases for tower strength (Special limit state)

		Ahead			Back		
Loadcase according to 50341-3-15	Att. Point	Vertical [N]	Transversal [N]	Longitudinal [N]	Vertical [N]	Transversal [N]	Longitudinal [N]
NL3/1a	GW / opgw	2604	5480	19563	2604	5480	-19563
Wind, 10°C	150C1F1	9593	19914	71831	9593	19914	-71831
Permanent loads yg= 1.2	150C1F2	9593	19859	71823	9593	19859	-71823
Wind angle: 0°	150C1F3	9593	19790	71816	9593	19790	-71816
	380C2F1	19186	39829	143662	19186	39829	-143662
	380C2F2	19186	39719	143647	19186	39719	-143647
	380C2F3	19186	39581	143633	19186	39581	-143633
	RTG	0	0	0	5200	10767	-39047
NL3/1b	GW / opgw	2603	5872	21643	2603	5872	-21643
Wind, -20°C	150C1F1	9588	21778	80512	9588	21778	-80512
Permanent loads yg= 1.2	150C1F2	9588	21763	80514	9588	21763	-80514
Wind angle: 0°	150C1F3	9588	21743	80517	9588	21743	-80517
	380C2F1	19175	43557	161025	19175	43557	-161025
	380C2F2	19175	43525	161029	19175	43525	-161029
	380C2F3	19175	43486	161034	19175	43486	-161034
	RTG	0	0	0	5198	11602	-42948
NL3/3	GW / opgw	4371	8769	31323	4371	8769	-31323
Wind, -5°C	150C1F1	11145	23525	85655	11145	23525	-85655
Permanent loads yg= 1.2	150C1F2	11145	23479	85654	11145	23479	-85654
Wind angle: 0°	150C1F3	11145	23421	85653	11145	23421	-85653
	380C2F1	22290	47050	171311	22290	47050	-171311
	380C2F2	22290	46958	171308	22290	46958	-171308
	380C2F3	22290	46842	171307	22290	46842	-171307
	RTG	0	0	0	8742	17230	-62511
NL3/4	GW / opgw	3206	6409	23646	3206	6409	-23646
Construction/maintenance, +5°C	150C1F1	10796	21807	80617	10796	21807	-80617
Permanent loads yg= 1.2	150C1F2	10796	21791	80620	10796	21791	-80620
Wind angle: 0°	150C1F3	10796	21771	80623	10796	21771	-80623
	380C2F1	21593	43613	161235	21593	43613	-161235
	380C2F2	21593	43582	161239	21593	43582	-161239
	380C2F3	21593	43542	161246	21593	43542	-161246
	RTG	0	0	0	6404	12748	-47227
NL3/1a	GW / opgw	2604	6303	20211	2605	9462	-25373
Wind, 10°C	150C1F1	9593	22078	73098	9595	30173	-84712
Permanent loads yg= 1.2	150C1F2	9593	21818	72869	9595	29084	-82861
Wind angle: 45°	150C1F3	9593	21498	72609	9594	27741	-80659
	380C2F1	19187	44156	146196	19190	60346	-169423
	380C2F2	19186	43637	145737	19190	58168	-165723
	380C2F3	19186	42996	145217	19189	55482	-161318
	RTG	0	0	0	5201	15268	-44237
NL3/1b	GW / opgw	2603	6081	21676	2603	6777	-22237
Wind, -20°C	150C1F1	9588	22349	80547	9588	24175	-81645
Permanent loads yg= 1.2	150C1F2	9588	22284	80533	9588	23938	-81440
Wind angle: 45°	150C1F3	9588	22203	80520	9588	23644	-81208
	380C2F1	19175	44697	161094	19176	48350	-163290
	380C2F2	19175	44568	161067	19176	47875	-162880
	380C2F3	19175	44407	161040	19176	47288	-162415
	RTG	0	0	0	5198	12669	-43363
NL3/3	GW / opgw	4371	10016	32147	4373	14660	-39007
Wind, -5°C	150C1F1	11145	25279	86353	11146	31579	-93885
Permanent loads yg= 1.2	150C1F2	11145	25073	86218	11146	30731	-92625
Wind angle: 45°	150C1F3	11145	24817	86067	11146	29689	-91151
	380C2F1	22290	50557	172706	22293	63157	-187769
	380C2F2	22290	50145	172436	22293	61462	-185250
	380C2F3	22290	49633	172134	22292	59378	-182301
	RTG	0	0	0	8744	23926	-69220
NL3/4	GW / opgw	3206	6612	23658	3206	7262	-24043
Construction/maintenance, +5°C	150C1F1	10797	22369	80622	10797	24129	-81469
Permanent loads yg= 1.2	150C1F2	10797	22306	80613	10797	23903	-81305
Wind angle: 45°	150C1F3	10797	22227	80605	10797	23622	-81122
	380C2F1	21593	44738	161243	21593	48258	-162938
	380C2F2	21593	44612	161226	21593	47805	-162611
	380C2F3	21593	44453	161210	21593	47244	-162244
	RTG	0	0	0	6404	13771	-47474
NL3/1a	GW / opgw	2605	10793	27912	2605	10793	-27912
Wind, 10°C	150C1F1	9596	33659	90909	9596	33659	-90909
Permanent loads yg= 1.2	150C1F2	9596	32226	88319	9596	32226	-88319
Wind angle: 90°	150C1F3	9595	30451	85191	9595	30451	-85191
	380C2F1	19192	67317	181817	19192	67317	-181817
	380C2F2	19191	64452	176637	19191	64452	-176637
	380C2F3	19190	60902	170383	19190	60902	-170383
	RTG	0	0	0	5201	16808	-46877

NL3/1b	GW / opgw	2603	7075	22601	2603	7075	-22601
Wind, -20°C	150C1F1	9588	24937	82396	9588	24937	-82396
Permanent loads yg= 1.2	150C1F2	9588	24623	82071	9588	24623	-82071
Wind angle: 90°	150C1F3	9588	24236	81700	9588	24236	-81700
	380C2F1	19176	49874	164792	19176	49874	-164792
	380C2F2	19176	49246	164141	19176	49246	-164141
	380C2F3	19176	48471	163400	19176	48471	-163400
	RTG	0	0	0	5198	13003	-43653
NL3/3	GW / opgw	4373	16605	42427	4373	16605	-42427
Wind, -5°C	150C1F1	11147	34309	98225	11147	34309	-98225
Permanent loads yg= 1.2	150C1F2	11147	33183	96390	11147	33183	-96390
Wind angle: 90°	150C1F3	11147	31795	94214	11147	31795	-94214
	380C2F1	22295	68618	196450	22295	68618	-196450
	380C2F2	22294	66366	192779	22294	66366	-192779
	380C2F3	22293	63590	188429	22293	63590	-188429
	RTG	0	0	0	8745	26174	-72712
NL3/4	GW / opgw	3206	7532	24307	3206	7532	-24307
Construction/maintenance, +5°C	150C1F1	10797	24852	82073	10797	24852	-82073
Permanent loads yg= 1.2	150C1F2	10797	24555	81810	10797	24555	-81810
Wind angle: 90°	150C1F3	10797	24187	81513	10797	24187	-81513
	380C2F1	21594	49704	164145	21594	49704	-164145
	380C2F2	21594	49109	163620	21594	49109	-163620
	380C2F3	21593	48373	163025	21593	48373	-163025
	RTG	0	0	0	6404	14081	-47676
NL3/1a	GW / opgw	2605	9462	25373	2604	6303	-20211
Wind, 10°C	150C1F1	9595	30173	84712	9593	22078	-73098
Permanent loads yg= 1.2	150C1F2	9595	29084	82861	9593	21818	-72869
Wind angle: -45°	150C1F3	9594	27741	80659	9593	21498	-72609
	380C2F1	19190	60346	169423	19187	44156	-146196
	380C2F2	19190	58168	165723	19186	43637	-145737
	380C2F3	19189	55482	161318	19186	42996	-145217
	RTG	0	0	0	5200	11727	-39521
NL3/1b	GW / opgw	2603	6777	22237	2603	6081	-21676
Wind, -20°C	150C1F1	9588	24175	81645	9588	22349	-80547
Permanent loads yg= 1.2	150C1F2	9588	23938	81440	9588	22284	-80533
Wind angle: -45°	150C1F3	9588	23644	81208	9588	22203	-80520
	380C2F1	19176	48350	163290	19175	44697	-161094
	380C2F2	19176	47875	162880	19175	44568	-161067
	380C2F3	19176	47288	162415	19175	44407	-161040
	RTG	0	0	0	5198	11859	-42953
NL3/3	GW / opgw	4373	14660	39007	4371	10016	-32147
Wind, -5°C	150C1F1	11146	31579	93885	11145	25279	-86353
Permanent loads yg= 1.2	150C1F2	11146	30731	92625	11145	25073	-86218
Wind angle: -45°	150C1F3	11146	29689	91151	11145	24817	-86067
	380C2F1	22293	63157	187769	22290	50557	-172706
	380C2F2	22293	61462	185250	22290	50145	-172436
	380C2F3	22292	59378	182301	22290	49633	-172134
	RTG	0	0	0	8742	18696	-63083
NL3/4	GW / opgw	3206	7262	24043	3206	6612	-23658
Construction/maintenance, +5°C	150C1F1	10797	24129	81469	10797	22369	-80622
Permanent loads yg= 1.2	150C1F2	10797	23903	81305	10797	22306	-80613
Wind angle: -45°	150C1F3	10797	23622	81122	10797	22227	-80605
	380C2F1	21593	48258	162938	21593	44738	-161243
	380C2F2	21593	47805	162611	21593	44612	-161226
	380C2F3	21593	47244	162244	21593	44453	-161210
	RTG	0	0	0	6404	13001	-47213
NL3/1a	GW / opgw	1953	4335	15291	1953	4335	-15291
Wind, 10°C	150C1F1	7193	15760	56325	7193	15760	-56325
Permanent loads yg= 0.9	150C1F2	7193	15702	56309	7193	15702	-56309
Wind angle: 0°	150C1F3	7193	15631	56292	7193	15631	-56292
	380C2F1	14386	31519	112651	14386	31519	-112651
	380C2F2	14386	31405	112618	14386	31405	-112618
	380C2F3	14386	31261	112584	14386	31261	-112584
	RTG	0	0	0	3899	8469	-30469
NL3/1b	GW / opgw	1952	4654	17096	1952	4654	-17096
Wind, -20°C	150C1F1	7189	17366	64043	7189	17366	-64043
Permanent loads yg= 0.9	150C1F2	7189	17350	64044	7189	17350	-64044
Wind angle: 0°	150C1F3	7189	17329	64046	7189	17329	-64046
	380C2F1	14378	34731	128087	14378	34731	-128087
	380C2F2	14378	34699	128089	14378	34699	-128089
	380C2F3	14378	34659	128092	14378	34659	-128092
	RTG	0	0	0	3898	9170	-33875

NL3/3	GW / opgw	3719	7753	27532	3719	7753	-27532
Wind, -5°C	150C1F1	8745	19427	70362	8745	19427	-70362
Permanent loads yg= 0.9	150C1F2	8745	19380	70356	8745	19380	-70356
Wind angle: 0°	150C1F3	8745	19320	70350	8745	19320	-70350
	380C2F1	17490	38854	140725	17490	38854	-140725
	380C2F2	17490	38759	140712	17490	38759	-140712
	380C2F3	17490	38641	140701	17490	38641	-140701
	RTG	0	0	0	7440	15192	-54906
NL3/4	GW / opgw	2554	5309	19540	2554	5309	-19540
Construction/maintenance, +5°C	150C1F1	8396	17734	65417	8396	17734	-65417
Permanent loads yg= 0.9	150C1F2	8396	17718	65418	8396	17718	-65418
Wind angle: 0°	150C1F3	8396	17698	65421	8396	17698	-65421
	380C2F1	16793	35467	130833	16793	35467	-130833
	380C2F2	16793	35436	130837	16793	35436	-130837
	380C2F3	16793	35396	130841	16793	35396	-130841
	RTG	0	0	0	5103	10547	-39011
NL3/1a	GW / opgw	1953	5242	16253	1953	8771	-22794
Wind, 10°C	150C1F1	7193	18110	58292	7195	27228	-73726
Permanent loads yg= 0.9	150C1F2	7193	17821	57953	7195	26012	-71402
Wind angle: 45°	150C1F3	7193	17467	57565	7195	24505	-68586
	380C2F1	14387	36220	116583	14390	54457	-147451
	380C2F2	14387	35643	115906	14390	52025	-142805
	380C2F3	14387	34933	115130	14389	49010	-137172
	RTG	0	0	0	3900	13493	-37618
NL3/1b	GW / opgw	1952	4872	17166	1952	5645	-18010
Wind, -20°C	150C1F1	7189	17956	64156	7189	19952	-65886
Permanent loads yg= 0.9	150C1F2	7189	17889	64130	7189	19687	-65577
Wind angle: 45°	150C1F3	7189	17804	64101	7189	19360	-65223
	380C2F1	14378	35913	128311	14378	39904	-131772
	380C2F2	14378	35777	128259	14378	39373	-131154
	380C2F3	14378	35608	128202	14378	38721	-130446
	RTG	0	0	0	3898	10312	-34566
NL3/3	GW / opgw	3719	9062	28588	3721	14009	-36576
Wind, -5°C	150C1F1	8745	21283	71442	8747	28254	-81482
Permanent loads yg= 0.9	150C1F2	8745	21060	71246	8746	27312	-79870
Wind angle: 45°	150C1F3	8745	20785	71024	8746	26153	-77956
	380C2F1	17490	42566	142884	17493	56508	-162964
	380C2F2	17490	42121	142492	17493	54624	-159739
	380C2F3	17490	41571	142048	17492	52305	-155912
	RTG	0	0	0	7442	22289	-63115
NL3/4	GW / opgw	2554	5517	19572	2554	6210	-20120
Construction/maintenance, +5°C	150C1F1	8396	18310	65474	8397	20188	-66761
Permanent loads yg= 0.9	150C1F2	8396	18245	65457	8397	19942	-66524
Wind angle: 45°	150C1F3	8396	18163	65439	8396	19638	-66256
	380C2F1	16793	36620	130948	16793	40375	-133522
	380C2F2	16793	36489	130914	16793	39883	-133049
	380C2F3	16793	36325	130878	16793	39276	-132512
	RTG	0	0	0	5103	11611	-39414
NL3/1a	GW / opgw	1954	10208	25731	1954	10208	-25731
Wind, 10°C	150C1F1	7196	31077	81279	7196	31077	-81279
Permanent loads yg= 0.9	150C1F2	7196	29503	78160	7196	29503	-78160
Wind angle: 90°	150C1F3	7195	27538	74322	7195	27538	-74322
	380C2F1	14392	62154	162559	14392	62154	-162559
	380C2F2	14391	59006	156320	14391	59006	-156320
	380C2F3	14390	55075	148645	14390	55075	-148645
	RTG	0	0	0	3901	15214	-40930
NL3/1b	GW / opgw	1952	5983	18527	1952	5983	-18527
Wind, -20°C	150C1F1	7189	20810	66996	7189	20810	-66996
Permanent loads yg= 0.9	150C1F2	7189	20455	66519	7189	20455	-66519
Wind angle: 90°	150C1F3	7189	20020	65968	7189	20020	-65968
	380C2F1	14379	41620	133992	14379	41620	-133992
	380C2F2	14379	40910	133037	14379	40910	-133037
	380C2F3	14378	40039	131936	14378	40039	-131936
	RTG	0	0	0	3898	10684	-34999
NL3/3	GW / opgw	3721	16048	40351	3721	16048	-40351
Wind, -5°C	150C1F1	8747	31276	86909	8747	31276	-86909
Permanent loads yg= 0.9	150C1F2	8747	30032	84636	8747	30032	-84636
Wind angle: 90°	150C1F3	8747	28495	81901	8747	28495	-81901
	380C2F1	17495	62552	173818	17495	62552	-173818
	380C2F2	17494	60065	169273	17494	60065	-169273
	380C2F3	17493	56989	163802	17493	56989	-163802
	RTG	0	0	0	7443	24686	-67163

NL3/4	GW / opgw	2554	6506	20476	2554	6506	-20476
Construction/maintenance, +5°C	150C1F1	8397	20979	67619	8397	20979	-67619
Permanent loads yg= 0.9	150C1F2	8397	20652	67249	8397	20652	-67249
Wind angle: 90°	150C1F3	8397	20250	66824	8397	20250	-66824
	380C2F1	16793	41957	135239	16793	41957	-135239
	380C2F2	16793	41304	134497	16793	41304	-134497
	380C2F3	16793	40501	133648	16793	40501	-133648
	RTG	0	0	0	5103	11944	-39698
NL3/1a	GW / opgw	1953	8771	22794	1953	5242	-16253
Wind, 10°C	150C1F1	7195	27228	73726	7193	18110	-58292
Permanent loads yg= 0.9	150C1F2	7195	26012	71402	7193	17821	-57953
Wind angle: -45°	150C1F3	7195	24505	68586	7193	17467	-57565
	380C2F1	14390	54457	147451	14387	36220	-116583
	380C2F2	14390	52025	142805	14387	35643	-115906
	380C2F3	14389	49010	137172	14387	34933	-115130
	RTG	0	0	0	3900	9503	-31218
NL3/1b	GW / opgw	1952	5645	18010	1952	4872	-17166
Wind, -20°C	150C1F1	7189	19952	65886	7189	17956	-64156
Permanent loads yg= 0.9	150C1F2	7189	19687	65577	7189	17889	-64130
Wind angle: -45°	150C1F3	7189	19360	65223	7189	17804	-64101
	380C2F1	14378	39904	131772	14378	35913	-128311
	380C2F2	14378	39373	131154	14378	35777	-128259
	380C2F3	14378	38721	130446	14378	35608	-128202
	RTG	0	0	0	3898	9436	-33909
NL3/3	GW / opgw	3721	14009	36576	3719	9062	-28588
Wind, -5°C	150C1F1	8747	28254	81482	8745	21283	-71442
Permanent loads yg= 0.9	150C1F2	8746	27312	79870	8745	21060	-71246
Wind angle: -45°	150C1F3	8746	26153	77956	8745	20785	-71024
	380C2F1	17493	56508	162964	17490	42566	-142884
	380C2F2	17493	54624	159739	17490	42121	-142492
	380C2F3	17492	52305	155912	17490	41571	-142048
	RTG	0	0	0	7441	16711	-55679
NL3/4	GW / opgw	2554	6210	20120	2554	5517	-19572
Construction/maintenance, +5°C	150C1F1	8397	20188	66761	8396	18310	-65474
Permanent loads yg= 0.9	150C1F2	8397	19942	66524	8396	18245	-65457
Wind angle: -45°	150C1F3	8396	19638	66256	8396	18163	-65439
	380C2F1	16793	40375	133522	16793	36620	-130948
	380C2F2	16793	39883	133049	16793	36489	-130914
	380C2F3	16793	39276	132512	16793	36325	-130878
	RTG	0	0	0	5103	10804	-39014

ZWW4HK450

Loadcases for tower strength (serviceability limit state)

		Ahead			Back		
Loadcase according to 50341-3-15	Att. Point	Vertical [N]	Transversal [N]	Longitudinal [N]	Vertical [N]	Transversal [N]	Longitudinal [N]
NL4/1a	GW / opgw	2170	4801	16779	2170	4801	-16779
Wind, 10°C	150C1F1	7993	17380	61670	7993	17380	-61670
Permanent loads yg= 1.0	150C1F2	7993	17305	61644	7993	17305	-61644
Wind angle: 0°	150C1F3	7993	17212	61617	7993	17212	-61617
	380C2F1	15986	34760	123340	15986	34760	-123340
	380C2F2	15986	34611	123289	15986	34611	-123289
	380C2F3	15986	34424	123234	15986	34424	-123234
	RTG	0	0	0	4333	9343	-33408
NL4/1b	GW / opgw	2169	5058	18651	2169	5058	-18651
Wind, -20°C	150C1F1	7988	18844	69688	7988	18844	-69688
Permanent loads yg= 1.0	150C1F2	7988	18831	69689	7988	18831	-69689
Wind angle: 0°	150C1F3	7988	18814	69691	7988	18814	-69691
	380C2F1	15977	37688	139375	15977	37688	-139375
	380C2F2	15977	37661	139378	15977	37661	-139378
	380C2F3	15977	37628	139383	15977	37628	-139383
	RTG	0	0	0	4331	9986	-36977
NL4/3	GW / opgw	7433	13013	47395	7433	13013	-47395
Wind, -5°C	150C1F1	12617	25824	94592	12617	25824	-94592
Permanent loads yg= 1.0	150C1F2	12617	25786	94594	12617	25786	-94594
Wind angle: 0°	150C1F3	12617	25739	94597	12617	25739	-94597
	380C2F1	25235	51648	189184	25235	51648	-189184
	380C2F2	25235	51573	189188	25235	51573	-189188
	380C2F3	25235	51478	189194	25235	51478	-189194
	RTG	0	0	0	14883	25819	-94863
NL4/4	GW / opgw	2671	5499	20294	2671	5499	-20294
Construction/maintenance, +5°C	150C1F1	8996	18742	69308	8996	18742	-69308
Permanent loads yg= 1.0	150C1F2	8996	18729	69310	8996	18729	-69310
Wind angle: 0°	150C1F3	8996	18713	69313	8996	18713	-69313
	380C2F1	17991	37484	138616	17991	37484	-138616
	380C2F2	17991	37458	138620	17991	37458	-138620
	380C2F3	17991	37425	138625	17991	37425	-138625
	RTG	0	0	0	5336	10935	-40518
NL4/1a	GW / opgw	2170	6006	18166	2171	10613	-26864
Wind, 10°C	150C1F1	7993	20488	64544	7996	32495	-85509
Permanent loads yg= 1.0	150C1F2	7993	20104	64057	7996	30916	-82455
Wind angle: 45°	150C1F3	7993	19632	63497	7995	28948	-78715
	380C2F1	15987	40976	129088	15992	64991	-171017
	380C2F2	15987	40208	128115	15991	61832	-164909
	380C2F3	15987	39265	126995	15990	57896	-157430
	RTG	0	0	0	4334	15994	-43356
NL4/1b	GW / opgw	2169	5233	18682	2169	5821	-19179
Wind, -20°C	150C1F1	7988	19321	69724	7989	20860	-70706
Permanent loads yg= 1.0	150C1F2	7988	19267	69712	7989	20660	-70523
Wind angle: 45°	150C1F3	7988	19199	69699	7989	20411	-70317
	380C2F1	15977	38642	139448	15977	41721	-141411
	380C2F2	15977	38534	139423	15977	41319	-141047
	380C2F3	15977	38398	139398	15977	40823	-140634
	RTG	0	0	0	4331	10882	-37349
NL4/3	GW / opgw	7433	13915	47568	7434	16939	-50120
Wind, -5°C	150C1F1	12618	27216	94915	12619	31971	-99342
Permanent loads yg= 1.0	150C1F2	12618	27056	94844	12618	31339	-98569
Wind angle: 45°	150C1F3	12617	26855	94767	12618	30560	-97676
	380C2F1	25235	54432	189829	25237	63942	-198685
	380C2F2	25235	54111	189688	25237	62677	-197137
	380C2F3	25235	53711	189533	25236	61121	-195351
	RTG	0	0	0	14885	30430	-96830
NL4/4	GW / opgw	2671	5669	20307	2671	6215	-20648
Construction/maintenance, +5°C	150C1F1	8996	19212	69318	8996	20692	-70072
Permanent loads yg= 1.0	150C1F2	8996	19159	69309	8996	20501	-69928
Wind angle: 45°	150C1F3	8996	19093	69302	8996	20264	-69765
	380C2F1	17991	38424	138635	17991	41384	-140145
	380C2F2	17991	38319	138619	17991	41002	-139856
	380C2F3	17991	38186	138603	17991	40529	-139531
	RTG	0	0	0	5336	11792	-40743
NL4/1a	GW / opgw	2171	12443	30579	2171	12443	-30579
Wind, 10°C	150C1F1	7997	37455	95284	7997	37455	-95284
Permanent loads yg= 1.0	150C1F2	7997	35433	91273	7997	35433	-91273
Wind angle: 90°	150C1F3	7996	32896	86289	7996	32896	-86289
	380C2F1	15995	74910	190569	15995	74910	-190569
	380C2F2	15994	70866	182546	15994	70866	-182546
	380C2F3	15992	65792	172578	15992	65792	-172578
	RTG	0	0	0	4335	18235	-47731

NL4/1b	GW / opgw	2169	6074	19499	2169	6074	-19499
Wind, -20°C	150C1F1	7989	21506	71371	7989	21506	-71371
Permanent loads yg= 1.0	150C1F2	7989	21240	71083	7989	21240	-71083
Wind angle: 90°	150C1F3	7989	20912	70754	7989	20912	-70754
	380C2F1	15977	43012	142743	15977	43012	-142743
	380C2F2	15977	42479	142166	15977	42479	-142166
	380C2F3	15977	41823	141508	15977	41823	-141508
	RTG	0	0	0	4331	11164	-37605
NL4/3	GW / opgw	7435	18214	51684	7435	18214	-51684
Wind, -5°C	150C1F1	12619	34010	102078	12619	34010	-102078
Permanent loads yg= 1.0	150C1F2	12619	33168	100909	12619	33168	-100909
Wind angle: 90°	150C1F3	12619	32133	99547	12619	32133	-99547
	380C2F1	25238	68021	204156	25238	68021	-204156
	380C2F2	25238	66337	201818	25238	66337	-201818
	380C2F3	25237	64265	199093	25237	64265	-199093
	RTG	0	0	0	14885	31876	-98142
NL4/4	GW / opgw	2671	6444	20880	2671	6444	-20880
Construction/maintenance, +5°C	150C1F1	8996	21302	70605	8996	21302	-70605
Permanent loads yg= 1.0	150C1F2	8996	21051	70374	8996	21051	-70374
Wind angle: 90°	150C1F3	8996	20740	70111	8996	20740	-70111
	380C2F1	17992	42604	141210	17992	42604	-141210
	380C2F2	17992	42102	140747	17992	42102	-140747
	380C2F3	17991	41481	140222	17991	41481	-140222
	RTG	0	0	0	5336	12054	-40921
NL4/1a	GW / opgw	2171	10613	26864	2170	6006	-18166
Wind, 10°C	150C1F1	7996	32495	85509	7993	20488	-64544
Permanent loads yg= 1.0	150C1F2	7996	30916	82455	7993	20104	-64057
Wind angle: -45°	150C1F3	7995	28948	78715	7993	19632	-63497
	380C2F1	15992	64991	171017	15987	40976	-129088
	380C2F2	15991	61832	164909	15987	40208	-128115
	380C2F3	15990	57896	157430	15987	39265	-126995
	RTG	0	0	0	4333	10707	-34516
NL4/1b	GW / opgw	2169	5821	19179	2169	5233	-18682
Wind, -20°C	150C1F1	7989	20860	70706	7988	19321	-69724
Permanent loads yg= 1.0	150C1F2	7989	20660	70523	7988	19267	-69712
Wind angle: -45°	150C1F3	7989	20411	70317	7988	19199	-69699
	380C2F1	15977	41721	141411	15977	38642	-139448
	380C2F2	15977	41319	141047	15977	38534	-139423
	380C2F3	15977	40823	140634	15977	38398	-139398
	RTG	0	0	0	4331	10201	-36984
NL4/3	GW / opgw	7434	16939	50120	7433	13915	-47568
Wind, -5°C	150C1F1	12619	31971	99342	12618	27216	-94915
Permanent loads yg= 1.0	150C1F2	12618	31339	98569	12618	27056	-94844
Wind angle: -45°	150C1F3	12618	30560	97676	12617	26855	-94767
	380C2F1	25237	63942	198685	25235	54432	-189829
	380C2F2	25237	62677	197137	25235	54111	-189688
	380C2F3	25236	61121	195351	25235	53711	-189533
	RTG	0	0	0	14884	26925	-94908
NL4/4	GW / opgw	2671	6215	20648	2671	5669	-20307
Construction/maintenance, +5°C	150C1F1	8996	20692	70072	8996	19212	-69318
Permanent loads yg= 1.0	150C1F2	8996	20501	69928	8996	19159	-69309
Wind angle: -45°	150C1F3	8996	20264	69765	8996	19093	-69302
	380C2F1	17991	41384	140145	17991	38424	-138635
	380C2F2	17991	41002	139856	17991	38319	-138619
	380C2F3	17991	40529	139531	17991	38186	-138603
	RTG	0	0	0	5336	11146	-40509

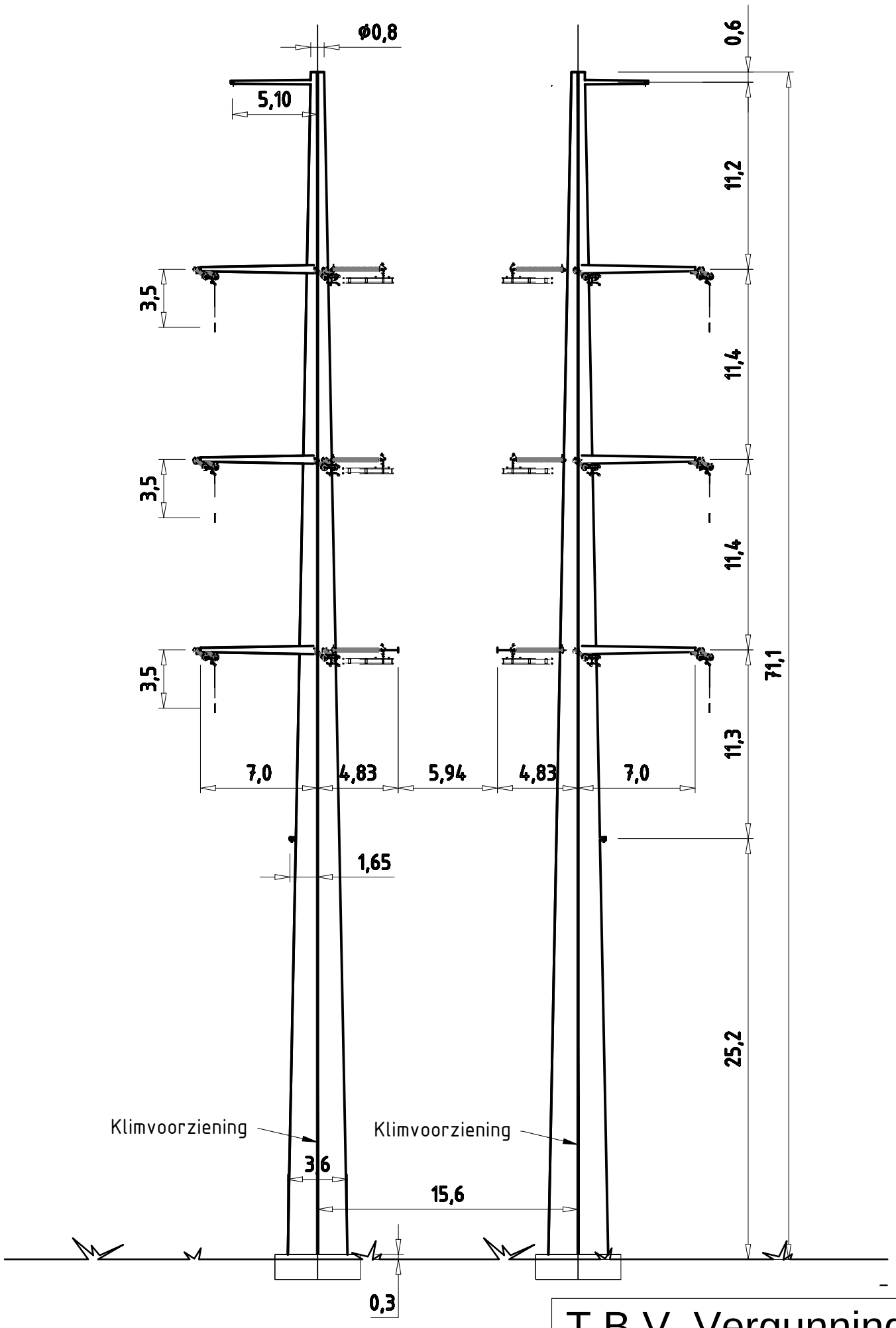

- Maatvoering indicatief

T.B.V. Vergunnings aanvraag

Wintrack
Masttype: ZWW4HK450

- Trekparameter 1800m
- 2x380 / 2x150 Hoekmast
- 450m Veldlengte
- 150°-180° Lijnhoek
- Uitvoering Staal of Beton
- Kleurstelling hoofdelement:
  Ral 9018 Papyrus white
- Kleurstelling Appendages:
  Ral 7021 Black grey

5.0	03-03-2014	Modified botom diameter and increased traverse length
4.0	03-02-2014	Modified top/botom diameter
3.0	13-06-2013	Small modification

KEMA DNV

Projectname: Engineering verbinding ZW380

Third angle projection:

Drawing no.: 74102194-035-111V

Design state: Definitief		Scale: 1:300	
Drawn by: BJT	03-03-2014	Units: m	
Checked by: AJP	03-03-2014	Project no: 000.145	
Approved by: AW	03-03-2014	Company: TenneT	

Description: Wintrack Masttype ZWW4HK450

Revision: 5.0

Format: A3

DNV KEMA Energy & Sustainability, Utrechtseweg 310, 6812 AR Arnhem, tel: +31 26 3 56 91 11, www.dnvkema.com

© 2012 - Filename: 74102194-035-111 - ZWW4HK450 Rev5.0.dwg

ZWW4HL450

Fundatie berekening

Bijlage CCN

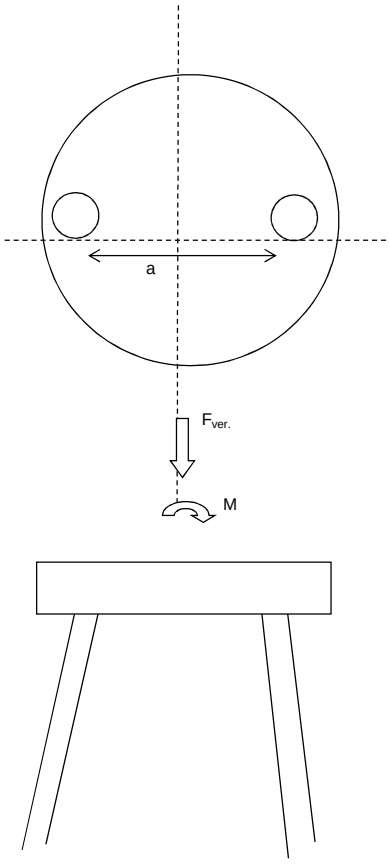

Fundatie ontwerp:
Heipaal

Afmetingen	b	400	mm
	d	400	mm
omtrek paal	$O_{p;gem}$	1.6	m
schoorstand		8	:1
α		7.125	graden
Opstort	Diameter	5.6	m
	Hoogte	1.8	m
	Inhoud	44.3	m^3
	e.g.	1064	kN
Onderplaat	Diameter	13.0	m
	Hoogte	1.3	m
	Inhoud	173	m^3
	e.g.	4141	kN
Hart paal tov rand fund.		0.6	m

Optreden krachten

e.g. mast	1057	kN
Fgeleiders	340	kN
Maximale dwarskracht	1385	kN
Fmax vert (druk)	1609	kN
Fmin vert (trek)	1206	kN
Maximale moment	69716	kNm

Moment

F_{diag}	6321	kN
F_{hor}	1385	kN
F_{ver}	6272	kN
Mhor (tgv Fhor)	4293	kNm
M_{tot}	74009	kNm
F=M/a	6272	kN

Verticaal reactiekracht

Fwater (trek)	2169	kN
Fgrond (druk)	2919	kN
Fgrond (trek)	2432	kN
Fdmax (druk)	5679	kN
Ftmax (trek)	2739	kN
Fdtot (druk)	11951	kN
Fttot (trek)	3533	kN
Palen druk	11	(-)
Palen trek	11	(-)
Totaal palen	22	(-)

Per fundering

ZWW4HL450

TREKPALEN volgens CUR 2001-4 par. 8.

$$F_{r;trek;d} = \int_0^L O_{p;gem} \times p_{r;z;d} \times dz$$

Bijlage CCN

Bepaling opneembare paalbelasting op druk

heipaal			
Afmeting paal	b	0.40	m
	b	0.40	m
omtrek paal	$O_{p;gem}$	1.60	m
paalfactor	α t	0.007	
aantal palen	M	1	
aantal sonderingen	N	1	
factor invloed aantal sonderingen	ξ	0.75	
conusweerstand over wrijvingstraject	$q_{c;z;max}$	15	MPa
	$q_{c;z;rep}$	11.25	MPa
materiaalfactor	$\gamma_{m;b4}$	1.4	
factor, wisselende belastingen	$\gamma_{m;var;qc}$	1.5	
	$q_{c;z;d}$	5.36	MPa
	$p_{r;z;d}$	37.5	kN/m²
	$F_{r;trek;d;i}$	60.0	kN/m⊥
	$F_{trek,d}$	596	kN/m

Bepaling opneembare trekbelasting paal

sondering	diepte		$q_{c;z}$		$P_{r;max;schacht;i}$	$F_{r;trek;d;i}$	$F_{trek,d}$
	m	m	MPa	α t	kPa	kN	kN
	0	-1	0	0.007	0.00	0.00	0
	-1	-2	0	0.007	0.00	0.00	0
	-2	-3	0	0.007	0.00	0.00	0
	-3	-4	0	0.007	0.00	0.00	0
	-4	-5	0	0.007	0.00	0.00	0
	-5	-6	0	0.007	0.00	0.00	0
	-6	-7	0	0.007	0.00	0.00	0
	-7	-8	0	0.007	0.00	0.00	0
	-8	-9	1	0.007	2.50	4.00	4
	-9	-10	3	0.007	7.50	12.00	16
	-10	-11	2	0.007	5.00	8.00	24
	-11	-12	0	0.007	0.00	0.00	24
	-12	-13	3	0.007	7.50	12.00	36
	-13	-14	2	0.007	5.00	8.00	44
	-14	-15	4	0.007	10.00	16.00	60
	-15	-16	10	0.007	25.00	40.00	100
	-16	-17	9	0.007	22.50	36.00	136
	-17	-18	8	0.007	20.00	32.00	168
	-18	-19	12	0.007	30.00	48.00	216
	-19	-20	12	0.007	30.00	48.00	264
	-20	-21	10	0.007	25.00	40.00	304
	-21	-22	11	0.007	27.50	44.00	348
	-22	-23	11	0.007	27.50	44.00	392
	-23	-24	12	0.007	30.00	48.00	440
	-24	-25	12	0.007	30.00	48.00	488
	-25	-26	12	0.007	30.00	48.00	536
	-26	-27	15	0.007	37.50	60.00	596

$F_{trek,d}$	596	kN	paalafmeting	400	mm, paalpuntnivo	-27.00	m

Paalgroep factor	10%	
$F_{trek,d}$	**536.4**	kN

ZWW4HL450

DRUKPALEN

FUNDERINGSCONSTRUCTIE
Toelaatbare paalbelastingen

Bijlage CCN

Bepaling opneembare paalbelasting op druk

heipaal			v		
		diameter	a	2	mm
				2	mm
		Deq		0.001808	

maximale puntweerstand

$P_{r;max;punt;i}$		11.25	MN/m²
paalklasse factor	α_p	1.00	
factor paalvoet	β	1	
hoek van inwendige vrijwing van paalvoet	ϕ	40	
factor dwarsdoorsnede paalvoet	s	1.00	
minimale waarde neergaande deel	$q_{c;II;gem}$	9.00	MN/m²
gem. sondeerwaarde neergaande deel	$q_{c;I;gem}$	14.00	MN/m²
gem. sondeerwaarde opgaande deel	$q_{c;III;gem}$	11.00	MN/m²

maximale paalschachtwrijving

$P_{r;max;schacht;i}$		0.05	MN/m²
waarin:			
paalfactor	α_s	0.010	
conusweerstand over wrijvingstraject	$q_{c;z;a}$	5.00	MN/m²

maximale draagkracht alleenstaande paal

$\mathbf{F_{r;max;i}}$		0.00	MN
waarin:			
$\mathbf{F_{r;max;punt;i}}$		0.00	MN
paalpunt oppervlak	A_{punt}	0.00	m²
$\mathbf{F_{r;max;schacht;i}}$		0.00	MN
gemiddelde paalomtrek	$O_{p;gem}$	0.01	m
lengte schachtwrijving	Δl	15.00	m

Bepaling rekenwaarde van de maximale draagkracht

$F_{r;paal;max;d}$	MN	0.00	MN
materiaalfactor grond	$\gamma_{m;b}$	1.20	
waarde afhankelijk van aantal palen en aantal sonderingen	$\xi_{1;N}$	0.75	

$F_{r;paal;max;d}$	3	kN	mm, paalpuntnivo	-27.00 m

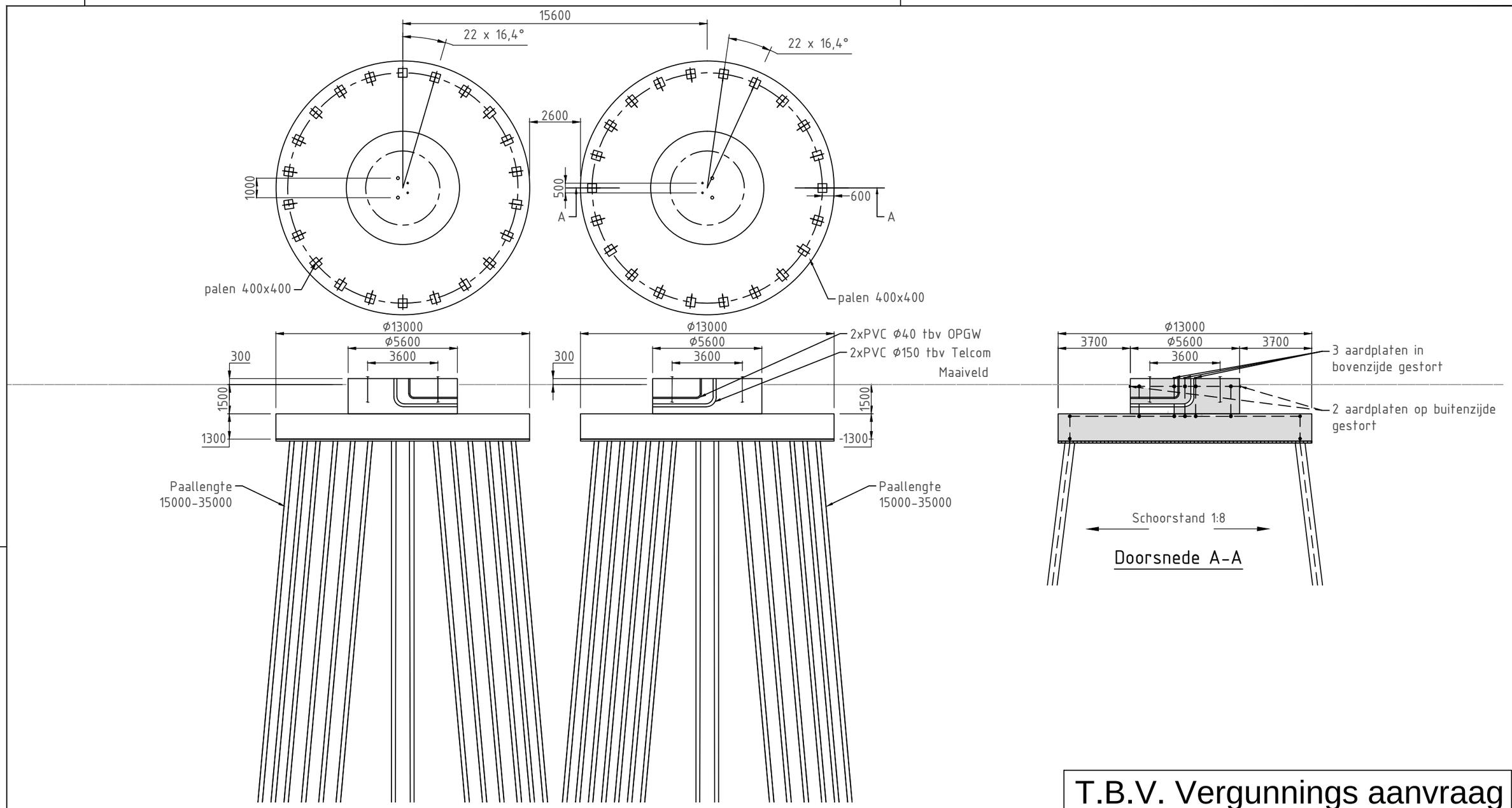

T.B.V. Vergunnings aanvraag

2.0	17-13-2015	Aantal palen gewijzigd
1.0	10-03-2014	Eerste uitgave

Verklaring

- Gewapend beton
- Werkvloer

Verklaring aarding

- Ringleiding Ø16mm (FeB220) glad
- Koppeling met aardstaaf in paal
- Aardplaten

Opmerkingen

Maten in mm
Coordinaten in mm, in het stelsel van de rijksdriehoekmeting
Maatvoering in het 360 graden stelsel
Vellingkanten niet getekend
Ringleiding in bovenkant poer op het bovennet
plaatsen in de eerste laag
Mastvoetanker afmeting exclusief mastvoetflens breedte
Afmetingen indicatief

Projectname:
Engineering verbinding ZW380

Third angle projection:

Drawing no.:
74102194-032-112V

Design state: Definitief		Scale:	1:200
Drawn by: SGR	17-03-2015	Units:	mm
Checked by: AJP	17-03-2015	Project no:	000.145
Approved by: AW	17-03-2015	Company:	TenneT

Description:
Principe ontwerp fundatie hoekmast
ZWW4HL450 masten familie

Revision: 2.0

Format: A3

DNV KEMA Energy & Sustainability, Utrechtseweg 310, 6812 AR Arnhem, tel: +31 26 3 56 91 11, www.dnvkema.com

© 2015 - Filename: 74102194-032-112 - ZWW4HL450 Principe ontwerp fundaties_rev2.0.dwg

ZWW4HL450

Bijlage BCN

Location dependent data to obtain pressures

Wind area			2	
Terrain catagory	O=onbebouwd, B=bebouwd		O	
Hoogte		h	71.1	m
Diameter voet		d voet	3.6	m
top		d top	0.8	m
gem		d gem	2.2	m
wanddikte		t	28	mm
Oppervlakte aan voet		A	314210	mm^2
Traagheidsmoment aan voet		W_x	2.78E+08	mm^3
Weerstandsmoment aan voet		I_x	4.95E+11	mm^4
		2de orde	10.0	%
Mast: Gewicht		$F_{rep;ver}$	1057	kN

Ultimate limit state	**hoogte**	**F_{ver}**	**$F_{loodrecht}$**	**$F_{//}$**	$F_{Samengesteld}$		
	m	kN	kN	kN	kN		
GW / opgw	70.5	21.0	69.3	0.0	69.3	3135	kNm
380C1F1	59.3	33.1	127.7	0.0	127.7	6085	kNm
380C1F2	47.9	33.1	125.0	0.0	125.0	4823	kNm
380C1F3	36.5	33.1	121.8	0.0	121.8	3592	kNm
380C2F1	59.3	66.1	255.3	0.0	255.3	12170	kNm
380C2F2	47.9	66.1	250.1	0.0	250.1	9646	kNm
380C2F3	36.5	66.1	243.7	0.0	243.7	7183	kNm
RTG	25.2	21.0	62.7	-117.6	133.3	1918	kNm

Stuwdruk	$F_{hor.}$	46.6	kN
	$M_{d;wind}$	1476	kNm
Totaal	$M_{d;tot}$	63378	kNm
Totaal moment incl. 2^{ue} orde effect	$M_{d;tot}$	69716	kNm

Normaalkracht;

Optredende normaalkracht

$N_{d;geleiders}$		340	kN
$N_{d;\ e.g.\ mast}$		1269	kN
$N_{s;d;totaal}$		1609	kN

Is buis plooigevoelig tgv normaalkracht: conform NEN-EN 50341 par. 7.4.5.4 — JA

ρ_a	0.62	
A_{eff}	196182	mm^2

Optredende spanning tgv normaalkracht

$N_{sd}/A_{eff} = f_{yd}/y_{m1}$ — 8 N/mm^2

Moment;

Optredende moment in de voet:

$M_{d;tot}$ — 69716 kNm

Is buis plooigevoelig tgv momentkracht: conform NEN-EN 50341 par. 7.4.5.4 — JA

ρ_a	0.92	
W_{eff}	2.57E+08	mm^3

Optredende spaning tgv moment:

$M_d/W_{eff} = f_{yd}/y_{m1}$ — 271 N/mm^2

Totale spanning: σ_d 279 N/mm^2 < 284 N/mm^2 = ACCOORD

$\sigma_{d;toegestaan}$ 284 N/mm^2 ==> 80% van 355 N/mm^2

Special limit state	**hoogte**	**F_{ver}**	**$F_{loodrecht}$**	**$F_{//}$**	$F_{Samengesteld}$		
	m	kN	kN	kN	kN		
GW / opgw	70.5	14.9	51.9	0.0	51.9	3661	kNm
380C1F1	59.3	25.2	99.4	0.0	99.4	5892	kNm
380C1F2	47.9	25.2	97.6	0.0	97.6	4677	kNm
380C1F3	36.5	25.2	95.5	0.0	95.5	3487	kNm
380C2F1	59.3	50.5	198.7	0.0	198.7	11784	kNm
380C2F2	47.9	50.5	195.3	0.0	195.3	9353	kNm
380C2F3	36.5	50.5	191.1	0.0	191.1	6974	kNm
RTG	25.2	14.9	47.4	-90.4	102.1	2573	kNm

Stuwdruk	$F_{hor.}$	375	kN		
Verplaating		1.39	m	3.88	EIS TENNET VISUEE
Percentage van de verplaatsing		1.95%		5.5%	NEN-EN-50341
Hoek		2.11	graden		
Kromming		0.45%		1%	NEN-EN-50341
Fundatie rotatiestijfheid		0.005	rad		

ZWW4HL450

Loadcases for tower strength (ultimate limit state)

		Ahead			Back		
Loadcase according to 50341-3-15	Att. Point	Vertical [N]	Transversal [N]	Longitudinal [N]	Vertical [N]	Transversal [N]	Longitudinal [N]
NL1/1a	GW / opgw	2604	10329	19363	2604	10329	-19363
Wind, 10°C	380C1F1	9594	35948	69269	9594	35948	-69269
Permanent loads yg= 1.2	380C1F2	9593	35487	68900	9593	35487	-68900
Wind angle: 0°	380C1F3	9593	34925	68483	9593	34925	-68483
	380C2F1	19187	71897	138538	19187	71897	-138538
	380C2F2	19187	70974	137800	19187	70974	-137800
	380C2F3	19187	69850	136967	19187	69850	-136967
	RTG	0	0	0	5201	19063	-37308
NL1/1b	GW / opgw	2603	9719	20286	2603	9719	-20286
Wind, -20°C	380C1F1	9588	35907	75440	9588	35907	-75440
Permanent loads yg= 1.2	380C1F2	9588	35850	75441	9588	35850	-75441
Wind angle: 0°	380C1F3	9588	35778	75444	9588	35778	-75444
	380C2F1	19175	71815	150880	19175	71815	-150880
	380C2F2	19175	71700	150882	19175	71700	-150882
	380C2F3	19175	71556	150889	19175	71556	-150889
	RTG	0	0	0	5198	19098	-40242
NL1/3	GW / opgw	10505	28204	57617	10505	28204	-57617
Wind, -5°C	380C1F1	16533	53167	109647	16533	53167	-109647
Permanent loads yg= 1.2	380C1F2	16533	52997	109628	16533	52997	-109628
Wind angle: 0°	380C1F3	16533	52785	109613	16533	52785	-109613
	380C2F1	33067	106335	219294	33067	106335	-219294
	380C2F2	33067	105994	219256	33067	105994	-219256
	380C2F3	33067	105569	219227	33067	105569	-219227
	RTG	0	0	0	21038	55532	-115424
NL1/4	GW / opgw	3356	10989	23008	3356	10989	-23008
Construction/maintenance, +5°C	380C1F1	11098	36748	77241	11098	36748	-77241
Permanent loads yg= 1.2	380C1F2	11098	36692	77246	11098	36692	-77246
Wind angle: 0°	380C1F3	11098	36623	77255	11098	36623	-77255
	380C2F1	22195	73496	154483	22195	73496	-154483
	380C2F2	22195	73385	154493	22195	73385	-154493
	380C2F3	22195	73245	154510	22195	73245	-154510
	RTG	0	0	0	6705	21768	-45968
NL1/6	GW / opgw	2930	9456	20279	2930	9456	-20279
Permanent, +10°C	380C1F1	10793	34688	74388	10793	34688	-74388
Permanent loads yg= 1.35	380C1F2	10793	34688	74388	10793	34688	-74388
	380C1F3	10793	34688	74388	10793	34688	-74388
	380C2F1	21587	69376	148776	21587	69376	-148776
	380C2F2	21587	69376	148776	21587	69376	-148776
	380C2F3	21587	69376	148776	21587	69376	-148776
	RTG	0	0	0	5851	18894	-40519
NL1/1a	GW / opgw	2604	9568	18694	2607	23154	-35861
Wind, 10°C	380C1F1	9593	34065	67929	9601	69596	-110545
Permanent loads yg= 1.2	380C1F2	9593	33810	67788	9600	65859	-105608
Wind angle: 45°	380C1F3	9593	33497	67634	9599	61150	-99408
	380C2F1	19186	68130	135858	19201	139191	-221089
	380C2F2	19186	67619	135576	19199	131719	-211215
	380C2F3	19186	66994	135268	19197	122299	-198817
	RTG	0	0	0	5203	34036	-55316
NL1/1b	GW / opgw	2603	9628	20282	2603	11253	-21378
Wind, -20°C	380C1F1	9588	35663	75456	9588	39756	-77527
Permanent loads yg= 1.2	380C1F2	9588	35628	75461	9588	39292	-77144
Wind angle: 45°	380C1F3	9588	35583	75469	9588	38726	-76710
	380C2F1	19175	71327	150912	19176	79513	-155054
	380C2F2	19175	71256	150923	19176	78583	-154288
	380C2F3	19175	71167	150938	19176	77452	-153420
	RTG	0	0	0	5198	20767	-41004
NL1/3	GW / opgw	10505	27749	57630	10508	35391	-61721
Wind, -5°C	380C1F1	16533	52448	109613	16536	65106	-118008
Permanent loads yg= 1.2	380C1F2	16533	52345	109618	16536	63657	-116616
Wind angle: 45°	380C1F3	16533	52216	109630	16535	61889	-115001
	380C2F1	33067	104896	219225	33073	130213	-236016
	380C2F2	33067	104689	219236	33072	127314	-233232
	380C2F3	33067	104431	219259	33071	123777	-230001
	RTG	0	0	0	21041	63538	-118141

NL1/4	GW / opgw	3356	10903	23016	3357	12327	-23679
Construction/maintenance, +5°C	380C1F1	11098	36511	77274	11098	40311	-78712
Permanent loads yg= 1.2	380C1F2	11098	36476	77281	11098	39889	-78421
Wind angle: 45°	380C1F3	11098	36433	77291	11098	39374	-78096
	380C2F1	22195	73022	154547	22196	80622	-157423
	380C2F2	22195	72953	154561	22196	79778	-156842
	380C2F3	22195	72866	154581	22196	78748	-156192
	RTG	0	0	0	6706	23266	-46360
NL1/1a	GW / opgw	2606	21959	34263	2606	21959	-34263
Wind, 10°C	380C1F1	9600	66310	106202	9600	66310	-106202
Permanent loads yg= 1.2	380C1F2	9599	62849	101641	9599	62849	-101641
Wind angle: 90°	380C1F3	9598	58499	95940	9598	58499	-95940
	380C2F1	19200	132620	212405	19200	132620	-212405
	380C2F2	19198	125698	203282	19198	125698	-203282
	380C2F3	19196	116998	191880	19196	116998	-191880
	RTG	0	0	0	5203	32525	-53309
NL1/1b	GW / opgw	2603	11087	21213	2603	11087	-21213
Wind, -20°C	380C1F1	9588	39347	77188	9588	39347	-77188
Permanent loads yg= 1.2	380C1F2	9588	38928	76860	9588	38928	-76860
Wind angle: 90°	380C1F3	9588	38417	76491	9588	38417	-76491
	380C2F1	19176	78694	154377	19176	78694	-154377
	380C2F2	19176	77855	153721	19176	77855	-153721
	380C2F3	19176	76835	152981	19176	76835	-152981
	RTG	0	0	0	5198	20592	-40874
NL1/3	GW / opgw	10508	34640	61099	10508	34640	-61099
Wind, -5°C	380C1F1	16536	63830	116779	16536	63830	-116779
Permanent loads yg= 1.2	380C1F2	16536	62519	115565	16536	62519	-115565
Wind angle: 90°	380C1F3	16535	60921	114164	16535	60921	-114164
	380C2F1	33072	127659	233558	33072	127659	-233558
	380C2F2	33071	125039	231130	33071	125039	-231130
	380C2F3	33070	121843	228327	33070	121843	-228327
	RTG	0	0	0	21041	62718	-117647
NL1/4	GW / opgw	3357	12186	23568	3357	12186	-23568
Construction/maintenance, +5°C	380C1F1	11098	39939	78455	11098	39939	-78455
Permanent loads yg= 1.2	380C1F2	11098	39558	78208	11098	39558	-78208
Wind angle: 90°	380C1F3	11098	39092	77933	11098	39092	-77933
	380C2F1	22196	79878	156909	22196	79878	-156909
	380C2F2	22196	79116	156416	22196	79116	-156416
	380C2F3	22196	78184	155867	22196	78184	-155867
	RTG	0	0	0	6706	23114	-46280
NL1/1a	GW / opgw	2607	23154	35861	2604	9568	-18694
Wind, 10°C	380C1F1	9601	69596	110545	9593	34065	-67929
Permanent loads yg= 1.2	380C1F2	9600	65859	105608	9593	33810	-67788
Wind angle: -45°	380C1F3	9599	61150	99408	9593	33497	-67634
	380C2F1	19201	139191	221089	19186	68130	-135858
	380C2F2	19199	131719	211215	19186	67619	-135576
	380C2F3	19197	122299	198817	19186	66994	-135268
	RTG	0	0	0	5200	18252	-36800
NL1/1b	GW / opgw	2603	11253	21378	2603	9628	-20282
Wind, -20°C	380C1F1	9588	39756	77527	9588	35663	-75456
Permanent loads yg= 1.2	380C1F2	9588	39292	77144	9588	35628	-75461
Wind angle: -45°	380C1F3	9588	38726	76710	9588	35583	-75469
	380C2F1	19176	79513	155054	19175	71327	-150912
	380C2F2	19176	78583	154288	19175	71256	-150923
	380C2F3	19176	77452	153420	19175	71167	-150938
	RTG	0	0	0	5198	18989	-40255
NL1/3	GW / opgw	10508	35391	61721	10505	27749	-57630
Wind, -5°C	380C1F1	16536	65106	118008	16533	52448	-109613
Permanent loads yg= 1.2	380C1F2	16536	63657	116616	16533	52345	-109618
Wind angle: -45°	380C1F3	16535	61889	115001	16533	52216	-109630
	380C2F1	33073	130213	236016	33067	104896	-219225
	380C2F2	33072	127314	233232	33067	104689	-219236
	380C2F3	33071	123777	230001	33067	104431	-219259
	RTG	0	0	0	21038	54985	-115516

NL1/4	GW / opgw	3357	12327	23679	3356	10903	-23016
Construction/maintenance, +5°C	380C1F1	11098	40311	78712	11098	36511	-77274
Permanent loads yg= 1.2	380C1F2	11098	39889	78421	11098	36476	-77281
Wind angle: -45°	380C1F3	11098	39374	78096	11098	36433	-77291
	380C2F1	22196	80622	157423	22195	73022	-154547
	380C2F2	22196	79778	156842	22195	72953	-154561
	380C2F3	22196	78748	156192	22195	72866	-154581
	RTG	0	0	0	6705	21664	-45990
NL1//1a	GW / opgw	1953	8705	15881	1953	8705	-15881
Wind, 10°C	380C1F1	7194	29730	55935	7194	29730	-55935
Permanent loads yg= 0.9	380C1F2	7194	29187	55392	7194	29187	-55392
Wind angle: 0°	380C1F3	7193	28528	54767	7193	28528	-54767
	380C2F1	14387	59460	111871	14387	59460	-111871
	380C2F2	14387	58374	110784	14387	58374	-110784
	380C2F3	14387	57056	109533	14387	57056	-109533
	RTG	0	0	0	3900	15536	-29745
NL1/1b	GW / opgw	1952	7742	16046	1952	7742	-16046
Wind, -20°C	380C1F1	7189	28728	60045	7189	28728	-60045
Permanent loads yg= 0.9	380C1F2	7189	28666	60036	7189	28666	-60036
Wind angle: 0°	380C1F3	7189	28589	60028	7189	28589	-60028
	380C2F1	14378	57457	120090	14378	57457	-120090
	380C2F2	14378	57333	120072	14378	57333	-120072
	380C2F3	14378	57179	120057	14378	57179	-120057
	RTG	0	0	0	3898	15139	-31751
NL1/3	GW / opgw	9851	26947	54922	9851	26947	-54922
Wind, -5°C	380C1F1	14132	47287	97037	14132	47287	-97037
Permanent loads yg= 0.9	380C1F2	14132	47108	97000	14132	47108	-97000
Wind angle: 0°	380C1F3	14132	46886	96965	14132	46886	-96965
	380C2F1	28263	94574	194074	28263	94574	-194074
	380C2F2	28263	94216	194000	28263	94216	-194000
	380C2F3	28263	93772	193929	28263	93772	-193929
	RTG	0	0	0	19733	53002	-109999
NL1/4	GW / opgw	2705	9221	19217	2705	9221	-19217
Construction/maintenance, +5°C	380C1F1	8697	30166	63127	8697	30166	-63127
Permanent loads yg= 0.9	380C1F2	8697	30107	63126	8697	30107	-63126
Wind angle: 0°	380C1F3	8697	30035	63127	8697	30035	-63127
	380C2F1	17395	60332	126253	17395	60332	-126253
	380C2F2	17395	60215	126251	17395	60215	-126251
	380C2F3	17395	60069	126254	17395	60069	-126254
	RTG	0	0	0	5404	18223	-38365
NL1/6	GW / opgw	1953	6676	14317	1953	6676	-14317
Permanent, +10°C	380C1F1	7193	24632	52824	7193	24632	-52824
Permanent loads yg= 0.9	380C1F2	7193	24632	52824	7193	24632	-52824
	380C1F3	7193	24632	52824	7193	24632	-52824
	380C2F1	14386	49264	105648	14386	49264	-105648
	380C2F2	14386	49264	105648	14386	49264	-105648
	380C2F3	14386	49264	105648	14386	49264	-105648
	RTG	0	0	0	3899	13331	-28589
NL1/1a	GW / opgw	1953	7810	14924	1955	22625	-34727
Wind, 10°C	380C1F1	7193	27526	53908	7200	67067	-105124
Permanent loads yg= 0.9	380C1F2	7193	27232	53683	7199	63114	-99723
Wind angle: 45°	380C1F3	7193	26873	53429	7198	58086	-92842
	380C2F1	14387	55053	107816	14400	134133	-210248
	380C2F2	14387	54463	107365	14398	126227	-199445
	380C2F3	14387	53746	106859	14397	116172	-185685
	RTG	0	0	0	3902	32369	-51741
NL1/1b	GW / opgw	1952	7643	16026	1952	9539	-17702
Wind, -20°C	380C1F1	7189	28468	60025	7190	33185	-63435
Permanent loads yg= 0.9	380C1F2	7189	28430	60026	7189	32632	-62864
Wind angle: 45°	380C1F3	7189	28384	60029	7189	31962	-62206
	380C2F1	14378	56935	120050	14379	66369	-126871
	380C2F2	14378	56860	120052	14379	65264	-125729
	380C2F3	14378	56767	120058	14379	63924	-124412
	RTG	0	0	0	3898	17049	-33031

NL1/3	GW / opgw	9851	26485	54921	9855	34347	-59483
Wind, -5°C	380C1F1	14132	46536	96935	14135	60233	-107560
Permanent loads yg= 0.9	380C1F2	14132	46429	96933	14134	58652	-105887
Wind angle: 45°	380C1F3	14132	46296	96935	14134	56722	-103924
	380C2F1	28263	93072	193870	28269	120465	-215119
	380C2F2	28263	92858	193865	28268	117305	-211774
	380C2F3	28263	92592	193870	28267	113444	-207849
	RTG	0	0	0	19736	61208	-113147
NL1/4	GW / opgw	2705	9131	19216	2705	10700	-20190
Construction/maintenance, +5°C	380C1F1	8697	29918	63136	8698	34131	-65460
Permanent loads yg= 0.9	380C1F2	8697	29883	63140	8698	33649	-65041
Wind angle: 45°	380C1F3	8697	29838	63147	8698	33064	-64565
	380C2F1	17395	59837	126272	17396	68262	-130921
	380C2F2	17395	59765	126281	17395	67299	-130083
	380C2F3	17395	59676	126295	17395	66128	-129130
	RTG	0	0	0	5404	19845	-39024
NL1/1a	GW / opgw	1955	21387	33035	1955	21387	-33035
Wind, 10°C	380C1F1	7199	63592	100377	7199	63592	-100377
Permanent loads yg= 0.9	380C1F2	7199	59907	95334	7199	59907	-95334
Wind angle: 90°	380C1F3	7198	55231	88935	7198	55231	-88935
	380C2F1	14398	127184	200753	14398	127184	-200753
	380C2F2	14397	119814	190669	14397	119814	-190669
	380C2F3	14396	110461	177870	14396	110461	-177870
	RTG	0	0	0	3902	30745	-49493
NL1/1b	GW / opgw	1952	9341	17470	1952	9341	-17470
Wind, -20°C	380C1F1	7189	32698	62931	7189	32698	-62931
Permanent loads yg= 0.9	380C1F2	7189	32201	62436	7189	32201	-62436
Wind angle: 90°	380C1F3	7189	31598	61867	7189	31598	-61867
	380C2F1	14379	65395	125862	14379	65395	-125862
	380C2F2	14379	64401	124871	14379	64401	-124871
	380C2F3	14379	63195	123734	14379	63195	-123734
	RTG	0	0	0	3898	16842	-32833
NL1/3	GW / opgw	9854	33571	58809	9854	33571	-58809
Wind, -5°C	380C1F1	14134	58841	106083	14134	58841	-106083
Permanent loads yg= 0.9	380C1F2	14134	57411	104613	14134	57411	-104613
Wind angle: 90°	380C1F3	14133	55666	102896	14133	55666	-102896
	380C2F1	28269	117681	212167	28269	117681	-212167
	380C2F2	28268	114822	209226	28268	114822	-209226
	380C2F3	28267	111332	205793	28267	111332	-205793
	RTG	0	0	0	19736	60362	-112598
NL1/4	GW / opgw	2705	10541	20041	2705	10541	-20041
Construction/maintenance, +5°C	380C1F1	8698	33707	65090	8698	33707	-65090
Permanent loads yg= 0.9	380C1F2	8698	33272	64730	8698	33272	-64730
Wind angle: 90°	380C1F3	8698	32745	64323	8698	32745	-64323
	380C2F1	17396	67413	130180	17396	67413	-130180
	380C2F2	17395	66545	129461	17395	66545	-129461
	380C2F3	17395	65489	128646	17395	65489	-128646
	RTG	0	0	0	5404	19676	-38908
NL1/1a	GW / opgw	1955	22625	34727	1953	7810	-14924
Wind, 10°C	380C1F1	7200	67067	105124	7193	27526	-53908
Permanent loads yg= 0.9	380C1F2	7199	63114	99723	7193	27232	-53683
Wind angle: -45°	380C1F3	7198	58086	92842	7193	26873	-53429
	380C2F1	14400	134133	210248	14387	55053	-107816
	380C2F2	14398	126227	199445	14387	54463	-107365
	380C2F3	14397	116172	185685	14387	53746	-106859
	RTG	0	0	0	3900	14595	-28959
NL1/1b	GW / opgw	1952	9539	17702	1952	7643	-16026
Wind, -20°C	380C1F1	7190	33185	63435	7189	28468	-60025
Permanent loads yg= 0.9	380C1F2	7189	32632	62864	7189	28430	-60026
Wind angle: -45°	380C1F3	7189	31962	62206	7189	28384	-60029
	380C2F1	14379	66369	126871	14378	56935	-120050
	380C2F2	14379	65264	125729	14378	56860	-120052
	380C2F3	14379	63924	124412	14378	56767	-120058
	RTG	0	0	0	3898	15023	-31749

NL1/3	GW / opgw	9855	34347	59483	9851	26485	-54921
Wind, -5°C	380C1F1	14135	60233	107560	14132	46536	-96935
Permanent loads yg= 0.9	380C1F2	14134	58652	105887	14132	46429	-96933
Wind angle: -45°	380C1F3	14134	56722	103924	14132	46296	-96935
	380C2F1	28269	120465	215119	28263	93072	-193870
	380C2F2	28268	117305	211774	28263	92858	-193865
	380C2F3	28267	113444	207849	28263	92592	-193870
	RTG	0	0	0	19733	52449	-110079
NL1/4	GW / opgw	2705	10700	20190	2705	9131	-19216
Construction/maintenance, +5°C	380C1F1	8698	34131	65460	8697	29918	-63136
Permanent loads yg= 0.9	380C1F2	8698	33649	65041	8697	29883	-63140
Wind angle: -45°	380C1F3	8698	33064	64565	8697	29838	-63147
	380C2F1	17396	68262	130921	17395	59837	-126272
	380C2F2	17395	67299	130083	17395	59765	-126281
	380C2F3	17395	66128	129130	17395	59676	-126295
	RTG	0	0	0	5404	18115	-38381

ZWW4HL450

Loadcases for tower strength (Special limit state)

		Ahead			Back		
Loadcase according to 50341-3-15	Att. Point	Vertical [N]	Transversal [N]	Longitudinal [N]	Vertical [N]	Transversal [N]	Longitudinal [N]
NL3/1a	GW / opgw	0	0	0	2604	9311	-18517
Wind, 10°C	380C1F1	0	0	0	9593	33418	-67599
Permanent loads yg= 1.2	380C1F2	0	0	0	9593	33231	-67520
Wind angle: 0°	380C1F3	0	0	0	9593	33001	-67437
	380C2F1	0	0	0	19186	66837	-135197
	380C2F2	0	0	0	19186	66463	-135041
	380C2F3	0	0	0	19186	66003	-134874
	RTG	0	0	0	5200	17971	-36681
NL3/1b	GW / opgw	0	0	0	2603	9665	-20282
Wind, -20°C	380C1F1	0	0	0	9588	35764	-75445
Permanent loads yg= 1.2	380C1F2	0	0	0	9588	35720	-75449
Wind angle: 0°	380C1F3	0	0	0	9588	35664	-75456
	380C2F1	0	0	0	19175	71528	-150891
	380C2F2	0	0	0	19175	71439	-150899
	380C2F3	0	0	0	19175	71328	-150912
	RTG	0	0	0	5198	19034	-40248
NL3/3	GW / opgw	0	0	0	4371	14849	-29555
Wind, -5°C	380C1F1	0	0	0	11145	39104	-80365
Permanent loads yg= 1.2	380C1F2	0	0	0	11145	38958	-80328
Wind angle: 0°	380C1F3	0	0	0	11145	38777	-80292
	380C2F1	0	0	0	22290	78209	-160729
	380C2F2	0	0	0	22290	77916	-160657
	380C2F3	0	0	0	22290	77554	-160585
	RTG	0	0	0	8742	28711	-58644
NL3/4	GW / opgw	0	0	0	3206	10537	-22151
Construction/maintenance, +5°C	380C1F1	0	0	0	10797	35804	-75530
Permanent loads yg= 1.2	380C1F2	0	0	0	10797	35761	-75537
Wind angle: 0°	380C1F3	0	0	0	10796	35706	-75546
	380C2F1	0	0	0	21593	71608	-151061
	380C2F2	0	0	0	21593	71521	-151073
	380C2F3	0	0	0	21593	71413	-151092
	RTG	0	0	0	6404	20903	-44254
NL3/1a	GW / opgw	0	0	0	2605	14990	-24978
Wind, 10°C	380C1F1	0	0	0	9596	47673	-82119
Permanent loads yg= 1.2	380C1F2	0	0	0	9595	45940	-80001
Wind angle: 45°	380C1F3	0	0	0	9595	43811	-77461
	380C2F1	0	0	0	19192	95346	-164238
	380C2F2	0	0	0	19191	91880	-160002
	380C2F3	0	0	0	19190	87622	-154922
	RTG	0	0	0	5201	24138	-42576
NL3/1b	GW / opgw	0	0	0	2603	10791	-20938
Wind, -20°C	380C1F1	0	0	0	9588	38618	-76632
Permanent loads yg= 1.2	380C1F2	0	0	0	9588	38279	-76397
Wind angle: 45°	380C1F3	0	0	0	9588	37866	-76134
	380C2F1	0	0	0	19176	77236	-153263
	380C2F2	0	0	0	19176	76559	-152793
	380C2F3	0	0	0	19176	75733	-152269
	RTG	0	0	0	5198	20279	-40663
NL3/3	GW / opgw	0	0	0	4373	23024	-38048
Wind, -5°C	380C1F1	0	0	0	11147	49876	-89677
Permanent loads yg= 1.2	380C1F2	0	0	0	11147	48552	-88211
Wind angle: 45°	380C1F3	0	0	0	11146	46937	-86488
	380C2F1	0	0	0	22294	99752	-179353
	380C2F2	0	0	0	22294	97105	-176421
	380C2F3	0	0	0	22293	93874	-172976
	RTG	0	0	0	8745	37611	-66184
NL3/4	GW / opgw	0	0	0	3206	11551	-22566
Construction/maintenance, +5°C	380C1F1	0	0	0	10797	38497	-76368
Permanent loads yg= 1.2	380C1F2	0	0	0	10797	38183	-76186
Wind angle: 45°	380C1F3	0	0	0	10797	37799	-75986
	380C2F1	0	0	0	21594	76993	-152736
	380C2F2	0	0	0	21593	76365	-152373
	380C2F3	0	0	0	21593	75598	-151972
	RTG	0	0	0	6404	22051	-44461
NL3/1a	GW / opgw	0	0	0	2605	14398	-24209
Wind, 10°C	380C1F1	0	0	0	9595	46147	-80252
Permanent loads yg= 1.2	380C1F2	0	0	0	9595	44572	-78360
Wind angle: 90°	380C1F3	0	0	0	9595	42641	-76103
	380C2F1	0	0	0	19191	92294	-160503
	380C2F2	0	0	0	19190	89144	-156719
	380C2F3	0	0	0	19189	85281	-152205
	RTG	0	0	0	5201	23469	-41783

NL3/1b	GW / opgw	0	0	0	2603	10671	-20833
Wind, -20°C	380C1F1	0	0	0	9588	38320	-76424
Permanent loads yg= 1.2	380C1F2	0	0	0	9588	38014	-76225
Wind angle: 90°	380C1F3	0	0	0	9588	37640	-76003
	380C2F1	0	0	0	19176	76639	-152848
	380C2F2	0	0	0	19176	76027	-152449
	380C2F3	0	0	0	19176	75281	-152007
	RTG	0	0	0	5198	20150	-40585
NL3/3	GW / opgw	0	0	0	4373	22176	-37021
Wind, -5°C	380C1F1	0	0	0	11147	48710	-88383
Permanent loads yg= 1.2	380C1F2	0	0	0	11147	47513	-87093
Wind angle: 90°	380C1F3	0	0	0	11146	46054	-85584
	380C2F1	0	0	0	22294	97420	-176766
	380C2F2	0	0	0	22293	95026	-174186
	380C2F3	0	0	0	22292	92109	-171168
	RTG	0	0	0	8744	36656	-65146
NL3/4	GW / opgw	0	0	0	3206	11445	-22493
Construction/maintenance, +5°C	380C1F1	0	0	0	10797	38220	-76207
Permanent loads yg= 1.2	380C1F2	0	0	0	10797	37936	-76055
Wind angle: 90°	380C1F3	0	0	0	10797	37588	-75888
	380C2F1	0	0	0	21594	76440	-152414
	380C2F2	0	0	0	21593	75872	-152109
	380C2F3	0	0	0	21593	75175	-151775
	RTG	0	0	0	6404	21936	-44412
NL3/1a	GW / opgw	0	0	0	2604	9007	-18365
Wind, 10°C	380C1F1	0	0	0	9593	32643	-67338
Permanent loads yg= 1.2	380C1F2	0	0	0	9593	32534	-67317
Wind angle: -45°	380C1F3	0	0	0	9593	32400	-67297
	380C2F1	0	0	0	19186	65285	-134676
	380C2F2	0	0	0	19186	65068	-134634
	380C2F3	0	0	0	19186	64800	-134594
	RTG	0	0	0	5200	17631	-36594
NL3/1b	GW / opgw	0	0	0	2603	9595	-20284
Wind, -20°C	380C1F1	0	0	0	9588	35575	-75471
Permanent loads yg= 1.2	380C1F2	0	0	0	9588	35547	-75477
Wind angle: -45°	380C1F3	0	0	0	9588	35512	-75485
	380C2F1	0	0	0	19175	71149	-150942
	380C2F2	0	0	0	19175	71094	-150953
	380C2F3	0	0	0	19175	71025	-150969
	RTG	0	0	0	5198	18949	-40263
NL3/3	GW / opgw	0	0	0	4371	14397	-29375
Wind, -5°C	380C1F1	0	0	0	11145	38492	-80258
Permanent loads yg= 1.2	380C1F2	0	0	0	11145	38405	-80253
Wind angle: -45°	380C1F3	0	0	0	11145	38297	-80252
	380C2F1	0	0	0	22290	76984	-160516
	380C2F2	0	0	0	22290	76811	-160506
	380C2F3	0	0	0	22290	76594	-160504
	RTG	0	0	0	8742	28200	-58558
NL3/4	GW / opgw	0	0	0	3206	10470	-22161
Construction/maintenance, +5°C	380C1F1	0	0	0	10796	35619	-75565
Permanent loads yg= 1.2	380C1F2	0	0	0	10796	35592	-75572
Wind angle: -45°	380C1F3	0	0	0	10796	35557	-75581
	380C2F1	0	0	0	21593	71237	-151130
	380C2F2	0	0	0	21593	71183	-151143
	380C2F3	0	0	0	21593	71115	-151161
	RTG	0	0	0	6404	20820	-44274
NL3/1a	GW / opgw	0	0	0	1953	7510	-14656
Wind, 10°C	380C1F1	0	0	0	7193	26783	-53370
Permanent loads yg= 0.9	380C1F2	0	0	0	7193	26570	-53236
Wind angle: 0°	380C1F3	0	0	0	7193	26310	-53089
	380C2F1	0	0	0	14387	53566	-106740
	380C2F2	0	0	0	14386	53141	-106473
	380C2F3	0	0	0	14386	52621	-106177
	RTG	0	0	0	3900	14276	-28757
NL3/1b	GW / opgw	0	0	0	1952	7684	-16032
Wind, -20°C	380C1F1	0	0	0	7189	28574	-60027
Permanent loads yg= 0.9	380C1F2	0	0	0	7189	28527	-60025
Wind angle: 0°	380C1F3	0	0	0	7189	28468	-60025
	380C2F1	0	0	0	14378	57149	-120055
	380C2F2	0	0	0	14378	57054	-120051
	380C2F3	0	0	0	14378	56936	-120050
	RTG	0	0	0	3898	15071	-31748

NL3/3	GW / opgw	0	0	0	3719	13241	-26105
Wind, -5°C	380C1F1	0	0	0	8745	32493	-66188
Permanent loads yg= 0.9	380C1F2	0	0	0	8745	32333	-66121
Wind angle: 0°	380C1F3	0	0	0	8745	32136	-66050
	380C2F1	0	0	0	17490	64986	-132375
	380C2F2	0	0	0	17490	64666	-132242
	380C2F3	0	0	0	17490	64272	-132101
	RTG	0	0	0	7441	25426	-51599
NL3/4	GW / opgw	0	0	0	2554	8745	-18308
Construction/maintenance, +5°C	380C1F1	0	0	0	8396	29164	-61291
Permanent loads yg= 0.9	380C1F2	0	0	0	8396	29119	-61294
Wind angle: 0°	380C1F3	0	0	0	8396	29062	-61298
	380C2F1	0	0	0	16793	58328	-122583
	380C2F2	0	0	0	16793	58238	-122587
	380C2F3	0	0	0	16793	58124	-122596
	RTG	0	0	0	5103	17311	-36553
NL3/1a	GW / opgw	0	0	0	1954	13991	-22837
Wind, 10°C	380C1F1	0	0	0	7196	43304	-72752
Permanent loads yg= 0.9	380C1F2	0	0	0	7195	41344	-70148
Wind angle: 45°	380C1F3	0	0	0	7195	38913	-66961
	380C2F1	0	0	0	14392	86607	-145504
	380C2F2	0	0	0	14391	82689	-140296
	380C2F3	0	0	0	14390	77827	-133922
	RTG	0	0	0	3900	21457	-36828
NL3/1b	GW / opgw	0	0	0	1952	8989	-17075
Wind, -20°C	380C1F1	0	0	0	7189	31834	-62085
Permanent loads yg= 0.9	380C1F2	0	0	0	7189	31435	-61720
Wind angle: 45°	380C1F3	0	0	0	7189	30951	-61305
	380C2F1	0	0	0	14379	63668	-124170
	380C2F2	0	0	0	14379	62870	-123440
	380C2F3	0	0	0	14378	61901	-122609
	RTG	0	0	0	3898	16474	-32504
NL3/3	GW / opgw	0	0	0	3721	22075	-36015
Wind, -5°C	380C1F1	0	0	0	8747	44795	-78783
Permanent loads yg= 0.9	380C1F2	0	0	0	8747	43289	-76926
Wind angle: 45°	380C1F3	0	0	0	8747	41442	-74706
	380C2F1	0	0	0	17494	89590	-157566
	380C2F2	0	0	0	17494	86578	-153852
	380C2F3	0	0	0	17493	82884	-149412
	RTG	0	0	0	7443	35116	-60836
NL3/4	GW / opgw	0	0	0	2554	9863	-18946
Construction/maintenance, +5°C	380C1F1	0	0	0	8397	32140	-62738
Permanent loads yg= 0.9	380C1F2	0	0	0	8397	31783	-62464
Wind angle: 45°	380C1F3	0	0	0	8397	31349	-62156
	380C2F1	0	0	0	16793	64280	-125476
	380C2F2	0	0	0	16793	63566	-124928
	380C2F3	0	0	0	16793	62698	-124311
	RTG	0	0	0	5103	18550	-36954
NL3/1a	GW / opgw	0	0	0	1953	13342	-21945
Wind, 10°C	380C1F1	0	0	0	7195	41579	-70459
Permanent loads yg= 0.9	380C1F2	0	0	0	7195	39785	-68097
Wind angle: 90°	380C1F3	0	0	0	7195	37566	-65223
	380C2F1	0	0	0	14391	83159	-140917
	380C2F2	0	0	0	14390	79571	-136195
	380C2F3	0	0	0	14390	75132	-130445
	RTG	0	0	0	3900	20689	-35823
NL3/1b	GW / opgw	0	0	0	1952	8846	-16921
Wind, -20°C	380C1F1	0	0	0	7189	31482	-61763
Permanent loads yg= 0.9	380C1F2	0	0	0	7189	31123	-61449
Wind angle: 90°	380C1F3	0	0	0	7189	30687	-61093
	380C2F1	0	0	0	14379	62965	-123525
	380C2F2	0	0	0	14378	62246	-122898
	380C2F3	0	0	0	14378	61374	-122186
	RTG	0	0	0	3898	16324	-32380
NL3/3	GW / opgw	0	0	0	3721	21176	-34877
Wind, -5°C	380C1F1	0	0	0	8747	43469	-77146
Permanent loads yg= 0.9	380C1F2	0	0	0	8747	42102	-75490
Wind angle: 90°	380C1F3	0	0	0	8746	40429	-73522
	380C2F1	0	0	0	17494	86937	-154291
	380C2F2	0	0	0	17493	84203	-150981
	380C2F3	0	0	0	17493	80858	-147044
	RTG	0	0	0	7442	34079	-59623

NL3/4	GW / opgw	0	0	0	2554	9743	-18844
Construction/maintenance, +5°C	380C1F1	0	0	0	8397	31826	-62496
Permanent loads yg= 0.9	380C1F2	0	0	0	8397	31504	-62262
Wind angle: 90°	380C1F3	0	0	0	8397	31111	-62000
	380C2F1	0	0	0	16793	63651	-124991
	380C2F2	0	0	0	16793	63008	-124524
	380C2F3	0	0	0	16793	62223	-124001
	RTG	0	0	0	5103	18422	-36878
NL3/1a	GW / opgw	0	0	0	1953	7161	-14408
Wind, 10°C	380C1F1	0	0	0	7193	25909	-52899
Permanent loads yg= 0.9	380C1F2	0	0	0	7193	25789	-52854
Wind angle: -45°	380C1F3	0	0	0	7193	25642	-52805
	380C2F1	0	0	0	14386	51819	-105799
	380C2F2	0	0	0	14386	51579	-105707
	380C2F3	0	0	0	14386	51284	-105610
	RTG	0	0	0	3900	13898	-28588
NL3/1b	GW / opgw	0	0	0	1952	7608	-16024
Wind, -20°C	380C1F1	0	0	0	7189	28374	-60030
Permanent loads yg= 0.9	380C1F2	0	0	0	7189	28346	-60033
Wind angle: -45°	380C1F3	0	0	0	7189	28309	-60038
	380C2F1	0	0	0	14378	56749	-120060
	380C2F2	0	0	0	14378	56691	-120066
	380C2F3	0	0	0	14378	56619	-120076
	RTG	0	0	0	3898	14981	-31754
NL3/3	GW / opgw	0	0	0	3719	12755	-25855
Wind, -5°C	380C1F1	0	0	0	8745	31828	-65967
Permanent loads yg= 0.9	380C1F2	0	0	0	8745	31735	-65949
Wind angle: -45°	380C1F3	0	0	0	8745	31620	-65933
	380C2F1	0	0	0	17490	63656	-131934
	380C2F2	0	0	0	17490	63470	-131899
	380C2F3	0	0	0	17490	63240	-131865
	RTG	0	0	0	7441	24887	-51454
NL3/4	GW / opgw	0	0	0	2554	8675	-18311
Construction/maintenance, +5°C	380C1F1	0	0	0	8396	28972	-61310
Permanent loads yg= 0.9	380C1F2	0	0	0	8396	28944	-61315
Wind angle: -45°	380C1F3	0	0	0	8396	28908	-61322
	380C2F1	0	0	0	16793	57943	-122620
	380C2F2	0	0	0	16793	57887	-122630
	380C2F3	0	0	0	16793	57817	-122644
	RTG	0	0	0	5103	17227	-36568

ZWW4HL450

Loadcases for tower strength (Special limit state)

		Ahead			Back		
Loadcase according to 50341-3-15	Att. Point	Vertical [N]	Transversal [N]	Longitudinal [N]	Vertical [N]	Transversal [N]	Longitudinal [N]
NL3/1a	GW / opgw	2604	9311	18517	0	0	0
Wind, 10°C	380C1F1	9593	33418	67599	0	0	0
Permanent loads yg= 1.2	380C1F2	9593	33231	67520	0	0	0
Wind angle: 0°	380C1F3	9593	33001	67437	0	0	0
	380C2F1	19186	66837	135197	0	0	0
	380C2F2	19186	66463	135041	0	0	0
	380C2F3	19186	66003	134874	0	0	0
	RTG	0	0	0	0	0	0
NL3/1b	GW / opgw	2603	9665	20282	0	0	0
Wind, -20°C	380C1F1	9588	35764	75445	0	0	0
Permanent loads yg= 1.2	380C1F2	9588	35720	75449	0	0	0
Wind angle: 0°	380C1F3	9588	35664	75456	0	0	0
	380C2F1	19175	71528	150891	0	0	0
	380C2F2	19175	71439	150899	0	0	0
	380C2F3	19175	71328	150912	0	0	0
	RTG	0	0	0	0	0	0
NL3/3	GW / opgw	4371	14849	29555	0	0	0
Wind, -5°C	380C1F1	11145	39104	80365	0	0	0
Permanent loads yg= 1.2	380C1F2	11145	38958	80328	0	0	0
Wind angle: 0°	380C1F3	11145	38777	80292	0	0	0
	380C2F1	22290	78209	160729	0	0	0
	380C2F2	22290	77916	160657	0	0	0
	380C2F3	22290	77554	160585	0	0	0
	RTG	0	0	0	0	0	0
NL3/4	GW / opgw	3206	10537	22151	0	0	0
Construction/maintenance, +5°C	380C1F1	10797	35804	75530	0	0	0
Permanent loads yg= 1.2	380C1F2	10797	35761	75537	0	0	0
Wind angle: 0°	380C1F3	10796	35706	75546	0	0	0
	380C2F1	21593	71608	151061	0	0	0
	380C2F2	21593	71521	151073	0	0	0
	380C2F3	21593	71413	151092	0	0	0
	RTG	0	0	0	0	0	0
NL3/1a	GW / opgw	2604	9007	18365	0	0	0
Wind, 10°C	380C1F1	9593	32643	67338	0	0	0
Permanent loads yg= 1.2	380C1F2	9593	32534	67317	0	0	0
Wind angle: 45°	380C1F3	9593	32400	67297	0	0	0
	380C2F1	19186	65285	134676	0	0	0
	380C2F2	19186	65068	134634	0	0	0
	380C2F3	19186	64800	134594	0	0	0
	RTG	0	0	0	0	0	0
NL3/1b	GW / opgw	2603	9595	20284	0	0	0
Wind, -20°C	380C1F1	9588	35575	75471	0	0	0
Permanent loads yg= 1.2	380C1F2	9588	35547	75477	0	0	0
Wind angle: 45°	380C1F3	9588	35512	75485	0	0	0
	380C2F1	19175	71149	150942	0	0	0
	380C2F2	19175	71094	150953	0	0	0
	380C2F3	19175	71025	150969	0	0	0
	RTG	0	0	0	0	0	0
NL3/3	GW / opgw	4371	14397	29375	0	0	0
Wind, -5°C	380C1F1	11145	38492	80258	0	0	0
Permanent loads yg= 1.2	380C1F2	11145	38405	80253	0	0	0
Wind angle: 45°	380C1F3	11145	38297	80252	0	0	0
	380C2F1	22290	76984	160516	0	0	0
	380C2F2	22290	76811	160506	0	0	0
	380C2F3	22290	76594	160504	0	0	0
	RTG	0	0	0	0	0	0
NL3/4	GW / opgw	3206	10470	22161	0	0	0
Construction/maintenance, +5°C	380C1F1	10796	35619	75565	0	0	0
Permanent loads yg= 1.2	380C1F2	10796	35592	75572	0	0	0
Wind angle: 45°	380C1F3	10796	35557	75581	0	0	0
	380C2F1	21593	71237	151130	0	0	0
	380C2F2	21593	71183	151143	0	0	0
	380C2F3	21593	71115	151161	0	0	0
	RTG	0	0	0	0	0	0
NL3/1a	GW / opgw	2605	14398	24209	0	0	0
Wind, 10°C	380C1F1	9595	46147	80252	0	0	0
Permanent loads yg= 1.2	380C1F2	9595	44572	78360	0	0	0
Wind angle: 90°	380C1F3	9595	42641	76103	0	0	0
	380C2F1	19191	92294	160503	0	0	0
	380C2F2	19190	89144	156719	0	0	0
	380C2F3	19189	85281	152205	0	0	0
	RTG	0	0	0	0	0	0

NL3/1b	GW / opgw	2603	10671	20833	0	0	0
Wind, -20°C	380C1F1	9588	38320	76424	0	0	0
Permanent loads yg= 1.2	380C1F2	9588	38014	76225	0	0	0
Wind angle: 90°	380C1F3	9588	37640	76003	0	0	0
	380C2F1	19176	76639	152848	0	0	0
	380C2F2	19176	76027	152449	0	0	0
	380C2F3	19176	75281	152007	0	0	0
	RTG	0	0	0	0	0	0
NL3/3	GW / opgw	4373	22176	37021	0	0	0
Wind, -5°C	380C1F1	11147	48710	88383	0	0	0
Permanent loads yg= 1.2	380C1F2	11147	47513	87093	0	0	0
Wind angle: 90°	380C1F3	11146	46054	85584	0	0	0
	380C2F1	22294	97420	176766	0	0	0
	380C2F2	22293	95026	174186	0	0	0
	380C2F3	22292	92109	171168	0	0	0
	RTG	0	0	0	0	0	0
NL3/4	GW / opgw	3206	11445	22493	0	0	0
Construction/maintenance, +5°C	380C1F1	10797	38220	76207	0	0	0
Permanent loads yg= 1.2	380C1F2	10797	37936	76055	0	0	0
Wind angle: 90°	380C1F3	10797	37588	75888	0	0	0
	380C2F1	21594	76440	152414	0	0	0
	380C2F2	21593	75872	152109	0	0	0
	380C2F3	21593	75175	151775	0	0	0
	RTG	0	0	0	0	0	0
NL3/1a	GW / opgw	2605	14990	24978	0	0	0
Wind, 10°C	380C1F1	9596	47673	82119	0	0	0
Permanent loads yg= 1.2	380C1F2	9595	45940	80001	0	0	0
Wind angle: -45°	380C1F3	9595	43811	77461	0	0	0
	380C2F1	19192	95346	164238	0	0	0
	380C2F2	19191	91880	160002	0	0	0
	380C2F3	19190	87622	154922	0	0	0
	RTG	0	0	0	0	0	0
NL3/1b	GW / opgw	2603	10791	20938	0	0	0
Wind, -20°C	380C1F1	9588	38618	76632	0	0	0
Permanent loads yg= 1.2	380C1F2	9588	38279	76397	0	0	0
Wind angle: -45°	380C1F3	9588	37866	76134	0	0	0
	380C2F1	19176	77236	153263	0	0	0
	380C2F2	19176	76559	152793	0	0	0
	380C2F3	19176	75733	152269	0	0	0
	RTG	0	0	0	0	0	0
NL3/3	GW / opgw	4373	23024	38048	0	0	0
Wind, -5°C	380C1F1	11147	49876	89677	0	0	0
Permanent loads yg= 1.2	380C1F2	11147	48552	88211	0	0	0
Wind angle: -45°	380C1F3	11146	46937	86488	0	0	0
	380C2F1	22294	99752	179353	0	0	0
	380C2F2	22294	97105	176421	0	0	0
	380C2F3	22293	93874	172976	0	0	0
	RTG	0	0	0	0	0	0
NL3/4	GW / opgw	3206	11551	22566	0	0	0
Construction/maintenance, +5°C	380C1F1	10797	38497	76368	0	0	0
Permanent loads yg= 1.2	380C1F2	10797	38183	76186	0	0	0
Wind angle: -45°	380C1F3	10797	37799	75986	0	0	0
	380C2F1	21594	76993	152736	0	0	0
	380C2F2	21593	76365	152373	0	0	0
	380C2F3	21593	75598	151972	0	0	0
	RTG	0	0	0	0	0	0
NL3/1a	GW / opgw	1953	7510	14656	0	0	0
Wind, 10°C	380C1F1	7193	26783	53370	0	0	0
Permanent loads yg= 0.9	380C1F2	7193	26570	53236	0	0	0
Wind angle: 0°	380C1F3	7193	26310	53089	0	0	0
	380C2F1	14387	53566	106740	0	0	0
	380C2F2	14386	53141	106473	0	0	0
	380C2F3	14386	52621	106177	0	0	0
	RTG	0	0	0	0	0	0
NL3/1b	GW / opgw	1952	7684	16032	0	0	0
Wind, -20°C	380C1F1	7189	28574	60027	0	0	0
Permanent loads yg= 0.9	380C1F2	7189	28527	60025	0	0	0
Wind angle: 0°	380C1F3	7189	28468	60025	0	0	0
	380C2F1	14378	57149	120055	0	0	0
	380C2F2	14378	57054	120051	0	0	0
	380C2F3	14378	56936	120050	0	0	0
	RTG	0	0	0	0	0	0

NL3/3	GW / opgw	3719	13241	26105	0	0	0
Wind, -5°C	380C1F1	8745	32493	66188	0	0	0
Permanent loads yg= 0.9	380C1F2	8745	32333	66121	0	0	0
Wind angle: 0°	380C1F3	8745	32136	66050	0	0	0
	380C2F1	17490	64986	132375	0	0	0
	380C2F2	17490	64666	132242	0	0	0
	380C2F3	17490	64272	132101	0	0	0
	RTG	0	0	0	0	0	0
NL3/4	GW / opgw	2554	8745	18308	0	0	0
Construction/maintenance, +5°C	380C1F1	8396	29164	61291	0	0	0
Permanent loads yg= 0.9	380C1F2	8396	29119	61294	0	0	0
Wind angle: 0°	380C1F3	8396	29062	61298	0	0	0
	380C2F1	16793	58328	122583	0	0	0
	380C2F2	16793	58238	122587	0	0	0
	380C2F3	16793	58124	122596	0	0	0
	RTG	0	0	0	0	0	0
NL3/1a	GW / opgw	1953	7161	14408	0	0	0
Wind, 10°C	380C1F1	7193	25909	52899	0	0	0
Permanent loads yg= 0.9	380C1F2	7193	25789	52854	0	0	0
Wind angle: 45°	380C1F3	7193	25642	52805	0	0	0
	380C2F1	14386	51819	105799	0	0	0
	380C2F2	14386	51579	105707	0	0	0
	380C2F3	14386	51284	105610	0	0	0
	RTG	0	0	0	0	0	0
NL3/1b	GW / opgw	1952	7608	16024	0	0	0
Wind, -20°C	380C1F1	7189	28374	60030	0	0	0
Permanent loads yg= 0.9	380C1F2	7189	28346	60033	0	0	0
Wind angle: 45°	380C1F3	7189	28309	60038	0	0	0
	380C2F1	14378	56749	120060	0	0	0
	380C2F2	14378	56691	120066	0	0	0
	380C2F3	14378	56619	120076	0	0	0
	RTG	0	0	0	0	0	0
NL3/3	GW / opgw	3719	12755	25855	0	0	0
Wind, -5°C	380C1F1	8745	31828	65967	0	0	0
Permanent loads yg= 0.9	380C1F2	8745	31735	65949	0	0	0
Wind angle: 45°	380C1F3	8745	31620	65933	0	0	0
	380C2F1	17490	63656	131934	0	0	0
	380C2F2	17490	63470	131899	0	0	0
	380C2F3	17490	63240	131865	0	0	0
	RTG	0	0	0	0	0	0
NL3/4	GW / opgw	2554	8675	18311	0	0	0
Construction/maintenance, +5°C	380C1F1	8396	28972	61310	0	0	0
Permanent loads yg= 0.9	380C1F2	8396	28944	61315	0	0	0
Wind angle: 45°	380C1F3	8396	28908	61322	0	0	0
	380C2F1	16793	57943	122620	0	0	0
	380C2F2	16793	57887	122630	0	0	0
	380C2F3	16793	57817	122644	0	0	0
	RTG	0	0	0	0	0	0
NL3/1a	GW / opgw	1953	13342	21945	0	0	0
Wind, 10°C	380C1F1	7195	41579	70459	0	0	0
Permanent loads yg= 0.9	380C1F2	7195	39785	68097	0	0	0
Wind angle: 90°	380C1F3	7195	37566	65223	0	0	0
	380C2F1	14391	83159	140917	0	0	0
	380C2F2	14390	79571	136195	0	0	0
	380C2F3	14390	75132	130445	0	0	0
	RTG	0	0	0	0	0	0
NL3/1b	GW / opgw	1952	8846	16921	0	0	0
Wind, -20°C	380C1F1	7189	31482	61763	0	0	0
Permanent loads yg= 0.9	380C1F2	7189	31123	61449	0	0	0
Wind angle: 90°	380C1F3	7189	30687	61093	0	0	0
	380C2F1	14379	62965	123525	0	0	0
	380C2F2	14378	62246	122898	0	0	0
	380C2F3	14378	61374	122186	0	0	0
	RTG	0	0	0	0	0	0
NL3/3	GW / opgw	3721	21176	34877	0	0	0
Wind, -5°C	380C1F1	8747	43469	77146	0	0	0
Permanent loads yg= 0.9	380C1F2	8747	42102	75490	0	0	0
Wind angle: 90°	380C1F3	8746	40429	73522	0	0	0
	380C2F1	17494	86937	154291	0	0	0
	380C2F2	17493	84203	150981	0	0	0
	380C2F3	17493	80858	147044	0	0	0
	RTG	0	0	0	0	0	0

NL3/4	GW / opgw	2554	9743	18844	0	0	0
Construction/maintenance, +5°C	380C1F1	8397	31826	62496	0	0	0
Permanent loads yg= 0.9	380C1F2	8397	31504	62262	0	0	0
Wind angle: 90°	380C1F3	8397	31111	62000	0	0	0
	380C2F1	16793	63651	124991	0	0	0
	380C2F2	16793	63008	124524	0	0	0
	380C2F3	16793	62223	124001	0	0	0
	RTG	0	0	0	0	0	0
NL3/1a	GW / opgw	1954	13991	22837	0	0	0
Wind, 10°C	380C1F1	7196	43304	72752	0	0	0
Permanent loads yg= 0.9	380C1F2	7195	41344	70148	0	0	0
Wind angle: -45°	380C1F3	7195	38913	66961	0	0	0
	380C2F1	14392	86607	145504	0	0	0
	380C2F2	14391	82689	140296	0	0	0
	380C2F3	14390	77827	133922	0	0	0
	RTG	0	0	0	0	0	0
NL3/1b	GW / opgw	1952	8989	17075	0	0	0
Wind, -20°C	380C1F1	7189	31834	62085	0	0	0
Permanent loads yg= 0.9	380C1F2	7189	31435	61720	0	0	0
Wind angle: -45°	380C1F3	7189	30951	61305	0	0	0
	380C2F1	14379	63668	124170	0	0	0
	380C2F2	14379	62870	123440	0	0	0
	380C2F3	14378	61901	122609	0	0	0
	RTG	0	0	0	0	0	0
NL3/3	GW / opgw	3721	22075	36015	0	0	0
Wind, -5°C	380C1F1	8747	44795	78783	0	0	0
Permanent loads yg= 0.9	380C1F2	8747	43289	76926	0	0	0
Wind angle: -45°	380C1F3	8747	41442	74706	0	0	0
	380C2F1	17494	89590	157566	0	0	0
	380C2F2	17494	86578	153852	0	0	0
	380C2F3	17493	82884	149412	0	0	0
	RTG	0	0	0	0	0	0
NL3/4	GW / opgw	2554	9863	18946	0	0	0
Construction/maintenance, +5°C	380C1F1	8397	32140	62738	0	0	0
Permanent loads yg= 0.9	380C1F2	8397	31783	62464	0	0	0
Wind angle: -45°	380C1F3	8397	31349	62156	0	0	0
	380C2F1	16793	64280	125476	0	0	0
	380C2F2	16793	63566	124928	0	0	0
	380C2F3	16793	62698	124311	0	0	0
	RTG	0	0	0	0	0	0

ZWW4HL450

Loadcases for tower strength (Special limit state)

		Ahead			Back		
Loadcase according to 50341-3-15	Att. Point	Vertical [N]	Transversal [N]	Longitudinal [N]	Vertical [N]	Transversal [N]	Longitudinal [N]
NL3/1a	GW / opgw	2604	9311	18517	2604	9311	-18517
Wind, 10°C	380C1F1	9593	33418	67599	9593	33418	-67599
Permanent loads yg= 1.2	380C1F2	9593	33231	67520	9593	33231	-67520
Wind angle: 0°	380C1F3	9593	33001	67437	9593	33001	-67437
	380C2F1	0	0	0	0	0	0
	380C2F2	0	0	0	0	0	0
	380C2F3	0	0	0	0	0	0
	RTG	0	0	0	0	0	0
NL3/1b	GW / opgw	2603	9665	20282	2603	9665	-20282
Wind, -20°C	380C1F1	9588	35764	75445	9588	35764	-75445
Permanent loads yg= 1.2	380C1F2	9588	35720	75449	9588	35720	-75449
Wind angle: 0°	380C1F3	9588	35664	75456	9588	35664	-75456
	380C2F1	0	0	0	0	0	0
	380C2F2	0	0	0	0	0	0
	380C2F3	0	0	0	0	0	0
	RTG	0	0	0	0	0	0
NL3/3	GW / opgw	4371	14849	29555	4371	14849	-29555
Wind, -5°C	380C1F1	11145	39104	80365	11145	39104	-80365
Permanent loads yg= 1.2	380C1F2	11145	38958	80328	11145	38958	-80328
Wind angle: 0°	380C1F3	11145	38777	80292	11145	38777	-80292
	380C2F1	0	0	0	0	0	0
	380C2F2	0	0	0	0	0	0
	380C2F3	0	0	0	0	0	0
	RTG	0	0	0	0	0	0
NL3/4	GW / opgw	3206	10537	22151	3206	10537	-22151
Construction/maintenance, +5°C	380C1F1	10797	35804	75530	10797	35804	-75530
Permanent loads yg= 1.2	380C1F2	10797	35761	75537	10797	35761	-75537
Wind angle: 0°	380C1F3	10796	35706	75546	10796	35706	-75546
	380C2F1	0	0	0	0	0	0
	380C2F2	0	0	0	0	0	0
	380C2F3	0	0	0	0	0	0
	RTG	0	0	0	0	0	0
NL3/1a	GW / opgw	2604	9007	18365	2605	14990	-24978
Wind, 10°C	380C1F1	9593	32643	67338	9596	47673	-82119
Permanent loads yg= 1.2	380C1F2	9593	32534	67317	9595	45940	-80001
Wind angle: 45°	380C1F3	9593	32400	67297	9595	43811	-77461
	380C2F1	0	0	0	0	0	0
	380C2F2	0	0	0	0	0	0
	380C2F3	0	0	0	0	0	0
	RTG	0	0	0	0	0	0
NL3/1b	GW / opgw	2603	9595	20284	2603	10791	-20938
Wind, -20°C	380C1F1	9588	35575	75471	9588	38618	-76632
Permanent loads yg= 1.2	380C1F2	9588	35547	75477	9588	38279	-76397
Wind angle: 45°	380C1F3	9588	35512	75485	9588	37866	-76134
	380C2F1	0	0	0	0	0	0
	380C2F2	0	0	0	0	0	0
	380C2F3	0	0	0	0	0	0
	RTG	0	0	0	0	0	0
NL3/3	GW / opgw	4371	14397	29375	4373	23024	-38048
Wind, -5°C	380C1F1	11145	38492	80258	11147	49876	-89677
Permanent loads yg= 1.2	380C1F2	11145	38405	80253	11147	48552	-88211
Wind angle: 45°	380C1F3	11145	38297	80252	11146	46937	-86488
	380C2F1	0	0	0	0	0	0
	380C2F2	0	0	0	0	0	0
	380C2F3	0	0	0	0	0	0
	RTG	0	0	0	0	0	0
NL3/4	GW / opgw	3206	10470	22161	3206	11551	-22566
Construction/maintenance, +5°C	380C1F1	10796	35619	75565	10797	38497	-76368
Permanent loads yg= 1.2	380C1F2	10796	35592	75572	10797	38183	-76186
Wind angle: 45°	380C1F3	10796	35557	75581	10797	37799	-75986
	380C2F1	0	0	0	0	0	0
	380C2F2	0	0	0	0	0	0
	380C2F3	0	0	0	0	0	0
	RTG	0	0	0	0	0	0
NL3/1a	GW / opgw	2605	14398	24209	2605	14398	-24209
Wind, 10°C	380C1F1	9595	46147	80252	9595	46147	-80252
Permanent loads yg= 1.2	380C1F2	9595	44572	78360	9595	44572	-78360
Wind angle: 90°	380C1F3	9595	42641	76103	9595	42641	-76103
	380C2F1	0	0	0	0	0	0
	380C2F2	0	0	0	0	0	0
	380C2F3	0	0	0	0	0	0
	RTG	0	0	0	0	0	0

NL3/1b	GW / opgw	2603	10671	20833	2603	10671	-20833
Wind, -20°C	380C1F1	9588	38320	76424	9588	38320	-76424
Permanent loads yg= 1.2	380C1F2	9588	38014	76225	9588	38014	-76225
Wind angle: 90°	380C1F3	9588	37640	76003	9588	37640	-76003
	380C2F1	0	0	0	0	0	0
	380C2F2	0	0	0	0	0	0
	380C2F3	0	0	0	0	0	0
	RTG	0	0	0	0	0	0
NL3/3	GW / opgw	4373	22176	37021	4373	22176	-37021
Wind, -5°C	380C1F1	11147	48710	88383	11147	48710	-88383
Permanent loads yg= 1.2	380C1F2	11147	47513	87093	11147	47513	-87093
Wind angle: 90°	380C1F3	11146	46054	85584	11146	46054	-85584
	380C2F1	0	0	0	0	0	0
	380C2F2	0	0	0	0	0	0
	380C2F3	0	0	0	0	0	0
	RTG	0	0	0	0	0	0
NL3/4	GW / opgw	3206	11445	22493	3206	11445	-22493
Construction/maintenance, +5°C	380C1F1	10797	38220	76207	10797	38220	-76207
Permanent loads yg= 1.2	380C1F2	10797	37936	76055	10797	37936	-76055
Wind angle: 90°	380C1F3	10797	37588	75888	10797	37588	-75888
	380C2F1	0	0	0	0	0	0
	380C2F2	0	0	0	0	0	0
	380C2F3	0	0	0	0	0	0
	RTG	0	0	0	0	0	0
NL3/1a	GW / opgw	2605	14990	24978	2604	9007	-18365
Wind, 10°C	380C1F1	9596	47673	82119	9593	32643	-67338
Permanent loads yg= 1.2	380C1F2	9595	45940	80001	9593	32534	-67317
Wind angle: -45°	380C1F3	9595	43811	77461	9593	32400	-67297
	380C2F1	0	0	0	0	0	0
	380C2F2	0	0	0	0	0	0
	380C2F3	0	0	0	0	0	0
	RTG	0	0	0	0	0	0
NL3/1b	GW / opgw	2603	10791	20938	2603	9595	-20284
Wind, -20°C	380C1F1	9588	38618	76632	9588	35575	-75471
Permanent loads yg= 1.2	380C1F2	9588	38279	76397	9588	35547	-75477
Wind angle: -45°	380C1F3	9588	37866	76134	9588	35512	-75485
	380C2F1	0	0	0	0	0	0
	380C2F2	0	0	0	0	0	0
	380C2F3	0	0	0	0	0	0
	RTG	0	0	0	0	0	0
NL3/3	GW / opgw	4373	23024	38048	4371	14397	-29375
Wind, -5°C	380C1F1	11147	49876	89677	11145	38492	-80258
Permanent loads yg= 1.2	380C1F2	11147	48552	88211	11145	38405	-80253
Wind angle: -45°	380C1F3	11146	46937	86488	11145	38297	-80252
	380C2F1	0	0	0	0	0	0
	380C2F2	0	0	0	0	0	0
	380C2F3	0	0	0	0	0	0
	RTG	0	0	0	0	0	0
NL3/4	GW / opgw	3206	11551	22566	3206	10470	-22161
Construction/maintenance, +5°C	380C1F1	10797	38497	76368	10796	35619	-75565
Permanent loads yg= 1.2	380C1F2	10797	38183	76186	10796	35592	-75572
Wind angle: -45°	380C1F3	10797	37799	75986	10796	35557	-75581
	380C2F1	0	0	0	0	0	0
	380C2F2	0	0	0	0	0	0
	380C2F3	0	0	0	0	0	0
	RTG	0	0	0	0	0	0
NL3/1a	GW / opgw	1953	7510	14656	1953	7510	-14656
Wind, 10°C	380C1F1	7193	26783	53370	7193	26783	-53370
Permanent loads yg= 0.9	380C1F2	7193	26570	53236	7193	26570	-53236
Wind angle: 0°	380C1F3	7193	26310	53089	7193	26310	-53089
	380C2F1	0	0	0	0	0	0
	380C2F2	0	0	0	0	0	0
	380C2F3	0	0	0	0	0	0
	RTG	0	0	0	0	0	0
NL3/1b	GW / opgw	1952	7684	16032	1952	7684	-16032
Wind, -20°C	380C1F1	7189	28574	60027	7189	28574	-60027
Permanent loads yg= 0.9	380C1F2	7189	28527	60025	7189	28527	-60025
Wind angle: 0°	380C1F3	7189	28468	60025	7189	28468	-60025
	380C2F1	0	0	0	0	0	0
	380C2F2	0	0	0	0	0	0
	380C2F3	0	0	0	0	0	0
	RTG	0	0	0	0	0	0

NL3/3	GW / opgw	3719	13241	26105	3719	13241	-26105
Wind, -5°C	380C1F1	8745	32493	66188	8745	32493	-66188
Permanent loads yg= 0.9	380C1F2	8745	32333	66121	8745	32333	-66121
Wind angle: 0°	380C1F3	8745	32136	66050	8745	32136	-66050
	380C2F1	0	0	0	0	0	0
	380C2F2	0	0	0	0	0	0
	380C2F3	0	0	0	0	0	0
	RTG	0	0	0	0	0	0
NL3/4	GW / opgw	2554	8745	18308	2554	8745	-18308
Construction/maintenance, +5°C	380C1F1	8396	29164	61291	8396	29164	-61291
Permanent loads yg= 0.9	380C1F2	8396	29119	61294	8396	29119	-61294
Wind angle: 0°	380C1F3	8396	29062	61298	8396	29062	-61298
	380C2F1	0	0	0	0	0	0
	380C2F2	0	0	0	0	0	0
	380C2F3	0	0	0	0	0	0
	RTG	0	0	0	0	0	0
NL3/1a	GW / opgw	1953	7161	14408	1954	13991	-22837
Wind, 10°C	380C1F1	7193	25909	52899	7196	43304	-72752
Permanent loads yg= 0.9	380C1F2	7193	25789	52854	7195	41344	-70148
Wind angle: 45°	380C1F3	7193	25642	52805	7195	38913	-66961
	380C2F1	0	0	0	0	0	0
	380C2F2	0	0	0	0	0	0
	380C2F3	0	0	0	0	0	0
	RTG	0	0	0	0	0	0
NL3/1b	GW / opgw	1952	7608	16024	1952	8989	-17075
Wind, -20°C	380C1F1	7189	28374	60030	7189	31834	-62085
Permanent loads yg= 0.9	380C1F2	7189	28346	60033	7189	31435	-61720
Wind angle: 45°	380C1F3	7189	28309	60038	7189	30951	-61305
	380C2F1	0	0	0	0	0	0
	380C2F2	0	0	0	0	0	0
	380C2F3	0	0	0	0	0	0
	RTG	0	0	0	0	0	0
NL3/3	GW / opgw	3719	12755	25855	3721	22075	-36015
Wind, -5°C	380C1F1	8745	31828	65967	8747	44795	-78783
Permanent loads yg= 0.9	380C1F2	8745	31735	65949	8747	43289	-76926
Wind angle: 45°	380C1F3	8745	31620	65933	8747	41442	-74706
	380C2F1	0	0	0	0	0	0
	380C2F2	0	0	0	0	0	0
	380C2F3	0	0	0	0	0	0
	RTG	0	0	0	0	0	0
NL3/4	GW / opgw	2554	8675	18311	2554	9863	-18946
Construction/maintenance, +5°C	380C1F1	8396	28972	61310	8397	32140	-62738
Permanent loads yg= 0.9	380C1F2	8396	28944	61315	8397	31783	-62464
Wind angle: 45°	380C1F3	8396	28908	61322	8397	31349	-62156
	380C2F1	0	0	0	0	0	0
	380C2F2	0	0	0	0	0	0
	380C2F3	0	0	0	0	0	0
	RTG	0	0	0	0	0	0
NL3/1a	GW / opgw	1953	13342	21945	1953	13342	-21945
Wind, 10°C	380C1F1	7195	41579	70459	7195	41579	-70459
Permanent loads yg= 0.9	380C1F2	7195	39785	68097	7195	39785	-68097
Wind angle: 90°	380C1F3	7195	37566	65223	7195	37566	-65223
	380C2F1	0	0	0	0	0	0
	380C2F2	0	0	0	0	0	0
	380C2F3	0	0	0	0	0	0
	RTG	0	0	0	0	0	0
NL3/1b	GW / opgw	1952	8846	16921	1952	8846	-16921
Wind, -20°C	380C1F1	7189	31482	61763	7189	31482	-61763
Permanent loads yg= 0.9	380C1F2	7189	31123	61449	7189	31123	-61449
Wind angle: 90°	380C1F3	7189	30687	61093	7189	30687	-61093
	380C2F1	0	0	0	0	0	0
	380C2F2	0	0	0	0	0	0
	380C2F3	0	0	0	0	0	0
	RTG	0	0	0	0	0	0
NL3/3	GW / opgw	3721	21176	34877	3721	21176	-34877
Wind, -5°C	380C1F1	8747	43469	77146	8747	43469	-77146
Permanent loads yg= 0.9	380C1F2	8747	42102	75490	8747	42102	-75490
Wind angle: 90°	380C1F3	8746	40429	73522	8746	40429	-73522
	380C2F1	0	0	0	0	0	0
	380C2F2	0	0	0	0	0	0
	380C2F3	0	0	0	0	0	0
	RTG	0	0	0	0	0	0

NL3/4	GW / opgw	2554	9743	18844	2554	9743	-18844
Construction/maintenance, +5°C	380C1F1	8397	31826	62496	8397	31826	-62496
Permanent loads yg= 0.9	380C1F2	8397	31504	62262	8397	31504	-62262
Wind angle: 90°	380C1F3	8397	31111	62000	8397	31111	-62000
	380C2F1	0	0	0	0	0	0
	380C2F2	0	0	0	0	0	0
	380C2F3	0	0	0	0	0	0
	RTG	0	0	0	0	0	0
NL3/1a	GW / opgw	1954	13991	22837	1953	7161	-14408
Wind, 10°C	380C1F1	7196	43304	72752	7193	25909	-52899
Permanent loads yg= 0.9	380C1F2	7195	41344	70148	7193	25789	-52854
Wind angle: -45°	380C1F3	7195	38913	66961	7193	25642	-52805
	380C2F1	0	0	0	0	0	0
	380C2F2	0	0	0	0	0	0
	380C2F3	0	0	0	0	0	0
	RTG	0	0	0	0	0	0
NL3/1b	GW / opgw	1952	8989	17075	1952	7608	-16024
Wind, -20°C	380C1F1	7189	31834	62085	7189	28374	-60030
Permanent loads yg= 0.9	380C1F2	7189	31435	61720	7189	28346	-60033
Wind angle: -45°	380C1F3	7189	30951	61305	7189	28309	-60038
	380C2F1	0	0	0	0	0	0
	380C2F2	0	0	0	0	0	0
	380C2F3	0	0	0	0	0	0
	RTG	0	0	0	0	0	0
NL3/3	GW / opgw	3721	22075	36015	3719	12755	-25855
Wind, -5°C	380C1F1	8747	44795	78783	8745	31828	-65967
Permanent loads yg= 0.9	380C1F2	8747	43289	76926	8745	31735	-65949
Wind angle: -45°	380C1F3	8747	41442	74706	8745	31620	-65933
	380C2F1	0	0	0	0	0	0
	380C2F2	0	0	0	0	0	0
	380C2F3	0	0	0	0	0	0
	RTG	0	0	0	0	0	0
NL3/4	GW / opgw	2554	9863	18946	2554	8675	-18311
Construction/maintenance, +5°C	380C1F1	8397	32140	62738	8396	28972	-61310
Permanent loads yg= 0.9	380C1F2	8397	31783	62464	8396	28944	-61315
Wind angle: -45°	380C1F3	8397	31349	62156	8396	28908	-61322
	380C2F1	0	0	0	0	0	0
	380C2F2	0	0	0	0	0	0
	380C2F3	0	0	0	0	0	0
	RTG	0	0	0	0	0	0

ZWW4HL450

Loadcases for tower strength (Special limit state)

		Ahead			Back		
Loadcase according to 50341-3-15	Att. Point	Vertical [N]	Transversal [N]	Longitudinal [N]	Vertical [N]	Transversal [N]	Longitudinal [N]
NL3/1a	GW / opgw	0	0	0	0	0	0
Wind, 10°C	380C1F1	0	0	0	0	0	0
Permanent loads yg= 1.2	380C1F2	0	0	0	0	0	0
Wind angle: 0°	380C1F3	0	0	0	0	0	0
	380C2F1	19186	66837	135197	19186	66837	-135197
	380C2F2	19186	66463	135041	19186	66463	-135041
	380C2F3	19186	66003	134874	19186	66003	-134874
	RTG	0	0	0	5200	17971	-36681
NL3/1b	GW / opgw	0	0	0	0	0	0
Wind, -20°C	380C1F1	0	0	0	0	0	0
Permanent loads yg= 1.2	380C1F2	0	0	0	0	0	0
Wind angle: 0°	380C1F3	0	0	0	0	0	0
	380C2F1	19175	71528	150891	19175	71528	-150891
	380C2F2	19175	71439	150899	19175	71439	-150899
	380C2F3	19175	71328	150912	19175	71328	-150912
	RTG	0	0	0	5198	19034	-40248
NL3/3	GW / opgw	0	0	0	0	0	0
Wind, -5°C	380C1F1	0	0	0	0	0	0
Permanent loads yg= 1.2	380C1F2	0	0	0	0	0	0
Wind angle: 0°	380C1F3	0	0	0	0	0	0
	380C2F1	22290	78209	160729	22290	78209	-160729
	380C2F2	22290	77916	160657	22290	77916	-160657
	380C2F3	22290	77554	160585	22290	77554	-160585
	RTG	0	0	0	8742	28711	-58644
NL3/4	GW / opgw	0	0	0	0	0	0
Construction/maintenance, +5°C	380C1F1	0	0	0	0	0	0
Permanent loads yg= 1.2	380C1F2	0	0	0	0	0	0
Wind angle: 0°	380C1F3	0	0	0	0	0	0
	380C2F1	21593	71608	151061	21593	71608	-151061
	380C2F2	21593	71521	151073	21593	71521	-151073
	380C2F3	21593	71413	151092	21593	71413	-151092
	RTG	0	0	0	6404	20903	-44254
NL3/1a	GW / opgw	0	0	0	0	0	0
Wind, 10°C	380C1F1	0	0	0	0	0	0
Permanent loads yg= 1.2	380C1F2	0	0	0	0	0	0
Wind angle: 45°	380C1F3	0	0	0	0	0	0
	380C2F1	19186	65285	134676	19192	95346	-164238
	380C2F2	19186	65068	134634	19191	91880	-160002
	380C2F3	19186	64800	134594	19190	87622	-154922
	RTG	0	0	0	5201	24138	-42576
NL3/1b	GW / opgw	0	0	0	0	0	0
Wind, -20°C	380C1F1	0	0	0	0	0	0
Permanent loads yg= 1.2	380C1F2	0	0	0	0	0	0
Wind angle: 45°	380C1F3	0	0	0	0	0	0
	380C2F1	19175	71149	150942	19176	77236	-153263
	380C2F2	19175	71094	150953	19176	76559	-152793
	380C2F3	19175	71025	150969	19176	75733	-152269
	RTG	0	0	0	5198	20279	-40663
NL3/3	GW / opgw	0	0	0	0	0	0
Wind, -5°C	380C1F1	0	0	0	0	0	0
Permanent loads yg= 1.2	380C1F2	0	0	0	0	0	0
Wind angle: 45°	380C1F3	0	0	0	0	0	0
	380C2F1	22290	76984	160516	22294	99752	-179353
	380C2F2	22290	76811	160506	22294	97105	-176421
	380C2F3	22290	76594	160504	22293	93874	-172976
	RTG	0	0	0	8745	37611	-66184
NL3/4	GW / opgw	0	0	0	0	0	0
Construction/maintenance, +5°C	380C1F1	0	0	0	0	0	0
Permanent loads yg= 1.2	380C1F2	0	0	0	0	0	0
Wind angle: 45°	380C1F3	0	0	0	0	0	0
	380C2F1	21593	71237	151130	21594	76993	-152736
	380C2F2	21593	71183	151143	21593	76365	-152373
	380C2F3	21593	71115	151161	21593	75598	-151972
	RTG	0	0	0	6404	22051	-44461
NL3/1a	GW / opgw	0	0	0	0	0	0
Wind, 10°C	380C1F1	0	0	0	0	0	0
Permanent loads yg= 1.2	380C1F2	0	0	0	0	0	0
Wind angle: 90°	380C1F3	0	0	0	0	0	0
	380C2F1	19191	92294	160503	19191	92294	-160503
	380C2F2	19190	89144	156719	19190	89144	-156719
	380C2F3	19189	85281	152205	19189	85281	-152205
	RTG	0	0	0	5201	23469	-41783

NL3/1b	GW / opgw	0	0	0	0	0	0
Wind, -20°C	380C1F1	0	0	0	0	0	0
Permanent loads yg= 1.2	380C1F2	0	0	0	0	0	0
Wind angle: 90°	380C1F3	0	0	0	0	0	0
	380C2F1	19176	76639	152848	19176	76639	-152848
	380C2F2	19176	76027	152449	19176	76027	-152449
	380C2F3	19176	75281	152007	19176	75281	-152007
	RTG	0	0	0	5198	20150	-40585
NL3/3	GW / opgw	0	0	0	0	0	0
Wind, -5°C	380C1F1	0	0	0	0	0	0
Permanent loads yg= 1.2	380C1F2	0	0	0	0	0	0
Wind angle: 90°	380C1F3	0	0	0	0	0	0
	380C2F1	22294	97420	176766	22294	97420	-176766
	380C2F2	22293	95026	174186	22293	95026	-174186
	380C2F3	22292	92109	171168	22292	92109	-171168
	RTG	0	0	0	8744	36656	-65146
NL3/4	GW / opgw	0	0	0	0	0	0
Construction/maintenance, +5°C	380C1F1	0	0	0	0	0	0
Permanent loads yg= 1.2	380C1F2	0	0	0	0	0	0
Wind angle: 90°	380C1F3	0	0	0	0	0	0
	380C2F1	21594	76440	152414	21594	76440	-152414
	380C2F2	21593	75872	152109	21593	75872	-152109
	380C2F3	21593	75175	151775	21593	75175	-151775
	RTG	0	0	0	6404	21936	-44412
NL3/1a	GW / opgw	0	0	0	0	0	0
Wind, 10°C	380C1F1	0	0	0	0	0	0
Permanent loads yg= 1.2	380C1F2	0	0	0	0	0	0
Wind angle: -45°	380C1F3	0	0	0	0	0	0
	380C2F1	19192	95346	164238	19186	65285	-134676
	380C2F2	19191	91880	160002	19186	65068	-134634
	380C2F3	19190	87622	154922	19186	64800	-134594
	RTG	0	0	0	5200	17631	-36594
NL3/1b	GW / opgw	0	0	0	0	0	0
Wind, -20°C	380C1F1	0	0	0	0	0	0
Permanent loads yg= 1.2	380C1F2	0	0	0	0	0	0
Wind angle: -45°	380C1F3	0	0	0	0	0	0
	380C2F1	19176	77236	153263	19175	71149	-150942
	380C2F2	19176	76559	152793	19175	71094	-150953
	380C2F3	19176	75733	152269	19175	71025	-150969
	RTG	0	0	0	5198	18949	-40263
NL3/3	GW / opgw	0	0	0	0	0	0
Wind, -5°C	380C1F1	0	0	0	0	0	0
Permanent loads yg= 1.2	380C1F2	0	0	0	0	0	0
Wind angle: -45°	380C1F3	0	0	0	0	0	0
	380C2F1	22294	99752	179353	22290	76984	-160516
	380C2F2	22294	97105	176421	22290	76811	-160506
	380C2F3	22293	93874	172976	22290	76594	-160504
	RTG	0	0	0	8742	28200	-58558
NL3/4	GW / opgw	0	0	0	0	0	0
Construction/maintenance, +5°C	380C1F1	0	0	0	0	0	0
Permanent loads yg= 1.2	380C1F2	0	0	0	0	0	0
Wind angle: -45°	380C1F3	0	0	0	0	0	0
	380C2F1	21594	76993	152736	21593	71237	-151130
	380C2F2	21593	76365	152373	21593	71183	-151143
	380C2F3	21593	75598	151972	21593	71115	-151161
	RTG	0	0	0	6404	20820	-44274
NL3/1a	GW / opgw	0	0	0	0	0	0
Wind, 10°C	380C1F1	0	0	0	0	0	0
Permanent loads yg= 0.9	380C1F2	0	0	0	0	0	0
Wind angle: 0°	380C1F3	0	0	0	0	0	0
	380C2F1	14387	53566	106740	14387	53566	-106740
	380C2F2	14386	53141	106473	14386	53141	-106473
	380C2F3	14386	52621	106177	14386	52621	-106177
	RTG	0	0	0	3900	14276	-28757
NL3/1b	GW / opgw	0	0	0	0	0	0
Wind, -20°C	380C1F1	0	0	0	0	0	0
Permanent loads yg= 0.9	380C1F2	0	0	0	0	0	0
Wind angle: 0°	380C1F3	0	0	0	0	0	0
	380C2F1	14378	57149	120055	14378	57149	-120055
	380C2F2	14378	57054	120051	14378	57054	-120051
	380C2F3	14378	56936	120050	14378	56936	-120050
	RTG	0	0	0	3898	15071	-31748

NL3/3	GW / opgw	0	0	0	0	0	0
Wind, -5°C	380C1F1	0	0	0	0	0	0
Permanent loads yg= 0.9	380C1F2	0	0	0	0	0	0
Wind angle: 0°	380C1F3	0	0	0	0	0	0
	380C2F1	17490	64986	132375	17490	64986	-132375
	380C2F2	17490	64666	132242	17490	64666	-132242
	380C2F3	17490	64272	132101	17490	64272	-132101
	RTG	0	0	0	7441	25426	-51599
NL3/4	GW / opgw	0	0	0	0	0	0
Construction/maintenance, +5°C	380C1F1	0	0	0	0	0	0
Permanent loads yg= 0.9	380C1F2	0	0	0	0	0	0
Wind angle: 0°	380C1F3	0	0	0	0	0	0
	380C2F1	16793	58328	122583	16793	58328	-122583
	380C2F2	16793	58238	122587	16793	58238	-122587
	380C2F3	16793	58124	122596	16793	58124	-122596
	RTG	0	0	0	5103	17311	-36553
NL3/1a	GW / opgw	0	0	0	0	0	0
Wind, 10°C	380C1F1	0	0	0	0	0	0
Permanent loads yg= 0.9	380C1F2	0	0	0	0	0	0
Wind angle: 45°	380C1F3	0	0	0	0	0	0
	380C2F1	14386	51819	105799	14392	86607	-145504
	380C2F2	14386	51579	105707	14391	82689	-140296
	380C2F3	14386	51284	105610	14390	77827	-133922
	RTG	0	0	0	3900	21457	-36828
NL3/1b	GW / opgw	0	0	0	0	0	0
Wind, -20°C	380C1F1	0	0	0	0	0	0
Permanent loads yg= 0.9	380C1F2	0	0	0	0	0	0
Wind angle: 45°	380C1F3	0	0	0	0	0	0
	380C2F1	14378	56749	120060	14379	63668	-124170
	380C2F2	14378	56691	120066	14379	62870	-123440
	380C2F3	14378	56619	120076	14378	61901	-122609
	RTG	0	0	0	3898	16474	-32504
NL3/3	GW / opgw	0	0	0	0	0	0
Wind, -5°C	380C1F1	0	0	0	0	0	0
Permanent loads yg= 0.9	380C1F2	0	0	0	0	0	0
Wind angle: 45°	380C1F3	0	0	0	0	0	0
	380C2F1	17490	63656	131934	17494	89590	-157566
	380C2F2	17490	63470	131899	17494	86578	-153852
	380C2F3	17490	63240	131865	17493	82884	-149412
	RTG	0	0	0	7443	35116	-60836
NL3/4	GW / opgw	0	0	0	0	0	0
Construction/maintenance, +5°C	380C1F1	0	0	0	0	0	0
Permanent loads yg= 0.9	380C1F2	0	0	0	0	0	0
Wind angle: 45°	380C1F3	0	0	0	0	0	0
	380C2F1	16793	57943	122620	16793	64280	-125476
	380C2F2	16793	57887	122630	16793	63566	-124928
	380C2F3	16793	57817	122644	16793	62698	-124311
	RTG	0	0	0	5103	18550	-36954
NL3/1a	GW / opgw	0	0	0	0	0	0
Wind, 10°C	380C1F1	0	0	0	0	0	0
Permanent loads yg= 0.9	380C1F2	0	0	0	0	0	0
Wind angle: 90°	380C1F3	0	0	0	0	0	0
	380C2F1	14391	83159	140917	14391	83159	-140917
	380C2F2	14390	79571	136195	14390	79571	-136195
	380C2F3	14390	75132	130445	14390	75132	-130445
	RTG	0	0	0	3900	20689	-35823
NL3/1b	GW / opgw	0	0	0	0	0	0
Wind, -20°C	380C1F1	0	0	0	0	0	0
Permanent loads yg= 0.9	380C1F2	0	0	0	0	0	0
Wind angle: 90°	380C1F3	0	0	0	0	0	0
	380C2F1	14379	62965	123525	14379	62965	-123525
	380C2F2	14378	62246	122898	14378	62246	-122898
	380C2F3	14378	61374	122186	14378	61374	-122186
	RTG	0	0	0	3898	16324	-32380
NL3/3	GW / opgw	0	0	0	0	0	0
Wind, -5°C	380C1F1	0	0	0	0	0	0
Permanent loads yg= 0.9	380C1F2	0	0	0	0	0	0
Wind angle: 90°	380C1F3	0	0	0	0	0	0
	380C2F1	17494	86937	154291	17494	86937	-154291
	380C2F2	17493	84203	150981	17493	84203	-150981
	380C2F3	17493	80858	147044	17493	80858	-147044
	RTG	0	0	0	7442	34079	-59623

NL3/4	GW / opgw	0	0	0	0	0	0
Construction/maintenance, +5°C	380C1F1	0	0	0	0	0	0
Permanent loads yg= 0.9	380C1F2	0	0	0	0	0	0
Wind angle: 90°	380C1F3	0	0	0	0	0	0
	380C2F1	16793	63651	124991	16793	63651	-124991
	380C2F2	16793	63008	124524	16793	63008	-124524
	380C2F3	16793	62223	124001	16793	62223	-124001
	RTG	0	0	0	5103	18422	-36878
NL3/1a	GW / opgw	0	0	0	0	0	0
Wind, 10°C	380C1F1	0	0	0	0	0	0
Permanent loads yg= 0.9	380C1F2	0	0	0	0	0	0
Wind angle: -45°	380C1F3	0	0	0	0	0	0
	380C2F1	14392	86607	145504	14386	51819	-105799
	380C2F2	14391	82689	140296	14386	51579	-105707
	380C2F3	14390	77827	133922	14386	51284	-105610
	RTG	0	0	0	3900	13898	-28588
NL3/1b	GW / opgw	0	0	0	0	0	0
Wind, -20°C	380C1F1	0	0	0	0	0	0
Permanent loads yg= 0.9	380C1F2	0	0	0	0	0	0
Wind angle: -45°	380C1F3	0	0	0	0	0	0
	380C2F1	14379	63668	124170	14378	56749	-120060
	380C2F2	14379	62870	123440	14378	56691	-120066
	380C2F3	14378	61901	122609	14378	56619	-120076
	RTG	0	0	0	3898	14981	-31754
NL3/3	GW / opgw	0	0	0	0	0	0
Wind, -5°C	380C1F1	0	0	0	0	0	0
Permanent loads yg= 0.9	380C1F2	0	0	0	0	0	0
Wind angle: -45°	380C1F3	0	0	0	0	0	0
	380C2F1	17494	89590	157566	17490	63656	-131934
	380C2F2	17494	86578	153852	17490	63470	-131899
	380C2F3	17493	82884	149412	17490	63240	-131865
	RTG	0	0	0	7441	24887	-51454
NL3/4	GW / opgw	0	0	0	0	0	0
Construction/maintenance, +5°C	380C1F1	0	0	0	0	0	0
Permanent loads yg= 0.9	380C1F2	0	0	0	0	0	0
Wind angle: -45°	380C1F3	0	0	0	0	0	0
	380C2F1	16793	64280	125476	16793	57943	-122620
	380C2F2	16793	63566	124928	16793	57887	-122630
	380C2F3	16793	62698	124311	16793	57817	-122644
	RTG	0	0	0	5103	17227	-36568

ZWW4HL450

Loadcases for tower strength (Special limit state)

		Ahead			Back		
Loadcase according to 50341-3-15	Att. Point	Vertical [N]	Transversal [N]	Longitudinal [N]	Vertical [N]	Transversal [N]	Longitudinal [N]
NL3/1a	GW / opgw	0	0	0	0	0	0
Wind, 10°C	380C1F1	0	0	0	0	0	0
Permanent loads yg= 1.2	380C1F2	0	0	0	0	0	0
Wind angle: 0°	380C1F3	0	0	0	0	0	0
	380C2F1	19186	66837	135197	19186	66837	-135197
	380C2F2	19186	66463	135041	19186	66463	-135041
	380C2F3	19186	66003	134874	19186	66003	-134874
	RTG	0	0	0	5200	17971	-36681
NL3/1b	GW / opgw	0	0	0	0	0	0
Wind, -20°C	380C1F1	0	0	0	0	0	0
Permanent loads yg= 1.2	380C1F2	0	0	0	0	0	0
Wind angle: 0°	380C1F3	0	0	0	0	0	0
	380C2F1	19175	71528	150891	19175	71528	-150891
	380C2F2	19175	71439	150899	19175	71439	-150899
	380C2F3	19175	71328	150912	19175	71328	-150912
	RTG	0	0	0	5198	19034	-40248
NL3/3	GW / opgw	0	0	0	0	0	0
Wind, -5°C	380C1F1	0	0	0	0	0	0
Permanent loads yg= 1.2	380C1F2	0	0	0	0	0	0
Wind angle: 0°	380C1F3	0	0	0	0	0	0
	380C2F1	22290	78209	160729	22290	78209	-160729
	380C2F2	22290	77916	160657	22290	77916	-160657
	380C2F3	22290	77554	160585	22290	77554	-160585
	RTG	0	0	0	8742	28711	-58644
NL3/4	GW / opgw	0	0	0	0	0	0
Construction/maintenance, +5°C	380C1F1	0	0	0	0	0	0
Permanent loads yg= 1.2	380C1F2	0	0	0	0	0	0
Wind angle: 0°	380C1F3	0	0	0	0	0	0
	380C2F1	21593	71608	151061	21593	71608	-151061
	380C2F2	21593	71521	151073	21593	71521	-151073
	380C2F3	21593	71413	151092	21593	71413	-151092
	RTG	0	0	0	6404	20903	-44254
NL3/1a	GW / opgw	0	0	0	0	0	0
Wind, 10°C	380C1F1	0	0	0	0	0	0
Permanent loads yg= 1.2	380C1F2	0	0	0	0	0	0
Wind angle: 45°	380C1F3	0	0	0	0	0	0
	380C2F1	19186	65285	134676	19192	95346	-164238
	380C2F2	19186	65068	134634	19191	91880	-160002
	380C2F3	19186	64800	134594	19190	87622	-154922
	RTG	0	0	0	5201	24138	-42576
NL3/1b	GW / opgw	0	0	0	0	0	0
Wind, -20°C	380C1F1	0	0	0	0	0	0
Permanent loads yg= 1.2	380C1F2	0	0	0	0	0	0
Wind angle: 45°	380C1F3	0	0	0	0	0	0
	380C2F1	19175	71149	150942	19176	77236	-153263
	380C2F2	19175	71094	150953	19176	76559	-152793
	380C2F3	19175	71025	150969	19176	75733	-152269
	RTG	0	0	0	5198	20279	-40663
NL3/3	GW / opgw	0	0	0	0	0	0
Wind, -5°C	380C1F1	0	0	0	0	0	0
Permanent loads yg= 1.2	380C1F2	0	0	0	0	0	0
Wind angle: 45°	380C1F3	0	0	0	0	0	0
	380C2F1	22290	76984	160516	22294	99752	-179353
	380C2F2	22290	76811	160506	22294	97105	-176421
	380C2F3	22290	76594	160504	22293	93874	-172976
	RTG	0	0	0	8745	37611	-66184
NL3/4	GW / opgw	0	0	0	0	0	0
Construction/maintenance, +5°C	380C1F1	0	0	0	0	0	0
Permanent loads yg= 1.2	380C1F2	0	0	0	0	0	0
Wind angle: 45°	380C1F3	0	0	0	0	0	0
	380C2F1	21593	71237	151130	21594	76993	-152736
	380C2F2	21593	71183	151143	21593	76365	-152373
	380C2F3	21593	71115	151161	21593	75598	-151972
	RTG	0	0	0	6404	22051	-44461
NL3/1a	GW / opgw	0	0	0	0	0	0
Wind, 10°C	380C1F1	0	0	0	0	0	0
Permanent loads yg= 1.2	380C1F2	0	0	0	0	0	0
Wind angle: 90°	380C1F3	0	0	0	0	0	0
	380C2F1	19191	92294	160503	19191	92294	-160503
	380C2F2	19190	89144	156719	19190	89144	-156719
	380C2F3	19189	85281	152205	19189	85281	-152205
	RTG	0	0	0	5201	23469	-41783

NL3/1b	GW / opgw	0	0	0	0	0	0
Wind, -20°C	380C1F1	0	0	0	0	0	0
Permanent loads yg= 1.2	380C1F2	0	0	0	0	0	0
Wind angle: 90°	380C1F3	0	0	0	0	0	0
	380C2F1	19176	76639	152848	19176	76639	-152848
	380C2F2	19176	76027	152449	19176	76027	-152449
	380C2F3	19176	75281	152007	19176	75281	-152007
	RTG	0	0	0	5198	20150	-40585
NL3/3	GW / opgw	0	0	0	0	0	0
Wind, -5°C	380C1F1	0	0	0	0	0	0
Permanent loads yg= 1.2	380C1F2	0	0	0	0	0	0
Wind angle: 90°	380C1F3	0	0	0	0	0	0
	380C2F1	22294	97420	176766	22294	97420	-176766
	380C2F2	22293	95026	174186	22293	95026	-174186
	380C2F3	22292	92109	171168	22292	92109	-171168
	RTG	0	0	0	8744	36656	-65146
NL3/4	GW / opgw	0	0	0	0	0	0
Construction/maintenance, +5°C	380C1F1	0	0	0	0	0	0
Permanent loads yg= 1.2	380C1F2	0	0	0	0	0	0
Wind angle: 90°	380C1F3	0	0	0	0	0	0
	380C2F1	21594	76440	152414	21594	76440	-152414
	380C2F2	21593	75872	152109	21593	75872	-152109
	380C2F3	21593	75175	151775	21593	75175	-151775
	RTG	0	0	0	6404	21936	-44412
NL3/1a	GW / opgw	0	0	0	0	0	0
Wind, 10°C	380C1F1	0	0	0	0	0	0
Permanent loads yg= 1.2	380C1F2	0	0	0	0	0	0
Wind angle: -45°	380C1F3	0	0	0	0	0	0
	380C2F1	19192	95346	164238	19186	65285	-134676
	380C2F2	19191	91880	160002	19186	65068	-134634
	380C2F3	19190	87622	154922	19186	64800	-134594
	RTG	0	0	0	5200	17631	-36594
NL3/1b	GW / opgw	0	0	0	0	0	0
Wind, -20°C	380C1F1	0	0	0	0	0	0
Permanent loads yg= 1.2	380C1F2	0	0	0	0	0	0
Wind angle: -45°	380C1F3	0	0	0	0	0	0
	380C2F1	19176	77236	153263	19175	71149	-150942
	380C2F2	19176	76559	152793	19175	71094	-150953
	380C2F3	19176	75733	152269	19175	71025	-150969
	RTG	0	0	0	5198	18949	-40263
NL3/3	GW / opgw	0	0	0	0	0	0
Wind, -5°C	380C1F1	0	0	0	0	0	0
Permanent loads yg= 1.2	380C1F2	0	0	0	0	0	0
Wind angle: -45°	380C1F3	0	0	0	0	0	0
	380C2F1	22294	99752	179353	22290	76984	-160516
	380C2F2	22294	97105	176421	22290	76811	-160506
	380C2F3	22293	93874	172976	22290	76594	-160504
	RTG	0	0	0	8742	28200	-58558
NL3/4	GW / opgw	0	0	0	0	0	0
Construction/maintenance, +5°C	380C1F1	0	0	0	0	0	0
Permanent loads yg= 1.2	380C1F2	0	0	0	0	0	0
Wind angle: -45°	380C1F3	0	0	0	0	0	0
	380C2F1	21594	76993	152736	21593	71237	-151130
	380C2F2	21593	76365	152373	21593	71183	-151143
	380C2F3	21593	75598	151972	21593	71115	-151161
	RTG	0	0	0	6404	20820	-44274
NL3/1a	GW / opgw	0	0	0	0	0	0
Wind, 10°C	380C1F1	0	0	0	0	0	0
Permanent loads yg= 0.9	380C1F2	0	0	0	0	0	0
Wind angle: 0°	380C1F3	0	0	0	0	0	0
	380C2F1	14387	53566	106740	14387	53566	-106740
	380C2F2	14386	53141	106473	14386	53141	-106473
	380C2F3	14386	52621	106177	14386	52621	-106177
	RTG	0	0	0	3900	14276	-28757
NL3/1b	GW / opgw	0	0	0	0	0	0
Wind, -20°C	380C1F1	0	0	0	0	0	0
Permanent loads yg= 0.9	380C1F2	0	0	0	0	0	0
Wind angle: 0°	380C1F3	0	0	0	0	0	0
	380C2F1	14378	57149	120055	14378	57149	-120055
	380C2F2	14378	57054	120051	14378	57054	-120051
	380C2F3	14378	56936	120050	14378	56936	-120050
	RTG	0	0	0	3898	15071	-31748

NL3/3	GW / opgw	0	0	0	0	0	0
Wind, -5°C	380C1F1	0	0	0	0	0	0
Permanent loads yg= 0.9	380C1F2	0	0	0	0	0	0
Wind angle: 0°	380C1F3	0	0	0	0	0	0
	380C2F1	17490	64986	132375	17490	64986	-132375
	380C2F2	17490	64666	132242	17490	64666	-132242
	380C2F3	17490	64272	132101	17490	64272	-132101
	RTG	0	0	0	7441	25426	-51599
NL3/4	GW / opgw	0	0	0	0	0	0
Construction/maintenance, +5°C	380C1F1	0	0	0	0	0	0
Permanent loads yg= 0.9	380C1F2	0	0	0	0	0	0
Wind angle: 0°	380C1F3	0	0	0	0	0	0
	380C2F1	16793	58328	122583	16793	58328	-122583
	380C2F2	16793	58238	122587	16793	58238	-122587
	380C2F3	16793	58124	122596	16793	58124	-122596
	RTG	0	0	0	5103	17311	-36553
NL3/1a	GW / opgw	0	0	0	0	0	0
Wind, 10°C	380C1F1	0	0	0	0	0	0
Permanent loads yg= 0.9	380C1F2	0	0	0	0	0	0
Wind angle: 45°	380C1F3	0	0	0	0	0	0
	380C2F1	14386	51819	105799	14392	86607	-145504
	380C2F2	14386	51579	105707	14391	82689	-140296
	380C2F3	14386	51284	105610	14390	77827	-133922
	RTG	0	0	0	3900	21457	-36828
NL3/1b	GW / opgw	0	0	0	0	0	0
Wind, -20°C	380C1F1	0	0	0	0	0	0
Permanent loads yg= 0.9	380C1F2	0	0	0	0	0	0
Wind angle: 45°	380C1F3	0	0	0	0	0	0
	380C2F1	14378	56749	120060	14379	63668	-124170
	380C2F2	14378	56691	120066	14379	62870	-123440
	380C2F3	14378	56619	120076	14378	61901	-122609
	RTG	0	0	0	3898	16474	-32504
NL3/3	GW / opgw	0	0	0	0	0	0
Wind, -5°C	380C1F1	0	0	0	0	0	0
Permanent loads yg= 0.9	380C1F2	0	0	0	0	0	0
Wind angle: 45°	380C1F3	0	0	0	0	0	0
	380C2F1	17490	63656	131934	17494	89590	-157566
	380C2F2	17490	63470	131899	17494	86578	-153852
	380C2F3	17490	63240	131865	17493	82884	-149412
	RTG	0	0	0	7443	35116	-60836
NL3/4	GW / opgw	0	0	0	0	0	0
Construction/maintenance, +5°C	380C1F1	0	0	0	0	0	0
Permanent loads yg= 0.9	380C1F2	0	0	0	0	0	0
Wind angle: 45°	380C1F3	0	0	0	0	0	0
	380C2F1	16793	57943	122620	16793	64280	-125476
	380C2F2	16793	57887	122630	16793	63566	-124928
	380C2F3	16793	57817	122644	16793	62698	-124311
	RTG	0	0	0	5103	18550	-36954
NL3/1a	GW / opgw	0	0	0	0	0	0
Wind, 10°C	380C1F1	0	0	0	0	0	0
Permanent loads yg= 0.9	380C1F2	0	0	0	0	0	0
Wind angle: 90°	380C1F3	0	0	0	0	0	0
	380C2F1	14391	83159	140917	14391	83159	-140917
	380C2F2	14390	79571	136195	14390	79571	-136195
	380C2F3	14390	75132	130445	14390	75132	-130445
	RTG	0	0	0	3900	20689	-35823
NL3/1b	GW / opgw	0	0	0	0	0	0
Wind, -20°C	380C1F1	0	0	0	0	0	0
Permanent loads yg= 0.9	380C1F2	0	0	0	0	0	0
Wind angle: 90°	380C1F3	0	0	0	0	0	0
	380C2F1	14379	62965	123525	14379	62965	-123525
	380C2F2	14378	62246	122898	14378	62246	-122898
	380C2F3	14378	61374	122186	14378	61374	-122186
	RTG	0	0	0	3898	16324	-32380
NL3/3	GW / opgw	0	0	0	0	0	0
Wind, -5°C	380C1F1	0	0	0	0	0	0
Permanent loads yg= 0.9	380C1F2	0	0	0	0	0	0
Wind angle: 90°	380C1F3	0	0	0	0	0	0
	380C2F1	17494	86937	154291	17494	86937	-154291
	380C2F2	17493	84203	150981	17493	84203	-150981
	380C2F3	17493	80858	147044	17493	80858	-147044
	RTG	0	0	0	7442	34079	-59623

NL3/4	GW / opgw	0	0	0	0	0	0
Construction/maintenance, +5°C	380C1F1	0	0	0	0	0	0
Permanent loads yg= 0.9	380C1F2	0	0	0	0	0	0
Wind angle: 90°	380C1F3	0	0	0	0	0	0
	380C2F1	16793	63651	124991	16793	63651	-124991
	380C2F2	16793	63008	124524	16793	63008	-124524
	380C2F3	16793	62223	124001	16793	62223	-124001
	RTG	0	0	0	5103	18422	-36878
NL3/1a	GW / opgw	0	0	0	0	0	0
Wind, 10°C	380C1F1	0	0	0	0	0	0
Permanent loads yg= 0.9	380C1F2	0	0	0	0	0	0
Wind angle: -45°	380C1F3	0	0	0	0	0	0
	380C2F1	14392	86607	145504	14386	51819	-105799
	380C2F2	14391	82689	140296	14386	51579	-105707
	380C2F3	14390	77827	133922	14386	51284	-105610
	RTG	0	0	0	3900	13898	-28588
NL3/1b	GW / opgw	0	0	0	0	0	0
Wind, -20°C	380C1F1	0	0	0	0	0	0
Permanent loads yg= 0.9	380C1F2	0	0	0	0	0	0
Wind angle: -45°	380C1F3	0	0	0	0	0	0
	380C2F1	14379	63668	124170	14378	56749	-120060
	380C2F2	14379	62870	123440	14378	56691	-120066
	380C2F3	14378	61901	122609	14378	56619	-120076
	RTG	0	0	0	3898	14981	-31754
NL3/3	GW / opgw	0	0	0	0	0	0
Wind, -5°C	380C1F1	0	0	0	0	0	0
Permanent loads yg= 0.9	380C1F2	0	0	0	0	0	0
Wind angle: -45°	380C1F3	0	0	0	0	0	0
	380C2F1	17494	89590	157566	17490	63656	-131934
	380C2F2	17494	86578	153852	17490	63470	-131899
	380C2F3	17493	82884	149412	17490	63240	-131865
	RTG	0	0	0	7441	24887	-51454
NL3/4	GW / opgw	0	0	0	0	0	0
Construction/maintenance, +5°C	380C1F1	0	0	0	0	0	0
Permanent loads yg= 0.9	380C1F2	0	0	0	0	0	0
Wind angle: -45°	380C1F3	0	0	0	0	0	0
	380C2F1	16793	64280	125476	16793	57943	-122620
	380C2F2	16793	63566	124928	16793	57887	-122630
	380C2F3	16793	62698	124311	16793	57817	-122644
	RTG	0	0	0	5103	17227	-36568

ZWW4HL450

Loadcases for tower strength (Special limit state)

		Ahead			Back		
Loadcase according to 50341-3-15	Att. Point	Vertical [N]	Transversal [N]	Longitudinal [N]	Vertical [N]	Transversal [N]	Longitudinal [N]
NL3/1a	GW / opgw	2604	9311	18517	0	0	0
Wind, 10°C	380C1F1	9593	33418	67599	0	0	0
Permanent loads yg= 1.2	380C1F2	9593	33231	67520	0	0	0
Wind angle: 0°	380C1F3	9593	33001	67437	0	0	0
	380C2F1	0	0	0	19186	66837	-135197
	380C2F2	0	0	0	19186	66463	-135041
	380C2F3	0	0	0	19186	66003	-134874
	RTG	0	0	0	5200	17971	-36681
NL3/1b	GW / opgw	2603	9665	20282	0	0	0
Wind, -20°C	380C1F1	9588	35764	75445	0	0	0
Permanent loads yg= 1.2	380C1F2	9588	35720	75449	0	0	0
Wind angle: 0°	380C1F3	9588	35664	75456	0	0	0
	380C2F1	0	0	0	19175	71528	-150891
	380C2F2	0	0	0	19175	71439	-150899
	380C2F3	0	0	0	19175	71328	-150912
	RTG	0	0	0	5198	19034	-40248
NL3/3	GW / opgw	4371	14849	29555	0	0	0
Wind, -5°C	380C1F1	11145	39104	80365	0	0	0
Permanent loads yg= 1.2	380C1F2	11145	38958	80328	0	0	0
Wind angle: 0°	380C1F3	11145	38777	80292	0	0	0
	380C2F1	0	0	0	22290	78209	-160729
	380C2F2	0	0	0	22290	77916	-160657
	380C2F3	0	0	0	22290	77554	-160585
	RTG	0	0	0	8742	28711	-58644
NL3/4	GW / opgw	3206	10537	22151	0	0	0
Construction/maintenance, +5°C	380C1F1	10797	35804	75530	0	0	0
Permanent loads yg= 1.2	380C1F2	10797	35761	75537	0	0	0
Wind angle: 0°	380C1F3	10796	35706	75546	0	0	0
	380C2F1	0	0	0	21593	71608	-151061
	380C2F2	0	0	0	21593	71521	-151073
	380C2F3	0	0	0	21593	71413	-151092
	RTG	0	0	0	6404	20903	-44254
NL3/1a	GW / opgw	2604	9007	18365	0	0	0
Wind, 10°C	380C1F1	9593	32643	67338	0	0	0
Permanent loads yg= 1.2	380C1F2	9593	32534	67317	0	0	0
Wind angle: 45°	380C1F3	9593	32400	67297	0	0	0
	380C2F1	0	0	0	19192	95346	-164238
	380C2F2	0	0	0	19191	91880	-160002
	380C2F3	0	0	0	19190	87622	-154922
	RTG	0	0	0	5201	24138	-42576
NL3/1b	GW / opgw	2603	9595	20284	0	0	0
Wind, -20°C	380C1F1	9588	35575	75471	0	0	0
Permanent loads yg= 1.2	380C1F2	9588	35547	75477	0	0	0
Wind angle: 45°	380C1F3	9588	35512	75485	0	0	0
	380C2F1	0	0	0	19176	77236	-153263
	380C2F2	0	0	0	19176	76559	-152793
	380C2F3	0	0	0	19176	75733	-152269
	RTG	0	0	0	5198	20279	-40663
NL3/3	GW / opgw	4371	14397	29375	0	0	0
Wind, -5°C	380C1F1	11145	38492	80258	0	0	0
Permanent loads yg= 1.2	380C1F2	11145	38405	80253	0	0	0
Wind angle: 45°	380C1F3	11145	38297	80252	0	0	0
	380C2F1	0	0	0	22294	99752	-179353
	380C2F2	0	0	0	22294	97105	-176421
	380C2F3	0	0	0	22293	93874	-172976
	RTG	0	0	0	8745	37611	-66184
NL3/4	GW / opgw	3206	10470	22161	0	0	0
Construction/maintenance, +5°C	380C1F1	10796	35619	75565	0	0	0
Permanent loads yg= 1.2	380C1F2	10796	35592	75572	0	0	0
Wind angle: 45°	380C1F3	10796	35557	75581	0	0	0
	380C2F1	0	0	0	21594	76993	-152736
	380C2F2	0	0	0	21593	76365	-152373
	380C2F3	0	0	0	21593	75598	-151972
	RTG	0	0	0	6404	22051	-44461
NL3/1a	GW / opgw	2605	14398	24209	0	0	0
Wind, 10°C	380C1F1	9595	46147	80252	0	0	0
Permanent loads yg= 1.2	380C1F2	9595	44572	78360	0	0	0
Wind angle: 90°	380C1F3	9595	42641	76103	0	0	0
	380C2F1	0	0	0	19191	92294	-160503
	380C2F2	0	0	0	19190	89144	-156719
	380C2F3	0	0	0	19189	85281	-152205
	RTG	0	0	0	5201	23469	-41783

NL3/1b	GW / opgw	2603	10671	20833	0	0	0
Wind, -20°C	380C1F1	9588	38320	76424	0	0	0
Permanent loads yg= 1.2	380C1F2	9588	38014	76225	0	0	0
Wind angle: 90°	380C1F3	9588	37640	76003	0	0	0
	380C2F1	0	0	0	19176	76639	-152848
	380C2F2	0	0	0	19176	76027	-152449
	380C2F3	0	0	0	19176	75281	-152007
	RTG	0	0	0	5198	20150	-40585
NL3/3	GW / opgw	4373	22176	37021	0	0	0
Wind, -5°C	380C1F1	11147	48710	88383	0	0	0
Permanent loads yg= 1.2	380C1F2	11147	47513	87093	0	0	0
Wind angle: 90°	380C1F3	11146	46054	85584	0	0	0
	380C2F1	0	0	0	22294	97420	-176766
	380C2F2	0	0	0	22293	95026	-174186
	380C2F3	0	0	0	22292	92109	-171168
	RTG	0	0	0	8744	36656	-65146
NL3/4	GW / opgw	3206	11445	22493	0	0	0
Construction/maintenance, +5°C	380C1F1	10797	38220	76207	0	0	0
Permanent loads yg= 1.2	380C1F2	10797	37936	76055	0	0	0
Wind angle: 90°	380C1F3	10797	37588	75888	0	0	0
	380C2F1	0	0	0	21594	76440	-152414
	380C2F2	0	0	0	21593	75872	-152109
	380C2F3	0	0	0	21593	75175	-151775
	RTG	0	0	0	6404	21936	-44412
NL3/1a	GW / opgw	2605	14990	24978	0	0	0
Wind, 10°C	380C1F1	9596	47673	82119	0	0	0
Permanent loads yg= 1.2	380C1F2	9595	45940	80001	0	0	0
Wind angle: -45°	380C1F3	9595	43811	77461	0	0	0
	380C2F1	0	0	0	19186	65285	-134676
	380C2F2	0	0	0	19186	65068	-134634
	380C2F3	0	0	0	19186	64800	-134594
	RTG	0	0	0	5200	17631	-36594
NL3/1b	GW / opgw	2603	10791	20938	0	0	0
Wind, -20°C	380C1F1	9588	38618	76632	0	0	0
Permanent loads yg= 1.2	380C1F2	9588	38279	76397	0	0	0
Wind angle: -45°	380C1F3	9588	37866	76134	0	0	0
	380C2F1	0	0	0	19175	71149	-150942
	380C2F2	0	0	0	19175	71094	-150953
	380C2F3	0	0	0	19175	71025	-150969
	RTG	0	0	0	5198	18949	-40263
NL3/3	GW / opgw	4373	23024	38048	0	0	0
Wind, -5°C	380C1F1	11147	49876	89677	0	0	0
Permanent loads yg= 1.2	380C1F2	11147	48552	88211	0	0	0
Wind angle: -45°	380C1F3	11146	46937	86488	0	0	0
	380C2F1	0	0	0	22290	76984	-160516
	380C2F2	0	0	0	22290	76811	-160506
	380C2F3	0	0	0	22290	76594	-160504
	RTG	0	0	0	8742	28200	-58558
NL3/4	GW / opgw	3206	11551	22566	0	0	0
Construction/maintenance, +5°C	380C1F1	10797	38497	76368	0	0	0
Permanent loads yg= 1.2	380C1F2	10797	38183	76186	0	0	0
Wind angle: -45°	380C1F3	10797	37799	75986	0	0	0
	380C2F1	0	0	0	21593	71237	-151130
	380C2F2	0	0	0	21593	71183	-151143
	380C2F3	0	0	0	21593	71115	-151161
	RTG	0	0	0	6404	20820	-44274
NL3/1a	GW / opgw	1953	7510	14656	0	0	0
Wind, 10°C	380C1F1	7193	26783	53370	0	0	0
Permanent loads yg= 0.9	380C1F2	7193	26570	53236	0	0	0
Wind angle: 0°	380C1F3	7193	26310	53089	0	0	0
	380C2F1	0	0	0	14387	53566	-106740
	380C2F2	0	0	0	14386	53141	-106473
	380C2F3	0	0	0	14386	52621	-106177
	RTG	0	0	0	3900	14276	-28757
NL3/1b	GW / opgw	1952	7684	16032	0	0	0
Wind, -20°C	380C1F1	7189	28574	60027	0	0	0
Permanent loads yg= 0.9	380C1F2	7189	28527	60025	0	0	0
Wind angle: 0°	380C1F3	7189	28468	60025	0	0	0
	380C2F1	0	0	0	14378	57149	-120055
	380C2F2	0	0	0	14378	57054	-120051
	380C2F3	0	0	0	14378	56936	-120050
	RTG	0	0	0	3898	15071	-31748

NL3/3	GW / opgw	3719	13241	26105	0	0	0
Wind, -5°C	380C1F1	8745	32493	66188	0	0	0
Permanent loads yg= 0.9	380C1F2	8745	32333	66121	0	0	0
Wind angle: 0°	380C1F3	8745	32136	66050	0	0	0
	380C2F1	0	0	0	17490	64986	-132375
	380C2F2	0	0	0	17490	64666	-132242
	380C2F3	0	0	0	17490	64272	-132101
	RTG	0	0	0	7441	25426	-51599
NL3/4	GW / opgw	2554	8745	18308	0	0	0
Construction/maintenance, +5°C	380C1F1	8396	29164	61291	0	0	0
Permanent loads yg= 0.9	380C1F2	8396	29119	61294	0	0	0
Wind angle: 0°	380C1F3	8396	29062	61298	0	0	0
	380C2F1	0	0	0	16793	58328	-122583
	380C2F2	0	0	0	16793	58238	-122587
	380C2F3	0	0	0	16793	58124	-122596
	RTG	0	0	0	5103	17311	-36553
NL3/1a	GW / opgw	1953	7161	14408	0	0	0
Wind, 10°C	380C1F1	7193	25909	52899	0	0	0
Permanent loads yg= 0.9	380C1F2	7193	25789	52854	0	0	0
Wind angle: 45°	380C1F3	7193	25642	52805	0	0	0
	380C2F1	0	0	0	14392	86607	-145504
	380C2F2	0	0	0	14391	82689	-140296
	380C2F3	0	0	0	14390	77827	-133922
	RTG	0	0	0	3900	21457	-36828
NL3/1b	GW / opgw	1952	7608	16024	0	0	0
Wind, -20°C	380C1F1	7189	28374	60030	0	0	0
Permanent loads yg= 0.9	380C1F2	7189	28346	60033	0	0	0
Wind angle: 45°	380C1F3	7189	28309	60038	0	0	0
	380C2F1	0	0	0	14379	63668	-124170
	380C2F2	0	0	0	14379	62870	-123440
	380C2F3	0	0	0	14378	61901	-122609
	RTG	0	0	0	3898	16474	-32504
NL3/3	GW / opgw	3719	12755	25855	0	0	0
Wind, -5°C	380C1F1	8745	31828	65967	0	0	0
Permanent loads yg= 0.9	380C1F2	8745	31735	65949	0	0	0
Wind angle: 45°	380C1F3	8745	31620	65933	0	0	0
	380C2F1	0	0	0	17494	89590	-157566
	380C2F2	0	0	0	17494	86578	-153852
	380C2F3	0	0	0	17493	82884	-149412
	RTG	0	0	0	7443	35116	-60836
NL3/4	GW / opgw	2554	8675	18311	0	0	0
Construction/maintenance, +5°C	380C1F1	8396	28972	61310	0	0	0
Permanent loads yg= 0.9	380C1F2	8396	28944	61315	0	0	0
Wind angle: 45°	380C1F3	8396	28908	61322	0	0	0
	380C2F1	0	0	0	16793	64280	-125476
	380C2F2	0	0	0	16793	63566	-124928
	380C2F3	0	0	0	16793	62698	-124311
	RTG	0	0	0	5103	18550	-36954
NL3/1a	GW / opgw	1953	13342	21945	0	0	0
Wind, 10°C	380C1F1	7195	41579	70459	0	0	0
Permanent loads yg= 0.9	380C1F2	7195	39785	68097	0	0	0
Wind angle: 90°	380C1F3	7195	37566	65223	0	0	0
	380C2F1	0	0	0	14391	83159	-140917
	380C2F2	0	0	0	14390	79571	-136195
	380C2F3	0	0	0	14390	75132	-130445
	RTG	0	0	0	3900	20689	-35823
NL3/1b	GW / opgw	1952	8846	16921	0	0	0
Wind, -20°C	380C1F1	7189	31482	61763	0	0	0
Permanent loads yg= 0.9	380C1F2	7189	31123	61449	0	0	0
Wind angle: 90°	380C1F3	7189	30687	61093	0	0	0
	380C2F1	0	0	0	14379	62965	-123525
	380C2F2	0	0	0	14378	62246	-122898
	380C2F3	0	0	0	14378	61374	-122186
	RTG	0	0	0	3898	16324	-32380
NL3/3	GW / opgw	3721	21176	34877	0	0	0
Wind, -5°C	380C1F1	8747	43469	77146	0	0	0
Permanent loads yg= 0.9	380C1F2	8747	42102	75490	0	0	0
Wind angle: 90°	380C1F3	8746	40429	73522	0	0	0
	380C2F1	0	0	0	17494	86937	-154291
	380C2F2	0	0	0	17493	84203	-150981
	380C2F3	0	0	0	17493	80858	-147044
	RTG	0	0	0	7442	34079	-59623

NL3/4	GW / opgw	2554	9743	18844	0	0	0
Construction/maintenance, +5°C	380C1F1	8397	31826	62496	0	0	0
Permanent loads yg= 0.9	380C1F2	8397	31504	62262	0	0	0
Wind angle: 90°	380C1F3	8397	31111	62000	0	0	0
	380C2F1	0	0	0	16793	63651	-124991
	380C2F2	0	0	0	16793	63008	-124524
	380C2F3	0	0	0	16793	62223	-124001
	RTG	0	0	0	5103	18422	-36878
NL3/1a	GW / opgw	1954	13991	22837	0	0	0
Wind, 10°C	380C1F1	7196	43304	72752	0	0	0
Permanent loads yg= 0.9	380C1F2	7195	41344	70148	0	0	0
Wind angle: -45°	380C1F3	7195	38913	66961	0	0	0
	380C2F1	0	0	0	14386	51819	-105799
	380C2F2	0	0	0	14386	51579	-105707
	380C2F3	0	0	0	14386	51284	-105610
	RTG	0	0	0	3900	13898	-28588
NL3/1b	GW / opgw	1952	8989	17075	0	0	0
Wind, -20°C	380C1F1	7189	31834	62085	0	0	0
Permanent loads yg= 0.9	380C1F2	7189	31435	61720	0	0	0
Wind angle: -45°	380C1F3	7189	30951	61305	0	0	0
	380C2F1	0	0	0	14378	56749	-120060
	380C2F2	0	0	0	14378	56691	-120066
	380C2F3	0	0	0	14378	56619	-120076
	RTG	0	0	0	3898	14981	-31754
NL3/3	GW / opgw	3721	22075	36015	0	0	0
Wind, -5°C	380C1F1	8747	44795	78783	0	0	0
Permanent loads yg= 0.9	380C1F2	8747	43289	76926	0	0	0
Wind angle: -45°	380C1F3	8747	41442	74706	0	0	0
	380C2F1	0	0	0	17490	63656	-131934
	380C2F2	0	0	0	17490	63470	-131899
	380C2F3	0	0	0	17490	63240	-131865
	RTG	0	0	0	7441	24887	-51454
NL3/4	GW / opgw	2554	9863	18946	0	0	0
Construction/maintenance, +5°C	380C1F1	8397	32140	62738	0	0	0
Permanent loads yg= 0.9	380C1F2	8397	31783	62464	0	0	0
Wind angle: -45°	380C1F3	8397	31349	62156	0	0	0
	380C2F1	0	0	0	16793	57943	-122620
	380C2F2	0	0	0	16793	57887	-122630
	380C2F3	0	0	0	16793	57817	-122644
	RTG	0	0	0	5103	17227	-36568

ZWW4HL450

Loadcases for tower strength (Special limit state)

		Ahead			Back		
Loadcase according to 50341-3-15	Att. Point	Vertical [N]	Transversal [N]	Longitudinal [N]	Vertical [N]	Transversal [N]	Longitudinal [N]
NL3/1a	GW / opgw	0	0	0	2604	9311	-18517
Wind, 10°C	380C1F1	0	0	0	9593	33418	-67599
Permanent loads yg= 1.2	380C1F2	0	0	0	9593	33231	-67520
Wind angle: 0°	380C1F3	0	0	0	9593	33001	-67437
	380C2F1	19186	66837	135197	19186	66837	-135197
	380C2F2	19186	66463	135041	19186	66463	-135041
	380C2F3	19186	66003	134874	19186	66003	-134874
	RTG	5200	17971	36681	5200	17971	-36681
NL3/1b	GW / opgw	0	0	0	2603	9665	-20282
Wind, -20°C	380C1F1	0	0	0	9588	35764	-75445
Permanent loads yg= 1.2	380C1F2	0	0	0	9588	35720	-75449
Wind angle: 0°	380C1F3	0	0	0	9588	35664	-75456
	380C2F1	19175	71528	150891	19175	71528	-150891
	380C2F2	19175	71439	150899	19175	71439	-150899
	380C2F3	19175	71328	150912	19175	71328	-150912
	RTG	5198	19034	40248	5198	19034	-40248
NL3/3	GW / opgw	0	0	0	4371	14849	-29555
Wind, -5°C	380C1F1	0	0	0	11145	39104	-80365
Permanent loads yg= 1.2	380C1F2	0	0	0	11145	38958	-80328
Wind angle: 0°	380C1F3	0	0	0	11145	38777	-80292
	380C2F1	22290	78209	160729	22290	78209	-160729
	380C2F2	22290	77916	160657	22290	77916	-160657
	380C2F3	22290	77554	160585	22290	77554	-160585
	RTG	8742	28711	58644	8742	28711	-58644
NL3/4	GW / opgw	0	0	0	3206	10537	-22151
Construction/maintenance, +5°C	380C1F1	0	0	0	10797	35804	-75530
Permanent loads yg= 1.2	380C1F2	0	0	0	10797	35761	-75537
Wind angle: 0°	380C1F3	0	0	0	10796	35706	-75546
	380C2F1	21593	71608	151061	21593	71608	-151061
	380C2F2	21593	71521	151073	21593	71521	-151073
	380C2F3	21593	71413	151092	21593	71413	-151092
	RTG	6404	20903	44254	6404	20903	-44254
NL3/1a	GW / opgw	0	0	0	2605	14990	-24978
Wind, 10°C	380C1F1	0	0	0	9596	47673	-82119
Permanent loads yg= 1.2	380C1F2	0	0	0	9595	45940	-80001
Wind angle: 45°	380C1F3	0	0	0	9595	43811	-77461
	380C2F1	19186	65285	134676	19192	95346	-164238
	380C2F2	19186	65068	134634	19191	91880	-160002
	380C2F3	19186	64800	134594	19190	87622	-154922
	RTG	5200	17631	36594	5201	24138	-42576
NL3/1b	GW / opgw	0	0	0	2603	10791	-20938
Wind, -20°C	380C1F1	0	0	0	9588	38618	-76632
Permanent loads yg= 1.2	380C1F2	0	0	0	9588	38279	-76397
Wind angle: 45°	380C1F3	0	0	0	9588	37866	-76134
	380C2F1	19175	71149	150942	19176	77236	-153263
	380C2F2	19175	71094	150953	19176	76559	-152793
	380C2F3	19175	71025	150969	19176	75733	-152269
	RTG	5198	18949	40263	5198	20279	-40663
NL3/3	GW / opgw	0	0	0	4373	23024	-38048
Wind, -5°C	380C1F1	0	0	0	11147	49876	-89677
Permanent loads yg= 1.2	380C1F2	0	0	0	11147	48552	-88211
Wind angle: 45°	380C1F3	0	0	0	11146	46937	-86488
	380C2F1	22290	76984	160516	22294	99752	-179353
	380C2F2	22290	76811	160506	22294	97105	-176421
	380C2F3	22290	76594	160504	22293	93874	-172976
	RTG	8742	28200	58558	8745	37611	-66184
NL3/4	GW / opgw	0	0	0	3206	11551	-22566
Construction/maintenance, +5°C	380C1F1	0	0	0	10797	38497	-76368
Permanent loads yg= 1.2	380C1F2	0	0	0	10797	38183	-76186
Wind angle: 45°	380C1F3	0	0	0	10797	37799	-75986
	380C2F1	21593	71237	151130	21594	76993	-152736
	380C2F2	21593	71183	151143	21593	76365	-152373
	380C2F3	21593	71115	151161	21593	75598	-151972
	RTG	6404	20820	44274	6404	22051	-44461
NL3/1a	GW / opgw	0	0	0	2605	14398	-24209
Wind, 10°C	380C1F1	0	0	0	9595	46147	-80252
Permanent loads yg= 1.2	380C1F2	0	0	0	9595	44572	-78360
Wind angle: 90°	380C1F3	0	0	0	9595	42641	-76103
	380C2F1	19191	92294	160503	19191	92294	-160503
	380C2F2	19190	89144	156719	19190	89144	-156719
	380C2F3	19189	85281	152205	19189	85281	-152205
	RTG	5201	23469	41783	5201	23469	-41783

NL3/1b	GW / opgw	0	0	0	2603	10671	-20833
Wind, -20°C	380C1F1	0	0	0	9588	38320	-76424
Permanent loads yg= 1.2	380C1F2	0	0	0	9588	38014	-76225
Wind angle: 90°	380C1F3	0	0	0	9588	37640	-76003
	380C2F1	19176	76639	152848	19176	76639	-152848
	380C2F2	19176	76027	152449	19176	76027	-152449
	380C2F3	19176	75281	152007	19176	75281	-152007
	RTG	5198	20150	40585	5198	20150	-40585
NL3/3	GW / opgw	0	0	0	4373	22176	-37021
Wind, -5°C	380C1F1	0	0	0	11147	48710	-88383
Permanent loads yg= 1.2	380C1F2	0	0	0	11147	47513	-87093
Wind angle: 90°	380C1F3	0	0	0	11146	46054	-85584
	380C2F1	22294	97420	176766	22294	97420	-176766
	380C2F2	22293	95026	174186	22293	95026	-174186
	380C2F3	22292	92109	171168	22292	92109	-171168
	RTG	8744	36656	65146	8744	36656	-65146
NL3/4	GW / opgw	0	0	0	3206	11445	-22493
Construction/maintenance, +5°C	380C1F1	0	0	0	10797	38220	-76207
Permanent loads yg= 1.2	380C1F2	0	0	0	10797	37936	-76055
Wind angle: 90°	380C1F3	0	0	0	10797	37588	-75888
	380C2F1	21594	76440	152414	21594	76440	-152414
	380C2F2	21593	75872	152109	21593	75872	-152109
	380C2F3	21593	75175	151775	21593	75175	-151775
	RTG	6404	21936	44412	6404	21936	-44412
NL3/1a	GW / opgw	0	0	0	2604	9007	-18365
Wind, 10°C	380C1F1	0	0	0	9593	32643	-67338
Permanent loads yg= 1.2	380C1F2	0	0	0	9593	32534	-67317
Wind angle: -45°	380C1F3	0	0	0	9593	32400	-67297
	380C2F1	19192	95346	164238	19186	65285	-134676
	380C2F2	19191	91880	160002	19186	65068	-134634
	380C2F3	19190	87622	154922	19186	64800	-134594
	RTG	5201	24138	42576	5200	17631	-36594
NL3/1b	GW / opgw	0	0	0	2603	9595	-20284
Wind, -20°C	380C1F1	0	0	0	9588	35575	-75471
Permanent loads yg= 1.2	380C1F2	0	0	0	9588	35547	-75477
Wind angle: -45°	380C1F3	0	0	0	9588	35512	-75485
	380C2F1	19176	77236	153263	19175	71149	-150942
	380C2F2	19176	76559	152793	19175	71094	-150953
	380C2F3	19176	75733	152269	19175	71025	-150969
	RTG	5198	20279	40663	5198	18949	-40263
NL3/3	GW / opgw	0	0	0	4371	14397	-29375
Wind, -5°C	380C1F1	0	0	0	11145	38492	-80258
Permanent loads yg= 1.2	380C1F2	0	0	0	11145	38405	-80253
Wind angle: -45°	380C1F3	0	0	0	11145	38297	-80252
	380C2F1	22294	99752	179353	22290	76984	-160516
	380C2F2	22294	97105	176421	22290	76811	-160506
	380C2F3	22293	93874	172976	22290	76594	-160504
	RTG	8745	37611	66184	8742	28200	-58558
NL3/4	GW / opgw	0	0	0	3206	10470	-22161
Construction/maintenance, +5°C	380C1F1	0	0	0	10796	35619	-75565
Permanent loads yg= 1.2	380C1F2	0	0	0	10796	35592	-75572
Wind angle: -45°	380C1F3	0	0	0	10796	35557	-75581
	380C2F1	21594	76993	152736	21593	71237	-151130
	380C2F2	21593	76365	152373	21593	71183	-151143
	380C2F3	21593	75598	151972	21593	71115	-151161
	RTG	6404	22051	44461	6404	20820	-44274
NL3/1a	GW / opgw	0	0	0	1953	7510	-14656
Wind, 10°C	380C1F1	0	0	0	7193	26783	-53370
Permanent loads yg= 0.9	380C1F2	0	0	0	7193	26570	-53236
Wind angle: 0°	380C1F3	0	0	0	7193	26310	-53089
	380C2F1	14387	53566	106740	14387	53566	-106740
	380C2F2	14386	53141	106473	14386	53141	-106473
	380C2F3	14386	52621	106177	14386	52621	-106177
	RTG	3900	14276	28757	3900	14276	-28757
NL3/1b	GW / opgw	0	0	0	1952	7684	-16032
Wind, -20°C	380C1F1	0	0	0	7189	28574	-60027
Permanent loads yg= 0.9	380C1F2	0	0	0	7189	28527	-60025
Wind angle: 0°	380C1F3	0	0	0	7189	28468	-60025
	380C2F1	14378	57149	120055	14378	57149	-120055
	380C2F2	14378	57054	120051	14378	57054	-120051
	380C2F3	14378	56936	120050	14378	56936	-120050
	RTG	3898	15071	31748	3898	15071	-31748

NL3/3	GW / opgw	0	0	0	3719	13241	-26105
Wind, -5°C	380C1F1	0	0	0	8745	32493	-66188
Permanent loads yg= 0.9	380C1F2	0	0	0	8745	32333	-66121
Wind angle: 0°	380C1F3	0	0	0	8745	32136	-66050
	380C2F1	17490	64986	132375	17490	64986	-132375
	380C2F2	17490	64666	132242	17490	64666	-132242
	380C2F3	17490	64272	132101	17490	64272	-132101
	RTG	7441	25426	51599	7441	25426	-51599
NL3/4	GW / opgw	0	0	0	2554	8745	-18308
Construction/maintenance, +5°C	380C1F1	0	0	0	8396	29164	-61291
Permanent loads yg= 0.9	380C1F2	0	0	0	8396	29119	-61294
Wind angle: 0°	380C1F3	0	0	0	8396	29062	-61298
	380C2F1	16793	58328	122583	16793	58328	-122583
	380C2F2	16793	58238	122587	16793	58238	-122587
	380C2F3	16793	58124	122596	16793	58124	-122596
	RTG	5103	17311	36553	5103	17311	-36553
NL3/1a	GW / opgw	0	0	0	1954	13991	-22837
Wind, 10°C	380C1F1	0	0	0	7196	43304	-72752
Permanent loads yg= 0.9	380C1F2	0	0	0	7195	41344	-70148
Wind angle: 45°	380C1F3	0	0	0	7195	38913	-66961
	380C2F1	14386	51819	105799	14392	86607	-145504
	380C2F2	14386	51579	105707	14391	82689	-140296
	380C2F3	14386	51284	105610	14390	77827	-133922
	RTG	3900	13898	28588	3900	21457	-36828
NL3/1b	GW / opgw	0	0	0	1952	8989	-17075
Wind, -20°C	380C1F1	0	0	0	7189	31834	-62085
Permanent loads yg= 0.9	380C1F2	0	0	0	7189	31435	-61720
Wind angle: 45°	380C1F3	0	0	0	7189	30951	-61305
	380C2F1	14378	56749	120060	14379	63668	-124170
	380C2F2	14378	56691	120066	14379	62870	-123440
	380C2F3	14378	56619	120076	14378	61901	-122609
	RTG	3898	14981	31754	3898	16474	-32504
NL3/3	GW / opgw	0	0	0	3721	22075	-36015
Wind, -5°C	380C1F1	0	0	0	8747	44795	-78783
Permanent loads yg= 0.9	380C1F2	0	0	0	8747	43289	-76926
Wind angle: 45°	380C1F3	0	0	0	8747	41442	-74706
	380C2F1	17490	63656	131934	17494	89590	-157566
	380C2F2	17490	63470	131899	17494	86578	-153852
	380C2F3	17490	63240	131865	17493	82884	-149412
	RTG	7441	24887	51454	7443	35116	-60836
NL3/4	GW / opgw	0	0	0	2554	9863	-18946
Construction/maintenance, +5°C	380C1F1	0	0	0	8397	32140	-62738
Permanent loads yg= 0.9	380C1F2	0	0	0	8397	31783	-62464
Wind angle: 45°	380C1F3	0	0	0	8397	31349	-62156
	380C2F1	16793	57943	122620	16793	64280	-125476
	380C2F2	16793	57887	122630	16793	63566	-124928
	380C2F3	16793	57817	122644	16793	62698	-124311
	RTG	5103	17227	36568	5103	18550	-36954
NL3/1a	GW / opgw	0	0	0	1953	13342	-21945
Wind, 10°C	380C1F1	0	0	0	7195	41579	-70459
Permanent loads yg= 0.9	380C1F2	0	0	0	7195	39785	-68097
Wind angle: 90°	380C1F3	0	0	0	7195	37566	-65223
	380C2F1	14391	83159	140917	14391	83159	-140917
	380C2F2	14390	79571	136195	14390	79571	-136195
	380C2F3	14390	75132	130445	14390	75132	-130445
	RTG	3900	20689	35823	3900	20689	-35823
NL3/1b	GW / opgw	0	0	0	1952	8846	-16921
Wind, -20°C	380C1F1	0	0	0	7189	31482	-61763
Permanent loads yg= 0.9	380C1F2	0	0	0	7189	31123	-61449
Wind angle: 90°	380C1F3	0	0	0	7189	30687	-61093
	380C2F1	14379	62965	123525	14379	62965	-123525
	380C2F2	14378	62246	122898	14378	62246	-122898
	380C2F3	14378	61374	122186	14378	61374	-122186
	RTG	3898	16324	32380	3898	16324	-32380
NL3/3	GW / opgw	0	0	0	3721	21176	-34877
Wind, -5°C	380C1F1	0	0	0	8747	43469	-77146
Permanent loads yg= 0.9	380C1F2	0	0	0	8747	42102	-75490
Wind angle: 90°	380C1F3	0	0	0	8746	40429	-73522
	380C2F1	17494	86937	154291	17494	86937	-154291
	380C2F2	17493	84203	150981	17493	84203	-150981
	380C2F3	17493	80858	147044	17493	80858	-147044
	RTG	7442	34079	59623	7442	34079	-59623

NL3/4	GW / opgw	0	0	0	2554	9743	-18844
Construction/maintenance, +5°C	380C1F1	0	0	0	8397	31826	-62496
Permanent loads yg= 0.9	380C1F2	0	0	0	8397	31504	-62262
Wind angle: 90°	380C1F3	0	0	0	8397	31111	-62000
	380C2F1	16793	63651	124991	16793	63651	-124991
	380C2F2	16793	63008	124524	16793	63008	-124524
	380C2F3	16793	62223	124001	16793	62223	-124001
	RTG	5103	18422	36878	5103	18422	-36878
NL3/1a	GW / opgw	0	0	0	1953	7161	-14408
Wind, 10°C	380C1F1	0	0	0	7193	25909	-52899
Permanent loads yg= 0.9	380C1F2	0	0	0	7193	25789	-52854
Wind angle: -45°	380C1F3	0	0	0	7193	25642	-52805
	380C2F1	14392	86607	145504	14386	51819	-105799
	380C2F2	14391	82689	140296	14386	51579	-105707
	380C2F3	14390	77827	133922	14386	51284	-105610
	RTG	3900	21457	36828	3900	13898	-28588
NL3/1b	GW / opgw	0	0	0	1952	7608	-16024
Wind, -20°C	380C1F1	0	0	0	7189	28374	-60030
Permanent loads yg= 0.9	380C1F2	0	0	0	7189	28346	-60033
Wind angle: -45°	380C1F3	0	0	0	7189	28309	-60038
	380C2F1	14379	63668	124170	14378	56749	-120060
	380C2F2	14379	62870	123440	14378	56691	-120066
	380C2F3	14378	61901	122609	14378	56619	-120076
	RTG	3898	16474	32504	3898	14981	-31754
NL3/3	GW / opgw	0	0	0	3719	12755	-25855
Wind, -5°C	380C1F1	0	0	0	8745	31828	-65967
Permanent loads yg= 0.9	380C1F2	0	0	0	8745	31735	-65949
Wind angle: -45°	380C1F3	0	0	0	8745	31620	-65933
	380C2F1	17494	89590	157566	17490	63656	-131934
	380C2F2	17494	86578	153852	17490	63470	-131899
	380C2F3	17493	82884	149412	17490	63240	-131865
	RTG	7443	35116	60836	7441	24887	-51454
NL3/4	GW / opgw	0	0	0	2554	8675	-18311
Construction/maintenance, +5°C	380C1F1	0	0	0	8396	28972	-61310
Permanent loads yg= 0.9	380C1F2	0	0	0	8396	28944	-61315
Wind angle: -45°	380C1F3	0	0	0	8396	28908	-61322
	380C2F1	16793	64280	125476	16793	57943	-122620
	380C2F2	16793	63566	124928	16793	57887	-122630
	380C2F3	16793	62698	124311	16793	57817	-122644
	RTG	5103	18550	36954	5103	17227	-36568

ZWW4HL450

Loadcases for tower strength (Special limit state)

		Ahead			Back		
Loadcase according to 50341-3-15	Att. Point	Vertical [N]	Transversal [N]	Longitudinal [N]	Vertical [N]	Transversal [N]	Longitudinal [N]
NL3/1a	GW / opgw	2604	9311	18517	2604	9311	-18517
Wind, 10°C	380C1F1	9593	33418	67599	9593	33418	-67599
Permanent loads yg= 1.2	380C1F2	9593	33231	67520	9593	33231	-67520
Wind angle: 0°	380C1F3	9593	33001	67437	9593	33001	-67437
	380C2F1	0	0	0	19186	66837	-135197
	380C2F2	0	0	0	19186	66463	-135041
	380C2F3	0	0	0	19186	66003	-134874
	RTG	0	0	0	5200	17971	-36681
NL3/1b	GW / opgw	2603	9665	20282	2603	9665	-20282
Wind, -20°C	380C1F1	9588	35764	75445	9588	35764	-75445
Permanent loads yg= 1.2	380C1F2	9588	35720	75449	9588	35720	-75449
Wind angle: 0°	380C1F3	9588	35664	75456	9588	35664	-75456
	380C2F1	0	0	0	19175	71528	-150891
	380C2F2	0	0	0	19175	71439	-150899
	380C2F3	0	0	0	19175	71328	-150912
	RTG	0	0	0	5198	19034	-40248
NL3/3	GW / opgw	4371	14849	29555	4371	14849	-29555
Wind, -5°C	380C1F1	11145	39104	80365	11145	39104	-80365
Permanent loads yg= 1.2	380C1F2	11145	38958	80328	11145	38958	-80328
Wind angle: 0°	380C1F3	11145	38777	80292	11145	38777	-80292
	380C2F1	0	0	0	22290	78209	-160729
	380C2F2	0	0	0	22290	77916	-160657
	380C2F3	0	0	0	22290	77554	-160585
	RTG	0	0	0	8742	28711	-58644
NL3/4	GW / opgw	3206	10537	22151	3206	10537	-22151
Construction/maintenance, +5°C	380C1F1	10797	35804	75530	10797	35804	-75530
Permanent loads yg= 1.2	380C1F2	10797	35761	75537	10797	35761	-75537
Wind angle: 0°	380C1F3	10796	35706	75546	10796	35706	-75546
	380C2F1	0	0	0	21593	71608	-151061
	380C2F2	0	0	0	21593	71521	-151073
	380C2F3	0	0	0	21593	71413	-151092
	RTG	0	0	0	6404	20903	-44254
NL3/1a	GW / opgw	2604	9007	18365	2605	14990	-24978
Wind, 10°C	380C1F1	9593	32643	67338	9596	47673	-82119
Permanent loads yg= 1.2	380C1F2	9593	32534	67317	9595	45940	-80001
Wind angle: 45°	380C1F3	9593	32400	67297	9595	43811	-77461
	380C2F1	0	0	0	19192	95346	-164238
	380C2F2	0	0	0	19191	91880	-160002
	380C2F3	0	0	0	19190	87622	-154922
	RTG	0	0	0	5201	24138	-42576
NL3/1b	GW / opgw	2603	9595	20284	2603	10791	-20938
Wind, -20°C	380C1F1	9588	35575	75471	9588	38618	-76632
Permanent loads yg= 1.2	380C1F2	9588	35547	75477	9588	38279	-76397
Wind angle: 45°	380C1F3	9588	35512	75485	9588	37866	-76134
	380C2F1	0	0	0	19176	77236	-153263
	380C2F2	0	0	0	19176	76559	-152793
	380C2F3	0	0	0	19176	75733	-152269
	RTG	0	0	0	5198	20279	-40663
NL3/3	GW / opgw	4371	14397	29375	4373	23024	-38048
Wind, -5°C	380C1F1	11145	38492	80258	11147	49876	-89677
Permanent loads yg= 1.2	380C1F2	11145	38405	80253	11147	48552	-88211
Wind angle: 45°	380C1F3	11145	38297	80252	11146	46937	-86488
	380C2F1	0	0	0	22294	99752	-179353
	380C2F2	0	0	0	22294	97105	-176421
	380C2F3	0	0	0	22293	93874	-172976
	RTG	0	0	0	8745	37611	-66184
NL3/4	GW / opgw	3206	10470	22161	3206	11551	-22566
Construction/maintenance, +5°C	380C1F1	10796	35619	75565	10797	38497	-76368
Permanent loads yg= 1.2	380C1F2	10796	35592	75572	10797	38183	-76186
Wind angle: 45°	380C1F3	10796	35557	75581	10797	37799	-75986
	380C2F1	0	0	0	21594	76993	-152736
	380C2F2	0	0	0	21593	76365	-152373
	380C2F3	0	0	0	21593	75598	-151972
	RTG	0	0	0	6404	22051	-44461
NL3/1a	GW / opgw	2605	14398	24209	2605	14398	-24209
Wind, 10°C	380C1F1	9595	46147	80252	9595	46147	-80252
Permanent loads yg= 1.2	380C1F2	9595	44572	78360	9595	44572	-78360
Wind angle: 90°	380C1F3	9595	42641	76103	9595	42641	-76103
	380C2F1	0	0	0	19191	92294	-160503
	380C2F2	0	0	0	19190	89144	-156719
	380C2F3	0	0	0	19189	85281	-152205
	RTG	0	0	0	5201	23469	-41783

NL3/1b	GW / opgw	2603	10671	20833	2603	10671	-20833
Wind, -20°C	380C1F1	9588	38320	76424	9588	38320	-76424
Permanent loads yg= 1.2	380C1F2	9588	38014	76225	9588	38014	-76225
Wind angle: 90°	380C1F3	9588	37640	76003	9588	37640	-76003
	380C2F1	0	0	0	19176	76639	-152848
	380C2F2	0	0	0	19176	76027	-152449
	380C2F3	0	0	0	19176	75281	-152007
	RTG	0	0	0	5198	20150	-40585
NL3/3	GW / opgw	4373	22176	37021	4373	22176	-37021
Wind, -5°C	380C1F1	11147	48710	88383	11147	48710	-88383
Permanent loads yg= 1.2	380C1F2	11147	47513	87093	11147	47513	-87093
Wind angle: 90°	380C1F3	11146	46054	85584	11146	46054	-85584
	380C2F1	0	0	0	22294	97420	-176766
	380C2F2	0	0	0	22293	95026	-174186
	380C2F3	0	0	0	22292	92109	-171168
	RTG	0	0	0	8744	36656	-65146
NL3/4	GW / opgw	3206	11445	22493	3206	11445	-22493
Construction/maintenance, +5°C	380C1F1	10797	38220	76207	10797	38220	-76207
Permanent loads yg= 1.2	380C1F2	10797	37936	76055	10797	37936	-76055
Wind angle: 90°	380C1F3	10797	37588	75888	10797	37588	-75888
	380C2F1	0	0	0	21594	76440	-152414
	380C2F2	0	0	0	21593	75872	-152109
	380C2F3	0	0	0	21593	75175	-151775
	RTG	0	0	0	6404	21936	-44412
NL3/1a	GW / opgw	2605	14990	24978	2604	9007	-18365
Wind, 10°C	380C1F1	9596	47673	82119	9593	32643	-67338
Permanent loads yg= 1.2	380C1F2	9595	45940	80001	9593	32534	-67317
Wind angle: -45°	380C1F3	9595	43811	77461	9593	32400	-67297
	380C2F1	0	0	0	19186	65285	-134676
	380C2F2	0	0	0	19186	65068	-134634
	380C2F3	0	0	0	19186	64800	-134594
	RTG	0	0	0	5200	17631	-36594
NL3/1b	GW / opgw	2603	10791	20938	2603	9595	-20284
Wind, -20°C	380C1F1	9588	38618	76632	9588	35575	-75471
Permanent loads yg= 1.2	380C1F2	9588	38279	76397	9588	35547	-75477
Wind angle: -45°	380C1F3	9588	37866	76134	9588	35512	-75485
	380C2F1	0	0	0	19175	71149	-150942
	380C2F2	0	0	0	19175	71094	-150953
	380C2F3	0	0	0	19175	71025	-150969
	RTG	0	0	0	5198	18949	-40263
NL3/3	GW / opgw	4373	23024	38048	4371	14397	-29375
Wind, -5°C	380C1F1	11147	49876	89677	11145	38492	-80258
Permanent loads yg= 1.2	380C1F2	11147	48552	88211	11145	38405	-80253
Wind angle: -45°	380C1F3	11146	46937	86488	11145	38297	-80252
	380C2F1	0	0	0	22290	76984	-160516
	380C2F2	0	0	0	22290	76811	-160506
	380C2F3	0	0	0	22290	76594	-160504
	RTG	0	0	0	8742	28200	-58558
NL3/4	GW / opgw	3206	11551	22566	3206	10470	-22161
Construction/maintenance, +5°C	380C1F1	10797	38497	76368	10796	35619	-75565
Permanent loads yg= 1.2	380C1F2	10797	38183	76186	10796	35592	-75572
Wind angle: -45°	380C1F3	10797	37799	75986	10796	35557	-75581
	380C2F1	0	0	0	21593	71237	-151130
	380C2F2	0	0	0	21593	71183	-151143
	380C2F3	0	0	0	21593	71115	-151161
	RTG	0	0	0	6404	20820	-44274
NL3/1a	GW / opgw	1953	7510	14656	1953	7510	-14656
Wind, 10°C	380C1F1	7193	26783	53370	7193	26783	-53370
Permanent loads yg= 0.9	380C1F2	7193	26570	53236	7193	26570	-53236
Wind angle: 0°	380C1F3	7193	26310	53089	7193	26310	-53089
	380C2F1	0	0	0	14387	53566	-106740
	380C2F2	0	0	0	14386	53141	-106473
	380C2F3	0	0	0	14386	52621	-106177
	RTG	0	0	0	3900	14276	-28757
NL3/1b	GW / opgw	1952	7684	16032	1952	7684	-16032
Wind, -20°C	380C1F1	7189	28574	60027	7189	28574	-60027
Permanent loads yg= 0.9	380C1F2	7189	28527	60025	7189	28527	-60025
Wind angle: 0°	380C1F3	7189	28468	60025	7189	28468	-60025
	380C2F1	0	0	0	14378	57149	-120055
	380C2F2	0	0	0	14378	57054	-120051
	380C2F3	0	0	0	14378	56936	-120050
	RTG	0	0	0	3898	15071	-31748

NL3/3	GW / opgw	3719	13241	26105	3719	13241	-26105
Wind, -5°C	380C1F1	8745	32493	66188	8745	32493	-66188
Permanent loads yg= 0.9	380C1F2	8745	32333	66121	8745	32333	-66121
Wind angle: 0°	380C1F3	8745	32136	66050	8745	32136	-66050
	380C2F1	0	0	0	17490	64986	-132375
	380C2F2	0	0	0	17490	64666	-132242
	380C2F3	0	0	0	17490	64272	-132101
	RTG	0	0	0	7441	25426	-51599
NL3/4	GW / opgw	2554	8745	18308	2554	8745	-18308
Construction/maintenance, +5°C	380C1F1	8396	29164	61291	8396	29164	-61291
Permanent loads yg= 0.9	380C1F2	8396	29119	61294	8396	29119	-61294
Wind angle: 0°	380C1F3	8396	29062	61298	8396	29062	-61298
	380C2F1	0	0	0	16793	58328	-122583
	380C2F2	0	0	0	16793	58238	-122587
	380C2F3	0	0	0	16793	58124	-122596
	RTG	0	0	0	5103	17311	-36553
NL3/1a	GW / opgw	1953	7161	14408	1954	13991	-22837
Wind, 10°C	380C1F1	7193	25909	52899	7196	43304	-72752
Permanent loads yg= 0.9	380C1F2	7193	25789	52854	7195	41344	-70148
Wind angle: 45°	380C1F3	7193	25642	52805	7195	38913	-66961
	380C2F1	0	0	0	14392	86607	-145504
	380C2F2	0	0	0	14391	82689	-140296
	380C2F3	0	0	0	14390	77827	-133922
	RTG	0	0	0	3900	21457	-36828
NL3/1b	GW / opgw	1952	7608	16024	1952	8989	-17075
Wind, -20°C	380C1F1	7189	28374	60030	7189	31834	-62085
Permanent loads yg= 0.9	380C1F2	7189	28346	60033	7189	31435	-61720
Wind angle: 45°	380C1F3	7189	28309	60038	7189	30951	-61305
	380C2F1	0	0	0	14379	63668	-124170
	380C2F2	0	0	0	14379	62870	-123440
	380C2F3	0	0	0	14378	61901	-122609
	RTG	0	0	0	3898	16474	-32504
NL3/3	GW / opgw	3719	12755	25855	3721	22075	-36015
Wind, -5°C	380C1F1	8745	31828	65967	8747	44795	-78783
Permanent loads yg= 0.9	380C1F2	8745	31735	65949	8747	43289	-76926
Wind angle: 45°	380C1F3	8745	31620	65933	8747	41442	-74706
	380C2F1	0	0	0	17494	89590	-157566
	380C2F2	0	0	0	17494	86578	-153852
	380C2F3	0	0	0	17493	82884	-149412
	RTG	0	0	0	7443	35116	-60836
NL3/4	GW / opgw	2554	8675	18311	2554	9863	-18946
Construction/maintenance, +5°C	380C1F1	8396	28972	61310	8397	32140	-62738
Permanent loads yg= 0.9	380C1F2	8396	28944	61315	8397	31783	-62464
Wind angle: 45°	380C1F3	8396	28908	61322	8397	31349	-62156
	380C2F1	0	0	0	16793	64280	-125476
	380C2F2	0	0	0	16793	63566	-124928
	380C2F3	0	0	0	16793	62698	-124311
	RTG	0	0	0	5103	18550	-36954
NL3/1a	GW / opgw	1953	13342	21945	1953	13342	-21945
Wind, 10°C	380C1F1	7195	41579	70459	7195	41579	-70459
Permanent loads yg= 0.9	380C1F2	7195	39785	68097	7195	39785	-68097
Wind angle: 90°	380C1F3	7195	37566	65223	7195	37566	-65223
	380C2F1	0	0	0	14391	83159	-140917
	380C2F2	0	0	0	14390	79571	-136195
	380C2F3	0	0	0	14390	75132	-130445
	RTG	0	0	0	3900	20689	-35823
NL3/1b	GW / opgw	1952	8846	16921	1952	8846	-16921
Wind, -20°C	380C1F1	7189	31482	61763	7189	31482	-61763
Permanent loads yg= 0.9	380C1F2	7189	31123	61449	7189	31123	-61449
Wind angle: 90°	380C1F3	7189	30687	61093	7189	30687	-61093
	380C2F1	0	0	0	14379	62965	-123525
	380C2F2	0	0	0	14378	62246	-122898
	380C2F3	0	0	0	14378	61374	-122186
	RTG	0	0	0	3898	16324	-32380
NL3/3	GW / opgw	3721	21176	34877	3721	21176	-34877
Wind, -5°C	380C1F1	8747	43469	77146	8747	43469	-77146
Permanent loads yg= 0.9	380C1F2	8747	42102	75490	8747	42102	-75490
Wind angle: 90°	380C1F3	8746	40429	73522	8746	40429	-73522
	380C2F1	0	0	0	17494	86937	-154291
	380C2F2	0	0	0	17493	84203	-150981
	380C2F3	0	0	0	17493	80858	-147044
	RTG	0	0	0	7442	34079	-59623

NL3/4	GW / opgw	2554	9743	18844	2554	9743	-18844
Construction/maintenance, +5°C	380C1F1	8397	31826	62496	8397	31826	-62496
Permanent loads yg= 0.9	380C1F2	8397	31504	62262	8397	31504	-62262
Wind angle: 90°	380C1F3	8397	31111	62000	8397	31111	-62000
	380C2F1	0	0	0	16793	63651	-124991
	380C2F2	0	0	0	16793	63008	-124524
	380C2F3	0	0	0	16793	62223	-124001
	RTG	0	0	0	5103	18422	-36878
NL3/1a	GW / opgw	1954	13991	22837	1953	7161	-14408
Wind, 10°C	380C1F1	7196	43304	72752	7193	25909	-52899
Permanent loads yg= 0.9	380C1F2	7195	41344	70148	7193	25789	-52854
Wind angle: -45°	380C1F3	7195	38913	66961	7193	25642	-52805
	380C2F1	0	0	0	14386	51819	-105799
	380C2F2	0	0	0	14386	51579	-105707
	380C2F3	0	0	0	14386	51284	-105610
	RTG	0	0	0	3900	13898	-28588
NL3/1b	GW / opgw	1952	8989	17075	1952	7608	-16024
Wind, -20°C	380C1F1	7189	31834	62085	7189	28374	-60030
Permanent loads yg= 0.9	380C1F2	7189	31435	61720	7189	28346	-60033
Wind angle: -45°	380C1F3	7189	30951	61305	7189	28309	-60038
	380C2F1	0	0	0	14378	56749	-120060
	380C2F2	0	0	0	14378	56691	-120066
	380C2F3	0	0	0	14378	56619	-120076
	RTG	0	0	0	3898	14981	-31754
NL3/3	GW / opgw	3721	22075	36015	3719	12755	-25855
Wind, -5°C	380C1F1	8747	44795	78783	8745	31828	-65967
Permanent loads yg= 0.9	380C1F2	8747	43289	76926	8745	31735	-65949
Wind angle: -45°	380C1F3	8747	41442	74706	8745	31620	-65933
	380C2F1	0	0	0	17490	63656	-131934
	380C2F2	0	0	0	17490	63470	-131899
	380C2F3	0	0	0	17490	63240	-131865
	RTG	0	0	0	7441	24887	-51454
NL3/4	GW / opgw	2554	9863	18946	2554	8675	-18311
Construction/maintenance, +5°C	380C1F1	8397	32140	62738	8396	28972	-61310
Permanent loads yg= 0.9	380C1F2	8397	31783	62464	8396	28944	-61315
Wind angle: -45°	380C1F3	8397	31349	62156	8396	28908	-61322
	380C2F1	0	0	0	16793	57943	-122620
	380C2F2	0	0	0	16793	57887	-122630
	380C2F3	0	0	0	16793	57817	-122644
	RTG	0	0	0	5103	17227	-36568

ZWW4HL450

Loadcases for tower strength (Special limit state)

		Ahead			Back		
Loadcase according to 50341-3-15	Att. Point	Vertical [N]	Transversal [N]	Longitudinal [N]	Vertical [N]	Transversal [N]	Longitudinal [N]
NL3/1a	GW / opgw	2604	9311	18517	0	0	0
Wind, 10°C	380C1F1	9593	33418	67599	0	0	0
Permanent loads yg= 1.2	380C1F2	9593	33231	67520	0	0	0
Wind angle: 0°	380C1F3	9593	33001	67437	0	0	0
	380C2F1	19186	66837	135197	19186	66837	-135197
	380C2F2	19186	66463	135041	19186	66463	-135041
	380C2F3	19186	66003	134874	19186	66003	-134874
	RTG	0	0	0	5200	17971	-36681
NL3/1b	GW / opgw	2603	9665	20282	0	0	0
Wind, -20°C	380C1F1	9588	35764	75445	0	0	0
Permanent loads yg= 1.2	380C1F2	9588	35720	75449	0	0	0
Wind angle: 0°	380C1F3	9588	35664	75456	0	0	0
	380C2F1	19175	71528	150891	19175	71528	-150891
	380C2F2	19175	71439	150899	19175	71439	-150899
	380C2F3	19175	71328	150912	19175	71328	-150912
	RTG	0	0	0	5198	19034	-40248
NL3/3	GW / opgw	4371	14849	29555	0	0	0
Wind, -5°C	380C1F1	11145	39104	80365	0	0	0
Permanent loads yg= 1.2	380C1F2	11145	38958	80328	0	0	0
Wind angle: 0°	380C1F3	11145	38777	80292	0	0	0
	380C2F1	22290	78209	160729	22290	78209	-160729
	380C2F2	22290	77916	160657	22290	77916	-160657
	380C2F3	22290	77554	160585	22290	77554	-160585
	RTG	0	0	0	8742	28711	-58644
NL3/4	GW / opgw	3206	10537	22151	0	0	0
Construction/maintenance, +5°C	380C1F1	10797	35804	75530	0	0	0
Permanent loads yg= 1.2	380C1F2	10797	35761	75537	0	0	0
Wind angle: 0°	380C1F3	10796	35706	75546	0	0	0
	380C2F1	21593	71608	151061	21593	71608	-151061
	380C2F2	21593	71521	151073	21593	71521	-151073
	380C2F3	21593	71413	151092	21593	71413	-151092
	RTG	0	0	0	6404	20903	-44254
NL3/1a	GW / opgw	2604	9007	18365	0	0	0
Wind, 10°C	380C1F1	9593	32643	67338	0	0	0
Permanent loads yg= 1.2	380C1F2	9593	32534	67317	0	0	0
Wind angle: 45°	380C1F3	9593	32400	67297	0	0	0
	380C2F1	19186	65285	134676	19192	95346	-164238
	380C2F2	19186	65068	134634	19191	91880	-160002
	380C2F3	19186	64800	134594	19190	87622	-154922
	RTG	0	0	0	5201	24138	-42576
NL3/1b	GW / opgw	2603	9595	20284	0	0	0
Wind, -20°C	380C1F1	9588	35575	75471	0	0	0
Permanent loads yg= 1.2	380C1F2	9588	35547	75477	0	0	0
Wind angle: 45°	380C1F3	9588	35512	75485	0	0	0
	380C2F1	19175	71149	150942	19176	77236	-153263
	380C2F2	19175	71094	150953	19176	76559	-152793
	380C2F3	19175	71025	150969	19176	75733	-152269
	RTG	0	0	0	5198	20279	-40663
NL3/3	GW / opgw	4371	14397	29375	0	0	0
Wind, -5°C	380C1F1	11145	38492	80258	0	0	0
Permanent loads yg= 1.2	380C1F2	11145	38405	80253	0	0	0
Wind angle: 45°	380C1F3	11145	38297	80252	0	0	0
	380C2F1	22290	76984	160516	22294	99752	-179353
	380C2F2	22290	76811	160506	22294	97105	-176421
	380C2F3	22290	76594	160504	22293	93874	-172976
	RTG	0	0	0	8745	37611	-66184
NL3/4	GW / opgw	3206	10470	22161	0	0	0
Construction/maintenance, +5°C	380C1F1	10796	35619	75565	0	0	0
Permanent loads yg= 1.2	380C1F2	10796	35592	75572	0	0	0
Wind angle: 45°	380C1F3	10796	35557	75581	0	0	0
	380C2F1	21593	71237	151130	21594	76993	-152736
	380C2F2	21593	71183	151143	21593	76365	-152373
	380C2F3	21593	71115	151161	21593	75598	-151972
	RTG	0	0	0	6404	22051	-44461
NL3/1a	GW / opgw	2605	14398	24209	0	0	0
Wind, 10°C	380C1F1	9595	46147	80252	0	0	0
Permanent loads yg= 1.2	380C1F2	9595	44572	78360	0	0	0
Wind angle: 90°	380C1F3	9595	42641	76103	0	0	0
	380C2F1	19191	92294	160503	19191	92294	-160503
	380C2F2	19190	89144	156719	19190	89144	-156719
	380C2F3	19189	85281	152205	19189	85281	-152205
	RTG	0	0	0	5201	23469	-41783

NL3/1b	GW / opgw	2603	10671	20833	0	0	0
Wind, -20°C	380C1F1	9588	38320	76424	0	0	0
Permanent loads yg= 1.2	380C1F2	9588	38014	76225	0	0	0
Wind angle: 90°	380C1F3	9588	37640	76003	0	0	0
	380C2F1	19176	76639	152848	19176	76639	-152848
	380C2F2	19176	76027	152449	19176	76027	-152449
	380C2F3	19176	75281	152007	19176	75281	-152007
	RTG	0	0	0	5198	20150	-40585
NL3/3	GW / opgw	4373	22176	37021	0	0	0
Wind, -5°C	380C1F1	11147	48710	88383	0	0	0
Permanent loads yg= 1.2	380C1F2	11147	47513	87093	0	0	0
Wind angle: 90°	380C1F3	11146	46054	85584	0	0	0
	380C2F1	22294	97420	176766	22294	97420	-176766
	380C2F2	22293	95026	174186	22293	95026	-174186
	380C2F3	22292	92109	171168	22292	92109	-171168
	RTG	0	0	0	8744	36656	-65146
NL3/4	GW / opgw	3206	11445	22493	0	0	0
Construction/maintenance, +5°C	380C1F1	10797	38220	76207	0	0	0
Permanent loads yg= 1.2	380C1F2	10797	37936	76055	0	0	0
Wind angle: 90°	380C1F3	10797	37588	75888	0	0	0
	380C2F1	21594	76440	152414	21594	76440	-152414
	380C2F2	21593	75872	152109	21593	75872	-152109
	380C2F3	21593	75175	151775	21593	75175	-151775
	RTG	0	0	0	6404	21936	-44412
NL3/1a	GW / opgw	2605	14990	24978	0	0	0
Wind, 10°C	380C1F1	9596	47673	82119	0	0	0
Permanent loads yg= 1.2	380C1F2	9595	45940	80001	0	0	0
Wind angle: -45°	380C1F3	9595	43811	77461	0	0	0
	380C2F1	19192	95346	164238	19186	65285	-134676
	380C2F2	19191	91880	160002	19186	65068	-134634
	380C2F3	19190	87622	154922	19186	64800	-134594
	RTG	0	0	0	5200	17631	-36594
NL3/1b	GW / opgw	2603	10791	20938	0	0	0
Wind, -20°C	380C1F1	9588	38618	76632	0	0	0
Permanent loads yg= 1.2	380C1F2	9588	38279	76397	0	0	0
Wind angle: -45°	380C1F3	9588	37866	76134	0	0	0
	380C2F1	19176	77236	153263	19175	71149	-150942
	380C2F2	19176	76559	152793	19175	71094	-150953
	380C2F3	19176	75733	152269	19175	71025	-150969
	RTG	0	0	0	5198	18949	-40263
NL3/3	GW / opgw	4373	23024	38048	0	0	0
Wind, -5°C	380C1F1	11147	49876	89677	0	0	0
Permanent loads yg= 1.2	380C1F2	11147	48552	88211	0	0	0
Wind angle: -45°	380C1F3	11146	46937	86488	0	0	0
	380C2F1	22294	99752	179353	22290	76984	-160516
	380C2F2	22294	97105	176421	22290	76811	-160506
	380C2F3	22293	93874	172976	22290	76594	-160504
	RTG	0	0	0	8742	28200	-58558
NL3/4	GW / opgw	3206	11551	22566	0	0	0
Construction/maintenance, +5°C	380C1F1	10797	38497	76368	0	0	0
Permanent loads yg= 1.2	380C1F2	10797	38183	76186	0	0	0
Wind angle: -45°	380C1F3	10797	37799	75986	0	0	0
	380C2F1	21594	76993	152736	21593	71237	-151130
	380C2F2	21593	76365	152373	21593	71183	-151143
	380C2F3	21593	75598	151972	21593	71115	-151161
	RTG	0	0	0	6404	20820	-44274
NL3/1a	GW / opgw	1953	7510	14656	0	0	0
Wind, 10°C	380C1F1	7193	26783	53370	0	0	0
Permanent loads yg= 0.9	380C1F2	7193	26570	53236	0	0	0
Wind angle: 0°	380C1F3	7193	26310	53089	0	0	0
	380C2F1	14387	53566	106740	14387	53566	-106740
	380C2F2	14386	53141	106473	14386	53141	-106473
	380C2F3	14386	52621	106177	14386	52621	-106177
	RTG	0	0	0	3900	14276	-28757
NL3/1b	GW / opgw	1952	7684	16032	0	0	0
Wind, -20°C	380C1F1	7189	28574	60027	0	0	0
Permanent loads yg= 0.9	380C1F2	7189	28527	60025	0	0	0
Wind angle: 0°	380C1F3	7189	28468	60025	0	0	0
	380C2F1	14378	57149	120055	14378	57149	-120055
	380C2F2	14378	57054	120051	14378	57054	-120051
	380C2F3	14378	56936	120050	14378	56936	-120050
	RTG	0	0	0	3898	15071	-31748

NL3/3	GW / opgw	3719	13241	26105	0	0	0
Wind, -5°C	380C1F1	8745	32493	66188	0	0	0
Permanent loads yg= 0.9	380C1F2	8745	32333	66121	0	0	0
Wind angle: 0°	380C1F3	8745	32136	66050	0	0	0
	380C2F1	17490	64986	132375	17490	64986	-132375
	380C2F2	17490	64666	132242	17490	64666	-132242
	380C2F3	17490	64272	132101	17490	64272	-132101
	RTG	0	0	0	7441	25426	-51599
NL3/4	GW / opgw	2554	8745	18308	0	0	0
Construction/maintenance, +5°C	380C1F1	8396	29164	61291	0	0	0
Permanent loads yg= 0.9	380C1F2	8396	29119	61294	0	0	0
Wind angle: 0°	380C1F3	8396	29062	61298	0	0	0
	380C2F1	16793	58328	122583	16793	58328	-122583
	380C2F2	16793	58238	122587	16793	58238	-122587
	380C2F3	16793	58124	122596	16793	58124	-122596
	RTG	0	0	0	5103	17311	-36553
NL3/1a	GW / opgw	1953	7161	14408	0	0	0
Wind, 10°C	380C1F1	7193	25909	52899	0	0	0
Permanent loads yg= 0.9	380C1F2	7193	25789	52854	0	0	0
Wind angle: 45°	380C1F3	7193	25642	52805	0	0	0
	380C2F1	14386	51819	105799	14392	86607	-145504
	380C2F2	14386	51579	105707	14391	82689	-140296
	380C2F3	14386	51284	105610	14390	77827	-133922
	RTG	0	0	0	3900	21457	-36828
NL3/1b	GW / opgw	1952	7608	16024	0	0	0
Wind, -20°C	380C1F1	7189	28374	60030	0	0	0
Permanent loads yg= 0.9	380C1F2	7189	28346	60033	0	0	0
Wind angle: 45°	380C1F3	7189	28309	60038	0	0	0
	380C2F1	14378	56749	120060	14379	63668	-124170
	380C2F2	14378	56691	120066	14379	62870	-123440
	380C2F3	14378	56619	120076	14378	61901	-122609
	RTG	0	0	0	3898	16474	-32504
NL3/3	GW / opgw	3719	12755	25855	0	0	0
Wind, -5°C	380C1F1	8745	31828	65967	0	0	0
Permanent loads yg= 0.9	380C1F2	8745	31735	65949	0	0	0
Wind angle: 45°	380C1F3	8745	31620	65933	0	0	0
	380C2F1	17490	63656	131934	17494	89590	-157566
	380C2F2	17490	63470	131899	17494	86578	-153852
	380C2F3	17490	63240	131865	17493	82884	-149412
	RTG	0	0	0	7443	35116	-60836
NL3/4	GW / opgw	2554	8675	18311	0	0	0
Construction/maintenance, +5°C	380C1F1	8396	28972	61310	0	0	0
Permanent loads yg= 0.9	380C1F2	8396	28944	61315	0	0	0
Wind angle: 45°	380C1F3	8396	28908	61322	0	0	0
	380C2F1	16793	57943	122620	16793	64280	-125476
	380C2F2	16793	57887	122630	16793	63566	-124928
	380C2F3	16793	57817	122644	16793	62698	-124311
	RTG	0	0	0	5103	18550	-36954
NL3/1a	GW / opgw	1953	13342	21945	0	0	0
Wind, 10°C	380C1F1	7195	41579	70459	0	0	0
Permanent loads yg= 0.9	380C1F2	7195	39785	68097	0	0	0
Wind angle: 90°	380C1F3	7195	37566	65223	0	0	0
	380C2F1	14391	83159	140917	14391	83159	-140917
	380C2F2	14390	79571	136195	14390	79571	-136195
	380C2F3	14390	75132	130445	14390	75132	-130445
	RTG	0	0	0	3900	20689	-35823
NL3/1b	GW / opgw	1952	8846	16921	0	0	0
Wind, -20°C	380C1F1	7189	31482	61763	0	0	0
Permanent loads yg= 0.9	380C1F2	7189	31123	61449	0	0	0
Wind angle: 90°	380C1F3	7189	30687	61093	0	0	0
	380C2F1	14379	62965	123525	14379	62965	-123525
	380C2F2	14378	62246	122898	14378	62246	-122898
	380C2F3	14378	61374	122186	14378	61374	-122186
	RTG	0	0	0	3898	16324	-32380
NL3/3	GW / opgw	3721	21176	34877	0	0	0
Wind, -5°C	380C1F1	8747	43469	77146	0	0	0
Permanent loads yg= 0.9	380C1F2	8747	42102	75490	0	0	0
Wind angle: 90°	380C1F3	8746	40429	73522	0	0	0
	380C2F1	17494	86937	154291	17494	86937	-154291
	380C2F2	17493	84203	150981	17493	84203	-150981
	380C2F3	17493	80858	147044	17493	80858	-147044
	RTG	0	0	0	7442	34079	-59623

NL3/4	GW / opgw	2554	9743	18844	0	0	0
Construction/maintenance, +5°C	380C1F1	8397	31826	62496	0	0	0
Permanent loads yg= 0.9	380C1F2	8397	31504	62262	0	0	0
Wind angle: 90°	380C1F3	8397	31111	62000	0	0	0
	380C2F1	16793	63651	124991	16793	63651	-124991
	380C2F2	16793	63008	124524	16793	63008	-124524
	380C2F3	16793	62223	124001	16793	62223	-124001
	RTG	0	0	0	5103	18422	-36878
NL3/1a	GW / opgw	1954	13991	22837	0	0	0
Wind, 10°C	380C1F1	7196	43304	72752	0	0	0
Permanent loads yg= 0.9	380C1F2	7195	41344	70148	0	0	0
Wind angle: -45°	380C1F3	7195	38913	66961	0	0	0
	380C2F1	14392	86607	145504	14386	51819	-105799
	380C2F2	14391	82689	140296	14386	51579	-105707
	380C2F3	14390	77827	133922	14386	51284	-105610
	RTG	0	0	0	3900	13898	-28588
NL3/1b	GW / opgw	1952	8989	17075	0	0	0
Wind, -20°C	380C1F1	7189	31834	62085	0	0	0
Permanent loads yg= 0.9	380C1F2	7189	31435	61720	0	0	0
Wind angle: -45°	380C1F3	7189	30951	61305	0	0	0
	380C2F1	14379	63668	124170	14378	56749	-120060
	380C2F2	14379	62870	123440	14378	56691	-120066
	380C2F3	14378	61901	122609	14378	56619	-120076
	RTG	0	0	0	3898	14981	-31754
NL3/3	GW / opgw	3721	22075	36015	0	0	0
Wind, -5°C	380C1F1	8747	44795	78783	0	0	0
Permanent loads yg= 0.9	380C1F2	8747	43289	76926	0	0	0
Wind angle: -45°	380C1F3	8747	41442	74706	0	0	0
	380C2F1	17494	89590	157566	17490	63656	-131934
	380C2F2	17494	86578	153852	17490	63470	-131899
	380C2F3	17493	82884	149412	17490	63240	-131865
	RTG	0	0	0	7441	24887	-51454
NL3/4	GW / opgw	2554	9863	18946	0	0	0
Construction/maintenance, +5°C	380C1F1	8397	32140	62738	0	0	0
Permanent loads yg= 0.9	380C1F2	8397	31783	62464	0	0	0
Wind angle: -45°	380C1F3	8397	31349	62156	0	0	0
	380C2F1	16793	64280	125476	16793	57943	-122620
	380C2F2	16793	63566	124928	16793	57887	-122630
	380C2F3	16793	62698	124311	16793	57817	-122644
	RTG	0	0	0	5103	17227	-36568

ZWW4HL450

Loadcases for tower strength (Special limit state)

		Ahead			Back		
Loadcase according to 50341-3-15	Att. Point	Vertical [N]	Transversal [N]	Longitudinal [N]	Vertical [N]	Transversal [N]	Longitudinal [N]
NL3/1a	GW / opgw	2604	9311	18517	2604	9311	-18517
Wind, 10°C	380C1F1	9593	33418	67599	9593	33418	-67599
Permanent loads yg= 1.2	380C1F2	9593	33231	67520	9593	33231	-67520
Wind angle: 0°	380C1F3	9593	33001	67437	9593	33001	-67437
	380C2F1	19186	66837	135197	19186	66837	-135197
	380C2F2	19186	66463	135041	19186	66463	-135041
	380C2F3	19186	66003	134874	19186	66003	-134874
	RTG	0	0	0	5200	17971	-36681
NL3/1b	GW / opgw	2603	9665	20282	2603	9665	-20282
Wind, -20°C	380C1F1	9588	35764	75445	9588	35764	-75445
Permanent loads yg= 1.2	380C1F2	9588	35720	75449	9588	35720	-75449
Wind angle: 0°	380C1F3	9588	35664	75456	9588	35664	-75456
	380C2F1	19175	71528	150891	19175	71528	-150891
	380C2F2	19175	71439	150899	19175	71439	-150899
	380C2F3	19175	71328	150912	19175	71328	-150912
	RTG	0	0	0	5198	19034	-40248
NL3/3	GW / opgw	4371	14849	29555	4371	14849	-29555
Wind, -5°C	380C1F1	11145	39104	80365	11145	39104	-80365
Permanent loads yg= 1.2	380C1F2	11145	38958	80328	11145	38958	-80328
Wind angle: 0°	380C1F3	11145	38777	80292	11145	38777	-80292
	380C2F1	22290	78209	160729	22290	78209	-160729
	380C2F2	22290	77916	160657	22290	77916	-160657
	380C2F3	22290	77554	160585	22290	77554	-160585
	RTG	0	0	0	8742	28711	-58644
NL3/4	GW / opgw	3206	10537	22151	3206	10537	-22151
Construction/maintenance, +5°C	380C1F1	10797	35804	75530	10797	35804	-75530
Permanent loads yg= 1.2	380C1F2	10797	35761	75537	10797	35761	-75537
Wind angle: 0°	380C1F3	10796	35706	75546	10796	35706	-75546
	380C2F1	21593	71608	151061	21593	71608	-151061
	380C2F2	21593	71521	151073	21593	71521	-151073
	380C2F3	21593	71413	151092	21593	71413	-151092
	RTG	0	0	0	6404	20903	-44254
NL3/1a	GW / opgw	2604	9007	18365	2605	14990	-24978
Wind, 10°C	380C1F1	9593	32643	67338	9596	47673	-82119
Permanent loads yg= 1.2	380C1F2	9593	32534	67317	9595	45940	-80001
Wind angle: 45°	380C1F3	9593	32400	67297	9595	43811	-77461
	380C2F1	19186	65285	134676	19192	95346	-164238
	380C2F2	19186	65068	134634	19191	91880	-160002
	380C2F3	19186	64800	134594	19190	87622	-154922
	RTG	0	0	0	5201	24138	-42576
NL3/1b	GW / opgw	2603	9595	20284	2603	10791	-20938
Wind, -20°C	380C1F1	9588	35575	75471	9588	38618	-76632
Permanent loads yg= 1.2	380C1F2	9588	35547	75477	9588	38279	-76397
Wind angle: 45°	380C1F3	9588	35512	75485	9588	37866	-76134
	380C2F1	19175	71149	150942	19176	77236	-153263
	380C2F2	19175	71094	150953	19176	76559	-152793
	380C2F3	19175	71025	150969	19176	75733	-152269
	RTG	0	0	0	5198	20279	-40663
NL3/3	GW / opgw	4371	14397	29375	4373	23024	-38048
Wind, -5°C	380C1F1	11145	38492	80258	11147	49876	-89677
Permanent loads yg= 1.2	380C1F2	11145	38405	80253	11147	48552	-88211
Wind angle: 45°	380C1F3	11145	38297	80252	11146	46937	-86488
	380C2F1	22290	76984	160516	22294	99752	-179353
	380C2F2	22290	76811	160506	22294	97105	-176421
	380C2F3	22290	76594	160504	22293	93874	-172976
	RTG	0	0	0	8745	37611	-66184
NL3/4	GW / opgw	3206	10470	22161	3206	11551	-22566
Construction/maintenance, +5°C	380C1F1	10796	35619	75565	10797	38497	-76368
Permanent loads yg= 1.2	380C1F2	10796	35592	75572	10797	38183	-76186
Wind angle: 45°	380C1F3	10796	35557	75581	10797	37799	-75986
	380C2F1	21593	71237	151130	21594	76993	-152736
	380C2F2	21593	71183	151143	21593	76365	-152373
	380C2F3	21593	71115	151161	21593	75598	-151972
	RTG	0	0	0	6404	22051	-44461
NL3/1a	GW / opgw	2605	14398	24209	2605	14398	-24209
Wind, 10°C	380C1F1	9595	46147	80252	9595	46147	-80252
Permanent loads yg= 1.2	380C1F2	9595	44572	78360	9595	44572	-78360
Wind angle: 90°	380C1F3	9595	42641	76103	9595	42641	-76103
	380C2F1	19191	92294	160503	19191	92294	-160503
	380C2F2	19190	89144	156719	19190	89144	-156719
	380C2F3	19189	85281	152205	19189	85281	-152205
	RTG	0	0	0	5201	23469	-41783

NL3/1b	GW / opgw	2603	10671	20833	2603	10671	-20833
Wind, -20°C	380C1F1	9588	38320	76424	9588	38320	-76424
Permanent loads yg= 1.2	380C1F2	9588	38014	76225	9588	38014	-76225
Wind angle: 90°	380C1F3	9588	37640	76003	9588	37640	-76003
	380C2F1	19176	76639	152848	19176	76639	-152848
	380C2F2	19176	76027	152449	19176	76027	-152449
	380C2F3	19176	75281	152007	19176	75281	-152007
	RTG	0	0	0	5198	20150	-40585
NL3/3	GW / opgw	4373	22176	37021	4373	22176	-37021
Wind, -5°C	380C1F1	11147	48710	88383	11147	48710	-88383
Permanent loads yg= 1.2	380C1F2	11147	47513	87093	11147	47513	-87093
Wind angle: 90°	380C1F3	11146	46054	85584	11146	46054	-85584
	380C2F1	22294	97420	176766	22294	97420	-176766
	380C2F2	22293	95026	174186	22293	95026	-174186
	380C2F3	22292	92109	171168	22292	92109	-171168
	RTG	0	0	0	8744	36656	-65146
NL3/4	GW / opgw	3206	11445	22493	3206	11445	-22493
Construction/maintenance, +5°C	380C1F1	10797	38220	76207	10797	38220	-76207
Permanent loads yg= 1.2	380C1F2	10797	37936	76055	10797	37936	-76055
Wind angle: 90°	380C1F3	10797	37588	75888	10797	37588	-75888
	380C2F1	21594	76440	152414	21594	76440	-152414
	380C2F2	21593	75872	152109	21593	75872	-152109
	380C2F3	21593	75175	151775	21593	75175	-151775
	RTG	0	0	0	6404	21936	-44412
NL3/1a	GW / opgw	2605	14990	24978	2604	9007	-18365
Wind, 10°C	380C1F1	9596	47673	82119	9593	32643	-67338
Permanent loads yg= 1.2	380C1F2	9595	45940	80001	9593	32534	-67317
Wind angle: -45°	380C1F3	9595	43811	77461	9593	32400	-67297
	380C2F1	19192	95346	164238	19186	65285	-134676
	380C2F2	19191	91880	160002	19186	65068	-134634
	380C2F3	19190	87622	154922	19186	64800	-134594
	RTG	0	0	0	5200	17631	-36594
NL3/1b	GW / opgw	2603	10791	20938	2603	9595	-20284
Wind, -20°C	380C1F1	9588	38618	76632	9588	35575	-75471
Permanent loads yg= 1.2	380C1F2	9588	38279	76397	9588	35547	-75477
Wind angle: -45°	380C1F3	9588	37866	76134	9588	35512	-75485
	380C2F1	19176	77236	153263	19175	71149	-150942
	380C2F2	19176	76559	152793	19175	71094	-150953
	380C2F3	19176	75733	152269	19175	71025	-150969
	RTG	0	0	0	5198	18949	-40263
NL3/3	GW / opgw	4373	23024	38048	4371	14397	-29375
Wind, -5°C	380C1F1	11147	49876	89677	11145	38492	-80258
Permanent loads yg= 1.2	380C1F2	11147	48552	88211	11145	38405	-80253
Wind angle: -45°	380C1F3	11146	46937	86488	11145	38297	-80252
	380C2F1	22294	99752	179353	22290	76984	-160516
	380C2F2	22294	97105	176421	22290	76811	-160506
	380C2F3	22293	93874	172976	22290	76594	-160504
	RTG	0	0	0	8742	28200	-58558
NL3/4	GW / opgw	3206	11551	22566	3206	10470	-22161
Construction/maintenance, +5°C	380C1F1	10797	38497	76368	10796	35619	-75565
Permanent loads yg= 1.2	380C1F2	10797	38183	76186	10796	35592	-75572
Wind angle: -45°	380C1F3	10797	37799	75986	10796	35557	-75581
	380C2F1	21594	76993	152736	21593	71237	-151130
	380C2F2	21593	76365	152373	21593	71183	-151143
	380C2F3	21593	75598	151972	21593	71115	-151161
	RTG	0	0	0	6404	20820	-44274
NL3/1a	GW / opgw	1953	7510	14656	1953	7510	-14656
Wind, 10°C	380C1F1	7193	26783	53370	7193	26783	-53370
Permanent loads yg= 0.9	380C1F2	7193	26570	53236	7193	26570	-53236
Wind angle: 0°	380C1F3	7193	26310	53089	7193	26310	-53089
	380C2F1	14387	53566	106740	14387	53566	-106740
	380C2F2	14386	53141	106473	14386	53141	-106473
	380C2F3	14386	52621	106177	14386	52621	-106177
	RTG	0	0	0	3900	14276	-28757
NL3/1b	GW / opgw	1952	7684	16032	1952	7684	-16032
Wind, -20°C	380C1F1	7189	28574	60027	7189	28574	-60027
Permanent loads yg= 0.9	380C1F2	7189	28527	60025	7189	28527	-60025
Wind angle: 0°	380C1F3	7189	28468	60025	7189	28468	-60025
	380C2F1	14378	57149	120055	14378	57149	-120055
	380C2F2	14378	57054	120051	14378	57054	-120051
	380C2F3	14378	56936	120050	14378	56936	-120050
	RTG	0	0	0	3898	15071	-31748

NL3/3	GW / opgw	3719	13241	26105	3719	13241	-26105
Wind, -5°C	380C1F1	8745	32493	66188	8745	32493	-66188
Permanent loads yg= 0.9	380C1F2	8745	32333	66121	8745	32333	-66121
Wind angle: 0°	380C1F3	8745	32136	66050	8745	32136	-66050
	380C2F1	17490	64986	132375	17490	64986	-132375
	380C2F2	17490	64666	132242	17490	64666	-132242
	380C2F3	17490	64272	132101	17490	64272	-132101
	RTG	0	0	0	7441	25426	-51599
NL3/4	GW / opgw	2554	8745	18308	2554	8745	-18308
Construction/maintenance, +5°C	380C1F1	8396	29164	61291	8396	29164	-61291
Permanent loads yg= 0.9	380C1F2	8396	29119	61294	8396	29119	-61294
Wind angle: 0°	380C1F3	8396	29062	61298	8396	29062	-61298
	380C2F1	16793	58328	122583	16793	58328	-122583
	380C2F2	16793	58238	122587	16793	58238	-122587
	380C2F3	16793	58124	122596	16793	58124	-122596
	RTG	0	0	0	5103	17311	-36553
NL3/1a	GW / opgw	1953	7161	14408	1954	13991	-22837
Wind, 10°C	380C1F1	7193	25909	52899	7196	43304	-72752
Permanent loads yg= 0.9	380C1F2	7193	25789	52854	7195	41344	-70148
Wind angle: 45°	380C1F3	7193	25642	52805	7195	38913	-66961
	380C2F1	14386	51819	105799	14392	86607	-145504
	380C2F2	14386	51579	105707	14391	82689	-140296
	380C2F3	14386	51284	105610	14390	77827	-133922
	RTG	0	0	0	3900	21457	-36828
NL3/1b	GW / opgw	1952	7608	16024	1952	8989	-17075
Wind, -20°C	380C1F1	7189	28374	60030	7189	31834	-62085
Permanent loads yg= 0.9	380C1F2	7189	28346	60033	7189	31435	-61720
Wind angle: 45°	380C1F3	7189	28309	60038	7189	30951	-61305
	380C2F1	14378	56749	120060	14379	63668	-124170
	380C2F2	14378	56691	120066	14379	62870	-123440
	380C2F3	14378	56619	120076	14378	61901	-122609
	RTG	0	0	0	3898	16474	-32504
NL3/3	GW / opgw	3719	12755	25855	3721	22075	-36015
Wind, -5°C	380C1F1	8745	31828	65967	8747	44795	-78783
Permanent loads yg= 0.9	380C1F2	8745	31735	65949	8747	43289	-76926
Wind angle: 45°	380C1F3	8745	31620	65933	8747	41442	-74706
	380C2F1	17490	63656	131934	17494	89590	-157566
	380C2F2	17490	63470	131899	17494	86578	-153852
	380C2F3	17490	63240	131865	17493	82884	-149412
	RTG	0	0	0	7443	35116	-60836
NL3/4	GW / opgw	2554	8675	18311	2554	9863	-18946
Construction/maintenance, +5°C	380C1F1	8396	28972	61310	8397	32140	-62738
Permanent loads yg= 0.9	380C1F2	8396	28944	61315	8397	31783	-62464
Wind angle: 45°	380C1F3	8396	28908	61322	8397	31349	-62156
	380C2F1	16793	57943	122620	16793	64280	-125476
	380C2F2	16793	57887	122630	16793	63566	-124928
	380C2F3	16793	57817	122644	16793	62698	-124311
	RTG	0	0	0	5103	18550	-36954
NL3/1a	GW / opgw	1953	13342	21945	1953	13342	-21945
Wind, 10°C	380C1F1	7195	41579	70459	7195	41579	-70459
Permanent loads yg= 0.9	380C1F2	7195	39785	68097	7195	39785	-68097
Wind angle: 90°	380C1F3	7195	37566	65223	7195	37566	-65223
	380C2F1	14391	83159	140917	14391	83159	-140917
	380C2F2	14390	79571	136195	14390	79571	-136195
	380C2F3	14390	75132	130445	14390	75132	-130445
	RTG	0	0	0	3900	20689	-35823
NL3/1b	GW / opgw	1952	8846	16921	1952	8846	-16921
Wind, -20°C	380C1F1	7189	31482	61763	7189	31482	-61763
Permanent loads yg= 0.9	380C1F2	7189	31123	61449	7189	31123	-61449
Wind angle: 90°	380C1F3	7189	30687	61093	7189	30687	-61093
	380C2F1	14379	62965	123525	14379	62965	-123525
	380C2F2	14378	62246	122898	14378	62246	-122898
	380C2F3	14378	61374	122186	14378	61374	-122186
	RTG	0	0	0	3898	16324	-32380
NL3/3	GW / opgw	3721	21176	34877	3721	21176	-34877
Wind, -5°C	380C1F1	8747	43469	77146	8747	43469	-77146
Permanent loads yg= 0.9	380C1F2	8747	42102	75490	8747	42102	-75490
Wind angle: 90°	380C1F3	8746	40429	73522	8746	40429	-73522
	380C2F1	17494	86937	154291	17494	86937	-154291
	380C2F2	17493	84203	150981	17493	84203	-150981
	380C2F3	17493	80858	147044	17493	80858	-147044
	RTG	0	0	0	7442	34079	-59623

NL3/4	GW / opgw	2554	9743	18844	2554	9743	-18844
Construction/maintenance, +5°C	380C1F1	8397	31826	62496	8397	31826	-62496
Permanent loads yg= 0.9	380C1F2	8397	31504	62262	8397	31504	-62262
Wind angle: 90°	380C1F3	8397	31111	62000	8397	31111	-62000
	380C2F1	16793	63651	124991	16793	63651	-124991
	380C2F2	16793	63008	124524	16793	63008	-124524
	380C2F3	16793	62223	124001	16793	62223	-124001
	RTG	0	0	0	5103	18422	-36878
NL3/1a	GW / opgw	1954	13991	22837	1953	7161	-14408
Wind, 10°C	380C1F1	7196	43304	72752	7193	25909	-52899
Permanent loads yg= 0.9	380C1F2	7195	41344	70148	7193	25789	-52854
Wind angle: -45°	380C1F3	7195	38913	66961	7193	25642	-52805
	380C2F1	14392	86607	145504	14386	51819	-105799
	380C2F2	14391	82689	140296	14386	51579	-105707
	380C2F3	14390	77827	133922	14386	51284	-105610
	RTG	0	0	0	3900	13898	-28588
NL3/1b	GW / opgw	1952	8989	17075	1952	7608	-16024
Wind, -20°C	380C1F1	7189	31834	62085	7189	28374	-60030
Permanent loads yg= 0.9	380C1F2	7189	31435	61720	7189	28346	-60033
Wind angle: -45°	380C1F3	7189	30951	61305	7189	28309	-60038
	380C2F1	14379	63668	124170	14378	56749	-120060
	380C2F2	14379	62870	123440	14378	56691	-120066
	380C2F3	14378	61901	122609	14378	56619	-120076
	RTG	0	0	0	3898	14981	-31754
NL3/3	GW / opgw	3721	22075	36015	3719	12755	-25855
Wind, -5°C	380C1F1	8747	44795	78783	8745	31828	-65967
Permanent loads yg= 0.9	380C1F2	8747	43289	76926	8745	31735	-65949
Wind angle: -45°	380C1F3	8747	41442	74706	8745	31620	-65933
	380C2F1	17494	89590	157566	17490	63656	-131934
	380C2F2	17494	86578	153852	17490	63470	-131899
	380C2F3	17493	82884	149412	17490	63240	-131865
	RTG	0	0	0	7441	24887	-51454
NL3/4	GW / opgw	2554	9863	18946	2554	8675	-18311
Construction/maintenance, +5°C	380C1F1	8397	32140	62738	8396	28972	-61310
Permanent loads yg= 0.9	380C1F2	8397	31783	62464	8396	28944	-61315
Wind angle: -45°	380C1F3	8397	31349	62156	8396	28908	-61322
	380C2F1	16793	64280	125476	16793	57943	-122620
	380C2F2	16793	63566	124928	16793	57887	-122630
	380C2F3	16793	62698	124311	16793	57817	-122644
	RTG	0	0	0	5103	17227	-36568

ZWW4HL450

Loadcases for tower strength (serviceability limit state)

		Ahead			Back		
Loadcase according to 50341-3-15	Att. Point	Vertical [N]	Transversal [N]	Longitudinal [N]	Vertical [N]	Transversal [N]	Longitudinal [N]
NL4/1a	GW / opgw	2170	8427	16214	2170	8427	-16214
Wind, 10°C	380C1F1	7993	29803	58698	7993	29803	-58698
Permanent loads yg= 1.0	380C1F2	7993	29517	58499	7993	29517	-58499
Wind angle: 0°	380C1F3	7993	29168	58276	7993	29168	-58276
	380C2F1	15986	59606	117397	15986	59606	-117397
	380C2F2	15986	59034	116998	15986	59034	-116998
	380C2F3	15986	58336	116552	15986	58336	-116552
	RTG	0	0	0	4333	15860	-31631
NL4/1b	GW / opgw	2169	8324	17480	2169	8324	-17480
Wind, -20°C	380C1F1	7988	30940	65308	7988	30940	-65308
Permanent loads yg= 1.0	380C1F2	7988	30903	65311	7988	30903	-65311
Wind angle: 0°	380C1F3	7988	30856	65316	7988	30856	-65316
	380C2F1	15977	61880	130617	15977	61880	-130617
	380C2F2	15977	61805	130622	15977	61805	-130622
	380C2F3	15977	61712	130632	15977	61712	-130632
	RTG	0	0	0	4331	16382	-34655
NL4/3	GW / opgw	7433	21583	44374	7433	21583	-44374
Wind, -5°C	380C1F1	12617	42689	88634	12617	42689	-88634
Permanent loads yg= 1.0	380C1F2	12617	42577	88624	12617	42577	-88624
Wind angle: 0°	380C1F3	12617	42437	88618	12617	42437	-88618
	380C2F1	25235	85378	177268	25235	85378	-177268
	380C2F2	25235	85153	177249	25235	85153	-177249
	380C2F3	25235	84874	177236	25235	84874	-177236
	RTG	0	0	0	14884	42550	-88807
NL4/4	GW / opgw	2671	9040	19014	2671	9040	-19014
Construction/maintenance, +5°C	380C1F1	8996	30768	64940	8996	30768	-64940
Permanent loads yg= 1.0	380C1F2	8996	30732	64945	8996	30732	-64945
Wind angle: 0°	380C1F3	8996	30687	64952	8996	30687	-64952
	380C2F1	17991	61537	129881	17991	61537	-129881
	380C2F2	17991	61464	129890	17991	61464	-129890
	380C2F3	17991	61373	129905	17991	61373	-129905
	RTG	0	0	0	5336	17928	-37970
NL4/1a	GW / opgw	2170	7957	15848	2171	16893	-27037
Wind, 10°C	380C1F1	7993	28632	57986	7997	51615	-84897
Permanent loads yg= 1.0	380C1F2	7993	28472	57915	7996	49089	-81529
Wind angle: 45°	380C1F3	7993	28276	57838	7996	45935	-77364
	380C2F1	15986	57264	115972	15994	103230	-169795
	380C2F2	15986	56944	115829	15993	98178	-163058
	380C2F3	15986	56551	115675	15992	91869	-154727
	RTG	0	0	0	4335	25423	-42739
NL4/1b	GW / opgw	2169	8265	17482	2169	9281	-18068
Wind, -20°C	380C1F1	7988	30781	65327	7989	33361	-66390
Permanent loads yg= 1.0	380C1F2	7988	30758	65332	7989	33072	-66179
Wind angle: 45°	380C1F3	7988	30729	65338	7989	32720	-65944
	380C2F1	15977	61562	130655	15977	66722	-132779
	380C2F2	15977	61516	130664	15977	66144	-132359
	380C2F3	15977	61457	130676	15977	65440	-131888
	RTG	0	0	0	4331	17434	-35034
NL4/3	GW / opgw	7433	21277	44378	7434	26483	-47350
Wind, -5°C	380C1F1	12617	42215	88622	12619	50519	-93935
Permanent loads yg= 1.0	380C1F2	12617	42147	88627	12619	49564	-93031
Wind angle: 45°	380C1F3	12617	42061	88636	12618	48402	-91990
	380C2F1	25235	84430	177244	25238	101038	-187870
	380C2F2	25235	84293	177254	25237	99128	-186062
	380C2F3	25235	84122	177273	25237	96804	-183979
	RTG	0	0	0	14885	47970	-90803
NL4/4	GW / opgw	2671	8983	19021	2671	9897	-19387
Construction/maintenance, +5°C	380C1F1	8996	30613	64967	8996	33044	-65707
Permanent loads yg= 1.0	380C1F2	8996	30590	64973	8996	32777	-65545
Wind angle: 45°	380C1F3	8996	30562	64980	8996	32452	-65365
	380C2F1	17991	61226	129935	17992	66087	-131413
	380C2F2	17991	61181	129945	17992	65554	-131089
	380C2F3	17991	61124	129960	17991	64903	-130731
	RTG	0	0	0	5336	18896	-38166
NL4/1a	GW / opgw	2171	16068	25910	2171	16068	-25910
Wind, 10°C	380C1F1	7997	49392	81933	7997	49392	-81933
Permanent loads yg= 1.0	380C1F2	7996	47069	78855	7996	47069	-78855
Wind angle: 90°	380C1F3	7996	44176	75068	7996	44176	-75068
	380C2F1	15993	98785	163865	15993	98785	-163865
	380C2F2	15992	94137	157710	15992	94137	-157710
	380C2F3	15991	88352	150136	15991	88352	-150136
	RTG	0	0	0	4334	24420	-41412

NL4/1b	GW / opgw	2169	9178	17975	2169	9178	-17975
Wind, -20°C	380C1F1	7989	33106	66204	7989	33106	-66204
Permanent loads yg= 1.0	380C1F2	7989	32846	66025	7989	32846	-66025
Wind angle: 90°	380C1F3	7989	32528	65826	7989	32528	-65826
	380C2F1	15977	66213	132407	15977	66213	-132407
	380C2F2	15977	65691	132050	15977	65691	-132050
	380C2F3	15977	65056	131652	15977	65056	-131652
	RTG	0	0	0	4331	17325	-34964
NL4/3	GW / opgw	7434	25966	46900	7434	25966	-46900
Wind, -5°C	380C1F1	12619	49678	93136	12619	49678	-93136
Permanent loads yg= 1.0	380C1F2	12619	48816	92353	12619	48816	-92353
Wind angle: 90°	380C1F3	12618	47768	91453	12618	47768	-91453
	380C2F1	25237	99355	186273	25237	99355	-186273
	380C2F2	25237	97632	184705	25237	97632	-184705
	380C2F3	25237	95535	182907	25237	95535	-182907
	RTG	0	0	0	14885	47411	-90447
NL4/4	GW / opgw	2671	9807	19323	2671	9807	-19323
Construction/maintenance, +5°C	380C1F1	8996	32809	65563	8996	32809	-65563
Permanent loads yg= 1.0	380C1F2	8996	32568	65427	8996	32568	-65427
Wind angle: 90°	380C1F3	8996	32273	65277	8996	32273	-65277
	380C2F1	17992	65618	131126	17992	65618	-131126
	380C2F2	17991	65136	130854	17991	65136	-130854
	380C2F3	17991	64545	130554	17991	64545	-130554
	RTG	0	0	0	5336	18798	-38122
NL4/1a	GW / opgw	2171	16893	27037	2170	7957	-15848
Wind, 10°C	380C1F1	7997	51615	84897	7993	28632	-57986
Permanent loads yg= 1.0	380C1F2	7996	49089	81529	7993	28472	-57915
Wind angle: -45°	380C1F3	7996	45935	77364	7993	28276	-57838
	380C2F1	15994	103230	169795	15986	57264	-115972
	380C2F2	15993	98178	163058	15986	56944	-115829
	380C2F3	15992	91869	154727	15986	56551	-115675
	RTG	0	0	0	4333	15355	-31369
NL4/1b	GW / opgw	2169	9281	18068	2169	8265	-17482
Wind, -20°C	380C1F1	7989	33361	66390	7988	30781	-65327
Permanent loads yg= 1.0	380C1F2	7989	33072	66179	7988	30758	-65332
Wind angle: -45°	380C1F3	7989	32720	65944	7988	30729	-65338
	380C2F1	15977	66722	132779	15977	61562	-130655
	380C2F2	15977	66144	132359	15977	61516	-130664
	380C2F3	15977	65440	131888	15977	61457	-130676
	RTG	0	0	0	4331	16311	-34666
NL4/3	GW / opgw	7434	26483	47350	7433	21277	-44378
Wind, -5°C	380C1F1	12619	50519	93935	12617	42215	-88622
Permanent loads yg= 1.0	380C1F2	12619	49564	93031	12617	42147	-88627
Wind angle: -45°	380C1F3	12618	48402	91990	12617	42061	-88636
	380C2F1	25238	101038	187870	25235	84430	-177244
	380C2F2	25237	99128	186062	25235	84293	-177254
	380C2F3	25237	96804	183979	25235	84122	-177273
	RTG	0	0	0	14883	42183	-88864
NL4/4	GW / opgw	2671	9897	19387	2671	8983	-19021
Construction/maintenance, +5°C	380C1F1	8996	33044	65707	8996	30613	-64967
Permanent loads yg= 1.0	380C1F2	8996	32777	65545	8996	30590	-64973
Wind angle: -45°	380C1F3	8996	32452	65365	8996	30562	-64980
	380C2F1	17992	66087	131413	17991	61226	-129935
	380C2F2	17992	65554	131089	17991	61181	-129945
	380C2F3	17991	64903	130731	17991	61124	-129960
	RTG	0	0	0	5336	17859	-37987

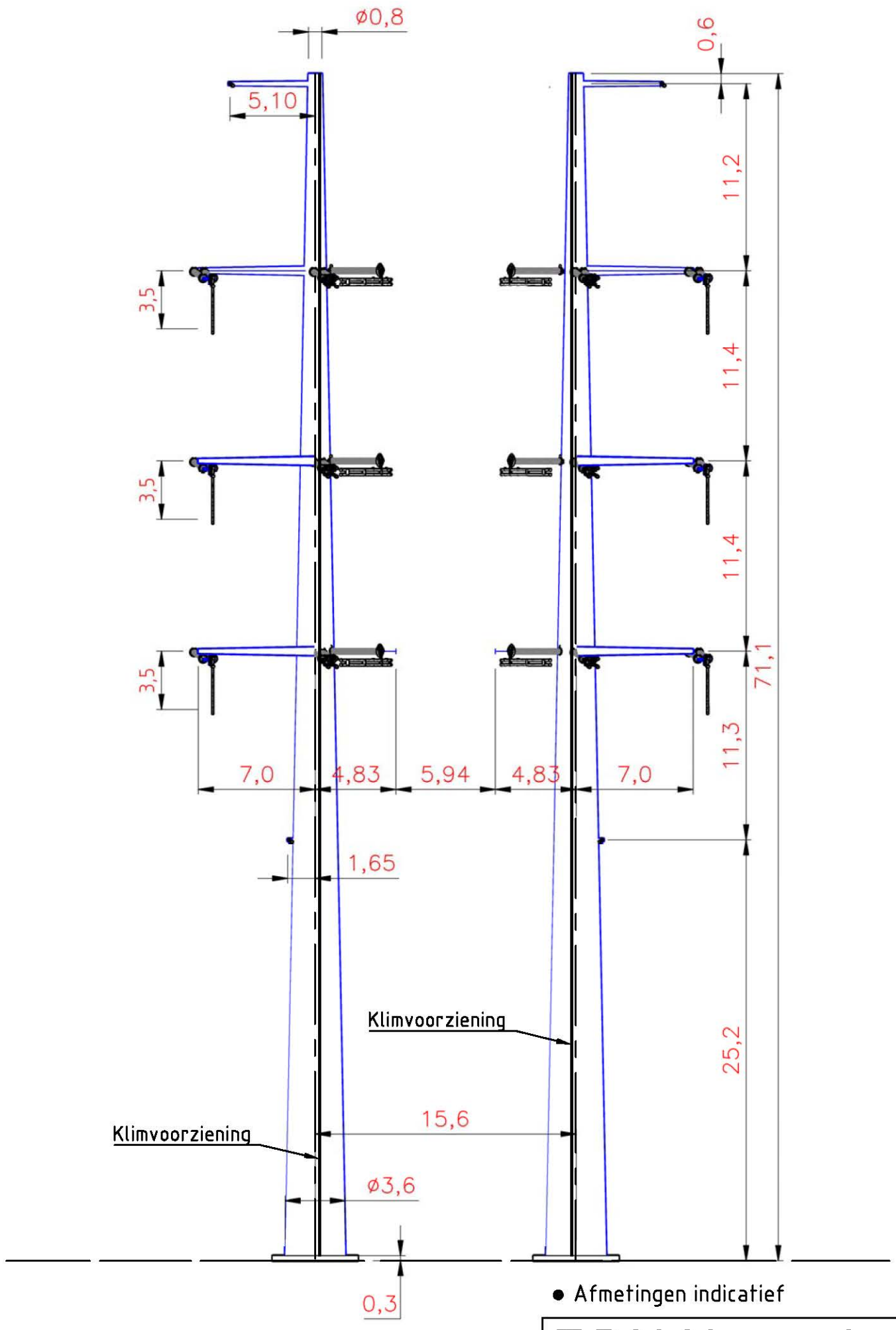

• Afmetingen indicatief

T.B.V. Vergunnings aanvraag

Wintrack
Masttype: ZWW4HL450

- Trekparameter 1800m
- 2x380 / 2x150 Hoekmast
- 450m Veldlengte
- 130°-150° Lijnhoek
- Uitvoering Staal of Beton
- Kleurstelling hoofdelement:
  Ral 9018 Papyrus white
- Kleurstelling Appendages:
  Ral 7021 Black grey

2.0	16-03-2015	Modified botom diameter
1.0	03-02-2013	First edition

KEMA DNV

Projectname: Engineering verbinding ZW380

Third angle projection:

Drawing no.: 74102194-035-112V

Design state: CONCEPT		Scale:	1:300
Drawn by: SGR	16-03-2015	Units:	m
Checked by: AJP	16-03-2015	Project no:	000.145
Approved by: AW	16-03-2015	Company:	TenneT

Description: Wintrack Masttype ZWW4HL450

Revision: 2.0

Format: A3

© 2012 - Filename: 74102194-035-112 - ZWW4HL450_Rev2.0.dwg

ZWW4HK450+5

Fundatie berekening

Bijlage CBT

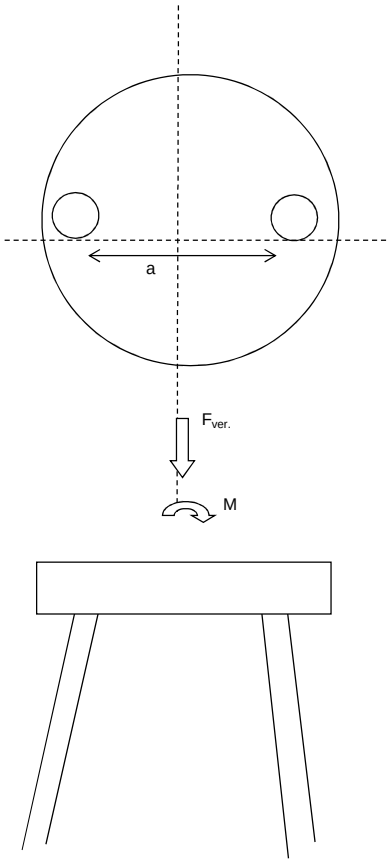

Fundatie ontwerp:
Heipaal

Afmetingen	b	400	mm
	d	400	mm
omtrek paal	$O_{p;gem}$	1,6	m
schoorstand		8	:1
α		7,125	graden
Opstort	Diameter	5,8	m
	Hoogte	1,8	m
	Inhoud	47,6	m^3
	e.g.	1141	kN
Onderplaat	Diameter	14,0	m
	Hoogte	1,4	m
	Inhoud	216	m^3
	e.g.	5172	kN
Hart paal tov rand fund.		0,6	m

Optreden krachten

e.g. mast		1101	kN
Fgeleiders		190	kN
Maximale dwarskracht		1205	kN
Fmax vert (druk)		1511	kN
Fmin vert (trek)		1134	kN
Maximale moment		64458	kNm

Moment

F_{diag}		5379	kN
F_{hor}		1205	kN
F_{ver}		5337	kN
Mhor (tgv Fhor)		3855	kNm
M_{tot}		68313	kNm
F=M/a		5337	kN

reductie door opwaarste kracht water

Verticaal reactiekracht

Fwater (trek)		2631	kN
Fgrond (druk)		3443	kN
Fgrond (trek)		2869	kN
Fdmax (druk)		6610	kN
Ftmax (trek)		3121	kN
Fdtot (druk)		11947	kN
Fttot (trek)		2216	kN
Palen druk		11	(-)
Palen trek		7	(-)
Totaal palen		22	(-)

Per fundering

ZWW4HK450+5

TREKPALEN volgens CUR 2001-4 par. 8.

$$F_{r;trek;d} = \int_0^L O_{p;gem} \times p_{r;z;d} \times dz$$

Bijlage CBT

Bepaling opneembare paalbelasting op druk

heipaal			
Afmeting paal	b	0,40	m
	b	0,40	m
omtrek paal	$O_{p;gem}$	1,60	m
paalfactor	α t	0,007	
aantal palen	M	1	
aantal sonderingen	N	1	
factor invloed aantal sonderingen	ξ	0,75	
conusweerstand over wrijvingstraject	$q_{c;z;max}$	15	MPa
	$q_{c;z;rep}$	11,25	MPa
materiaalfactor	$\gamma_{m;b4}$	1,4	
factor, wisselende belastingen	$\gamma_{m;var;qc}$	1,5	
	$q_{c;z;d}$	5,36	MPa
	$p_{r;z;d}$	37,5	kN/m²
	$F_{r;trek;d;i}$	60,0	kN/m¹
	$F_{trek,d}$	596	kN/m

Bepaling opneembare trekbelasting paal

sondering	diepte		$q_{c;z}$		$P_{r;max;schacht;i}$	$F_{r;trek;d;i}$	$F_{trek,d}$
	m	m	MPa	α t	kPa	kN	kN
	0	-1	0	0,007	0,00	0,00	0
	-1	-2	0	0,007	0,00	0,00	0
	-2	-3	0	0,007	0,00	0,00	0
	-3	-4	0	0,007	0,00	0,00	0
	-4	-5	0	0,007	0,00	0,00	0
	-5	-6	0	0,007	0,00	0,00	0
	-6	-7	0	0,007	0,00	0,00	0
	-7	-8	0	0,007	0,00	0,00	0
	-8	-9	1	0,007	2,50	4,00	4
	-9	-10	3	0,007	7,50	12,00	16
	-10	-11	2	0,007	5,00	8,00	24
	-11	-12	0	0,007	0,00	0,00	24
	-12	-13	3	0,007	7,50	12,00	36
	-13	-14	2	0,007	5,00	8,00	44
	-14	-15	4	0,007	10,00	16,00	60
	-15	-16	10	0,007	25,00	40,00	100
	-16	-17	9	0,007	22,50	36,00	136
	-17	-18	8	0,007	20,00	32,00	168
	-18	-19	12	0,007	30,00	48,00	216
	-19	-20	12	0,007	30,00	48,00	264
	-20	-21	10	0,007	25,00	40,00	304
	-21	-22	11	0,007	27,50	44,00	348
	-22	-23	11	0,007	27,50	44,00	392
	-23	-24	12	0,007	30,00	48,00	440
	-24	-25	12	0,007	30,00	48,00	488
	-25	-26	12	0,007	30,00	48,00	536
	-26	-27	15	0,007	37,50	60,00	596

$F_{trek,d}$	596	kN	paalafmeting	400	mm, paalpuntnivo	-27,00	m

Paalgroep factor	10%	
$F_{trek,d}$	**536,4**	kN

ZWW4HK450+5

DRUKPALEN

FUNDERINGSCONSTRUCTIE
Toelaatbare paalbelastingen

Bijlage CBT

Bepaling opneembare paalbelasting op druk

heipaal			v		
		diameter	a	2	mm
				2	mm
		Deq		0,001808	

maximale puntweerstand

$P_{r;max;punt;i}$		11,25	MN/m²
paalklasse factor	α_p	1,00	
factor paalvoet	β	1	
hoek van inwendige vrijwing van paalvoet	ϕ	40	
factor dwarsdoorsnede paalvoet	s	1,00	
minimale waarde neergaande deel	$q_{c;II;gem}$	9,00	MN/m²
gem. sondeerwaarde neergaande deel	$q_{c;I;gem}$	14,00	MN/m²
gem. sondeerwaarde opgaande deel	$q_{c;III;gem}$	11,00	MN/m²

maximale paalschachtwrijving

$P_{r;max;schacht;i}$		0,05	MN/m²

waarin:

paalfactor	α_s	0,010	
conusweerstand over wrijvingstraject	$q_{c;z;a}$	5,00	MN/m²

maximale draagkracht alleenstaande paal

$\mathbf{F_{r;max;i}}$		0,00	MN

waarin:

$\mathbf{F_{r;max;punt;i}}$		0,00	MN
paalpunt oppervlak	A_{punt}	0,00	m²
$\mathbf{F_{r;max;schacht;i}}$		0,00	MN
gemiddelde paalomtrek	$O_{p;gem}$	0,01	m
lengte schachtwrijving	Δl	15,00	m

Bepaling rekenwaarde van de maximale draagkracht

$F_{r;paal;max;d}$	MN	0,00	MN
materiaalfactor grond	$\gamma_{m;b}$	1,20	
waarde afhankelijk van aantal palen en aantal sonderingen	$\xi_{1;N}$	0,75	

$F_{r;paal;max;d}$	3 kN	mm, paalpuntnivo	-27,00	m

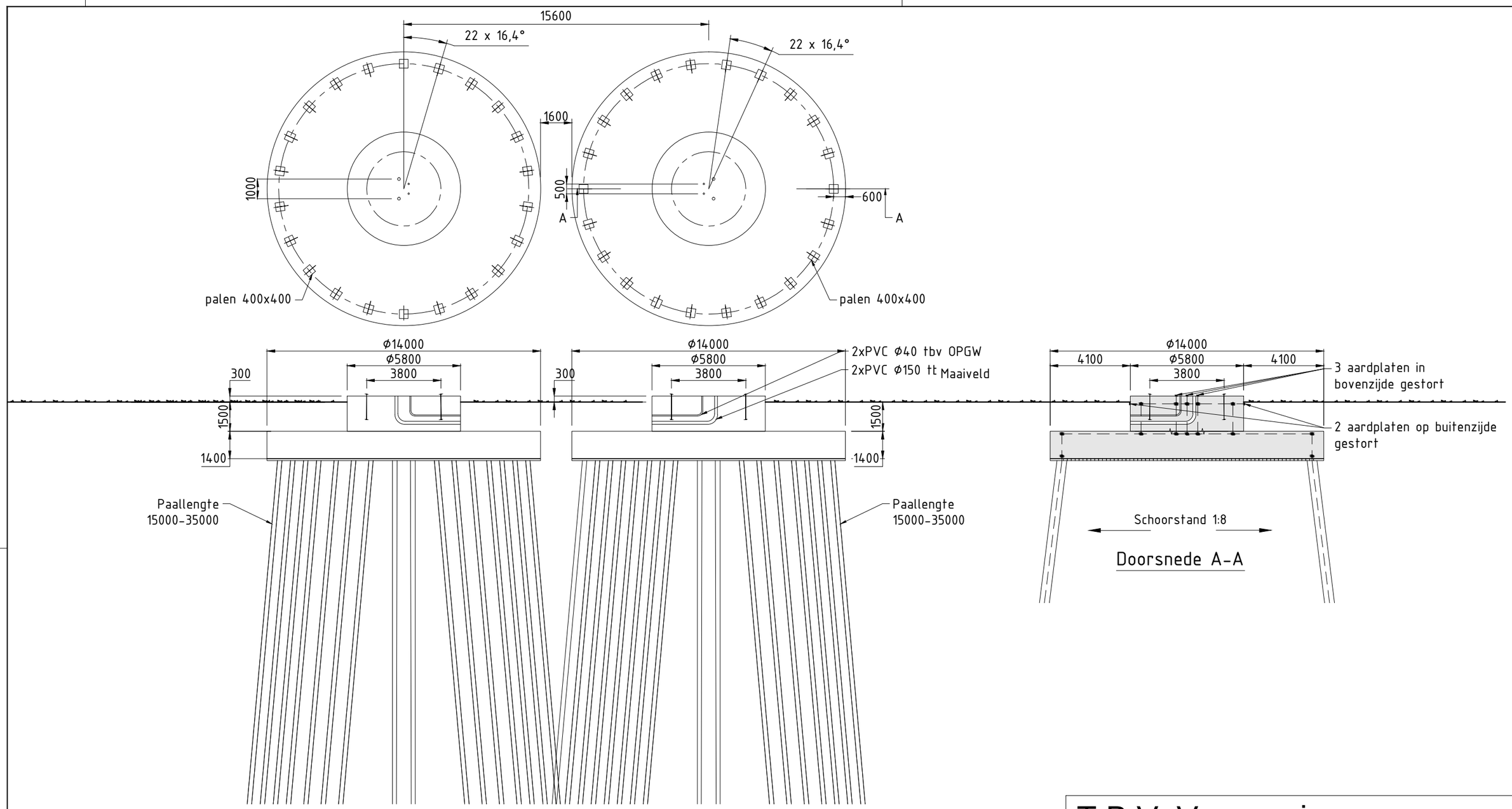

T.B.V. Vergunnings aanvraag

Verklaring

Gewapend beton

Werkvloer

Verklaring aarding

Ringleiding Ø16mm (FeB220) glad

Koppeling met aardstaaf in paal

Aardplaten

Opmerkingen

Maten in mm
Coordinaten in mm, in het stelsel van de rijksdriehoekmeting
Maatvoering in het 360 graden stelsel
Vellingkanten niet getekend
Ringleiding in bovenkant poer op het bovennet
plaatsen in de eerste laag
Mastvoetanker afmeting exclusief mastvoetflens breedte
Afmetingen indicatief

1.0	10-03-2014	Eerste uitgave

KEMA DNV

Projectname: Engineering verbinding ZW380

Third angle projection:

Drawing no.: 74102194-032-114V

Design state: Definitief		Scale: 1:200	
Drawn by: RBE	10-03-2014	Units: mm	
Checked by: AJP	10-03-2014	Project no: 000.145	
Approved by: AW	10-03-2014	Company: TenneT	

Description: Principe ontwerp fundatie hoekmast ZWW4HK450+5 masten familie

Revision: 1.0

Format: A3

DNV KEMA Energy & Sustainability, Utrechtseweg 310, 6812 AR Arnhem, tel: +31 26 3 56 91 11, www.dnvkema.com

© 2013 - Filename: 74102194-032-114 - ZWW4HK450+5 Principe ontwerp fundaties_rev1.0.dwg

ZWW4HK450+5

Bijlage BBT

Location dependent data to obtain pressures

Wind area			2	
Terrain catagory	O=onbebouwd, B=bebouwd		O	
Hoogte		h	76.1	m
Diameter voet		d voet	3.8	m
top		d top	0.8	m
gem		d gem	2.3	m
wanddikte		t	24	mm
Oppervlakte aan voet		A	284704	mm^2
Traagheidsmoment aan voet		W_x	2.67E+08	mm^3
Weerstandsmoment aan voet		I_x	5.01E+11	mm^4
		2de orde	10.0	%
Mast: Gewicht		$F_{rep;ver}$	1017	kN

Ultimate limit state

	hoogte	F_{ver}	$F_{loodrecht}$	$F_{//}$	$F_{Samengesteld}$		
	m	kN	kN	kN	kN		
GW / opgw	75.5	5.4	34.9	0.0	34.9	3457	kNm
150C1F1	64.3	19.9	103.8	0.0	103.8	6715	kNm
150C1F2	52.9	20.0	98.2	0.0	98.2	5419	kNm
150C1F3	41.5	20.0	91.1	0.0	91.1	4151	kNm
380C2F1	64.3	39.8	207.6	0.0	207.6	13430	kNm
380C2F2	52.9	39.9	196.3	0.0	196.3	10837	kNm
380C2F3	41.5	40.0	182.1	0.0	182.1	8303	kNm
RTG	30.2	5.4	25.8	-64.1	69.1	2370	kNm

Stuwdruk	$F_{hor.}$	52.9	kN
	$M_{d;wind}$	1790	kNm
Totaal	$M_{d;tot}$	58598	kNm
Totaal moment incl. 2^{ue} orde effect	$M_{d;tot}$	64458	kNm

Normaalkracht;

Optredende normaalkracht

$N_{d;geleiders}$		190	kN
$N_{d;\ e.g.\ mast}$		1220	kN
$N_{s;d;totaal}$		1411	kN

Is buis plooigevoelig tgv normaalkracht: conform NEN-EN 50341 par. 7.4.5.4 — JA

	r_a	0.56	
	A_{eff}	160401	mm^2

Optredende spanning tgv normaalkracht

$N_{sd}/A_{eff} = f_{yd}/y_{m1}$ — 9 N/mm^2

Moment;

Optredende moment in de voet:

$M_{d;tot}$ — 64458 kNm

Is buis plooigevoelig tgv momentkracht: conform NEN-EN 50341 par. 7.4.5.4 — JA

	r_a	0.86	
	W_{eff}	2.31E+08	mm^3

Optredende spaning tgv moment:

$M_d/W_{eff} = f_{yd}/y_{m1}$ — 280 N/mm^2

Totale spanning:

	s_d	288	N/mm^2
	$s_{d;toegestaan}$	284	N/mm^2

SPANNING TE GROO < 284 N/mm^2 = ACCOORD
==> 80% van 355 N/mm^2

Special limit state

	hoogte	F_{ver}	$F_{loodrecht}$	$F_{//}$	$F_{Samengesteld}$		
	m	kN	kN	kN	kN		
GW / opgw	75.5	4.5	25.1	0.0	25.1	1895	kNm
150C1F1	64.3	16.7	75.6	0.0	75.6	4863	kNm
150C1F2	52.9	16.8	71.8	0.0	71.8	3800	kNm
150C1F3	41.5	16.8	67.0	0.0	67.0	2782	kNm
380C2F1	64.3	33.5	151.3	0.0	151.3	9727	kNm
380C2F2	52.9	33.5	143.7	0.0	143.7	7599	kNm
380C2F3	41.5	33.7	134.1	0.0	134.1	5564	kNm
RTG	30.2	4.6	18.9	-49.0	52.5	1585	kNm

Stuwdruk	$F_{hor.}$	1420	kN		
Verplaating		1.42	m	4.15	EIS TENNET VISUEE
Percentage van de verplaatsing		1.86%		5.5%	NEN-EN-50341
Hoek		2.00	graden		
Kromming		0.43%		1%	NEN-EN-50341
Fundatie rotatiestijfheid		0.005	rad		

ZWW4HK450+5

Loadcases for tower strength (ultimate limit state)

		Ahead			Back		
Loadcase according to 50341-3-15	Att. Point	Vertical [N]	Transversal [N]	Longitudinal [N]	Vertical [N]	Transversal [N]	Longitudinal [N]
NL1/1a	GW / opgw	2827	5737	19685	2827	5737	-19685
Wind, 10°C	150C1F1	10417	20608	72051	10417	20608	-72051
Permanent loads yg= 1.2	150C1F2	10418	20499	72002	10418	20499	-72002
Wind angle: 0°	150C1F3	10419	20363	71948	10419	20363	-71948
	380C2F1	20833	41216	144102	20833	41216	-144102
	380C2F2	20836	40998	144004	20836	40998	-144004
	380C2F3	20838	40726	143896	20838	40726	-143896
	RTG	0	0	0	5649	11104	-39134
NL1/1b	GW / opgw	2853	5891	21642	2853	5891	-21642
Wind, -20°C	150C1F1	10518	21832	80508	10518	21832	-80508
Permanent loads yg= 1.2	150C1F2	10519	21813	80509	10519	21813	-80509
Wind angle: 0°	150C1F3	10519	21790	80512	10519	21790	-80512
	380C2F1	21037	43664	161015	21037	43664	-161015
	380C2F2	21037	43627	161019	21037	43627	-161019
	380C2F3	21037	43580	161024	21037	43580	-161024
	RTG	0	0	0	5695	11631	-42945
NL1/3	GW / opgw	11220	16973	61571	11220	16973	-61571
Wind, -5°C	150C1F1	17888	32084	117023	17888	32084	-117023
Permanent loads yg= 1.2	150C1F2	17889	32031	117025	17889	32031	-117025
Wind angle: 0°	150C1F3	17889	31964	117028	17889	31964	-117028
	380C2F1	35777	64167	234047	35777	64167	-234047
	380C2F2	35777	64061	234050	35777	64061	-234050
	380C2F3	35778	63927	234057	35778	63927	-234057
	RTG	0	0	0	22471	33683	-123342
NL1/4	GW / opgw	3641	6674	24562	3641	6674	-24562
Construction/maintenance, +5°C	150C1F1	12052	22353	82452	12052	22353	-82452
Permanent loads yg= 1.2	150C1F2	12052	22335	82455	12052	22335	-82455
Wind angle: 0°	150C1F3	12052	22311	82458	12052	22311	-82458
	380C2F1	24105	44707	164904	24105	44707	-164904
	380C2F2	24105	44670	164909	24105	44670	-164909
	380C2F3	24105	44623	164916	24105	44623	-164916
	RTG	0	0	0	7274	13270	-49062
NL1/6	GW / opgw	3180	5791	21613	3180	5791	-21613
Permanent, +10°C	150C1F1	11711	21243	79281	11711	21243	-79281
Permanent loads yg= 1.35	150C1F2	11711	21243	79281	11711	21243	-79281
	150C1F3	11711	21243	79281	11711	21243	-79281
	380C2F1	23422	42487	158562	23422	42487	-158562
	380C2F2	23422	42487	158562	23422	42487	-158562
	380C2F3	23422	42487	158562	23422	42487	-158562
	RTG	0	0	0	6351	11571	-43184
NL1/1a	GW / opgw	2790	7671	22187	2698	14755	-35727
Wind, 10°C	150C1F1	10328	25593	77378	10022	44423	-111357
Permanent loads yg= 1.2	150C1F2	10340	25017	76566	10048	42189	-107028
Wind angle: 45°	150C1F3	10354	24308	75614	10084	39377	-101623
	380C2F1	20656	51185	154757	20044	88847	-222715
	380C2F2	20680	50034	153132	20096	84378	-214056
	380C2F3	20709	48616	151227	20168	78753	-203246
	RTG	0	0	0	5460	22207	-57038
NL1/1b	GW / opgw	2851	6163	21712	2833	7100	-22634
Wind, -20°C	150C1F1	10514	22571	80610	10474	25014	-82479
Permanent loads yg= 1.2	150C1F2	10514	22493	80586	10480	24715	-82165
Wind angle: 45°	150C1F3	10515	22395	80559	10487	24346	-81802
	380C2F1	21027	45141	161221	20947	50028	-164958
	380C2F2	21029	44985	161171	20960	49430	-164329
	380C2F3	21030	44789	161117	20974	48691	-163605
	RTG	0	0	0	5676	13107	-43755
NL1/3	GW / opgw	11209	18338	61813	11134	22869	-65471
Wind, -5°C	150C1F1	17870	34222	117585	17734	41575	-124759
Permanent loads yg= 1.2	150C1F2	17873	33992	117474	17753	40668	-123612
Wind angle: 45°	150C1F3	17876	33705	117351	17776	39547	-122270
	380C2F1	35740	68443	235169	35467	83149	-249518
	380C2F2	35745	67984	234948	35506	81336	-247225
	380C2F3	35752	67411	234701	35553	79094	-244541
	RTG	0	0	0	22387	40979	-126451
NL1/4	GW / opgw	3639	6935	24592	3627	7788	-25200
Construction/maintenance, +5°C	150C1F1	12049	23077	82499	12019	25399	-83909
Permanent loads yg= 1.2	150C1F2	12049	23001	82482	12023	25119	-83664
Wind angle: 45°	150C1F3	12050	22906	82465	12029	24771	-83385
	380C2F1	24097	46154	164997	24037	50797	-167818
	380C2F2	24098	46003	164965	24046	50237	-167329
	380C2F3	24100	45812	164931	24057	49543	-166770
	RTG	0	0	0	7261	14659	-49541

NL1/1a	GW / opgw	2681	17453	41072	2681	17453	-41072
Wind, 10°C	150C1F1	9951	51894	125940	9951	51894	-125940
Permanent loads yg= 1.2	150C1F2	9975	49085	120445	9975	49085	-120445
Wind angle: 90°	150C1F3	10010	45527	113503	10010	45527	-113503
	380C2F1	19902	103788	251880	19902	103788	-251880
	380C2F2	19950	98169	240891	19950	98169	-240891
	380C2F3	20020	91054	227007	20020	91054	-227007
	RTG	0	0	0	5420	25786	-64086
NL1/1b	GW / opgw	2824	7506	23206	2824	7506	-23206
Wind, -20°C	150C1F1	10451	26052	83699	10451	26052	-83699
Permanent loads yg= 1.2	150C1F2	10460	25654	83210	10460	25654	-83210
Wind angle: 90°	150C1F3	10471	25163	82643	10471	25163	-82643
	380C2F1	20903	52103	167398	20903	52103	-167398
	380C2F2	20920	51308	166420	20920	51308	-166420
	380C2F3	20941	50327	165286	20941	50327	-165286
	RTG	0	0	0	5667	13584	-44272
NL1/3	GW / opgw	11097	24765	67695	11097	24765	-67695
Wind, -5°C	150C1F1	17666	44719	129073	17666	44719	-129073
Permanent loads yg= 1.2	150C1F2	17692	43516	127367	17692	43516	-127367
Wind angle: 90°	150C1F3	17724	42028	125351	17724	42028	-125351
	380C2F1	35333	89438	258145	35333	89438	-258145
	380C2F2	35384	87032	254735	35384	87032	-254735
	380C2F3	35448	84056	250701	35448	84056	-250701
	RTG	0	0	0	22346	43260	-128501
NL1/4	GW / opgw	3621	8148	25600	3621	8148	-25600
Construction/maintenance, +5°C	150C1F1	12001	26367	84867	12001	26367	-84867
Permanent loads yg= 1.2	150C1F2	12008	25997	84481	12008	25997	-84481
Wind angle: 90°	150C1F3	12016	25539	84037	12016	25539	-84037
	380C2F1	24002	52734	169734	24002	52734	-169734
	380C2F2	24016	51993	168963	24016	51993	-168963
	380C2F3	24032	51077	168073	24032	51077	-168073
	RTG	0	0	0	7254	15089	-49887
NL1/1a	GW / opgw	2698	14755	35727	2790	7671	-22187
Wind, 10°C	150C1F1	10022	44423	111357	10328	25593	-77378
Permanent loads yg= 1.2	150C1F2	10048	42189	107028	10340	25017	-76566
Wind angle: -45°	150C1F3	10084	39377	101623	10354	24308	-75614
	380C2F1	20044	88847	222715	20656	51185	-154757
	380C2F2	20096	84378	214056	20680	50034	-153132
	380C2F3	20168	78753	203246	20709	48616	-151227
	RTG	0	0	0	5611	13399	-41398
NL1/1b	GW / opgw	2833	7100	22634	2851	6163	-21712
Wind, -20°C	150C1F1	10474	25014	82479	10514	22571	-80610
Permanent loads yg= 1.2	150C1F2	10480	24715	82165	10514	22493	-80586
Wind angle: -45°	150C1F3	10487	24346	81802	10515	22395	-80559
	380C2F1	20947	50028	164958	21027	45141	-161221
	380C2F2	20960	49430	164329	21029	44985	-161171
	380C2F3	20974	48691	163605	21030	44789	-161117
	RTG	0	0	0	5693	11978	-42980
NL1/3	GW / opgw	11134	22869	65471	11209	18338	-61813
Wind, -5°C	150C1F1	17734	41575	124759	17870	34222	-117585
Permanent loads yg= 1.2	150C1F2	17753	40668	123612	17873	33992	-117474
Wind angle: -45°	150C1F3	17776	39547	122270	17876	33705	-117351
	380C2F1	35467	83149	249518	35740	68443	-235169
	380C2F2	35506	81336	247225	35745	67984	-234948
	380C2F3	35553	79094	244541	35752	67411	-234701
	RTG	0	0	0	22462	35434	-123415
NL1/4	GW / opgw	3627	7788	25200	3639	6935	-24592
Construction/maintenance, +5°C	150C1F1	12019	25399	83909	12049	23077	-82499
Permanent loads yg= 1.2	150C1F2	12023	25119	83664	12049	23001	-82482
Wind angle: -45°	150C1F3	12029	24771	83385	12050	22906	-82465
	380C2F1	24037	50797	167818	24097	46154	-164997
	380C2F2	24046	50237	167329	24098	46003	-164965
	380C2F3	24057	49543	166770	24100	45812	-164931
	RTG	0	0	0	7272	13607	-49061
NL1//1a	GW / opgw	2124	4612	15487	2124	4612	-15487
Wind, 10°C	150C1F1	7833	16496	56705	7833	16496	-56705
Permanent loads yg= 0.9	150C1F2	7835	16379	56626	7835	16379	-56626
Wind angle: 0°	150C1F3	7837	16233	56537	7837	16233	-56537
	380C2F1	15667	32991	113410	15667	32991	-113410
	380C2F2	15670	32757	113252	15670	32757	-113252
	380C2F3	15673	32466	113073	15673	32466	-113073
	RTG	0	0	0	4247	8824	-30625

NL1/1b	GW / opgw	2149	4674	17097	2149	4674	-17097
Wind, -20°C	150C1F1	7929	17420	64043	7929	17420	-64043
Permanent loads yg= 0.9	150C1F2	7929	17401	64043	7929	17401	-64043
Wind angle: 0°	150C1F3	7929	17377	64044	7929	17377	-64044
	380C2F1	15858	34841	128085	15858	34841	-128085
	380C2F2	15858	34803	128086	15858	34803	-128086
	380C2F3	15858	34754	128088	15858	34754	-128088
	RTG	0	0	0	4289	9200	-33873
NL1/3	GW / opgw	10532	16198	58676	10532	16198	-58676
Wind, -5°C	150C1F1	15329	28454	103476	15329	28454	-103476
Permanent loads yg= 0.9	150C1F2	15329	28400	103475	15329	28400	-103475
Wind angle: 0°	150C1F3	15329	28332	103475	15329	28332	-103475
	380C2F1	30657	56907	206952	30657	56907	-206952
	380C2F2	30658	56800	206950	30658	56800	-206950
	380C2F3	30658	56664	206951	30658	56664	-206951
	RTG	0	0	0	21099	32129	-117541
NL1/4	GW / opgw	2942	5588	20508	2942	5588	-20508
Construction/maintenance, +5°C	150C1F1	9477	18313	67373	9477	18313	-67373
Permanent loads yg= 0.9	150C1F2	9477	18294	67374	9477	18294	-67374
Wind angle: 0°	150C1F3	9477	18270	67376	9477	18270	-67376
	380C2F1	18954	36626	134745	18954	36626	-134745
	380C2F2	18954	36588	134748	18954	36588	-134748
	380C2F3	18954	36541	134753	18954	36541	-134753
	RTG	0	0	0	5878	11096	-40949
NL1/6	GW / opgw	2129	4089	15259	2129	4089	-15259
Permanent, +10°C	150C1F1	7844	15085	56299	7844	15085	-56299
Permanent loads yg= 0.9	150C1F2	7844	15085	56299	7844	15085	-56299
	150C1F3	7844	15085	56299	7844	15085	-56299
	380C2F1	15689	30170	112598	15689	30170	-112598
	380C2F2	15689	30170	112598	15689	30170	-112598
	380C2F3	15689	30170	112598	15689	30170	-112598
	RTG	0	0	0	4252	8164	-30469
NL1/1a	GW / opgw	2082	6788	18894	2009	14373	-34301
Wind, 10°C	150C1F1	7726	22078	64265	7459	42631	-104673
Permanent loads yg= 0.9	150C1F2	7739	21426	63167	7477	40266	-99856
Wind angle: 45°	150C1F3	7756	20622	61861	7504	37267	-93756
	380C2F1	15451	44156	128531	14918	85262	-209346
	380C2F2	15478	42852	126333	14955	80531	-199712
	380C2F3	15511	41244	123723	15008	74535	-187512
	RTG	0	0	0	4062	21079	-52834
NL1/1b	GW / opgw	2146	4960	17224	2124	6012	-18573
Wind, -20°C	150C1F1	7922	18192	64270	7869	20897	-67118
Permanent loads yg= 0.9	150C1F2	7923	18109	64226	7877	20559	-66657
Wind angle: 45°	150C1F3	7924	18005	64177	7886	20143	-66121
	380C2F1	15844	36384	128539	15739	41794	-134235
	380C2F2	15846	36218	128452	15754	41119	-133314
	380C2F3	15848	36010	128354	15773	40287	-132242
	RTG	0	0	0	4265	10801	-35149
NL1/3	GW / opgw	10521	17575	58966	10441	22199	-62974
Wind, -5°C	150C1F1	15306	30654	104271	15152	38451	-113105
Permanent loads yg= 0.9	150C1F2	15310	30415	104125	15173	37482	-111729
Wind angle: 45°	150C1F3	15314	30117	103961	15199	36286	-110106
	380C2F1	30613	61307	208541	30304	76901	-226210
	380C2F2	30620	60830	208250	30346	74965	-223458
	380C2F3	30627	60234	207922	30398	72572	-220212
	RTG	0	0	0	21009	39528	-121041
NL1/4	GW / opgw	2940	5856	20566	2926	6770	-21400
Construction/maintenance, +5°C	150C1F1	9472	19058	67499	9434	21551	-69553
Permanent loads yg= 0.9	150C1F2	9473	18979	67470	9440	21245	-69211
Wind angle: 45°	150C1F3	9474	18880	67439	9446	20867	-68815
	380C2F1	18944	38116	134998	18868	43103	-139106
	380C2F2	18946	37957	134941	18879	42490	-138421
	380C2F3	18947	37759	134879	18893	41734	-137631
	RTG	0	0	0	5862	12548	-41666
NL1/1a	GW / opgw	1998	17152	39950	1998	17152	-39950
Wind, 10°C	150C1F1	7410	50451	120560	7410	50451	-120560
Permanent loads yg= 0.9	150C1F2	7426	47524	114626	7426	47524	-114626
Wind angle: 90°	150C1F3	7450	43794	107041	7450	43794	-107041
	380C2F1	14820	100902	241120	14820	100902	-241120
	380C2F2	14853	95047	229251	14853	95047	-229251
	380C2F3	14901	87588	214082	14901	87588	-214082
	RTG	0	0	0	4034	24863	-60645

NL1/1b	GW / opgw	2114	6475	19361	2114	6475	-19361
Wind, -20°C	150C1F1	7841	22077	68869	7841	22077	-68869
Permanent loads yg= 0.9	150C1F2	7852	21624	68173	7852	21624	-68173
Wind angle: 90°	150C1F3	7865	21066	67356	7865	21066	-67356
	380C2F1	15683	44155	137739	15683	44155	-137739
	380C2F2	15705	43248	136346	15705	43248	-136346
	380C2F3	15731	42133	134712	15731	42133	-134712
	RTG	0	0	0	4253	11340	-35899
NL1/3	GW / opgw	10403	24141	65366	10403	24141	-65366
Wind, -5°C	150C1F1	15081	41807	118209	15081	41807	-118209
Permanent loads yg= 0.9	150C1F2	15108	40523	116204	15108	40523	-116204
Wind angle: 90°	150C1F3	15142	38935	113812	15142	38935	-113812
	380C2F1	30161	83613	236419	30161	83613	-236419
	380C2F2	30215	81046	232408	30215	81046	-232408
	380C2F3	30283	77870	227623	30283	77870	-227623
	RTG	0	0	0	20965	41860	-123280
NL1/4	GW / opgw	2918	7163	21924	2918	7163	-21924
Construction/maintenance, +5°C	150C1F1	9413	22617	70874	9413	22617	-70874
Permanent loads yg= 0.9	150C1F2	9421	22208	70346	9421	22208	-70346
Wind angle: 90°	150C1F3	9431	21705	69731	9431	21705	-69731
	380C2F1	18825	45233	141748	18825	45233	-141748
	380C2F2	18842	44417	140691	18842	44417	-140691
	380C2F3	18862	43409	139462	18862	43409	-139462
	RTG	0	0	0	5854	13012	-42136
NL1/1a	GW / opgw	2009	14373	34301	2082	6788	-18894
Wind, 10°C	150C1F1	7459	42631	104673	7726	22078	-64265
Permanent loads yg= 0.9	150C1F2	7477	40266	99856	7739	21426	-63167
Wind angle: -45°	150C1F3	7504	37267	93756	7756	20622	-61861
	380C2F1	14918	85262	209346	15451	44156	-128531
	380C2F2	14955	80531	199712	15478	42852	-126333
	380C2F3	15008	74535	187512	15511	41244	-123723
	RTG	0	0	0	4200	11382	-33872
NL1/1b	GW / opgw	2124	6012	18573	2146	4960	-17224
Wind, -20°C	150C1F1	7869	20897	67118	7922	18192	-64270
Permanent loads yg= 0.9	150C1F2	7877	20559	66657	7923	18109	-64226
Wind angle: -45°	150C1F3	7886	20143	66121	7924	18005	-64177
	380C2F1	15739	41794	134235	15844	36384	-128539
	380C2F2	15754	41119	133314	15846	36218	-128452
	380C2F3	15773	40287	132242	15848	36010	-128354
	RTG	0	0	0	4286	9560	-33960
NL1/3	GW / opgw	10441	22199	62974	10521	17575	-58966
Wind, -5°C	150C1F1	15152	38451	113105	15306	30654	-104271
Permanent loads yg= 0.9	150C1F2	15173	37482	111729	15310	30415	-104125
Wind angle: -45°	150C1F3	15199	36286	110106	15314	30117	-103961
	380C2F1	30304	76901	226210	30613	61307	-208541
	380C2F2	30346	74965	223458	30620	60830	-208250
	380C2F3	30398	72572	220212	30627	60234	-207922
	RTG	0	0	0	21088	33891	-117658
NL1/4	GW / opgw	2926	6770	21400	2940	5856	-20566
Construction/maintenance, +5°C	150C1F1	9434	21551	69553	9472	19058	-67499
Permanent loads yg= 0.9	150C1F2	9440	21245	69211	9473	18979	-67470
Wind angle: -45°	150C1F3	9446	20867	68815	9474	18880	-67439
	380C2F1	18868	43103	139106	18944	38116	-134998
	380C2F2	18879	42490	138421	18946	37957	-134941
	380C2F3	18893	41734	137631	18947	37759	-134879
	RTG	0	0	0	5876	11440	-40973

ZWW4HK450+5

Loadcases for tower strength (Special limit state)

		Ahead			Back		
Loadcase according to 50341-3-15	Att. Point	Vertical [N]	Transversal [N]	Longitudinal [N]	Vertical [N]	Transversal [N]	Longitudinal [N]
NL3/1a	GW / opgw	0	0	0	2829	5483	-19564
Wind, 10°C	150C1F1	0	0	0	10423	19924	-71832
Permanent loads yg= 1.2	150C1F2	0	0	0	10423	19873	-71825
Wind angle: 0°	150C1F3	0	0	0	10423	19807	-71818
	380C2F1	0	0	0	20845	39849	-143664
	380C2F2	0	0	0	20846	39745	-143649
	380C2F3	0	0	0	20847	39615	-143635
	RTG	0	0	0	5652	10784	-39049
NL3/1b	GW / opgw	0	0	0	2853	5873	-21643
Wind, -20°C	150C1F1	0	0	0	10519	21782	-80513
Permanent loads yg= 1.2	150C1F2	0	0	0	10519	21767	-80515
Wind angle: 0°	150C1F3	0	0	0	10519	21748	-80517
	380C2F1	0	0	0	21037	43563	-161026
	380C2F2	0	0	0	21037	43533	-161029
	380C2F3	0	0	0	21037	43496	-161034
	RTG	0	0	0	5695	11607	-42948
NL3/3	GW / opgw	0	0	0	4732	8773	-31324
Wind, -5°C	150C1F1	0	0	0	12135	23533	-85656
Permanent loads yg= 1.2	150C1F2	0	0	0	12135	23490	-85654
Wind angle: 0°	150C1F3	0	0	0	12136	23435	-85653
	380C2F1	0	0	0	24270	47066	-171312
	380C2F2	0	0	0	24271	46980	-171308
	380C2F3	0	0	0	24271	46871	-171307
	RTG	0	0	0	9465	17256	-62512
NL3/4	GW / opgw	0	0	0	3480	6410	-23646
Construction/maintenance, +5°C	150C1F1	0	0	0	11730	21809	-80617
Permanent loads yg= 1.2	150C1F2	0	0	0	11730	21795	-80619
Wind angle: 0°	150C1F3	0	0	0	11730	21776	-80622
	380C2F1	0	0	0	23460	43619	-161233
	380C2F2	0	0	0	23460	43589	-161238
	380C2F3	0	0	0	23460	43552	-161244
	RTG	0	0	0	6951	12753	-47225
NL3/1a	GW / opgw	0	0	0	2757	9522	-25485
Wind, 10°C	150C1F1	0	0	0	10232	30371	-85052
Permanent loads yg= 1.2	150C1F2	0	0	0	10252	29342	-83294
Wind angle: 45°	150C1F3	0	0	0	10277	28068	-81186
	380C2F1	0	0	0	20463	60742	-170104
	380C2F2	0	0	0	20503	58683	-166588
	380C2F3	0	0	0	20554	56136	-162373
	RTG	0	0	0	5567	15600	-44790
NL3/1b	GW / opgw	0	0	0	2840	6791	-22252
Wind, -20°C	150C1F1	0	0	0	10489	24218	-81685
Permanent loads yg= 1.2	150C1F2	0	0	0	10493	23994	-81488
Wind angle: 45°	150C1F3	0	0	0	10498	23716	-81263
	380C2F1	0	0	0	20979	48436	-163369
	380C2F2	0	0	0	20987	47988	-162976
	380C2F3	0	0	0	20996	47432	-162525
	RTG	0	0	0	5683	12741	-43421
NL3/3	GW / opgw	0	0	0	4620	14747	-39156
Wind, -5°C	150C1F1	0	0	0	11987	31733	-94119
Permanent loads yg= 1.2	150C1F2	0	0	0	12005	30931	-92918
Wind angle: 45°	150C1F3	0	0	0	12026	29943	-91501
	380C2F1	0	0	0	23974	63465	-188237
	380C2F2	0	0	0	24009	61863	-185836
	380C2F3	0	0	0	24053	59886	-183002
	RTG	0	0	0	9338	24412	-69949
NL3/4	GW / opgw	0	0	0	3470	7274	-24054
Construction/maintenance, +5°C	150C1F1	0	0	0	11707	24170	-81500
Permanent loads yg= 1.2	150C1F2	0	0	0	11710	23956	-81343
Wind angle: 45°	150C1F3	0	0	0	11714	23691	-81165
	380C2F1	0	0	0	23414	48340	-162999
	380C2F2	0	0	0	23421	47913	-162685
	380C2F3	0	0	0	23428	47381	-162329
	RTG	0	0	0	6943	13839	-47514
NL3/1a	GW / opgw	0	0	0	2737	10870	-28061
Wind, 10°C	150C1F1	0	0	0	10167	33918	-91382
Permanent loads yg= 1.2	150C1F2	0	0	0	10191	32566	-88927
Wind angle: 90°	150C1F3	0	0	0	10222	30885	-85945
	380C2F1	0	0	0	20335	67836	-182764
	380C2F2	0	0	0	20382	65131	-177855
	380C2F3	0	0	0	20443	61769	-171890
	RTG	0	0	0	5536	17249	-47663

NL3/1b	GW / opgw	0	0	0	2834	7092	-22624
Wind, -20°C	150C1F1	0	0	0	10474	24994	-82458
Permanent loads yg= 1.2	150C1F2	0	0	0	10480	24697	-82146
Wind angle: 90°	150C1F3	0	0	0	10487	24330	-81788
	380C2F1	0	0	0	20948	49989	-164916
	380C2F2	0	0	0	20960	49395	-164293
	380C2F3	0	0	0	20974	48660	-163576
	RTG	0	0	0	5677	13098	-43746
NL3/3	GW / opgw	0	0	0	4589	16717	-42628
Wind, -5°C	150C1F1	0	0	0	11927	34514	-98564
Permanent loads yg= 1.2	150C1F2	0	0	0	11950	33449	-96818
Wind angle: 90°	150C1F3	0	0	0	11978	32133	-94734
	380C2F1	0	0	0	23855	69027	-197127
	380C2F2	0	0	0	23900	66899	-193637
	380C2F3	0	0	0	23957	64267	-189469
	RTG	0	0	0	9290	26816	-73757
NL3/4	GW / opgw	0	0	0	3466	7548	-24324
Construction/maintenance, +5°C	150C1F1	0	0	0	11695	24906	-82122
Permanent loads yg= 1.2	150C1F2	0	0	0	11700	24625	-81870
Wind angle: 90°	150C1F3	0	0	0	11706	24276	-81582
	380C2F1	0	0	0	23391	49812	-164244
	380C2F2	0	0	0	23400	49250	-163740
	380C2F3	0	0	0	23411	48553	-163164
	RTG	0	0	0	6938	14170	-47741
NL3/1a	GW / opgw	0	0	0	2817	6317	-20228
Wind, 10°C	150C1F1	0	0	0	10395	22125	-73141
Permanent loads yg= 1.2	150C1F2	0	0	0	10399	21880	-72921
Wind angle: -45°	150C1F3	0	0	0	10404	21576	-72669
	380C2F1	0	0	0	20791	44249	-146283
	380C2F2	0	0	0	20799	43760	-145843
	380C2F3	0	0	0	20808	43152	-145339
	RTG	0	0	0	5640	11806	-39586
NL3/1b	GW / opgw	0	0	0	2851	6084	-21678
Wind, -20°C	150C1F1	0	0	0	10515	22360	-80550
Permanent loads yg= 1.2	150C1F2	0	0	0	10516	22300	-80537
Wind angle: -45°	150C1F3	0	0	0	10516	22223	-80524
	380C2F1	0	0	0	21031	44721	-161101
	380C2F2	0	0	0	21032	44599	-161074
	380C2F3	0	0	0	21033	44447	-161047
	RTG	0	0	0	5693	11879	-42957
NL3/3	GW / opgw	0	0	0	4714	10037	-32168
Wind, -5°C	150C1F1	0	0	0	12117	25316	-86379
Permanent loads yg= 1.2	150C1F2	0	0	0	12119	25121	-86249
Wind angle: -45°	150C1F3	0	0	0	12123	24879	-86102
	380C2F1	0	0	0	24233	50632	-172757
	380C2F2	0	0	0	24239	50243	-172498
	380C2F3	0	0	0	24245	49759	-172205
	RTG	0	0	0	9449	18814	-63165
NL3/4	GW / opgw	0	0	0	3479	6615	-23658
Construction/maintenance, +5°C	150C1F1	0	0	0	11727	22380	-80623
Permanent loads yg= 1.2	150C1F2	0	0	0	11728	22321	-80615
Wind angle: -45°	150C1F3	0	0	0	11728	22246	-80607
	380C2F1	0	0	0	23455	44761	-161246
	380C2F2	0	0	0	23456	44642	-161230
	380C2F3	0	0	0	23457	44492	-161213
	RTG	0	0	0	6950	13020	-47215
NL3/1a	GW / opgw	0	0	0	2128	4338	-15293
Wind, 10°C	150C1F1	0	0	0	7841	15770	-56329
Permanent loads yg= 0.9	150C1F2	0	0	0	7842	15716	-56313
Wind angle: 0°	150C1F3	0	0	0	7842	15648	-56296
	380C2F1	0	0	0	15683	31540	-112657
	380C2F2	0	0	0	15684	31432	-112626
	380C2F3	0	0	0	15685	31296	-112592
	RTG	0	0	0	4251	8487	-30473
NL3/1b	GW / opgw	0	0	0	2149	4655	-17097
Wind, -20°C	150C1F1	0	0	0	7929	17369	-64044
Permanent loads yg= 0.9	150C1F2	0	0	0	7929	17354	-64045
Wind angle: 0°	150C1F3	0	0	0	7929	17335	-64047
	380C2F1	0	0	0	15858	34737	-128089
	380C2F2	0	0	0	15858	34707	-128091
	380C2F3	0	0	0	15858	34669	-128094
	RTG	0	0	0	4289	9176	-33875

NL3/3	GW / opgw	0	0	0	4036	7757	-27533
Wind, -5°C	150C1F1	0	0	0	9557	19436	-70364
Permanent loads yg= 0.9	150C1F2	0	0	0	9557	19391	-70358
Wind angle: 0°	150C1F3	0	0	0	9558	19335	-70352
	380C2F1	0	0	0	19114	38871	-140728
	380C2F2	0	0	0	19115	38782	-140716
	380C2F3	0	0	0	19115	38670	-140704
	RTG	0	0	0	8075	15219	-54909
NL3/4	GW / opgw	0	0	0	2781	5310	-19540
Construction/maintenance, +5°C	150C1F1	0	0	0	9153	17737	-65416
Permanent loads yg= 0.9	150C1F2	0	0	0	9153	17722	-65418
Wind angle: 0°	150C1F3	0	0	0	9153	17703	-65420
	380C2F1	0	0	0	18307	35473	-130833
	380C2F2	0	0	0	18307	35443	-130836
	380C2F3	0	0	0	18307	35405	-130840
	RTG	0	0	0	5555	10552	-39010
NL3/1a	GW / opgw	0	0	0	2052	8836	-22926
Wind, 10°C	150C1F1	0	0	0	7628	27448	-74150
Permanent loads yg= 0.9	150C1F2	0	0	0	7647	26301	-71949
Wind angle: 45°	150C1F3	0	0	0	7672	24873	-69266
	380C2F1	0	0	0	15256	54897	-148299
	380C2F2	0	0	0	15294	52601	-143899
	380C2F3	0	0	0	15344	49746	-138533
	RTG	0	0	0	4153	13867	-38323
NL3/1b	GW / opgw	0	0	0	2132	5660	-18032
Wind, -20°C	150C1F1	0	0	0	7889	20000	-65945
Permanent loads yg= 0.9	150C1F2	0	0	0	7895	19750	-65649
Wind angle: 45°	150C1F3	0	0	0	7901	19440	-65307
	380C2F1	0	0	0	15779	40001	-131890
	380C2F2	0	0	0	15789	39499	-131299
	380C2F3	0	0	0	15802	38880	-130615
	RTG	0	0	0	4273	10392	-34654
NL3/3	GW / opgw	0	0	0	3918	14100	-36743
Wind, -5°C	150C1F1	0	0	0	9383	28425	-81780
Permanent loads yg= 0.9	150C1F2	0	0	0	9402	27535	-80247
Wind angle: 45°	150C1F3	0	0	0	9425	26435	-78414
	380C2F1	0	0	0	18766	56850	-163559
	380C2F2	0	0	0	18803	55070	-160494
	380C2F3	0	0	0	18851	52870	-156828
	RTG	0	0	0	7934	22809	-63968
NL3/4	GW / opgw	0	0	0	2769	6223	-20135
Construction/maintenance, +5°C	150C1F1	0	0	0	9124	20232	-66806
Permanent loads yg= 0.9	150C1F2	0	0	0	9128	20000	-66579
Wind angle: 45°	150C1F3	0	0	0	9133	19712	-66319
	380C2F1	0	0	0	18248	40464	-133611
	380C2F2	0	0	0	18256	40000	-133158
	380C2F3	0	0	0	18265	39425	-132638
	RTG	0	0	0	5544	11683	-39471
NL3/1a	GW / opgw	0	0	0	2036	10290	-25900
Wind, 10°C	150C1F1	0	0	0	7571	31361	-81845
Permanent loads yg= 0.9	150C1F2	0	0	0	7591	29877	-78898
Wind angle: 90°	150C1F3	0	0	0	7619	28019	-75256
	380C2F1	0	0	0	15142	62722	-163689
	380C2F2	0	0	0	15182	59754	-157796
	380C2F3	0	0	0	15238	56038	-150511
	RTG	0	0	0	4124	15702	-41894
NL3/1b	GW / opgw	0	0	0	2124	6003	-18559
Wind, -20°C	150C1F1	0	0	0	7870	20875	-67087
Permanent loads yg= 0.9	150C1F2	0	0	0	7877	20539	-66630
Wind angle: 90°	150C1F3	0	0	0	7887	20126	-66099
	380C2F1	0	0	0	15740	41750	-134173
	380C2F2	0	0	0	15755	41078	-133261
	380C2F3	0	0	0	15773	40252	-132198
	RTG	0	0	0	4265	10791	-35136
NL3/3	GW / opgw	0	0	0	3890	16165	-40570
Wind, -5°C	150C1F1	0	0	0	9322	31501	-87326
Permanent loads yg= 0.9	150C1F2	0	0	0	9344	30327	-85170
Wind angle: 90°	150C1F3	0	0	0	9374	28870	-82560
	380C2F1	0	0	0	18644	63002	-174651
	380C2F2	0	0	0	18689	60654	-170341
	380C2F3	0	0	0	18747	57740	-165120
	RTG	0	0	0	7885	25369	-68357

NL3/4	GW / opgw	0	0	0	2763	6523	-20498
Construction/maintenance, +5°C	150C1F1	0	0	0	9109	21038	-67689
Permanent loads yg= 0.9	150C1F2	0	0	0	9115	20729	-67334
Wind angle: 90°	150C1F3	0	0	0	9122	20348	-66924
	380C2F1	0	0	0	18218	42076	-135378
	380C2F2	0	0	0	18230	41459	-134669
	380C2F3	0	0	0	18244	40697	-133848
	RTG	0	0	0	5538	12039	-39789
NL3/1a	GW / opgw	0	0	0	2112	5258	-16276
Wind, 10°C	150C1F1	0	0	0	7805	18162	-58355
Permanent loads yg= 0.9	150C1F2	0	0	0	7811	17890	-58031
Wind angle: -45°	150C1F3	0	0	0	7817	17553	-57657
	380C2F1	0	0	0	15611	36325	-116711
	380C2F2	0	0	0	15621	35779	-116063
	380C2F3	0	0	0	15633	35106	-115313
	RTG	0	0	0	4236	9590	-31315
NL3/1b	GW / opgw	0	0	0	2147	4876	-17168
Wind, -20°C	150C1F1	0	0	0	7925	17969	-64162
Permanent loads yg= 0.9	150C1F2	0	0	0	7925	17905	-64137
Wind angle: -45°	150C1F3	0	0	0	7926	17825	-64109
	380C2F1	0	0	0	15849	35938	-128324
	380C2F2	0	0	0	15851	35810	-128273
	380C2F3	0	0	0	15852	35650	-128217
	RTG	0	0	0	4287	9457	-33917
NL3/3	GW / opgw	0	0	0	4015	9085	-28615
Wind, -5°C	150C1F1	0	0	0	9533	21323	-71479
Permanent loads yg= 0.9	150C1F2	0	0	0	9537	21113	-71291
Wind angle: -45°	150C1F3	0	0	0	9541	20853	-71076
	380C2F1	0	0	0	19066	42646	-142958
	380C2F2	0	0	0	19073	42226	-142583
	380C2F3	0	0	0	19081	41705	-142153
	RTG	0	0	0	8055	16836	-55784
NL3/4	GW / opgw	0	0	0	2779	5521	-19573
Construction/maintenance, +5°C	150C1F1	0	0	0	9150	18322	-65478
Permanent loads yg= 0.9	150C1F2	0	0	0	9151	18260	-65461
Wind angle: -45°	150C1F3	0	0	0	9151	18183	-65443
	380C2F1	0	0	0	18300	36644	-130955
	380C2F2	0	0	0	18301	36520	-130922
	380C2F3	0	0	0	18302	36366	-130886
	RTG	0	0	0	5553	10824	-39018

ZWW4HK450+5

Loadcases for tower strength (Special limit state)

		Ahead			Back		
Loadcase according to 50341-3-15	Att. Point	Vertical [N]	Transversal [N]	Longitudinal [N]	Vertical [N]	Transversal [N]	Longitudinal [N]
NL3/1a	GW / opgw	2829	5483	19564	0	0	0
Wind, 10°C	150C1F1	10423	19924	71832	0	0	0
Permanent loads yg= 1.2	150C1F2	10423	19873	71825	0	0	0
Wind angle: 0°	150C1F3	10423	19807	71818	0	0	0
	380C2F1	20845	39849	143664	0	0	0
	380C2F2	20846	39745	143649	0	0	0
	380C2F3	20847	39615	143635	0	0	0
	RTG	0	0	0	0	0	0
NL3/1b	GW / opgw	2853	5873	21643	0	0	0
Wind, -20°C	150C1F1	10519	21782	80513	0	0	0
Permanent loads yg= 1.2	150C1F2	10519	21767	80515	0	0	0
Wind angle: 0°	150C1F3	10519	21748	80517	0	0	0
	380C2F1	21037	43563	161026	0	0	0
	380C2F2	21037	43533	161029	0	0	0
	380C2F3	21037	43496	161034	0	0	0
	RTG	0	0	0	0	0	0
NL3/3	GW / opgw	4732	8773	31324	0	0	0
Wind, -5°C	150C1F1	12135	23533	85656	0	0	0
Permanent loads yg= 1.2	150C1F2	12135	23490	85654	0	0	0
Wind angle: 0°	150C1F3	12136	23435	85653	0	0	0
	380C2F1	24270	47066	171312	0	0	0
	380C2F2	24271	46980	171308	0	0	0
	380C2F3	24271	46871	171307	0	0	0
	RTG	0	0	0	0	0	0
NL3/4	GW / opgw	3480	6410	23646	0	0	0
Construction/maintenance, +5°C	150C1F1	11730	21809	80617	0	0	0
Permanent loads yg= 1.2	150C1F2	11730	21795	80619	0	0	0
Wind angle: 0°	150C1F3	11730	21776	80622	0	0	0
	380C2F1	23460	43619	161233	0	0	0
	380C2F2	23460	43589	161238	0	0	0
	380C2F3	23460	43552	161244	0	0	0
	RTG	0	0	0	0	0	0
NL3/1a	GW / opgw	2817	6317	20228	0	0	0
Wind, 10°C	150C1F1	10395	22125	73141	0	0	0
Permanent loads yg= 1.2	150C1F2	10399	21880	72921	0	0	0
Wind angle: 45°	150C1F3	10404	21576	72669	0	0	0
	380C2F1	20791	44249	146283	0	0	0
	380C2F2	20799	43760	145843	0	0	0
	380C2F3	20808	43152	145339	0	0	0
	RTG	0	0	0	0	0	0
NL3/1b	GW / opgw	2851	6084	21678	0	0	0
Wind, -20°C	150C1F1	10515	22360	80550	0	0	0
Permanent loads yg= 1.2	150C1F2	10516	22300	80537	0	0	0
Wind angle: 45°	150C1F3	10516	22223	80524	0	0	0
	380C2F1	21031	44721	161101	0	0	0
	380C2F2	21032	44599	161074	0	0	0
	380C2F3	21033	44447	161047	0	0	0
	RTG	0	0	0	0	0	0
NL3/3	GW / opgw	4714	10037	32168	0	0	0
Wind, -5°C	150C1F1	12117	25316	86379	0	0	0
Permanent loads yg= 1.2	150C1F2	12119	25121	86249	0	0	0
Wind angle: 45°	150C1F3	12123	24879	86102	0	0	0
	380C2F1	24233	50632	172757	0	0	0
	380C2F2	24239	50243	172498	0	0	0
	380C2F3	24245	49759	172205	0	0	0
	RTG	0	0	0	0	0	0
NL3/4	GW / opgw	3479	6615	23658	0	0	0
Construction/maintenance, +5°C	150C1F1	11727	22380	80623	0	0	0
Permanent loads yg= 1.2	150C1F2	11728	22321	80615	0	0	0
Wind angle: 45°	150C1F3	11728	22246	80607	0	0	0
	380C2F1	23455	44761	161246	0	0	0
	380C2F2	23456	44642	161230	0	0	0
	380C2F3	23457	44492	161213	0	0	0
	RTG	0	0	0	0	0	0
NL3/1a	GW / opgw	2737	10870	28061	0	0	0
Wind, 10°C	150C1F1	10167	33918	91382	0	0	0
Permanent loads yg= 1.2	150C1F2	10191	32566	88927	0	0	0
Wind angle: 90°	150C1F3	10222	30885	85945	0	0	0
	380C2F1	20335	67836	182764	0	0	0
	380C2F2	20382	65131	177855	0	0	0
	380C2F3	20443	61769	171890	0	0	0
	RTG	0	0	0	0	0	0

NL3/1b	GW / opgw	2834	7092	22624	0	0	0
Wind, -20°C	150C1F1	10474	24994	82458	0	0	0
Permanent loads yg= 1.2	150C1F2	10480	24697	82146	0	0	0
Wind angle: 90°	150C1F3	10487	24330	81788	0	0	0
	380C2F1	20948	49989	164916	0	0	0
	380C2F2	20960	49395	164293	0	0	0
	380C2F3	20974	48660	163576	0	0	0
	RTG	0	0	0	0	0	0
NL3/3	GW / opgw	4589	16717	42628	0	0	0
Wind, -5°C	150C1F1	11927	34514	98564	0	0	0
Permanent loads yg= 1.2	150C1F2	11950	33449	96818	0	0	0
Wind angle: 90°	150C1F3	11978	32133	94734	0	0	0
	380C2F1	23855	69027	197127	0	0	0
	380C2F2	23900	66899	193637	0	0	0
	380C2F3	23957	64267	189469	0	0	0
	RTG	0	0	0	0	0	0
NL3/4	GW / opgw	3466	7548	24324	0	0	0
Construction/maintenance, +5°C	150C1F1	11695	24906	82122	0	0	0
Permanent loads yg= 1.2	150C1F2	11700	24625	81870	0	0	0
Wind angle: 90°	150C1F3	11706	24276	81582	0	0	0
	380C2F1	23391	49812	164244	0	0	0
	380C2F2	23400	49250	163740	0	0	0
	380C2F3	23411	48553	163164	0	0	0
	RTG	0	0	0	0	0	0
NL3/1a	GW / opgw	2757	9522	25485	0	0	0
Wind, 10°C	150C1F1	10232	30371	85052	0	0	0
Permanent loads yg= 1.2	150C1F2	10252	29342	83294	0	0	0
Wind angle: -45°	150C1F3	10277	28068	81186	0	0	0
	380C2F1	20463	60742	170104	0	0	0
	380C2F2	20503	58683	166588	0	0	0
	380C2F3	20554	56136	162373	0	0	0
	RTG	0	0	0	0	0	0
NL3/1b	GW / opgw	2840	6791	22252	0	0	0
Wind, -20°C	150C1F1	10489	24218	81685	0	0	0
Permanent loads yg= 1.2	150C1F2	10493	23994	81488	0	0	0
Wind angle: -45°	150C1F3	10498	23716	81263	0	0	0
	380C2F1	20979	48436	163369	0	0	0
	380C2F2	20987	47988	162976	0	0	0
	380C2F3	20996	47432	162525	0	0	0
	RTG	0	0	0	0	0	0
NL3/3	GW / opgw	4620	14747	39156	0	0	0
Wind, -5°C	150C1F1	11987	31733	94119	0	0	0
Permanent loads yg= 1.2	150C1F2	12005	30931	92918	0	0	0
Wind angle: -45°	150C1F3	12026	29943	91501	0	0	0
	380C2F1	23974	63465	188237	0	0	0
	380C2F2	24009	61863	185836	0	0	0
	380C2F3	24053	59886	183002	0	0	0
	RTG	0	0	0	0	0	0
NL3/4	GW / opgw	3470	7274	24054	0	0	0
Construction/maintenance, +5°C	150C1F1	11707	24170	81500	0	0	0
Permanent loads yg= 1.2	150C1F2	11710	23956	81343	0	0	0
Wind angle: -45°	150C1F3	11714	23691	81165	0	0	0
	380C2F1	23414	48340	162999	0	0	0
	380C2F2	23421	47913	162685	0	0	0
	380C2F3	23428	47381	162329	0	0	0
	RTG	0	0	0	0	0	0
NL3/1a	GW / opgw	2128	4338	15293	0	0	0
Wind, 10°C	150C1F1	7841	15770	56329	0	0	0
Permanent loads yg= 0.9	150C1F2	7842	15716	56313	0	0	0
Wind angle: 0°	150C1F3	7842	15648	56296	0	0	0
	380C2F1	15683	31540	112657	0	0	0
	380C2F2	15684	31432	112626	0	0	0
	380C2F3	15685	31296	112592	0	0	0
	RTG	0	0	0	0	0	0
NL3/1b	GW / opgw	2149	4655	17097	0	0	0
Wind, -20°C	150C1F1	7929	17369	64044	0	0	0
Permanent loads yg= 0.9	150C1F2	7929	17354	64045	0	0	0
Wind angle: 0°	150C1F3	7929	17335	64047	0	0	0
	380C2F1	15858	34737	128089	0	0	0
	380C2F2	15858	34707	128091	0	0	0
	380C2F3	15858	34669	128094	0	0	0
	RTG	0	0	0	0	0	0

NL3/3	GW / opgw	4036	7757	27533	0	0	0
Wind, -5°C	150C1F1	9557	19436	70364	0	0	0
Permanent loads yg= 0.9	150C1F2	9557	19391	70358	0	0	0
Wind angle: 0°	150C1F3	9558	19335	70352	0	0	0
	380C2F1	19114	38871	140728	0	0	0
	380C2F2	19115	38782	140716	0	0	0
	380C2F3	19115	38670	140704	0	0	0
	RTG	0	0	0	0	0	0
NL3/4	GW / opgw	2781	5310	19540	0	0	0
Construction/maintenance, +5°C	150C1F1	9153	17737	65416	0	0	0
Permanent loads yg= 0.9	150C1F2	9153	17722	65418	0	0	0
Wind angle: 0°	150C1F3	9153	17703	65420	0	0	0
	380C2F1	18307	35473	130833	0	0	0
	380C2F2	18307	35443	130836	0	0	0
	380C2F3	18307	35405	130840	0	0	0
	RTG	0	0	0	0	0	0
NL3/1a	GW / opgw	2112	5258	16276	0	0	0
Wind, 10°C	150C1F1	7805	18162	58355	0	0	0
Permanent loads yg= 0.9	150C1F2	7811	17890	58031	0	0	0
Wind angle: 45°	150C1F3	7817	17553	57657	0	0	0
	380C2F1	15611	36325	116711	0	0	0
	380C2F2	15621	35779	116063	0	0	0
	380C2F3	15633	35106	115313	0	0	0
	RTG	0	0	0	0	0	0
NL3/1b	GW / opgw	2147	4876	17168	0	0	0
Wind, -20°C	150C1F1	7925	17969	64162	0	0	0
Permanent loads yg= 0.9	150C1F2	7925	17905	64137	0	0	0
Wind angle: 45°	150C1F3	7926	17825	64109	0	0	0
	380C2F1	15849	35938	128324	0	0	0
	380C2F2	15851	35810	128273	0	0	0
	380C2F3	15852	35650	128217	0	0	0
	RTG	0	0	0	0	0	0
NL3/3	GW / opgw	4015	9085	28615	0	0	0
Wind, -5°C	150C1F1	9533	21323	71479	0	0	0
Permanent loads yg= 0.9	150C1F2	9537	21113	71291	0	0	0
Wind angle: 45°	150C1F3	9541	20853	71076	0	0	0
	380C2F1	19066	42646	142958	0	0	0
	380C2F2	19073	42226	142583	0	0	0
	380C2F3	19081	41705	142153	0	0	0
	RTG	0	0	0	0	0	0
NL3/4	GW / opgw	2779	5521	19573	0	0	0
Construction/maintenance, +5°C	150C1F1	9150	18322	65478	0	0	0
Permanent loads yg= 0.9	150C1F2	9151	18260	65461	0	0	0
Wind angle: 45°	150C1F3	9151	18183	65443	0	0	0
	380C2F1	18300	36644	130955	0	0	0
	380C2F2	18301	36520	130922	0	0	0
	380C2F3	18302	36366	130886	0	0	0
	RTG	0	0	0	0	0	0
NL3/1a	GW / opgw	2036	10290	25900	0	0	0
Wind, 10°C	150C1F1	7571	31361	81845	0	0	0
Permanent loads yg= 0.9	150C1F2	7591	29877	78898	0	0	0
Wind angle: 90°	150C1F3	7619	28019	75256	0	0	0
	380C2F1	15142	62722	163689	0	0	0
	380C2F2	15182	59754	157796	0	0	0
	380C2F3	15238	56038	150511	0	0	0
	RTG	0	0	0	0	0	0
NL3/1b	GW / opgw	2124	6003	18559	0	0	0
Wind, -20°C	150C1F1	7870	20875	67087	0	0	0
Permanent loads yg= 0.9	150C1F2	7877	20539	66630	0	0	0
Wind angle: 90°	150C1F3	7887	20126	66099	0	0	0
	380C2F1	15740	41750	134173	0	0	0
	380C2F2	15755	41078	133261	0	0	0
	380C2F3	15773	40252	132198	0	0	0
	RTG	0	0	0	0	0	0
NL3/3	GW / opgw	3890	16165	40570	0	0	0
Wind, -5°C	150C1F1	9322	31501	87326	0	0	0
Permanent loads yg= 0.9	150C1F2	9344	30327	85170	0	0	0
Wind angle: 90°	150C1F3	9374	28870	82560	0	0	0
	380C2F1	18644	63002	174651	0	0	0
	380C2F2	18689	60654	170341	0	0	0
	380C2F3	18747	57740	165120	0	0	0
	RTG	0	0	0	0	0	0

NL3/4	GW / opgw	2763	6523	20498	0	0	0
Construction/maintenance, +5°C	150C1F1	9109	21038	67689	0	0	0
Permanent loads yg= 0.9	150C1F2	9115	20729	67334	0	0	0
Wind angle: 90°	150C1F3	9122	20348	66924	0	0	0
	380C2F1	18218	42076	135378	0	0	0
	380C2F2	18230	41459	134669	0	0	0
	380C2F3	18244	40697	133848	0	0	0
	RTG	0	0	0	0	0	0
NL3/1a	GW / opgw	2052	8836	22926	0	0	0
Wind, 10°C	150C1F1	7628	27448	74150	0	0	0
Permanent loads yg= 0.9	150C1F2	7647	26301	71949	0	0	0
Wind angle: -45°	150C1F3	7672	24873	69266	0	0	0
	380C2F1	15256	54897	148299	0	0	0
	380C2F2	15294	52601	143899	0	0	0
	380C2F3	15344	49746	138533	0	0	0
	RTG	0	0	0	0	0	0
NL3/1b	GW / opgw	2132	5660	18032	0	0	0
Wind, -20°C	150C1F1	7889	20000	65945	0	0	0
Permanent loads yg= 0.9	150C1F2	7895	19750	65649	0	0	0
Wind angle: -45°	150C1F3	7901	19440	65307	0	0	0
	380C2F1	15779	40001	131890	0	0	0
	380C2F2	15789	39499	131299	0	0	0
	380C2F3	15802	38880	130615	0	0	0
	RTG	0	0	0	0	0	0
NL3/3	GW / opgw	3918	14100	36743	0	0	0
Wind, -5°C	150C1F1	9383	28425	81780	0	0	0
Permanent loads yg= 0.9	150C1F2	9402	27535	80247	0	0	0
Wind angle: -45°	150C1F3	9425	26435	78414	0	0	0
	380C2F1	18766	56850	163559	0	0	0
	380C2F2	18803	55070	160494	0	0	0
	380C2F3	18851	52870	156828	0	0	0
	RTG	0	0	0	0	0	0
NL3/4	GW / opgw	2769	6223	20135	0	0	0
Construction/maintenance, +5°C	150C1F1	9124	20232	66806	0	0	0
Permanent loads yg= 0.9	150C1F2	9128	20000	66579	0	0	0
Wind angle: -45°	150C1F3	9133	19712	66319	0	0	0
	380C2F1	18248	40464	133611	0	0	0
	380C2F2	18256	40000	133158	0	0	0
	380C2F3	18265	39425	132638	0	0	0
	RTG	0	0	0	0	0	0

ZWW4HK450+5

Loadcases for tower strength (Special limit state)

		Ahead			Back		
Loadcase according to 50341-3-15	Att. Point	Vertical [N]	Transversal [N]	Longitudinal [N]	Vertical [N]	Transversal [N]	Longitudinal [N]
NL3/1a	GW / opgw	2829	5483	19564	2829	5483	-19564
Wind, 10°C	150C1F1	10423	19924	71832	10423	19924	-71832
Permanent loads yg= 1.2	150C1F2	10423	19873	71825	10423	19873	-71825
Wind angle: 0°	150C1F3	10423	19807	71818	10423	19807	-71818
	380C2F1	0	0	0	0	0	0
	380C2F2	0	0	0	0	0	0
	380C2F3	0	0	0	0	0	0
	RTG	0	0	0	0	0	0
NL3/1b	GW / opgw	2853	5873	21643	2853	5873	-21643
Wind, -20°C	150C1F1	10519	21782	80513	10519	21782	-80513
Permanent loads yg= 1.2	150C1F2	10519	21767	80515	10519	21767	-80515
Wind angle: 0°	150C1F3	10519	21748	80517	10519	21748	-80517
	380C2F1	0	0	0	0	0	0
	380C2F2	0	0	0	0	0	0
	380C2F3	0	0	0	0	0	0
	RTG	0	0	0	0	0	0
NL3/3	GW / opgw	4732	8773	31324	4732	8773	-31324
Wind, -5°C	150C1F1	12135	23533	85656	12135	23533	-85656
Permanent loads yg= 1.2	150C1F2	12135	23490	85654	12135	23490	-85654
Wind angle: 0°	150C1F3	12136	23435	85653	12136	23435	-85653
	380C2F1	0	0	0	0	0	0
	380C2F2	0	0	0	0	0	0
	380C2F3	0	0	0	0	0	0
	RTG	0	0	0	0	0	0
NL3/4	GW / opgw	3480	6410	23646	3480	6410	-23646
Construction/maintenance, +5°C	150C1F1	11730	21809	80617	11730	21809	-80617
Permanent loads yg= 1.2	150C1F2	11730	21795	80619	11730	21795	-80619
Wind angle: 0°	150C1F3	11730	21776	80622	11730	21776	-80622
	380C2F1	0	0	0	0	0	0
	380C2F2	0	0	0	0	0	0
	380C2F3	0	0	0	0	0	0
	RTG	0	0	0	0	0	0
NL3/1a	GW / opgw	2817	6317	20228	2757	9522	-25485
Wind, 10°C	150C1F1	10395	22125	73141	10232	30371	-85052
Permanent loads yg= 1.2	150C1F2	10399	21880	72921	10252	29342	-83294
Wind angle: 45°	150C1F3	10404	21576	72669	10277	28068	-81186
	380C2F1	0	0	0	0	0	0
	380C2F2	0	0	0	0	0	0
	380C2F3	0	0	0	0	0	0
	RTG	0	0	0	0	0	0
NL3/1b	GW / opgw	2851	6084	21678	2840	6791	-22252
Wind, -20°C	150C1F1	10515	22360	80550	10489	24218	-81685
Permanent loads yg= 1.2	150C1F2	10516	22300	80537	10493	23994	-81488
Wind angle: 45°	150C1F3	10516	22223	80524	10498	23716	-81263
	380C2F1	0	0	0	0	0	0
	380C2F2	0	0	0	0	0	0
	380C2F3	0	0	0	0	0	0
	RTG	0	0	0	0	0	0
NL3/3	GW / opgw	4714	10037	32168	4620	14747	-39156
Wind, -5°C	150C1F1	12117	25316	86379	11987	31733	-94119
Permanent loads yg= 1.2	150C1F2	12119	25121	86249	12005	30931	-92918
Wind angle: 45°	150C1F3	12123	24879	86102	12026	29943	-91501
	380C2F1	0	0	0	0	0	0
	380C2F2	0	0	0	0	0	0
	380C2F3	0	0	0	0	0	0
	RTG	0	0	0	0	0	0
NL3/4	GW / opgw	3479	6615	23658	3470	7274	-24054
Construction/maintenance, +5°C	150C1F1	11727	22380	80623	11707	24170	-81500
Permanent loads yg= 1.2	150C1F2	11728	22321	80615	11710	23956	-81343
Wind angle: 45°	150C1F3	11728	22246	80607	11714	23691	-81165
	380C2F1	0	0	0	0	0	0
	380C2F2	0	0	0	0	0	0
	380C2F3	0	0	0	0	0	0
	RTG	0	0	0	0	0	0
NL3/1a	GW / opgw	2737	10870	28061	2737	10870	-28061
Wind, 10°C	150C1F1	10167	33918	91382	10167	33918	-91382
Permanent loads yg= 1.2	150C1F2	10191	32566	88927	10191	32566	-88927
Wind angle: 90°	150C1F3	10222	30885	85945	10222	30885	-85945
	380C2F1	0	0	0	0	0	0
	380C2F2	0	0	0	0	0	0
	380C2F3	0	0	0	0	0	0
	RTG	0	0	0	0	0	0

NL3/1b	GW / opgw	2834	7092	22624	2834	7092	-22624
Wind, -20°C	150C1F1	10474	24994	82458	10474	24994	-82458
Permanent loads yg= 1.2	150C1F2	10480	24697	82146	10480	24697	-82146
Wind angle: 90°	150C1F3	10487	24330	81788	10487	24330	-81788
	380C2F1	0	0	0	0	0	0
	380C2F2	0	0	0	0	0	0
	380C2F3	0	0	0	0	0	0
	RTG	0	0	0	0	0	0
NL3/3	GW / opgw	4589	16717	42628	4589	16717	-42628
Wind, -5°C	150C1F1	11927	34514	98564	11927	34514	-98564
Permanent loads yg= 1.2	150C1F2	11950	33449	96818	11950	33449	-96818
Wind angle: 90°	150C1F3	11978	32133	94734	11978	32133	-94734
	380C2F1	0	0	0	0	0	0
	380C2F2	0	0	0	0	0	0
	380C2F3	0	0	0	0	0	0
	RTG	0	0	0	0	0	0
NL3/4	GW / opgw	3466	7548	24324	3466	7548	-24324
Construction/maintenance, +5°C	150C1F1	11695	24906	82122	11695	24906	-82122
Permanent loads yg= 1.2	150C1F2	11700	24625	81870	11700	24625	-81870
Wind angle: 90°	150C1F3	11706	24276	81582	11706	24276	-81582
	380C2F1	0	0	0	0	0	0
	380C2F2	0	0	0	0	0	0
	380C2F3	0	0	0	0	0	0
	RTG	0	0	0	0	0	0
NL3/1a	GW / opgw	2757	9522	25485	2817	6317	-20228
Wind, 10°C	150C1F1	10232	30371	85052	10395	22125	-73141
Permanent loads yg= 1.2	150C1F2	10252	29342	83294	10399	21880	-72921
Wind angle: -45°	150C1F3	10277	28068	81186	10404	21576	-72669
	380C2F1	0	0	0	0	0	0
	380C2F2	0	0	0	0	0	0
	380C2F3	0	0	0	0	0	0
	RTG	0	0	0	0	0	0
NL3/1b	GW / opgw	2840	6791	22252	2851	6084	-21678
Wind, -20°C	150C1F1	10489	24218	81685	10515	22360	-80550
Permanent loads yg= 1.2	150C1F2	10493	23994	81488	10516	22300	-80537
Wind angle: -45°	150C1F3	10498	23716	81263	10516	22223	-80524
	380C2F1	0	0	0	0	0	0
	380C2F2	0	0	0	0	0	0
	380C2F3	0	0	0	0	0	0
	RTG	0	0	0	0	0	0
NL3/3	GW / opgw	4620	14747	39156	4714	10037	-32168
Wind, -5°C	150C1F1	11987	31733	94119	12117	25316	-86379
Permanent loads yg= 1.2	150C1F2	12005	30931	92918	12119	25121	-86249
Wind angle: -45°	150C1F3	12026	29943	91501	12123	24879	-86102
	380C2F1	0	0	0	0	0	0
	380C2F2	0	0	0	0	0	0
	380C2F3	0	0	0	0	0	0
	RTG	0	0	0	0	0	0
NL3/4	GW / opgw	3470	7274	24054	3479	6615	-23658
Construction/maintenance, +5°C	150C1F1	11707	24170	81500	11727	22380	-80623
Permanent loads yg= 1.2	150C1F2	11710	23956	81343	11728	22321	-80615
Wind angle: -45°	150C1F3	11714	23691	81165	11728	22246	-80607
	380C2F1	0	0	0	0	0	0
	380C2F2	0	0	0	0	0	0
	380C2F3	0	0	0	0	0	0
	RTG	0	0	0	0	0	0
NL3/1a	GW / opgw	2128	4338	15293	2128	4338	-15293
Wind, 10°C	150C1F1	7841	15770	56329	7841	15770	-56329
Permanent loads yg= 0.9	150C1F2	7842	15716	56313	7842	15716	-56313
Wind angle: 0°	150C1F3	7842	15648	56296	7842	15648	-56296
	380C2F1	0	0	0	0	0	0
	380C2F2	0	0	0	0	0	0
	380C2F3	0	0	0	0	0	0
	RTG	0	0	0	0	0	0
NL3/1b	GW / opgw	2149	4655	17097	2149	4655	-17097
Wind, -20°C	150C1F1	7929	17369	64044	7929	17369	-64044
Permanent loads yg= 0.9	150C1F2	7929	17354	64045	7929	17354	-64045
Wind angle: 0°	150C1F3	7929	17335	64047	7929	17335	-64047
	380C2F1	0	0	0	0	0	0
	380C2F2	0	0	0	0	0	0
	380C2F3	0	0	0	0	0	0
	RTG	0	0	0	0	0	0

NL3/3	GW / opgw	4036	7757	27533	4036	7757	-27533
Wind, -5°C	150C1F1	9557	19436	70364	9557	19436	-70364
Permanent loads yg= 0.9	150C1F2	9557	19391	70358	9557	19391	-70358
Wind angle: 0°	150C1F3	9558	19335	70352	9558	19335	-70352
	380C2F1	0	0	0	0	0	0
	380C2F2	0	0	0	0	0	0
	380C2F3	0	0	0	0	0	0
	RTG	0	0	0	0	0	0
NL3/4	GW / opgw	2781	5310	19540	2781	5310	-19540
Construction/maintenance, +5°C	150C1F1	9153	17737	65416	9153	17737	-65416
Permanent loads yg= 0.9	150C1F2	9153	17722	65418	9153	17722	-65418
Wind angle: 0°	150C1F3	9153	17703	65420	9153	17703	-65420
	380C2F1	0	0	0	0	0	0
	380C2F2	0	0	0	0	0	0
	380C2F3	0	0	0	0	0	0
	RTG	0	0	0	0	0	0
NL3/1a	GW / opgw	2112	5258	16276	2052	8836	-22926
Wind, 10°C	150C1F1	7805	18162	58355	7628	27448	-74150
Permanent loads yg= 0.9	150C1F2	7811	17890	58031	7647	26301	-71949
Wind angle: 45°	150C1F3	7817	17553	57657	7672	24873	-69266
	380C2F1	0	0	0	0	0	0
	380C2F2	0	0	0	0	0	0
	380C2F3	0	0	0	0	0	0
	RTG	0	0	0	0	0	0
NL3/1b	GW / opgw	2147	4876	17168	2132	5660	-18032
Wind, -20°C	150C1F1	7925	17969	64162	7889	20000	-65945
Permanent loads yg= 0.9	150C1F2	7925	17905	64137	7895	19750	-65649
Wind angle: 45°	150C1F3	7926	17825	64109	7901	19440	-65307
	380C2F1	0	0	0	0	0	0
	380C2F2	0	0	0	0	0	0
	380C2F3	0	0	0	0	0	0
	RTG	0	0	0	0	0	0
NL3/3	GW / opgw	4015	9085	28615	3918	14100	-36743
Wind, -5°C	150C1F1	9533	21323	71479	9383	28425	-81780
Permanent loads yg= 0.9	150C1F2	9537	21113	71291	9402	27535	-80247
Wind angle: 45°	150C1F3	9541	20853	71076	9425	26435	-78414
	380C2F1	0	0	0	0	0	0
	380C2F2	0	0	0	0	0	0
	380C2F3	0	0	0	0	0	0
	RTG	0	0	0	0	0	0
NL3/4	GW / opgw	2779	5521	19573	2769	6223	-20135
Construction/maintenance, +5°C	150C1F1	9150	18322	65478	9124	20232	-66806
Permanent loads yg= 0.9	150C1F2	9151	18260	65461	9128	20000	-66579
Wind angle: 45°	150C1F3	9151	18183	65443	9133	19712	-66319
	380C2F1	0	0	0	0	0	0
	380C2F2	0	0	0	0	0	0
	380C2F3	0	0	0	0	0	0
	RTG	0	0	0	0	0	0
NL3/1a	GW / opgw	2036	10290	25900	2036	10290	-25900
Wind, 10°C	150C1F1	7571	31361	81845	7571	31361	-81845
Permanent loads yg= 0.9	150C1F2	7591	29877	78898	7591	29877	-78898
Wind angle: 90°	150C1F3	7619	28019	75256	7619	28019	-75256
	380C2F1	0	0	0	0	0	0
	380C2F2	0	0	0	0	0	0
	380C2F3	0	0	0	0	0	0
	RTG	0	0	0	0	0	0
NL3/1b	GW / opgw	2124	6003	18559	2124	6003	-18559
Wind, -20°C	150C1F1	7870	20875	67087	7870	20875	-67087
Permanent loads yg= 0.9	150C1F2	7877	20539	66630	7877	20539	-66630
Wind angle: 90°	150C1F3	7887	20126	66099	7887	20126	-66099
	380C2F1	0	0	0	0	0	0
	380C2F2	0	0	0	0	0	0
	380C2F3	0	0	0	0	0	0
	RTG	0	0	0	0	0	0
NL3/3	GW / opgw	3890	16165	40570	3890	16165	-40570
Wind, -5°C	150C1F1	9322	31501	87326	9322	31501	-87326
Permanent loads yg= 0.9	150C1F2	9344	30327	85170	9344	30327	-85170
Wind angle: 90°	150C1F3	9374	28870	82560	9374	28870	-82560
	380C2F1	0	0	0	0	0	0
	380C2F2	0	0	0	0	0	0
	380C2F3	0	0	0	0	0	0
	RTG	0	0	0	0	0	0

NL3/4	GW / opgw	2763	6523	20498	2763	6523	-20498
Construction/maintenance, +5°C	150C1F1	9109	21038	67689	9109	21038	-67689
Permanent loads yg= 0.9	150C1F2	9115	20729	67334	9115	20729	-67334
Wind angle: 90°	150C1F3	9122	20348	66924	9122	20348	-66924
	380C2F1	0	0	0	0	0	0
	380C2F2	0	0	0	0	0	0
	380C2F3	0	0	0	0	0	0
	RTG	0	0	0	0	0	0
NL3/1a	GW / opgw	2052	8836	22926	2112	5258	-16276
Wind, 10°C	150C1F1	7628	27448	74150	7805	18162	-58355
Permanent loads yg= 0.9	150C1F2	7647	26301	71949	7811	17890	-58031
Wind angle: -45°	150C1F3	7672	24873	69266	7817	17553	-57657
	380C2F1	0	0	0	0	0	0
	380C2F2	0	0	0	0	0	0
	380C2F3	0	0	0	0	0	0
	RTG	0	0	0	0	0	0
NL3/1b	GW / opgw	2132	5660	18032	2147	4876	-17168
Wind, -20°C	150C1F1	7889	20000	65945	7925	17969	-64162
Permanent loads yg= 0.9	150C1F2	7895	19750	65649	7925	17905	-64137
Wind angle: -45°	150C1F3	7901	19440	65307	7926	17825	-64109
	380C2F1	0	0	0	0	0	0
	380C2F2	0	0	0	0	0	0
	380C2F3	0	0	0	0	0	0
	RTG	0	0	0	0	0	0
NL3/3	GW / opgw	3918	14100	36743	4015	9085	-28615
Wind, -5°C	150C1F1	9383	28425	81780	9533	21323	-71479
Permanent loads yg= 0.9	150C1F2	9402	27535	80247	9537	21113	-71291
Wind angle: -45°	150C1F3	9425	26435	78414	9541	20853	-71076
	380C2F1	0	0	0	0	0	0
	380C2F2	0	0	0	0	0	0
	380C2F3	0	0	0	0	0	0
	RTG	0	0	0	0	0	0
NL3/4	GW / opgw	2769	6223	20135	2779	5521	-19573
Construction/maintenance, +5°C	150C1F1	9124	20232	66806	9150	18322	-65478
Permanent loads yg= 0.9	150C1F2	9128	20000	66579	9151	18260	-65461
Wind angle: -45°	150C1F3	9133	19712	66319	9151	18183	-65443
	380C2F1	0	0	0	0	0	0
	380C2F2	0	0	0	0	0	0
	380C2F3	0	0	0	0	0	0
	RTG	0	0	0	0	0	0

ZWW4HK450+5

Loadcases for tower strength (Special limit state)

		Ahead			Back		
Loadcase according to 50341-3-15	Att. Point	Vertical [N]	Transversal [N]	Longitudinal [N]	Vertical [N]	Transversal [N]	Longitudinal [N]
NL3/1a	GW / opgw	0	0	0	0	0	0
Wind, 10°C	150C1F1	0	0	0	0	0	0
Permanent loads yg= 1.2	150C1F2	0	0	0	0	0	0
Wind angle: 0°	150C1F3	0	0	0	0	0	0
	380C2F1	20845	39849	143664	20845	39849	-143664
	380C2F2	20846	39745	143649	20846	39745	-143649
	380C2F3	20847	39615	143635	20847	39615	-143635
	RTG	0	0	0	5652	10784	-39049
NL3/1b	GW / opgw	0	0	0	0	0	0
Wind, -20°C	150C1F1	0	0	0	0	0	0
Permanent loads yg= 1.2	150C1F2	0	0	0	0	0	0
Wind angle: 0°	150C1F3	0	0	0	0	0	0
	380C2F1	21037	43563	161026	21037	43563	-161026
	380C2F2	21037	43533	161029	21037	43533	-161029
	380C2F3	21037	43496	161034	21037	43496	-161034
	RTG	0	0	0	5695	11607	-42948
NL3/3	GW / opgw	0	0	0	0	0	0
Wind, -5°C	150C1F1	0	0	0	0	0	0
Permanent loads yg= 1.2	150C1F2	0	0	0	0	0	0
Wind angle: 0°	150C1F3	0	0	0	0	0	0
	380C2F1	24270	47066	171312	24270	47066	-171312
	380C2F2	24271	46980	171308	24271	46980	-171308
	380C2F3	24271	46871	171307	24271	46871	-171307
	RTG	0	0	0	9465	17256	-62512
NL3/4	GW / opgw	0	0	0	0	0	0
Construction/maintenance, +5°C	150C1F1	0	0	0	0	0	0
Permanent loads yg= 1.2	150C1F2	0	0	0	0	0	0
Wind angle: 0°	150C1F3	0	0	0	0	0	0
	380C2F1	23460	43619	161233	23460	43619	-161233
	380C2F2	23460	43589	161238	23460	43589	-161238
	380C2F3	23460	43552	161244	23460	43552	-161244
	RTG	0	0	0	6951	12753	-47225
NL3/1a	GW / opgw	0	0	0	0	0	0
Wind, 10°C	150C1F1	0	0	0	0	0	0
Permanent loads yg= 1.2	150C1F2	0	0	0	0	0	0
Wind angle: 45°	150C1F3	0	0	0	0	0	0
	380C2F1	20791	44249	146283	20463	60742	-170104
	380C2F2	20799	43760	145843	20503	58683	-166588
	380C2F3	20808	43152	145339	20554	56136	-162373
	RTG	0	0	0	5567	15600	-44790
NL3/1b	GW / opgw	0	0	0	0	0	0
Wind, -20°C	150C1F1	0	0	0	0	0	0
Permanent loads yg= 1.2	150C1F2	0	0	0	0	0	0
Wind angle: 45°	150C1F3	0	0	0	0	0	0
	380C2F1	21031	44721	161101	20979	48436	-163369
	380C2F2	21032	44599	161074	20987	47988	-162976
	380C2F3	21033	44447	161047	20996	47432	-162525
	RTG	0	0	0	5683	12741	-43421
NL3/3	GW / opgw	0	0	0	0	0	0
Wind, -5°C	150C1F1	0	0	0	0	0	0
Permanent loads yg= 1.2	150C1F2	0	0	0	0	0	0
Wind angle: 45°	150C1F3	0	0	0	0	0	0
	380C2F1	24233	50632	172757	23974	63465	-188237
	380C2F2	24239	50243	172498	24009	61863	-185836
	380C2F3	24245	49759	172205	24053	59886	-183002
	RTG	0	0	0	9338	24412	-69949
NL3/4	GW / opgw	0	0	0	0	0	0
Construction/maintenance, +5°C	150C1F1	0	0	0	0	0	0
Permanent loads yg= 1.2	150C1F2	0	0	0	0	0	0
Wind angle: 45°	150C1F3	0	0	0	0	0	0
	380C2F1	23455	44761	161246	23414	48340	-162999
	380C2F2	23456	44642	161230	23421	47913	-162685
	380C2F3	23457	44492	161213	23428	47381	-162329
	RTG	0	0	0	6943	13839	-47514
NL3/1a	GW / opgw	0	0	0	0	0	0
Wind, 10°C	150C1F1	0	0	0	0	0	0
Permanent loads yg= 1.2	150C1F2	0	0	0	0	0	0
Wind angle: 90°	150C1F3	0	0	0	0	0	0
	380C2F1	20335	67836	182764	20335	67836	-182764
	380C2F2	20382	65131	177855	20382	65131	-177855
	380C2F3	20443	61769	171890	20443	61769	-171890
	RTG	0	0	0	5536	17249	-47663

NL3/1b	GW / opgw	0	0	0	0	0	0
Wind, -20°C	150C1F1	0	0	0	0	0	0
Permanent loads yg= 1.2	150C1F2	0	0	0	0	0	0
Wind angle: 90°	150C1F3	0	0	0	0	0	0
	380C2F1	20948	49989	164916	20948	49989	-164916
	380C2F2	20960	49395	164293	20960	49395	-164293
	380C2F3	20974	48660	163576	20974	48660	-163576
	RTG	0	0	0	5677	13098	-43746
NL3/3	GW / opgw	0	0	0	0	0	0
Wind, -5°C	150C1F1	0	0	0	0	0	0
Permanent loads yg= 1.2	150C1F2	0	0	0	0	0	0
Wind angle: 90°	150C1F3	0	0	0	0	0	0
	380C2F1	23855	69027	197127	23855	69027	-197127
	380C2F2	23900	66899	193637	23900	66899	-193637
	380C2F3	23957	64267	189469	23957	64267	-189469
	RTG	0	0	0	9290	26816	-73757
NL3/4	GW / opgw	0	0	0	0	0	0
Construction/maintenance, +5°C	150C1F1	0	0	0	0	0	0
Permanent loads yg= 1.2	150C1F2	0	0	0	0	0	0
Wind angle: 90°	150C1F3	0	0	0	0	0	0
	380C2F1	23391	49812	164244	23391	49812	-164244
	380C2F2	23400	49250	163740	23400	49250	-163740
	380C2F3	23411	48553	163164	23411	48553	-163164
	RTG	0	0	0	6938	14170	-47741
NL3/1a	GW / opgw	0	0	0	0	0	0
Wind, 10°C	150C1F1	0	0	0	0	0	0
Permanent loads yg= 1.2	150C1F2	0	0	0	0	0	0
Wind angle: -45°	150C1F3	0	0	0	0	0	0
	380C2F1	20463	60742	170104	20791	44249	-146283
	380C2F2	20503	58683	166588	20799	43760	-145843
	380C2F3	20554	56136	162373	20808	43152	-145339
	RTG	0	0	0	5640	11806	-39586
NL3/1b	GW / opgw	0	0	0	0	0	0
Wind, -20°C	150C1F1	0	0	0	0	0	0
Permanent loads yg= 1.2	150C1F2	0	0	0	0	0	0
Wind angle: -45°	150C1F3	0	0	0	0	0	0
	380C2F1	20979	48436	163369	21031	44721	-161101
	380C2F2	20987	47988	162976	21032	44599	-161074
	380C2F3	20996	47432	162525	21033	44447	-161047
	RTG	0	0	0	5693	11879	-42957
NL3/3	GW / opgw	0	0	0	0	0	0
Wind, -5°C	150C1F1	0	0	0	0	0	0
Permanent loads yg= 1.2	150C1F2	0	0	0	0	0	0
Wind angle: -45°	150C1F3	0	0	0	0	0	0
	380C2F1	23974	63465	188237	24233	50632	-172757
	380C2F2	24009	61863	185836	24239	50243	-172498
	380C2F3	24053	59886	183002	24245	49759	-172205
	RTG	0	0	0	9449	18814	-63165
NL3/4	GW / opgw	0	0	0	0	0	0
Construction/maintenance, +5°C	150C1F1	0	0	0	0	0	0
Permanent loads yg= 1.2	150C1F2	0	0	0	0	0	0
Wind angle: -45°	150C1F3	0	0	0	0	0	0
	380C2F1	23414	48340	162999	23455	44761	-161246
	380C2F2	23421	47913	162685	23456	44642	-161230
	380C2F3	23428	47381	162329	23457	44492	-161213
	RTG	0	0	0	6950	13020	-47215
NL3/1a	GW / opgw	0	0	0	0	0	0
Wind, 10°C	150C1F1	0	0	0	0	0	0
Permanent loads yg= 0.9	150C1F2	0	0	0	0	0	0
Wind angle: 0°	150C1F3	0	0	0	0	0	0
	380C2F1	15683	31540	112657	15683	31540	-112657
	380C2F2	15684	31432	112626	15684	31432	-112626
	380C2F3	15685	31296	112592	15685	31296	-112592
	RTG	0	0	0	4251	8487	-30473
NL3/1b	GW / opgw	0	0	0	0	0	0
Wind, -20°C	150C1F1	0	0	0	0	0	0
Permanent loads yg= 0.9	150C1F2	0	0	0	0	0	0
Wind angle: 0°	150C1F3	0	0	0	0	0	0
	380C2F1	15858	34737	128089	15858	34737	-128089
	380C2F2	15858	34707	128091	15858	34707	-128091
	380C2F3	15858	34669	128094	15858	34669	-128094
	RTG	0	0	0	4289	9176	-33875

NL3/3	GW / opgw	0	0	0	0	0	0
Wind, -5°C	150C1F1	0	0	0	0	0	0
Permanent loads yg= 0.9	150C1F2	0	0	0	0	0	0
Wind angle: 0°	150C1F3	0	0	0	0	0	0
	380C2F1	19114	38871	140728	19114	38871	-140728
	380C2F2	19115	38782	140716	19115	38782	-140716
	380C2F3	19115	38670	140704	19115	38670	-140704
	RTG	0	0	0	8075	15219	-54909
NL3/4	GW / opgw	0	0	0	0	0	0
Construction/maintenance, +5°C	150C1F1	0	0	0	0	0	0
Permanent loads yg= 0.9	150C1F2	0	0	0	0	0	0
Wind angle: 0°	150C1F3	0	0	0	0	0	0
	380C2F1	18307	35473	130833	18307	35473	-130833
	380C2F2	18307	35443	130836	18307	35443	-130836
	380C2F3	18307	35405	130840	18307	35405	-130840
	RTG	0	0	0	5555	10552	-39010
NL3/1a	GW / opgw	0	0	0	0	0	0
Wind, 10°C	150C1F1	0	0	0	0	0	0
Permanent loads yg= 0.9	150C1F2	0	0	0	0	0	0
Wind angle: 45°	150C1F3	0	0	0	0	0	0
	380C2F1	15611	36325	116711	15256	54897	-148299
	380C2F2	15621	35779	116063	15294	52601	-143899
	380C2F3	15633	35106	115313	15344	49746	-138533
	RTG	0	0	0	4153	13867	-38323
NL3/1b	GW / opgw	0	0	0	0	0	0
Wind, -20°C	150C1F1	0	0	0	0	0	0
Permanent loads yg= 0.9	150C1F2	0	0	0	0	0	0
Wind angle: 45°	150C1F3	0	0	0	0	0	0
	380C2F1	15849	35938	128324	15779	40001	-131890
	380C2F2	15851	35810	128273	15789	39499	-131299
	380C2F3	15852	35650	128217	15802	38880	-130615
	RTG	0	0	0	4273	10392	-34654
NL3/3	GW / opgw	0	0	0	0	0	0
Wind, -5°C	150C1F1	0	0	0	0	0	0
Permanent loads yg= 0.9	150C1F2	0	0	0	0	0	0
Wind angle: 45°	150C1F3	0	0	0	0	0	0
	380C2F1	19066	42646	142958	18766	56850	-163559
	380C2F2	19073	42226	142583	18803	55070	-160494
	380C2F3	19081	41705	142153	18851	52870	-156828
	RTG	0	0	0	7934	22809	-63968
NL3/4	GW / opgw	0	0	0	0	0	0
Construction/maintenance, +5°C	150C1F1	0	0	0	0	0	0
Permanent loads yg= 0.9	150C1F2	0	0	0	0	0	0
Wind angle: 45°	150C1F3	0	0	0	0	0	0
	380C2F1	18300	36644	130955	18248	40464	-133611
	380C2F2	18301	36520	130922	18256	40000	-133158
	380C2F3	18302	36366	130886	18265	39425	-132638
	RTG	0	0	0	5544	11683	-39471
NL3/1a	GW / opgw	0	0	0	0	0	0
Wind, 10°C	150C1F1	0	0	0	0	0	0
Permanent loads yg= 0.9	150C1F2	0	0	0	0	0	0
Wind angle: 90°	150C1F3	0	0	0	0	0	0
	380C2F1	15142	62722	163689	15142	62722	-163689
	380C2F2	15182	59754	157796	15182	59754	-157796
	380C2F3	15238	56038	150511	15238	56038	-150511
	RTG	0	0	0	4124	15702	-41894
NL3/1b	GW / opgw	0	0	0	0	0	0
Wind, -20°C	150C1F1	0	0	0	0	0	0
Permanent loads yg= 0.9	150C1F2	0	0	0	0	0	0
Wind angle: 90°	150C1F3	0	0	0	0	0	0
	380C2F1	15740	41750	134173	15740	41750	-134173
	380C2F2	15755	41078	133261	15755	41078	-133261
	380C2F3	15773	40252	132198	15773	40252	-132198
	RTG	0	0	0	4265	10791	-35136
NL3/3	GW / opgw	0	0	0	0	0	0
Wind, -5°C	150C1F1	0	0	0	0	0	0
Permanent loads yg= 0.9	150C1F2	0	0	0	0	0	0
Wind angle: 90°	150C1F3	0	0	0	0	0	0
	380C2F1	18644	63002	174651	18644	63002	-174651
	380C2F2	18689	60654	170341	18689	60654	-170341
	380C2F3	18747	57740	165120	18747	57740	-165120
	RTG	0	0	0	7885	25369	-68357

NL3/4	GW / opgw	0	0	0	0	0	0
Construction/maintenance, +5°C	150C1F1	0	0	0	0	0	0
Permanent loads yg= 0.9	150C1F2	0	0	0	0	0	0
Wind angle: 90°	150C1F3	0	0	0	0	0	0
	380C2F1	18218	42076	135378	18218	42076	-135378
	380C2F2	18230	41459	134669	18230	41459	-134669
	380C2F3	18244	40697	133848	18244	40697	-133848
	RTG	0	0	0	5538	12039	-39789
NL3/1a	GW / opgw	0	0	0	0	0	0
Wind, 10°C	150C1F1	0	0	0	0	0	0
Permanent loads yg= 0.9	150C1F2	0	0	0	0	0	0
Wind angle: -45°	150C1F3	0	0	0	0	0	0
	380C2F1	15256	54897	148299	15611	36325	-116711
	380C2F2	15294	52601	143899	15621	35779	-116063
	380C2F3	15344	49746	138533	15633	35106	-115313
	RTG	0	0	0	4236	9590	-31315
NL3/1b	GW / opgw	0	0	0	0	0	0
Wind, -20°C	150C1F1	0	0	0	0	0	0
Permanent loads yg= 0.9	150C1F2	0	0	0	0	0	0
Wind angle: -45°	150C1F3	0	0	0	0	0	0
	380C2F1	15779	40001	131890	15849	35938	-128324
	380C2F2	15789	39499	131299	15851	35810	-128273
	380C2F3	15802	38880	130615	15852	35650	-128217
	RTG	0	0	0	4287	9457	-33917
NL3/3	GW / opgw	0	0	0	0	0	0
Wind, -5°C	150C1F1	0	0	0	0	0	0
Permanent loads yg= 0.9	150C1F2	0	0	0	0	0	0
Wind angle: -45°	150C1F3	0	0	0	0	0	0
	380C2F1	18766	56850	163559	19066	42646	-142958
	380C2F2	18803	55070	160494	19073	42226	-142583
	380C2F3	18851	52870	156828	19081	41705	-142153
	RTG	0	0	0	8055	16836	-55784
NL3/4	GW / opgw	0	0	0	0	0	0
Construction/maintenance, +5°C	150C1F1	0	0	0	0	0	0
Permanent loads yg= 0.9	150C1F2	0	0	0	0	0	0
Wind angle: -45°	150C1F3	0	0	0	0	0	0
	380C2F1	18248	40464	133611	18300	36644	-130955
	380C2F2	18256	40000	133158	18301	36520	-130922
	380C2F3	18265	39425	132638	18302	36366	-130886
	RTG	0	0	0	5553	10824	-39018

ZWW4HK450+5

Loadcases for tower strength (Special limit state)

		Ahead			Back		
Loadcase according to 50341-3-15	Att. Point	Vertical [N]	Transversal [N]	Longitudinal [N]	Vertical [N]	Transversal [N]	Longitudinal [N]
NL3/1a	GW / opgw	0	0	0	0	0	0
Wind, 10°C	150C1F1	0	0	0	0	0	0
Permanent loads yg= 1.2	150C1F2	0	0	0	0	0	0
Wind angle: 0°	150C1F3	0	0	0	0	0	0
	380C2F1	20845	39849	143664	20845	39849	-143664
	380C2F2	20846	39745	143649	20846	39745	-143649
	380C2F3	20847	39615	143635	20847	39615	-143635
	RTG	0	0	0	5652	10784	-39049
NL3/1b	GW / opgw	0	0	0	0	0	0
Wind, -20°C	150C1F1	0	0	0	0	0	0
Permanent loads yg= 1.2	150C1F2	0	0	0	0	0	0
Wind angle: 0°	150C1F3	0	0	0	0	0	0
	380C2F1	21037	43563	161026	21037	43563	-161026
	380C2F2	21037	43533	161029	21037	43533	-161029
	380C2F3	21037	43496	161034	21037	43496	-161034
	RTG	0	0	0	5695	11607	-42948
NL3/3	GW / opgw	0	0	0	0	0	0
Wind, -5°C	150C1F1	0	0	0	0	0	0
Permanent loads yg= 1.2	150C1F2	0	0	0	0	0	0
Wind angle: 0°	150C1F3	0	0	0	0	0	0
	380C2F1	24270	47066	171312	24270	47066	-171312
	380C2F2	24271	46980	171308	24271	46980	-171308
	380C2F3	24271	46871	171307	24271	46871	-171307
	RTG	0	0	0	9465	17256	-62512
NL3/4	GW / opgw	0	0	0	0	0	0
Construction/maintenance, +5°C	150C1F1	0	0	0	0	0	0
Permanent loads yg= 1.2	150C1F2	0	0	0	0	0	0
Wind angle: 0°	150C1F3	0	0	0	0	0	0
	380C2F1	23460	43619	161233	23460	43619	-161233
	380C2F2	23460	43589	161238	23460	43589	-161238
	380C2F3	23460	43552	161244	23460	43552	-161244
	RTG	0	0	0	6951	12753	-47225
NL3/1a	GW / opgw	0	0	0	0	0	0
Wind, 10°C	150C1F1	0	0	0	0	0	0
Permanent loads yg= 1.2	150C1F2	0	0	0	0	0	0
Wind angle: 45°	150C1F3	0	0	0	0	0	0
	380C2F1	20791	44249	146283	20463	60742	-170104
	380C2F2	20799	43760	145843	20503	58683	-166588
	380C2F3	20808	43152	145339	20554	56136	-162373
	RTG	0	0	0	5567	15600	-44790
NL3/1b	GW / opgw	0	0	0	0	0	0
Wind, -20°C	150C1F1	0	0	0	0	0	0
Permanent loads yg= 1.2	150C1F2	0	0	0	0	0	0
Wind angle: 45°	150C1F3	0	0	0	0	0	0
	380C2F1	21031	44721	161101	20979	48436	-163369
	380C2F2	21032	44599	161074	20987	47988	-162976
	380C2F3	21033	44447	161047	20996	47432	-162525
	RTG	0	0	0	5683	12741	-43421
NL3/3	GW / opgw	0	0	0	0	0	0
Wind, -5°C	150C1F1	0	0	0	0	0	0
Permanent loads yg= 1.2	150C1F2	0	0	0	0	0	0
Wind angle: 45°	150C1F3	0	0	0	0	0	0
	380C2F1	24233	50632	172757	23974	63465	-188237
	380C2F2	24239	50243	172498	24009	61863	-185836
	380C2F3	24245	49759	172205	24053	59886	-183002
	RTG	0	0	0	9338	24412	-69949
NL3/4	GW / opgw	0	0	0	0	0	0
Construction/maintenance, +5°C	150C1F1	0	0	0	0	0	0
Permanent loads yg= 1.2	150C1F2	0	0	0	0	0	0
Wind angle: 45°	150C1F3	0	0	0	0	0	0
	380C2F1	23455	44761	161246	23414	48340	-162999
	380C2F2	23456	44642	161230	23421	47913	-162685
	380C2F3	23457	44492	161213	23428	47381	-162329
	RTG	0	0	0	6943	13839	-47514
NL3/1a	GW / opgw	0	0	0	0	0	0
Wind, 10°C	150C1F1	0	0	0	0	0	0
Permanent loads yg= 1.2	150C1F2	0	0	0	0	0	0
Wind angle: 90°	150C1F3	0	0	0	0	0	0
	380C2F1	20335	67836	182764	20335	67836	-182764
	380C2F2	20382	65131	177855	20382	65131	-177855
	380C2F3	20443	61769	171890	20443	61769	-171890
	RTG	0	0	0	5536	17249	-47663

NL3/1b	GW / opgw	0	0	0	0	0	0
Wind, -20°C	150C1F1	0	0	0	0	0	0
Permanent loads yg= 1.2	150C1F2	0	0	0	0	0	0
Wind angle: 90°	150C1F3	0	0	0	0	0	0
	380C2F1	20948	49989	164916	20948	49989	-164916
	380C2F2	20960	49395	164293	20960	49395	-164293
	380C2F3	20974	48660	163576	20974	48660	-163576
	RTG	0	0	0	5677	13098	-43746
NL3/3	GW / opgw	0	0	0	0	0	0
Wind, -5°C	150C1F1	0	0	0	0	0	0
Permanent loads yg= 1.2	150C1F2	0	0	0	0	0	0
Wind angle: 90°	150C1F3	0	0	0	0	0	0
	380C2F1	23855	69027	197127	23855	69027	-197127
	380C2F2	23900	66899	193637	23900	66899	-193637
	380C2F3	23957	64267	189469	23957	64267	-189469
	RTG	0	0	0	9290	26816	-73757
NL3/4	GW / opgw	0	0	0	0	0	0
Construction/maintenance, +5°C	150C1F1	0	0	0	0	0	0
Permanent loads yg= 1.2	150C1F2	0	0	0	0	0	0
Wind angle: 90°	150C1F3	0	0	0	0	0	0
	380C2F1	23391	49812	164244	23391	49812	-164244
	380C2F2	23400	49250	163740	23400	49250	-163740
	380C2F3	23411	48553	163164	23411	48553	-163164
	RTG	0	0	0	6938	14170	-47741
NL3/1a	GW / opgw	0	0	0	0	0	0
Wind, 10°C	150C1F1	0	0	0	0	0	0
Permanent loads yg= 1.2	150C1F2	0	0	0	0	0	0
Wind angle: -45°	150C1F3	0	0	0	0	0	0
	380C2F1	20463	60742	170104	20791	44249	-146283
	380C2F2	20503	58683	166588	20799	43760	-145843
	380C2F3	20554	56136	162373	20808	43152	-145339
	RTG	0	0	0	5640	11806	-39586
NL3/1b	GW / opgw	0	0	0	0	0	0
Wind, -20°C	150C1F1	0	0	0	0	0	0
Permanent loads yg= 1.2	150C1F2	0	0	0	0	0	0
Wind angle: -45°	150C1F3	0	0	0	0	0	0
	380C2F1	20979	48436	163369	21031	44721	-161101
	380C2F2	20987	47988	162976	21032	44599	-161074
	380C2F3	20996	47432	162525	21033	44447	-161047
	RTG	0	0	0	5693	11879	-42957
NL3/3	GW / opgw	0	0	0	0	0	0
Wind, -5°C	150C1F1	0	0	0	0	0	0
Permanent loads yg= 1.2	150C1F2	0	0	0	0	0	0
Wind angle: -45°	150C1F3	0	0	0	0	0	0
	380C2F1	23974	63465	188237	24233	50632	-172757
	380C2F2	24009	61863	185836	24239	50243	-172498
	380C2F3	24053	59886	183002	24245	49759	-172205
	RTG	0	0	0	9449	18814	-63165
NL3/4	GW / opgw	0	0	0	0	0	0
Construction/maintenance, +5°C	150C1F1	0	0	0	0	0	0
Permanent loads yg= 1.2	150C1F2	0	0	0	0	0	0
Wind angle: -45°	150C1F3	0	0	0	0	0	0
	380C2F1	23414	48340	162999	23455	44761	-161246
	380C2F2	23421	47913	162685	23456	44642	-161230
	380C2F3	23428	47381	162329	23457	44492	-161213
	RTG	0	0	0	6950	13020	-47215
NL3/1a	GW / opgw	0	0	0	0	0	0
Wind, 10°C	150C1F1	0	0	0	0	0	0
Permanent loads yg= 0.9	150C1F2	0	0	0	0	0	0
Wind angle: 0°	150C1F3	0	0	0	0	0	0
	380C2F1	15683	31540	112657	15683	31540	-112657
	380C2F2	15684	31432	112626	15684	31432	-112626
	380C2F3	15685	31296	112592	15685	31296	-112592
	RTG	0	0	0	4251	8487	-30473
NL3/1b	GW / opgw	0	0	0	0	0	0
Wind, -20°C	150C1F1	0	0	0	0	0	0
Permanent loads yg= 0.9	150C1F2	0	0	0	0	0	0
Wind angle: 0°	150C1F3	0	0	0	0	0	0
	380C2F1	15858	34737	128089	15858	34737	-128089
	380C2F2	15858	34707	128091	15858	34707	-128091
	380C2F3	15858	34669	128094	15858	34669	-128094
	RTG	0	0	0	4289	9176	-33875

NL3/3	GW / opgw	0	0	0	0	0	0
Wind, -5°C	150C1F1	0	0	0	0	0	0
Permanent loads yg= 0.9	150C1F2	0	0	0	0	0	0
Wind angle: 0°	150C1F3	0	0	0	0	0	0
	380C2F1	19114	38871	140728	19114	38871	-140728
	380C2F2	19115	38782	140716	19115	38782	-140716
	380C2F3	19115	38670	140704	19115	38670	-140704
	RTG	0	0	0	8075	15219	-54909
NL3/4	GW / opgw	0	0	0	0	0	0
Construction/maintenance, +5°C	150C1F1	0	0	0	0	0	0
Permanent loads yg= 0.9	150C1F2	0	0	0	0	0	0
Wind angle: 0°	150C1F3	0	0	0	0	0	0
	380C2F1	18307	35473	130833	18307	35473	-130833
	380C2F2	18307	35443	130836	18307	35443	-130836
	380C2F3	18307	35405	130840	18307	35405	-130840
	RTG	0	0	0	5555	10552	-39010
NL3/1a	GW / opgw	0	0	0	0	0	0
Wind, 10°C	150C1F1	0	0	0	0	0	0
Permanent loads yg= 0.9	150C1F2	0	0	0	0	0	0
Wind angle: 45°	150C1F3	0	0	0	0	0	0
	380C2F1	15611	36325	116711	15256	54897	-148299
	380C2F2	15621	35779	116063	15294	52601	-143899
	380C2F3	15633	35106	115313	15344	49746	-138533
	RTG	0	0	0	4153	13867	-38323
NL3/1b	GW / opgw	0	0	0	0	0	0
Wind, -20°C	150C1F1	0	0	0	0	0	0
Permanent loads yg= 0.9	150C1F2	0	0	0	0	0	0
Wind angle: 45°	150C1F3	0	0	0	0	0	0
	380C2F1	15849	35938	128324	15779	40001	-131890
	380C2F2	15851	35810	128273	15789	39499	-131299
	380C2F3	15852	35650	128217	15802	38880	-130615
	RTG	0	0	0	4273	10392	-34654
NL3/3	GW / opgw	0	0	0	0	0	0
Wind, -5°C	150C1F1	0	0	0	0	0	0
Permanent loads yg= 0.9	150C1F2	0	0	0	0	0	0
Wind angle: 45°	150C1F3	0	0	0	0	0	0
	380C2F1	19066	42646	142958	18766	56850	-163559
	380C2F2	19073	42226	142583	18803	55070	-160494
	380C2F3	19081	41705	142153	18851	52870	-156828
	RTG	0	0	0	7934	22809	-63968
NL3/4	GW / opgw	0	0	0	0	0	0
Construction/maintenance, +5°C	150C1F1	0	0	0	0	0	0
Permanent loads yg= 0.9	150C1F2	0	0	0	0	0	0
Wind angle: 45°	150C1F3	0	0	0	0	0	0
	380C2F1	18300	36644	130955	18248	40464	-133611
	380C2F2	18301	36520	130922	18256	40000	-133158
	380C2F3	18302	36366	130886	18265	39425	-132638
	RTG	0	0	0	5544	11683	-39471
NL3/1a	GW / opgw	0	0	0	0	0	0
Wind, 10°C	150C1F1	0	0	0	0	0	0
Permanent loads yg= 0.9	150C1F2	0	0	0	0	0	0
Wind angle: 90°	150C1F3	0	0	0	0	0	0
	380C2F1	15142	62722	163689	15142	62722	-163689
	380C2F2	15182	59754	157796	15182	59754	-157796
	380C2F3	15238	56038	150511	15238	56038	-150511
	RTG	0	0	0	4124	15702	-41894
NL3/1b	GW / opgw	0	0	0	0	0	0
Wind, -20°C	150C1F1	0	0	0	0	0	0
Permanent loads yg= 0.9	150C1F2	0	0	0	0	0	0
Wind angle: 90°	150C1F3	0	0	0	0	0	0
	380C2F1	15740	41750	134173	15740	41750	-134173
	380C2F2	15755	41078	133261	15755	41078	-133261
	380C2F3	15773	40252	132198	15773	40252	-132198
	RTG	0	0	0	4265	10791	-35136
NL3/3	GW / opgw	0	0	0	0	0	0
Wind, -5°C	150C1F1	0	0	0	0	0	0
Permanent loads yg= 0.9	150C1F2	0	0	0	0	0	0
Wind angle: 90°	150C1F3	0	0	0	0	0	0
	380C2F1	18644	63002	174651	18644	63002	-174651
	380C2F2	18689	60654	170341	18689	60654	-170341
	380C2F3	18747	57740	165120	18747	57740	-165120
	RTG	0	0	0	7885	25369	-68357

NL3/4	GW / opgw	0	0	0	0	0	0
Construction/maintenance, +5°C	150C1F1	0	0	0	0	0	0
Permanent loads yg= 0.9	150C1F2	0	0	0	0	0	0
Wind angle: 90°	150C1F3	0	0	0	0	0	0
	380C2F1	18218	42076	135378	18218	42076	-135378
	380C2F2	18230	41459	134669	18230	41459	-134669
	380C2F3	18244	40697	133848	18244	40697	-133848
	RTG	0	0	0	5538	12039	-39789
NL3/1a	GW / opgw	0	0	0	0	0	0
Wind, 10°C	150C1F1	0	0	0	0	0	0
Permanent loads yg= 0.9	150C1F2	0	0	0	0	0	0
Wind angle: -45°	150C1F3	0	0	0	0	0	0
	380C2F1	15256	54897	148299	15611	36325	-116711
	380C2F2	15294	52601	143899	15621	35779	-116063
	380C2F3	15344	49746	138533	15633	35106	-115313
	RTG	0	0	0	4236	9590	-31315
NL3/1b	GW / opgw	0	0	0	0	0	0
Wind, -20°C	150C1F1	0	0	0	0	0	0
Permanent loads yg= 0.9	150C1F2	0	0	0	0	0	0
Wind angle: -45°	150C1F3	0	0	0	0	0	0
	380C2F1	15779	40001	131890	15849	35938	-128324
	380C2F2	15789	39499	131299	15851	35810	-128273
	380C2F3	15802	38880	130615	15852	35650	-128217
	RTG	0	0	0	4287	9457	-33917
NL3/3	GW / opgw	0	0	0	0	0	0
Wind, -5°C	150C1F1	0	0	0	0	0	0
Permanent loads yg= 0.9	150C1F2	0	0	0	0	0	0
Wind angle: -45°	150C1F3	0	0	0	0	0	0
	380C2F1	18766	56850	163559	19066	42646	-142958
	380C2F2	18803	55070	160494	19073	42226	-142583
	380C2F3	18851	52870	156828	19081	41705	-142153
	RTG	0	0	0	8055	16836	-55784
NL3/4	GW / opgw	0	0	0	0	0	0
Construction/maintenance, +5°C	150C1F1	0	0	0	0	0	0
Permanent loads yg= 0.9	150C1F2	0	0	0	0	0	0
Wind angle: -45°	150C1F3	0	0	0	0	0	0
	380C2F1	18248	40464	133611	18300	36644	-130955
	380C2F2	18256	40000	133158	18301	36520	-130922
	380C2F3	18265	39425	132638	18302	36366	-130886
	RTG	0	0	0	5553	10824	-39018

ZWW4HK450+5

Loadcases for tower strength (Special limit state)

		Ahead			Back		
Loadcase according to 50341-3-15	Att. Point	Vertical [N]	Transversal [N]	Longitudinal [N]	Vertical [N]	Transversal [N]	Longitudinal [N]
NL3/1a	GW / opgw	2829	5483	19564	0	0	0
Wind, 10°C	150C1F1	10423	19924	71832	0	0	0
Permanent loads yg= 1.2	150C1F2	10423	19873	71825	0	0	0
Wind angle: 0°	150C1F3	10423	19807	71818	0	0	0
	380C2F1	0	0	0	20845	39849	-143664
	380C2F2	0	0	0	20846	39745	-143649
	380C2F3	0	0	0	20847	39615	-143635
	RTG	0	0	0	5652	10784	-39049
NL3/1b	GW / opgw	2853	5873	21643	0	0	0
Wind, -20°C	150C1F1	10519	21782	80513	0	0	0
Permanent loads yg= 1.2	150C1F2	10519	21767	80515	0	0	0
Wind angle: 0°	150C1F3	10519	21748	80517	0	0	0
	380C2F1	0	0	0	21037	43563	-161026
	380C2F2	0	0	0	21037	43533	-161029
	380C2F3	0	0	0	21037	43496	-161034
	RTG	0	0	0	5695	11607	-42948
NL3/3	GW / opgw	4732	8773	31324	0	0	0
Wind, -5°C	150C1F1	12135	23533	85656	0	0	0
Permanent loads yg= 1.2	150C1F2	12135	23490	85654	0	0	0
Wind angle: 0°	150C1F3	12136	23435	85653	0	0	0
	380C2F1	0	0	0	24270	47066	-171312
	380C2F2	0	0	0	24271	46980	-171308
	380C2F3	0	0	0	24271	46871	-171307
	RTG	0	0	0	9465	17256	-62512
NL3/4	GW / opgw	3480	6410	23646	0	0	0
Construction/maintenance, +5°C	150C1F1	11730	21809	80617	0	0	0
Permanent loads yg= 1.2	150C1F2	11730	21795	80619	0	0	0
Wind angle: 0°	150C1F3	11730	21776	80622	0	0	0
	380C2F1	0	0	0	23460	43619	-161233
	380C2F2	0	0	0	23460	43589	-161238
	380C2F3	0	0	0	23460	43552	-161244
	RTG	0	0	0	6951	12753	-47225
NL3/1a	GW / opgw	2817	6317	20228	0	0	0
Wind, 10°C	150C1F1	10395	22125	73141	0	0	0
Permanent loads yg= 1.2	150C1F2	10399	21880	72921	0	0	0
Wind angle: 45°	150C1F3	10404	21576	72669	0	0	0
	380C2F1	0	0	0	20463	60742	-170104
	380C2F2	0	0	0	20503	58683	-166588
	380C2F3	0	0	0	20554	56136	-162373
	RTG	0	0	0	5567	15600	-44790
NL3/1b	GW / opgw	2851	6084	21678	0	0	0
Wind, -20°C	150C1F1	10515	22360	80550	0	0	0
Permanent loads yg= 1.2	150C1F2	10516	22300	80537	0	0	0
Wind angle: 45°	150C1F3	10516	22223	80524	0	0	0
	380C2F1	0	0	0	20979	48436	-163369
	380C2F2	0	0	0	20987	47988	-162976
	380C2F3	0	0	0	20996	47432	-162525
	RTG	0	0	0	5683	12741	-43421
NL3/3	GW / opgw	4714	10037	32168	0	0	0
Wind, -5°C	150C1F1	12117	25316	86379	0	0	0
Permanent loads yg= 1.2	150C1F2	12119	25121	86249	0	0	0
Wind angle: 45°	150C1F3	12123	24879	86102	0	0	0
	380C2F1	0	0	0	23974	63465	-188237
	380C2F2	0	0	0	24009	61863	-185836
	380C2F3	0	0	0	24053	59886	-183002
	RTG	0	0	0	9338	24412	-69949
NL3/4	GW / opgw	3479	6615	23658	0	0	0
Construction/maintenance, +5°C	150C1F1	11727	22380	80623	0	0	0
Permanent loads yg= 1.2	150C1F2	11728	22321	80615	0	0	0
Wind angle: 45°	150C1F3	11728	22246	80607	0	0	0
	380C2F1	0	0	0	23414	48340	-162999
	380C2F2	0	0	0	23421	47913	-162685
	380C2F3	0	0	0	23428	47381	-162329
	RTG	0	0	0	6943	13839	-47514
NL3/1a	GW / opgw	2737	10870	28061	0	0	0
Wind, 10°C	150C1F1	10167	33918	91382	0	0	0
Permanent loads yg= 1.2	150C1F2	10191	32566	88927	0	0	0
Wind angle: 90°	150C1F3	10222	30885	85945	0	0	0
	380C2F1	0	0	0	20335	67836	-182764
	380C2F2	0	0	0	20382	65131	-177855
	380C2F3	0	0	0	20443	61769	-171890
	RTG	0	0	0	5536	17249	-47663

NL3/1b	GW / opgw	2834	7092	22624	0	0	0
Wind, -20°C	150C1F1	10474	24994	82458	0	0	0
Permanent loads yg= 1.2	150C1F2	10480	24697	82146	0	0	0
Wind angle: 90°	150C1F3	10487	24330	81788	0	0	0
	380C2F1	0	0	0	20948	49989	-164916
	380C2F2	0	0	0	20960	49395	-164293
	380C2F3	0	0	0	20974	48660	-163576
	RTG	0	0	0	5677	13098	-43746
NL3/3	GW / opgw	4589	16717	42628	0	0	0
Wind, -5°C	150C1F1	11927	34514	98564	0	0	0
Permanent loads yg= 1.2	150C1F2	11950	33449	96818	0	0	0
Wind angle: 90°	150C1F3	11978	32133	94734	0	0	0
	380C2F1	0	0	0	23855	69027	-197127
	380C2F2	0	0	0	23900	66899	-193637
	380C2F3	0	0	0	23957	64267	-189469
	RTG	0	0	0	9290	26816	-73757
NL3/4	GW / opgw	3466	7548	24324	0	0	0
Construction/maintenance, +5°C	150C1F1	11695	24906	82122	0	0	0
Permanent loads yg= 1.2	150C1F2	11700	24625	81870	0	0	0
Wind angle: 90°	150C1F3	11706	24276	81582	0	0	0
	380C2F1	0	0	0	23391	49812	-164244
	380C2F2	0	0	0	23400	49250	-163740
	380C2F3	0	0	0	23411	48553	-163164
	RTG	0	0	0	6938	14170	-47741
NL3/1a	GW / opgw	2757	9522	25485	0	0	0
Wind, 10°C	150C1F1	10232	30371	85052	0	0	0
Permanent loads yg= 1.2	150C1F2	10252	29342	83294	0	0	0
Wind angle: -45°	150C1F3	10277	28068	81186	0	0	0
	380C2F1	0	0	0	20791	44249	-146283
	380C2F2	0	0	0	20799	43760	-145843
	380C2F3	0	0	0	20808	43152	-145339
	RTG	0	0	0	5640	11806	-39586
NL3/1b	GW / opgw	2840	6791	22252	0	0	0
Wind, -20°C	150C1F1	10489	24218	81685	0	0	0
Permanent loads yg= 1.2	150C1F2	10493	23994	81488	0	0	0
Wind angle: -45°	150C1F3	10498	23716	81263	0	0	0
	380C2F1	0	0	0	21031	44721	-161101
	380C2F2	0	0	0	21032	44599	-161074
	380C2F3	0	0	0	21033	44447	-161047
	RTG	0	0	0	5693	11879	-42957
NL3/3	GW / opgw	4620	14747	39156	0	0	0
Wind, -5°C	150C1F1	11987	31733	94119	0	0	0
Permanent loads yg= 1.2	150C1F2	12005	30931	92918	0	0	0
Wind angle: -45°	150C1F3	12026	29943	91501	0	0	0
	380C2F1	0	0	0	24233	50632	-172757
	380C2F2	0	0	0	24239	50243	-172498
	380C2F3	0	0	0	24245	49759	-172205
	RTG	0	0	0	9449	18814	-63165
NL3/4	GW / opgw	3470	7274	24054	0	0	0
Construction/maintenance, +5°C	150C1F1	11707	24170	81500	0	0	0
Permanent loads yg= 1.2	150C1F2	11710	23956	81343	0	0	0
Wind angle: -45°	150C1F3	11714	23691	81165	0	0	0
	380C2F1	0	0	0	23455	44761	-161246
	380C2F2	0	0	0	23456	44642	-161230
	380C2F3	0	0	0	23457	44492	-161213
	RTG	0	0	0	6950	13020	-47215
NL3/1a	GW / opgw	2128	4338	15293	0	0	0
Wind, 10°C	150C1F1	7841	15770	56329	0	0	0
Permanent loads yg= 0.9	150C1F2	7842	15716	56313	0	0	0
Wind angle: 0°	150C1F3	7842	15648	56296	0	0	0
	380C2F1	0	0	0	15683	31540	-112657
	380C2F2	0	0	0	15684	31432	-112626
	380C2F3	0	0	0	15685	31296	-112592
	RTG	0	0	0	4251	8487	-30473
NL3/1b	GW / opgw	2149	4655	17097	0	0	0
Wind, -20°C	150C1F1	7929	17369	64044	0	0	0
Permanent loads yg= 0.9	150C1F2	7929	17354	64045	0	0	0
Wind angle: 0°	150C1F3	7929	17335	64047	0	0	0
	380C2F1	0	0	0	15858	34737	-128089
	380C2F2	0	0	0	15858	34707	-128091
	380C2F3	0	0	0	15858	34669	-128094
	RTG	0	0	0	4289	9176	-33875

NL3/3	GW / opgw	4036	7757	27533	0	0	0
Wind, -5°C	150C1F1	9557	19436	70364	0	0	0
Permanent loads yg= 0.9	150C1F2	9557	19391	70358	0	0	0
Wind angle: 0°	150C1F3	9558	19335	70352	0	0	0
	380C2F1	0	0	0	19114	38871	-140728
	380C2F2	0	0	0	19115	38782	-140716
	380C2F3	0	0	0	19115	38670	-140704
	RTG	0	0	0	8075	15219	-54909
NL3/4	GW / opgw	2781	5310	19540	0	0	0
Construction/maintenance, +5°C	150C1F1	9153	17737	65416	0	0	0
Permanent loads yg= 0.9	150C1F2	9153	17722	65418	0	0	0
Wind angle: 0°	150C1F3	9153	17703	65420	0	0	0
	380C2F1	0	0	0	18307	35473	-130833
	380C2F2	0	0	0	18307	35443	-130836
	380C2F3	0	0	0	18307	35405	-130840
	RTG	0	0	0	5555	10552	-39010
NL3/1a	GW / opgw	2112	5258	16276	0	0	0
Wind, 10°C	150C1F1	7805	18162	58355	0	0	0
Permanent loads yg= 0.9	150C1F2	7811	17890	58031	0	0	0
Wind angle: 45°	150C1F3	7817	17553	57657	0	0	0
	380C2F1	0	0	0	15256	54897	-148299
	380C2F2	0	0	0	15294	52601	-143899
	380C2F3	0	0	0	15344	49746	-138533
	RTG	0	0	0	4153	13867	-38323
NL3/1b	GW / opgw	2147	4876	17168	0	0	0
Wind, -20°C	150C1F1	7925	17969	64162	0	0	0
Permanent loads yg= 0.9	150C1F2	7925	17905	64137	0	0	0
Wind angle: 45°	150C1F3	7926	17825	64109	0	0	0
	380C2F1	0	0	0	15779	40001	-131890
	380C2F2	0	0	0	15789	39499	-131299
	380C2F3	0	0	0	15802	38880	-130615
	RTG	0	0	0	4273	10392	-34654
NL3/3	GW / opgw	4015	9085	28615	0	0	0
Wind, -5°C	150C1F1	9533	21323	71479	0	0	0
Permanent loads yg= 0.9	150C1F2	9537	21113	71291	0	0	0
Wind angle: 45°	150C1F3	9541	20853	71076	0	0	0
	380C2F1	0	0	0	18766	56850	-163559
	380C2F2	0	0	0	18803	55070	-160494
	380C2F3	0	0	0	18851	52870	-156828
	RTG	0	0	0	7934	22809	-63968
NL3/4	GW / opgw	2779	5521	19573	0	0	0
Construction/maintenance, +5°C	150C1F1	9150	18322	65478	0	0	0
Permanent loads yg= 0.9	150C1F2	9151	18260	65461	0	0	0
Wind angle: 45°	150C1F3	9151	18183	65443	0	0	0
	380C2F1	0	0	0	18248	40464	-133611
	380C2F2	0	0	0	18256	40000	-133158
	380C2F3	0	0	0	18265	39425	-132638
	RTG	0	0	0	5544	11683	-39471
NL3/1a	GW / opgw	2036	10290	25900	0	0	0
Wind, 10°C	150C1F1	7571	31361	81845	0	0	0
Permanent loads yg= 0.9	150C1F2	7591	29877	78898	0	0	0
Wind angle: 90°	150C1F3	7619	28019	75256	0	0	0
	380C2F1	0	0	0	15142	62722	-163689
	380C2F2	0	0	0	15182	59754	-157796
	380C2F3	0	0	0	15238	56038	-150511
	RTG	0	0	0	4124	15702	-41894
NL3/1b	GW / opgw	2124	6003	18559	0	0	0
Wind, -20°C	150C1F1	7870	20875	67087	0	0	0
Permanent loads yg= 0.9	150C1F2	7877	20539	66630	0	0	0
Wind angle: 90°	150C1F3	7887	20126	66099	0	0	0
	380C2F1	0	0	0	15740	41750	-134173
	380C2F2	0	0	0	15755	41078	-133261
	380C2F3	0	0	0	15773	40252	-132198
	RTG	0	0	0	4265	10791	-35136
NL3/3	GW / opgw	3890	16165	40570	0	0	0
Wind, -5°C	150C1F1	9322	31501	87326	0	0	0
Permanent loads yg= 0.9	150C1F2	9344	30327	85170	0	0	0
Wind angle: 90°	150C1F3	9374	28870	82560	0	0	0
	380C2F1	0	0	0	18644	63002	-174651
	380C2F2	0	0	0	18689	60654	-170341
	380C2F3	0	0	0	18747	57740	-165120
	RTG	0	0	0	7885	25369	-68357

NL3/4	GW / opgw	2763	6523	20498	0	0	0
Construction/maintenance, +5°C	150C1F1	9109	21038	67689	0	0	0
Permanent loads yg= 0.9	150C1F2	9115	20729	67334	0	0	0
Wind angle: 90°	150C1F3	9122	20348	66924	0	0	0
	380C2F1	0	0	0	18218	42076	-135378
	380C2F2	0	0	0	18230	41459	-134669
	380C2F3	0	0	0	18244	40697	-133848
	RTG	0	0	0	5538	12039	-39789
NL3/1a	GW / opgw	2052	8836	22926	0	0	0
Wind, 10°C	150C1F1	7628	27448	74150	0	0	0
Permanent loads yg= 0.9	150C1F2	7647	26301	71949	0	0	0
Wind angle: -45°	150C1F3	7672	24873	69266	0	0	0
	380C2F1	0	0	0	15611	36325	-116711
	380C2F2	0	0	0	15621	35779	-116063
	380C2F3	0	0	0	15633	35106	-115313
	RTG	0	0	0	4236	9590	-31315
NL3/1b	GW / opgw	2132	5660	18032	0	0	0
Wind, -20°C	150C1F1	7889	20000	65945	0	0	0
Permanent loads yg= 0.9	150C1F2	7895	19750	65649	0	0	0
Wind angle: -45°	150C1F3	7901	19440	65307	0	0	0
	380C2F1	0	0	0	15849	35938	-128324
	380C2F2	0	0	0	15851	35810	-128273
	380C2F3	0	0	0	15852	35650	-128217
	RTG	0	0	0	4287	9457	-33917
NL3/3	GW / opgw	3918	14100	36743	0	0	0
Wind, -5°C	150C1F1	9383	28425	81780	0	0	0
Permanent loads yg= 0.9	150C1F2	9402	27535	80247	0	0	0
Wind angle: -45°	150C1F3	9425	26435	78414	0	0	0
	380C2F1	0	0	0	19066	42646	-142958
	380C2F2	0	0	0	19073	42226	-142583
	380C2F3	0	0	0	19081	41705	-142153
	RTG	0	0	0	8055	16836	-55784
NL3/4	GW / opgw	2769	6223	20135	0	0	0
Construction/maintenance, +5°C	150C1F1	9124	20232	66806	0	0	0
Permanent loads yg= 0.9	150C1F2	9128	20000	66579	0	0	0
Wind angle: -45°	150C1F3	9133	19712	66319	0	0	0
	380C2F1	0	0	0	18300	36644	-130955
	380C2F2	0	0	0	18301	36520	-130922
	380C2F3	0	0	0	18302	36366	-130886
	RTG	0	0	0	5553	10824	-39018

ZWW4HK450+5

Loadcases for tower strength (Special limit state)

		Ahead			Back		
Loadcase according to 50341-3-15	Att. Point	Vertical [N]	Transversal [N]	Longitudinal [N]	Vertical [N]	Transversal [N]	Longitudinal [N]
NL3/1a	GW / opgw	0	0	0	2829	5483	-19564
Wind, 10°C	150C1F1	0	0	0	10423	19924	-71832
Permanent loads yg= 1.2	150C1F2	0	0	0	10423	19873	-71825
Wind angle: 0°	150C1F3	0	0	0	10423	19807	-71818
	380C2F1	20845	39849	143664	20845	39849	-143664
	380C2F2	20846	39745	143649	20846	39745	-143649
	380C2F3	20847	39615	143635	20847	39615	-143635
	RTG	5652	10784	39049	5652	10784	-39049
NL3/1b	GW / opgw	0	0	0	2853	5873	-21643
Wind, -20°C	150C1F1	0	0	0	10519	21782	-80513
Permanent loads yg= 1.2	150C1F2	0	0	0	10519	21767	-80515
Wind angle: 0°	150C1F3	0	0	0	10519	21748	-80517
	380C2F1	21037	43563	161026	21037	43563	-161026
	380C2F2	21037	43533	161029	21037	43533	-161029
	380C2F3	21037	43496	161034	21037	43496	-161034
	RTG	5695	11607	42948	5695	11607	-42948
NL3/3	GW / opgw	0	0	0	4732	8773	-31324
Wind, -5°C	150C1F1	0	0	0	12135	23533	-85656
Permanent loads yg= 1.2	150C1F2	0	0	0	12135	23490	-85654
Wind angle: 0°	150C1F3	0	0	0	12136	23435	-85653
	380C2F1	24270	47066	171312	24270	47066	-171312
	380C2F2	24271	46980	171308	24271	46980	-171308
	380C2F3	24271	46871	171307	24271	46871	-171307
	RTG	9465	17256	62512	9465	17256	-62512
NL3/4	GW / opgw	0	0	0	3480	6410	-23646
Construction/maintenance, +5°C	150C1F1	0	0	0	11730	21809	-80617
Permanent loads yg= 1.2	150C1F2	0	0	0	11730	21795	-80619
Wind angle: 0°	150C1F3	0	0	0	11730	21776	-80622
	380C2F1	23460	43619	161233	23460	43619	-161233
	380C2F2	23460	43589	161238	23460	43589	-161238
	380C2F3	23460	43552	161244	23460	43552	-161244
	RTG	6951	12753	47225	6951	12753	-47225
NL3/1a	GW / opgw	0	0	0	2757	9522	-25485
Wind, 10°C	150C1F1	0	0	0	10232	30371	-85052
Permanent loads yg= 1.2	150C1F2	0	0	0	10252	29342	-83294
Wind angle: 45°	150C1F3	0	0	0	10277	28068	-81186
	380C2F1	20791	44249	146283	20463	60742	-170104
	380C2F2	20799	43760	145843	20503	58683	-166588
	380C2F3	20808	43152	145339	20554	56136	-162373
	RTG	5640	11806	39586	5567	15600	-44790
NL3/1b	GW / opgw	0	0	0	2840	6791	-22252
Wind, -20°C	150C1F1	0	0	0	10489	24218	-81685
Permanent loads yg= 1.2	150C1F2	0	0	0	10493	23994	-81488
Wind angle: 45°	150C1F3	0	0	0	10498	23716	-81263
	380C2F1	21031	44721	161101	20979	48436	-163369
	380C2F2	21032	44599	161074	20987	47988	-162976
	380C2F3	21033	44447	161047	20996	47432	-162525
	RTG	5693	11879	42957	5683	12741	-43421
NL3/3	GW / opgw	0	0	0	4620	14747	-39156
Wind, -5°C	150C1F1	0	0	0	11987	31733	-94119
Permanent loads yg= 1.2	150C1F2	0	0	0	12005	30931	-92918
Wind angle: 45°	150C1F3	0	0	0	12026	29943	-91501
	380C2F1	24233	50632	172757	23974	63465	-188237
	380C2F2	24239	50243	172498	24009	61863	-185836
	380C2F3	24245	49759	172205	24053	59886	-183002
	RTG	9449	18814	63165	9338	24412	-69949
NL3/4	GW / opgw	0	0	0	3470	7274	-24054
Construction/maintenance, +5°C	150C1F1	0	0	0	11707	24170	-81500
Permanent loads yg= 1.2	150C1F2	0	0	0	11710	23956	-81343
Wind angle: 45°	150C1F3	0	0	0	11714	23691	-81165
	380C2F1	23455	44761	161246	23414	48340	-162999
	380C2F2	23456	44642	161230	23421	47913	-162685
	380C2F3	23457	44492	161213	23428	47381	-162329
	RTG	6950	13020	47215	6943	13839	-47514
NL3/1a	GW / opgw	0	0	0	2737	10870	-28061
Wind, 10°C	150C1F1	0	0	0	10167	33918	-91382
Permanent loads yg= 1.2	150C1F2	0	0	0	10191	32566	-88927
Wind angle: 90°	150C1F3	0	0	0	10222	30885	-85945
	380C2F1	20335	67836	182764	20335	67836	-182764
	380C2F2	20382	65131	177855	20382	65131	-177855
	380C2F3	20443	61769	171890	20443	61769	-171890
	RTG	5536	17249	47663	5536	17249	-47663

NL3/1b	GW / opgw	0	0	0	2834	7092	-22624
Wind, -20°C	150C1F1	0	0	0	10474	24994	-82458
Permanent loads yg= 1.2	150C1F2	0	0	0	10480	24697	-82146
Wind angle: 90°	150C1F3	0	0	0	10487	24330	-81788
	380C2F1	20948	49989	164916	20948	49989	-164916
	380C2F2	20960	49395	164293	20960	49395	-164293
	380C2F3	20974	48660	163576	20974	48660	-163576
	RTG	5677	13098	43746	5677	13098	-43746
NL3/3	GW / opgw	0	0	0	4589	16717	-42628
Wind, -5°C	150C1F1	0	0	0	11927	34514	-98564
Permanent loads yg= 1.2	150C1F2	0	0	0	11950	33449	-96818
Wind angle: 90°	150C1F3	0	0	0	11978	32133	-94734
	380C2F1	23855	69027	197127	23855	69027	-197127
	380C2F2	23900	66899	193637	23900	66899	-193637
	380C2F3	23957	64267	189469	23957	64267	-189469
	RTG	9290	26816	73757	9290	26816	-73757
NL3/4	GW / opgw	0	0	0	3466	7548	-24324
Construction/maintenance, +5°C	150C1F1	0	0	0	11695	24906	-82122
Permanent loads yg= 1.2	150C1F2	0	0	0	11700	24625	-81870
Wind angle: 90°	150C1F3	0	0	0	11706	24276	-81582
	380C2F1	23391	49812	164244	23391	49812	-164244
	380C2F2	23400	49250	163740	23400	49250	-163740
	380C2F3	23411	48553	163164	23411	48553	-163164
	RTG	6938	14170	47741	6938	14170	-47741
NL3/1a	GW / opgw	0	0	0	2817	6317	-20228
Wind, 10°C	150C1F1	0	0	0	10395	22125	-73141
Permanent loads yg= 1.2	150C1F2	0	0	0	10399	21880	-72921
Wind angle: -45°	150C1F3	0	0	0	10404	21576	-72669
	380C2F1	20463	60742	170104	20791	44249	-146283
	380C2F2	20503	58683	166588	20799	43760	-145843
	380C2F3	20554	56136	162373	20808	43152	-145339
	RTG	5567	15600	44790	5640	11806	-39586
NL3/1b	GW / opgw	0	0	0	2851	6084	-21678
Wind, -20°C	150C1F1	0	0	0	10515	22360	-80550
Permanent loads yg= 1.2	150C1F2	0	0	0	10516	22300	-80537
Wind angle: -45°	150C1F3	0	0	0	10516	22223	-80524
	380C2F1	20979	48436	163369	21031	44721	-161101
	380C2F2	20987	47988	162976	21032	44599	-161074
	380C2F3	20996	47432	162525	21033	44447	-161047
	RTG	5683	12741	43421	5693	11879	-42957
NL3/3	GW / opgw	0	0	0	4714	10037	-32168
Wind, -5°C	150C1F1	0	0	0	12117	25316	-86379
Permanent loads yg= 1.2	150C1F2	0	0	0	12119	25121	-86249
Wind angle: -45°	150C1F3	0	0	0	12123	24879	-86102
	380C2F1	23974	63465	188237	24233	50632	-172757
	380C2F2	24009	61863	185836	24239	50243	-172498
	380C2F3	24053	59886	183002	24245	49759	-172205
	RTG	9338	24412	69949	9449	18814	-63165
NL3/4	GW / opgw	0	0	0	3479	6615	-23658
Construction/maintenance, +5°C	150C1F1	0	0	0	11727	22380	-80623
Permanent loads yg= 1.2	150C1F2	0	0	0	11728	22321	-80615
Wind angle: -45°	150C1F3	0	0	0	11728	22246	-80607
	380C2F1	23414	48340	162999	23455	44761	-161246
	380C2F2	23421	47913	162685	23456	44642	-161230
	380C2F3	23428	47381	162329	23457	44492	-161213
	RTG	6943	13839	47514	6950	13020	-47215
NL3/1a	GW / opgw	0	0	0	2128	4338	-15293
Wind, 10°C	150C1F1	0	0	0	7841	15770	-56329
Permanent loads yg= 0.9	150C1F2	0	0	0	7842	15716	-56313
Wind angle: 0°	150C1F3	0	0	0	7842	15648	-56296
	380C2F1	15683	31540	112657	15683	31540	-112657
	380C2F2	15684	31432	112626	15684	31432	-112626
	380C2F3	15685	31296	112592	15685	31296	-112592
	RTG	4251	8487	30473	4251	8487	-30473
NL3/1b	GW / opgw	0	0	0	2149	4655	-17097
Wind, -20°C	150C1F1	0	0	0	7929	17369	-64044
Permanent loads yg= 0.9	150C1F2	0	0	0	7929	17354	-64045
Wind angle: 0°	150C1F3	0	0	0	7929	17335	-64047
	380C2F1	15858	34737	128089	15858	34737	-128089
	380C2F2	15858	34707	128091	15858	34707	-128091
	380C2F3	15858	34669	128094	15858	34669	-128094
	RTG	4289	9176	33875	4289	9176	-33875

NL3/3	GW / opgw	0	0	0	4036	7757	-27533
Wind, -5°C	150C1F1	0	0	0	9557	19436	-70364
Permanent loads yg= 0.9	150C1F2	0	0	0	9557	19391	-70358
Wind angle: 0°	150C1F3	0	0	0	9558	19335	-70352
	380C2F1	19114	38871	140728	19114	38871	-140728
	380C2F2	19115	38782	140716	19115	38782	-140716
	380C2F3	19115	38670	140704	19115	38670	-140704
	RTG	8075	15219	54909	8075	15219	-54909
NL3/4	GW / opgw	0	0	0	2781	5310	-19540
Construction/maintenance, +5°C	150C1F1	0	0	0	9153	17737	-65416
Permanent loads yg= 0.9	150C1F2	0	0	0	9153	17722	-65418
Wind angle: 0°	150C1F3	0	0	0	9153	17703	-65420
	380C2F1	18307	35473	130833	18307	35473	-130833
	380C2F2	18307	35443	130836	18307	35443	-130836
	380C2F3	18307	35405	130840	18307	35405	-130840
	RTG	5555	10552	39010	5555	10552	-39010
NL3/1a	GW / opgw	0	0	0	2052	8836	-22926
Wind, 10°C	150C1F1	0	0	0	7628	27448	-74150
Permanent loads yg= 0.9	150C1F2	0	0	0	7647	26301	-71949
Wind angle: 45°	150C1F3	0	0	0	7672	24873	-69266
	380C2F1	15611	36325	116711	15256	54897	-148299
	380C2F2	15621	35779	116063	15294	52601	-143899
	380C2F3	15633	35106	115313	15344	49746	-138533
	RTG	4236	9590	31315	4153	13867	-38323
NL3/1b	GW / opgw	0	0	0	2132	5660	-18032
Wind, -20°C	150C1F1	0	0	0	7889	20000	-65945
Permanent loads yg= 0.9	150C1F2	0	0	0	7895	19750	-65649
Wind angle: 45°	150C1F3	0	0	0	7901	19440	-65307
	380C2F1	15849	35938	128324	15779	40001	-131890
	380C2F2	15851	35810	128273	15789	39499	-131299
	380C2F3	15852	35650	128217	15802	38880	-130615
	RTG	4287	9457	33917	4273	10392	-34654
NL3/3	GW / opgw	0	0	0	3918	14100	-36743
Wind, -5°C	150C1F1	0	0	0	9383	28425	-81780
Permanent loads yg= 0.9	150C1F2	0	0	0	9402	27535	-80247
Wind angle: 45°	150C1F3	0	0	0	9425	26435	-78414
	380C2F1	19066	42646	142958	18766	56850	-163559
	380C2F2	19073	42226	142583	18803	55070	-160494
	380C2F3	19081	41705	142153	18851	52870	-156828
	RTG	8055	16836	55784	7934	22809	-63968
NL3/4	GW / opgw	0	0	0	2769	6223	-20135
Construction/maintenance, +5°C	150C1F1	0	0	0	9124	20232	-66806
Permanent loads yg= 0.9	150C1F2	0	0	0	9128	20000	-66579
Wind angle: 45°	150C1F3	0	0	0	9133	19712	-66319
	380C2F1	18300	36644	130955	18248	40464	-133611
	380C2F2	18301	36520	130922	18256	40000	-133158
	380C2F3	18302	36366	130886	18265	39425	-132638
	RTG	5553	10824	39018	5544	11683	-39471
NL3/1a	GW / opgw	0	0	0	2036	10290	-25900
Wind, 10°C	150C1F1	0	0	0	7571	31361	-81845
Permanent loads yg= 0.9	150C1F2	0	0	0	7591	29877	-78898
Wind angle: 90°	150C1F3	0	0	0	7619	28019	-75256
	380C2F1	15142	62722	163689	15142	62722	-163689
	380C2F2	15182	59754	157796	15182	59754	-157796
	380C2F3	15238	56038	150511	15238	56038	-150511
	RTG	4124	15702	41894	4124	15702	-41894
NL3/1b	GW / opgw	0	0	0	2124	6003	-18559
Wind, -20°C	150C1F1	0	0	0	7870	20875	-67087
Permanent loads yg= 0.9	150C1F2	0	0	0	7877	20539	-66630
Wind angle: 90°	150C1F3	0	0	0	7887	20126	-66099
	380C2F1	15740	41750	134173	15740	41750	-134173
	380C2F2	15755	41078	133261	15755	41078	-133261
	380C2F3	15773	40252	132198	15773	40252	-132198
	RTG	4265	10791	35136	4265	10791	-35136
NL3/3	GW / opgw	0	0	0	3890	16165	-40570
Wind, -5°C	150C1F1	0	0	0	9322	31501	-87326
Permanent loads yg= 0.9	150C1F2	0	0	0	9344	30327	-85170
Wind angle: 90°	150C1F3	0	0	0	9374	28870	-82560
	380C2F1	18644	63002	174651	18644	63002	-174651
	380C2F2	18689	60654	170341	18689	60654	-170341
	380C2F3	18747	57740	165120	18747	57740	-165120
	RTG	7885	25369	68357	7885	25369	-68357

NL3/4	GW / opgw	0	0	0	2763	6523	-20498
Construction/maintenance, +5°C	150C1F1	0	0	0	9109	21038	-67689
Permanent loads yg= 0.9	150C1F2	0	0	0	9115	20729	-67334
Wind angle: 90°	150C1F3	0	0	0	9122	20348	-66924
	380C2F1	18218	42076	135378	18218	42076	-135378
	380C2F2	18230	41459	134669	18230	41459	-134669
	380C2F3	18244	40697	133848	18244	40697	-133848
	RTG	5538	12039	39789	5538	12039	-39789
NL3/1a	GW / opgw	0	0	0	2112	5258	-16276
Wind, 10°C	150C1F1	0	0	0	7805	18162	-58355
Permanent loads yg= 0.9	150C1F2	0	0	0	7811	17890	-58031
Wind angle: -45°	150C1F3	0	0	0	7817	17553	-57657
	380C2F1	15256	54897	148299	15611	36325	-116711
	380C2F2	15294	52601	143899	15621	35779	-116063
	380C2F3	15344	49746	138533	15633	35106	-115313
	RTG	4153	13867	38323	4236	9590	-31315
NL3/1b	GW / opgw	0	0	0	2147	4876	-17168
Wind, -20°C	150C1F1	0	0	0	7925	17969	-64162
Permanent loads yg= 0.9	150C1F2	0	0	0	7925	17905	-64137
Wind angle: -45°	150C1F3	0	0	0	7926	17825	-64109
	380C2F1	15779	40001	131890	15849	35938	-128324
	380C2F2	15789	39499	131299	15851	35810	-128273
	380C2F3	15802	38880	130615	15852	35650	-128217
	RTG	4273	10392	34654	4287	9457	-33917
NL3/3	GW / opgw	0	0	0	4015	9085	-28615
Wind, -5°C	150C1F1	0	0	0	9533	21323	-71479
Permanent loads yg= 0.9	150C1F2	0	0	0	9537	21113	-71291
Wind angle: -45°	150C1F3	0	0	0	9541	20853	-71076
	380C2F1	18766	56850	163559	19066	42646	-142958
	380C2F2	18803	55070	160494	19073	42226	-142583
	380C2F3	18851	52870	156828	19081	41705	-142153
	RTG	7934	22809	63968	8055	16836	-55784
NL3/4	GW / opgw	0	0	0	2779	5521	-19573
Construction/maintenance, +5°C	150C1F1	0	0	0	9150	18322	-65478
Permanent loads yg= 0.9	150C1F2	0	0	0	9151	18260	-65461
Wind angle: -45°	150C1F3	0	0	0	9151	18183	-65443
	380C2F1	18248	40464	133611	18300	36644	-130955
	380C2F2	18256	40000	133158	18301	36520	-130922
	380C2F3	18265	39425	132638	18302	36366	-130886
	RTG	5544	11683	39471	5553	10824	-39018

ZWW4HK450+5

Loadcases for tower strength (Special limit state)

		Ahead			Back		
Loadcase according to 50341-3-15	Att. Point	Vertical [N]	Transversal [N]	Longitudinal [N]	Vertical [N]	Transversal [N]	Longitudinal [N]
NL3/1a	GW / opgw	2829	5483	19564	2829	5483	-19564
Wind, 10°C	150C1F1	10423	19924	71832	10423	19924	-71832
Permanent loads yg= 1.2	150C1F2	10423	19873	71825	10423	19873	-71825
Wind angle: 0°	150C1F3	10423	19807	71818	10423	19807	-71818
	380C2F1	0	0	0	20845	39849	-143664
	380C2F2	0	0	0	20846	39745	-143649
	380C2F3	0	0	0	20847	39615	-143635
	RTG	0	0	0	5652	10784	-39049
NL3/1b	GW / opgw	2853	5873	21643	2853	5873	-21643
Wind, -20°C	150C1F1	10519	21782	80513	10519	21782	-80513
Permanent loads yg= 1.2	150C1F2	10519	21767	80515	10519	21767	-80515
Wind angle: 0°	150C1F3	10519	21748	80517	10519	21748	-80517
	380C2F1	0	0	0	21037	43563	-161026
	380C2F2	0	0	0	21037	43533	-161029
	380C2F3	0	0	0	21037	43496	-161034
	RTG	0	0	0	5695	11607	-42948
NL3/3	GW / opgw	4732	8773	31324	4732	8773	-31324
Wind, -5°C	150C1F1	12135	23533	85656	12135	23533	-85656
Permanent loads yg= 1.2	150C1F2	12135	23490	85654	12135	23490	-85654
Wind angle: 0°	150C1F3	12136	23435	85653	12136	23435	-85653
	380C2F1	0	0	0	24270	47066	-171312
	380C2F2	0	0	0	24271	46980	-171308
	380C2F3	0	0	0	24271	46871	-171307
	RTG	0	0	0	9465	17256	-62512
NL3/4	GW / opgw	3480	6410	23646	3480	6410	-23646
Construction/maintenance, +5°C	150C1F1	11730	21809	80617	11730	21809	-80617
Permanent loads yg= 1.2	150C1F2	11730	21795	80619	11730	21795	-80619
Wind angle: 0°	150C1F3	11730	21776	80622	11730	21776	-80622
	380C2F1	0	0	0	23460	43619	-161233
	380C2F2	0	0	0	23460	43589	-161238
	380C2F3	0	0	0	23460	43552	-161244
	RTG	0	0	0	6951	12753	-47225
NL3/1a	GW / opgw	2817	6317	20228	2757	9522	-25485
Wind, 10°C	150C1F1	10395	22125	73141	10232	30371	-85052
Permanent loads yg= 1.2	150C1F2	10399	21880	72921	10252	29342	-83294
Wind angle: 45°	150C1F3	10404	21576	72669	10277	28068	-81186
	380C2F1	0	0	0	20463	60742	-170104
	380C2F2	0	0	0	20503	58683	-166588
	380C2F3	0	0	0	20554	56136	-162373
	RTG	0	0	0	5567	15600	-44790
NL3/1b	GW / opgw	2851	6084	21678	2840	6791	-22252
Wind, -20°C	150C1F1	10515	22360	80550	10489	24218	-81685
Permanent loads yg= 1.2	150C1F2	10516	22300	80537	10493	23994	-81488
Wind angle: 45°	150C1F3	10516	22223	80524	10498	23716	-81263
	380C2F1	0	0	0	20979	48436	-163369
	380C2F2	0	0	0	20987	47988	-162976
	380C2F3	0	0	0	20996	47432	-162525
	RTG	0	0	0	5683	12741	-43421
NL3/3	GW / opgw	4714	10037	32168	4620	14747	-39156
Wind, -5°C	150C1F1	12117	25316	86379	11987	31733	-94119
Permanent loads yg= 1.2	150C1F2	12119	25121	86249	12005	30931	-92918
Wind angle: 45°	150C1F3	12123	24879	86102	12026	29943	-91501
	380C2F1	0	0	0	23974	63465	-188237
	380C2F2	0	0	0	24009	61863	-185836
	380C2F3	0	0	0	24053	59886	-183002
	RTG	0	0	0	9338	24412	-69949
NL3/4	GW / opgw	3479	6615	23658	3470	7274	-24054
Construction/maintenance, +5°C	150C1F1	11727	22380	80623	11707	24170	-81500
Permanent loads yg= 1.2	150C1F2	11728	22321	80615	11710	23956	-81343
Wind angle: 45°	150C1F3	11728	22246	80607	11714	23691	-81165
	380C2F1	0	0	0	23414	48340	-162999
	380C2F2	0	0	0	23421	47913	-162685
	380C2F3	0	0	0	23428	47381	-162329
	RTG	0	0	0	6943	13839	-47514
NL3/1a	GW / opgw	2737	10870	28061	2737	10870	-28061
Wind, 10°C	150C1F1	10167	33918	91382	10167	33918	-91382
Permanent loads yg= 1.2	150C1F2	10191	32566	88927	10191	32566	-88927
Wind angle: 90°	150C1F3	10222	30885	85945	10222	30885	-85945
	380C2F1	0	0	0	20335	67836	-182764
	380C2F2	0	0	0	20382	65131	-177855
	380C2F3	0	0	0	20443	61769	-171890
	RTG	0	0	0	5536	17249	-47663

NL3/1b	GW / opgw	2834	7092	22624	2834	7092	-22624
Wind, -20°C	150C1F1	10474	24994	82458	10474	24994	-82458
Permanent loads yg= 1.2	150C1F2	10480	24697	82146	10480	24697	-82146
Wind angle: 90°	150C1F3	10487	24330	81788	10487	24330	-81788
	380C2F1	0	0	0	20948	49989	-164916
	380C2F2	0	0	0	20960	49395	-164293
	380C2F3	0	0	0	20974	48660	-163576
	RTG	0	0	0	5677	13098	-43746
NL3/3	GW / opgw	4589	16717	42628	4589	16717	-42628
Wind, -5°C	150C1F1	11927	34514	98564	11927	34514	-98564
Permanent loads yg= 1.2	150C1F2	11950	33449	96818	11950	33449	-96818
Wind angle: 90°	150C1F3	11978	32133	94734	11978	32133	-94734
	380C2F1	0	0	0	23855	69027	-197127
	380C2F2	0	0	0	23900	66899	-193637
	380C2F3	0	0	0	23957	64267	-189469
	RTG	0	0	0	9290	26816	-73757
NL3/4	GW / opgw	3466	7548	24324	3466	7548	-24324
Construction/maintenance, +5°C	150C1F1	11695	24906	82122	11695	24906	-82122
Permanent loads yg= 1.2	150C1F2	11700	24625	81870	11700	24625	-81870
Wind angle: 90°	150C1F3	11706	24276	81582	11706	24276	-81582
	380C2F1	0	0	0	23391	49812	-164244
	380C2F2	0	0	0	23400	49250	-163740
	380C2F3	0	0	0	23411	48553	-163164
	RTG	0	0	0	6938	14170	-47741
NL3/1a	GW / opgw	2757	9522	25485	2817	6317	-20228
Wind, 10°C	150C1F1	10232	30371	85052	10395	22125	-73141
Permanent loads yg= 1.2	150C1F2	10252	29342	83294	10399	21880	-72921
Wind angle: -45°	150C1F3	10277	28068	81186	10404	21576	-72669
	380C2F1	0	0	0	20791	44249	-146283
	380C2F2	0	0	0	20799	43760	-145843
	380C2F3	0	0	0	20808	43152	-145339
	RTG	0	0	0	5640	11806	-39586
NL3/1b	GW / opgw	2840	6791	22252	2851	6084	-21678
Wind, -20°C	150C1F1	10489	24218	81685	10515	22360	-80550
Permanent loads yg= 1.2	150C1F2	10493	23994	81488	10516	22300	-80537
Wind angle: -45°	150C1F3	10498	23716	81263	10516	22223	-80524
	380C2F1	0	0	0	21031	44721	-161101
	380C2F2	0	0	0	21032	44599	-161074
	380C2F3	0	0	0	21033	44447	-161047
	RTG	0	0	0	5693	11879	-42957
NL3/3	GW / opgw	4620	14747	39156	4714	10037	-32168
Wind, -5°C	150C1F1	11987	31733	94119	12117	25316	-86379
Permanent loads yg= 1.2	150C1F2	12005	30931	92918	12119	25121	-86249
Wind angle: -45°	150C1F3	12026	29943	91501	12123	24879	-86102
	380C2F1	0	0	0	24233	50632	-172757
	380C2F2	0	0	0	24239	50243	-172498
	380C2F3	0	0	0	24245	49759	-172205
	RTG	0	0	0	9449	18814	-63165
NL3/4	GW / opgw	3470	7274	24054	3479	6615	-23658
Construction/maintenance, +5°C	150C1F1	11707	24170	81500	11727	22380	-80623
Permanent loads yg= 1.2	150C1F2	11710	23956	81343	11728	22321	-80615
Wind angle: -45°	150C1F3	11714	23691	81165	11728	22246	-80607
	380C2F1	0	0	0	23455	44761	-161246
	380C2F2	0	0	0	23456	44642	-161230
	380C2F3	0	0	0	23457	44492	-161213
	RTG	0	0	0	6950	13020	-47215
NL3/1a	GW / opgw	2128	4338	15293	2128	4338	-15293
Wind, 10°C	150C1F1	7841	15770	56329	7841	15770	-56329
Permanent loads yg= 0.9	150C1F2	7842	15716	56313	7842	15716	-56313
Wind angle: 0°	150C1F3	7842	15648	56296	7842	15648	-56296
	380C2F1	0	0	0	15683	31540	-112657
	380C2F2	0	0	0	15684	31432	-112626
	380C2F3	0	0	0	15685	31296	-112592
	RTG	0	0	0	4251	8487	-30473
NL3/1b	GW / opgw	2149	4655	17097	2149	4655	-17097
Wind, -20°C	150C1F1	7929	17369	64044	7929	17369	-64044
Permanent loads yg= 0.9	150C1F2	7929	17354	64045	7929	17354	-64045
Wind angle: 0°	150C1F3	7929	17335	64047	7929	17335	-64047
	380C2F1	0	0	0	15858	34737	-128089
	380C2F2	0	0	0	15858	34707	-128091
	380C2F3	0	0	0	15858	34669	-128094
	RTG	0	0	0	4289	9176	-33875

NL3/3	GW / opgw	4036	7757	27533	4036	7757	-27533
Wind, -5°C	150C1F1	9557	19436	70364	9557	19436	-70364
Permanent loads yg= 0.9	150C1F2	9557	19391	70358	9557	19391	-70358
Wind angle: 0°	150C1F3	9558	19335	70352	9558	19335	-70352
	380C2F1	0	0	0	19114	38871	-140728
	380C2F2	0	0	0	19115	38782	-140716
	380C2F3	0	0	0	19115	38670	-140704
	RTG	0	0	0	8075	15219	-54909
NL3/4	GW / opgw	2781	5310	19540	2781	5310	-19540
Construction/maintenance, +5°C	150C1F1	9153	17737	65416	9153	17737	-65416
Permanent loads yg= 0.9	150C1F2	9153	17722	65418	9153	17722	-65418
Wind angle: 0°	150C1F3	9153	17703	65420	9153	17703	-65420
	380C2F1	0	0	0	18307	35473	-130833
	380C2F2	0	0	0	18307	35443	-130836
	380C2F3	0	0	0	18307	35405	-130840
	RTG	0	0	0	5555	10552	-39010
NL3/1a	GW / opgw	2112	5258	16276	2052	8836	-22926
Wind, 10°C	150C1F1	7805	18162	58355	7628	27448	-74150
Permanent loads yg= 0.9	150C1F2	7811	17890	58031	7647	26301	-71949
Wind angle: 45°	150C1F3	7817	17553	57657	7672	24873	-69266
	380C2F1	0	0	0	15256	54897	-148299
	380C2F2	0	0	0	15294	52601	-143899
	380C2F3	0	0	0	15344	49746	-138533
	RTG	0	0	0	4153	13867	-38323
NL3/1b	GW / opgw	2147	4876	17168	2132	5660	-18032
Wind, -20°C	150C1F1	7925	17969	64162	7889	20000	-65945
Permanent loads yg= 0.9	150C1F2	7925	17905	64137	7895	19750	-65649
Wind angle: 45°	150C1F3	7926	17825	64109	7901	19440	-65307
	380C2F1	0	0	0	15779	40001	-131890
	380C2F2	0	0	0	15789	39499	-131299
	380C2F3	0	0	0	15802	38880	-130615
	RTG	0	0	0	4273	10392	-34654
NL3/3	GW / opgw	4015	9085	28615	3918	14100	-36743
Wind, -5°C	150C1F1	9533	21323	71479	9383	28425	-81780
Permanent loads yg= 0.9	150C1F2	9537	21113	71291	9402	27535	-80247
Wind angle: 45°	150C1F3	9541	20853	71076	9425	26435	-78414
	380C2F1	0	0	0	18766	56850	-163559
	380C2F2	0	0	0	18803	55070	-160494
	380C2F3	0	0	0	18851	52870	-156828
	RTG	0	0	0	7934	22809	-63968
NL3/4	GW / opgw	2779	5521	19573	2769	6223	-20135
Construction/maintenance, +5°C	150C1F1	9150	18322	65478	9124	20232	-66806
Permanent loads yg= 0.9	150C1F2	9151	18260	65461	9128	20000	-66579
Wind angle: 45°	150C1F3	9151	18183	65443	9133	19712	-66319
	380C2F1	0	0	0	18248	40464	-133611
	380C2F2	0	0	0	18256	40000	-133158
	380C2F3	0	0	0	18265	39425	-132638
	RTG	0	0	0	5544	11683	-39471
NL3/1a	GW / opgw	2036	10290	25900	2036	10290	-25900
Wind, 10°C	150C1F1	7571	31361	81845	7571	31361	-81845
Permanent loads yg= 0.9	150C1F2	7591	29877	78898	7591	29877	-78898
Wind angle: 90°	150C1F3	7619	28019	75256	7619	28019	-75256
	380C2F1	0	0	0	15142	62722	-163689
	380C2F2	0	0	0	15182	59754	-157796
	380C2F3	0	0	0	15238	56038	-150511
	RTG	0	0	0	4124	15702	-41894
NL3/1b	GW / opgw	2124	6003	18559	2124	6003	-18559
Wind, -20°C	150C1F1	7870	20875	67087	7870	20875	-67087
Permanent loads yg= 0.9	150C1F2	7877	20539	66630	7877	20539	-66630
Wind angle: 90°	150C1F3	7887	20126	66099	7887	20126	-66099
	380C2F1	0	0	0	15740	41750	-134173
	380C2F2	0	0	0	15755	41078	-133261
	380C2F3	0	0	0	15773	40252	-132198
	RTG	0	0	0	4265	10791	-35136
NL3/3	GW / opgw	3890	16165	40570	3890	16165	-40570
Wind, -5°C	150C1F1	9322	31501	87326	9322	31501	-87326
Permanent loads yg= 0.9	150C1F2	9344	30327	85170	9344	30327	-85170
Wind angle: 90°	150C1F3	9374	28870	82560	9374	28870	-82560
	380C2F1	0	0	0	18644	63002	-174651
	380C2F2	0	0	0	18689	60654	-170341
	380C2F3	0	0	0	18747	57740	-165120
	RTG	0	0	0	7885	25369	-68357

NL3/4	GW / opgw	2763	6523	20498	2763	6523	-20498
Construction/maintenance, +5°C	150C1F1	9109	21038	67689	9109	21038	-67689
Permanent loads yg= 0.9	150C1F2	9115	20729	67334	9115	20729	-67334
Wind angle: 90°	150C1F3	9122	20348	66924	9122	20348	-66924
	380C2F1	0	0	0	18218	42076	-135378
	380C2F2	0	0	0	18230	41459	-134669
	380C2F3	0	0	0	18244	40697	-133848
	RTG	0	0	0	5538	12039	-39789
NL3/1a	GW / opgw	2052	8836	22926	2112	5258	-16276
Wind, 10°C	150C1F1	7628	27448	74150	7805	18162	-58355
Permanent loads yg= 0.9	150C1F2	7647	26301	71949	7811	17890	-58031
Wind angle: -45°	150C1F3	7672	24873	69266	7817	17553	-57657
	380C2F1	0	0	0	15611	36325	-116711
	380C2F2	0	0	0	15621	35779	-116063
	380C2F3	0	0	0	15633	35106	-115313
	RTG	0	0	0	4236	9590	-31315
NL3/1b	GW / opgw	2132	5660	18032	2147	4876	-17168
Wind, -20°C	150C1F1	7889	20000	65945	7925	17969	-64162
Permanent loads yg= 0.9	150C1F2	7895	19750	65649	7925	17905	-64137
Wind angle: -45°	150C1F3	7901	19440	65307	7926	17825	-64109
	380C2F1	0	0	0	15849	35938	-128324
	380C2F2	0	0	0	15851	35810	-128273
	380C2F3	0	0	0	15852	35650	-128217
	RTG	0	0	0	4287	9457	-33917
NL3/3	GW / opgw	3918	14100	36743	4015	9085	-28615
Wind, -5°C	150C1F1	9383	28425	81780	9533	21323	-71479
Permanent loads yg= 0.9	150C1F2	9402	27535	80247	9537	21113	-71291
Wind angle: -45°	150C1F3	9425	26435	78414	9541	20853	-71076
	380C2F1	0	0	0	19066	42646	-142958
	380C2F2	0	0	0	19073	42226	-142583
	380C2F3	0	0	0	19081	41705	-142153
	RTG	0	0	0	8055	16836	-55784
NL3/4	GW / opgw	2769	6223	20135	2779	5521	-19573
Construction/maintenance, +5°C	150C1F1	9124	20232	66806	9150	18322	-65478
Permanent loads yg= 0.9	150C1F2	9128	20000	66579	9151	18260	-65461
Wind angle: -45°	150C1F3	9133	19712	66319	9151	18183	-65443
	380C2F1	0	0	0	18300	36644	-130955
	380C2F2	0	0	0	18301	36520	-130922
	380C2F3	0	0	0	18302	36366	-130886
	RTG	0	0	0	5553	10824	-39018

ZWW4HK450+5

Loadcases for tower strength (Special limit state)

		Ahead			Back		
Loadcase according to 50341-3-15	Att. Point	Vertical [N]	Transversal [N]	Longitudinal [N]	Vertical [N]	Transversal [N]	Longitudinal [N]
NL3/1a	GW / opgw	2829	5483	19564	0	0	0
Wind, 10°C	150C1F1	10423	19924	71832	0	0	0
Permanent loads yg= 1.2	150C1F2	10423	19873	71825	0	0	0
Wind angle: 0°	150C1F3	10423	19807	71818	0	0	0
	380C2F1	20845	39849	143664	20845	39849	-143664
	380C2F2	20846	39745	143649	20846	39745	-143649
	380C2F3	20847	39615	143635	20847	39615	-143635
	RTG	0	0	0	5652	10784	-39049
NL3/1b	GW / opgw	2853	5873	21643	0	0	0
Wind, -20°C	150C1F1	10519	21782	80513	0	0	0
Permanent loads yg= 1.2	150C1F2	10519	21767	80515	0	0	0
Wind angle: 0°	150C1F3	10519	21748	80517	0	0	0
	380C2F1	21037	43563	161026	21037	43563	-161026
	380C2F2	21037	43533	161029	21037	43533	-161029
	380C2F3	21037	43496	161034	21037	43496	-161034
	RTG	0	0	0	5695	11607	-42948
NL3/3	GW / opgw	4732	8773	31324	0	0	0
Wind, -5°C	150C1F1	12135	23533	85656	0	0	0
Permanent loads yg= 1.2	150C1F2	12135	23490	85654	0	0	0
Wind angle: 0°	150C1F3	12136	23435	85653	0	0	0
	380C2F1	24270	47066	171312	24270	47066	-171312
	380C2F2	24271	46980	171308	24271	46980	-171308
	380C2F3	24271	46871	171307	24271	46871	-171307
	RTG	0	0	0	9465	17256	-62512
NL3/4	GW / opgw	3480	6410	23646	0	0	0
Construction/maintenance, +5°C	150C1F1	11730	21809	80617	0	0	0
Permanent loads yg= 1.2	150C1F2	11730	21795	80619	0	0	0
Wind angle: 0°	150C1F3	11730	21776	80622	0	0	0
	380C2F1	23460	43619	161233	23460	43619	-161233
	380C2F2	23460	43589	161238	23460	43589	-161238
	380C2F3	23460	43552	161244	23460	43552	-161244
	RTG	0	0	0	6951	12753	-47225
NL3/1a	GW / opgw	2817	6317	20228	0	0	0
Wind, 10°C	150C1F1	10395	22125	73141	0	0	0
Permanent loads yg= 1.2	150C1F2	10399	21880	72921	0	0	0
Wind angle: 45°	150C1F3	10404	21576	72669	0	0	0
	380C2F1	20791	44249	146283	20463	60742	-170104
	380C2F2	20799	43760	145843	20503	58683	-166588
	380C2F3	20808	43152	145339	20554	56136	-162373
	RTG	0	0	0	5567	15600	-44790
NL3/1b	GW / opgw	2851	6084	21678	0	0	0
Wind, -20°C	150C1F1	10515	22360	80550	0	0	0
Permanent loads yg= 1.2	150C1F2	10516	22300	80537	0	0	0
Wind angle: 45°	150C1F3	10516	22223	80524	0	0	0
	380C2F1	21031	44721	161101	20979	48436	-163369
	380C2F2	21032	44599	161074	20987	47988	-162976
	380C2F3	21033	44447	161047	20996	47432	-162525
	RTG	0	0	0	5683	12741	-43421
NL3/3	GW / opgw	4714	10037	32168	0	0	0
Wind, -5°C	150C1F1	12117	25316	86379	0	0	0
Permanent loads yg= 1.2	150C1F2	12119	25121	86249	0	0	0
Wind angle: 45°	150C1F3	12123	24879	86102	0	0	0
	380C2F1	24233	50632	172757	23974	63465	-188237
	380C2F2	24239	50243	172498	24009	61863	-185836
	380C2F3	24245	49759	172205	24053	59886	-183002
	RTG	0	0	0	9338	24412	-69949
NL3/4	GW / opgw	3479	6615	23658	0	0	0
Construction/maintenance, +5°C	150C1F1	11727	22380	80623	0	0	0
Permanent loads yg= 1.2	150C1F2	11728	22321	80615	0	0	0
Wind angle: 45°	150C1F3	11728	22246	80607	0	0	0
	380C2F1	23455	44761	161246	23414	48340	-162999
	380C2F2	23456	44642	161230	23421	47913	-162685
	380C2F3	23457	44492	161213	23428	47381	-162329
	RTG	0	0	0	6943	13839	-47514
NL3/1a	GW / opgw	2737	10870	28061	0	0	0
Wind, 10°C	150C1F1	10167	33918	91382	0	0	0
Permanent loads yg= 1.2	150C1F2	10191	32566	88927	0	0	0
Wind angle: 90°	150C1F3	10222	30885	85945	0	0	0
	380C2F1	20335	67836	182764	20335	67836	-182764
	380C2F2	20382	65131	177855	20382	65131	-177855
	380C2F3	20443	61769	171890	20443	61769	-171890
	RTG	0	0	0	5536	17249	-47663

NL3/1b	GW / opgw	2834	7092	22624	0	0	0
Wind, -20°C	150C1F1	10474	24994	82458	0	0	0
Permanent loads yg= 1.2	150C1F2	10480	24697	82146	0	0	0
Wind angle: 90°	150C1F3	10487	24330	81788	0	0	0
	380C2F1	20948	49989	164916	20948	49989	-164916
	380C2F2	20960	49395	164293	20960	49395	-164293
	380C2F3	20974	48660	163576	20974	48660	-163576
	RTG	0	0	0	5677	13098	-43746
NL3/3	GW / opgw	4589	16717	42628	0	0	0
Wind, -5°C	150C1F1	11927	34514	98564	0	0	0
Permanent loads yg= 1.2	150C1F2	11950	33449	96818	0	0	0
Wind angle: 90°	150C1F3	11978	32133	94734	0	0	0
	380C2F1	23855	69027	197127	23855	69027	-197127
	380C2F2	23900	66899	193637	23900	66899	-193637
	380C2F3	23957	64267	189469	23957	64267	-189469
	RTG	0	0	0	9290	26816	-73757
NL3/4	GW / opgw	3466	7548	24324	0	0	0
Construction/maintenance, +5°C	150C1F1	11695	24906	82122	0	0	0
Permanent loads yg= 1.2	150C1F2	11700	24625	81870	0	0	0
Wind angle: 90°	150C1F3	11706	24276	81582	0	0	0
	380C2F1	23391	49812	164244	23391	49812	-164244
	380C2F2	23400	49250	163740	23400	49250	-163740
	380C2F3	23411	48553	163164	23411	48553	-163164
	RTG	0	0	0	6938	14170	-47741
NL3/1a	GW / opgw	2757	9522	25485	0	0	0
Wind, 10°C	150C1F1	10232	30371	85052	0	0	0
Permanent loads yg= 1.2	150C1F2	10252	29342	83294	0	0	0
Wind angle: -45°	150C1F3	10277	28068	81186	0	0	0
	380C2F1	20463	60742	170104	20791	44249	-146283
	380C2F2	20503	58683	166588	20799	43760	-145843
	380C2F3	20554	56136	162373	20808	43152	-145339
	RTG	0	0	0	5640	11806	-39586
NL3/1b	GW / opgw	2840	6791	22252	0	0	0
Wind, -20°C	150C1F1	10489	24218	81685	0	0	0
Permanent loads yg= 1.2	150C1F2	10493	23994	81488	0	0	0
Wind angle: -45°	150C1F3	10498	23716	81263	0	0	0
	380C2F1	20979	48436	163369	21031	44721	-161101
	380C2F2	20987	47988	162976	21032	44599	-161074
	380C2F3	20996	47432	162525	21033	44447	-161047
	RTG	0	0	0	5693	11879	-42957
NL3/3	GW / opgw	4620	14747	39156	0	0	0
Wind, -5°C	150C1F1	11987	31733	94119	0	0	0
Permanent loads yg= 1.2	150C1F2	12005	30931	92918	0	0	0
Wind angle: -45°	150C1F3	12026	29943	91501	0	0	0
	380C2F1	23974	63465	188237	24233	50632	-172757
	380C2F2	24009	61863	185836	24239	50243	-172498
	380C2F3	24053	59886	183002	24245	49759	-172205
	RTG	0	0	0	9449	18814	-63165
NL3/4	GW / opgw	3470	7274	24054	0	0	0
Construction/maintenance, +5°C	150C1F1	11707	24170	81500	0	0	0
Permanent loads yg= 1.2	150C1F2	11710	23956	81343	0	0	0
Wind angle: -45°	150C1F3	11714	23691	81165	0	0	0
	380C2F1	23414	48340	162999	23455	44761	-161246
	380C2F2	23421	47913	162685	23456	44642	-161230
	380C2F3	23428	47381	162329	23457	44492	-161213
	RTG	0	0	0	6950	13020	-47215
NL3/1a	GW / opgw	2128	4338	15293	0	0	0
Wind, 10°C	150C1F1	7841	15770	56329	0	0	0
Permanent loads yg= 0.9	150C1F2	7842	15716	56313	0	0	0
Wind angle: 0°	150C1F3	7842	15648	56296	0	0	0
	380C2F1	15683	31540	112657	15683	31540	-112657
	380C2F2	15684	31432	112626	15684	31432	-112626
	380C2F3	15685	31296	112592	15685	31296	-112592
	RTG	0	0	0	4251	8487	-30473
NL3/1b	GW / opgw	2149	4655	17097	0	0	0
Wind, -20°C	150C1F1	7929	17369	64044	0	0	0
Permanent loads yg= 0.9	150C1F2	7929	17354	64045	0	0	0
Wind angle: 0°	150C1F3	7929	17335	64047	0	0	0
	380C2F1	15858	34737	128089	15858	34737	-128089
	380C2F2	15858	34707	128091	15858	34707	-128091
	380C2F3	15858	34669	128094	15858	34669	-128094
	RTG	0	0	0	4289	9176	-33875

NL3/3	GW / opgw	4036	7757	27533	0	0	0
Wind, -5°C	150C1F1	9557	19436	70364	0	0	0
Permanent loads yg= 0.9	150C1F2	9557	19391	70358	0	0	0
Wind angle: 0°	150C1F3	9558	19335	70352	0	0	0
	380C2F1	19114	38871	140728	19114	38871	-140728
	380C2F2	19115	38782	140716	19115	38782	-140716
	380C2F3	19115	38670	140704	19115	38670	-140704
	RTG	0	0	0	8075	15219	-54909
NL3/4	GW / opgw	2781	5310	19540	0	0	0
Construction/maintenance, +5°C	150C1F1	9153	17737	65416	0	0	0
Permanent loads yg= 0.9	150C1F2	9153	17722	65418	0	0	0
Wind angle: 0°	150C1F3	9153	17703	65420	0	0	0
	380C2F1	18307	35473	130833	18307	35473	-130833
	380C2F2	18307	35443	130836	18307	35443	-130836
	380C2F3	18307	35405	130840	18307	35405	-130840
	RTG	0	0	0	5555	10552	-39010
NL3/1a	GW / opgw	2112	5258	16276	0	0	0
Wind, 10°C	150C1F1	7805	18162	58355	0	0	0
Permanent loads yg= 0.9	150C1F2	7811	17890	58031	0	0	0
Wind angle: 45°	150C1F3	7817	17553	57657	0	0	0
	380C2F1	15611	36325	116711	15256	54897	-148299
	380C2F2	15621	35779	116063	15294	52601	-143899
	380C2F3	15633	35106	115313	15344	49746	-138533
	RTG	0	0	0	4153	13867	-38323
NL3/1b	GW / opgw	2147	4876	17168	0	0	0
Wind, -20°C	150C1F1	7925	17969	64162	0	0	0
Permanent loads yg= 0.9	150C1F2	7925	17905	64137	0	0	0
Wind angle: 45°	150C1F3	7926	17825	64109	0	0	0
	380C2F1	15849	35938	128324	15779	40001	-131890
	380C2F2	15851	35810	128273	15789	39499	-131299
	380C2F3	15852	35650	128217	15802	38880	-130615
	RTG	0	0	0	4273	10392	-34654
NL3/3	GW / opgw	4015	9085	28615	0	0	0
Wind, -5°C	150C1F1	9533	21323	71479	0	0	0
Permanent loads yg= 0.9	150C1F2	9537	21113	71291	0	0	0
Wind angle: 45°	150C1F3	9541	20853	71076	0	0	0
	380C2F1	19066	42646	142958	18766	56850	-163559
	380C2F2	19073	42226	142583	18803	55070	-160494
	380C2F3	19081	41705	142153	18851	52870	-156828
	RTG	0	0	0	7934	22809	-63968
NL3/4	GW / opgw	2779	5521	19573	0	0	0
Construction/maintenance, +5°C	150C1F1	9150	18322	65478	0	0	0
Permanent loads yg= 0.9	150C1F2	9151	18260	65461	0	0	0
Wind angle: 45°	150C1F3	9151	18183	65443	0	0	0
	380C2F1	18300	36644	130955	18248	40464	-133611
	380C2F2	18301	36520	130922	18256	40000	-133158
	380C2F3	18302	36366	130886	18265	39425	-132638
	RTG	0	0	0	5544	11683	-39471
NL3/1a	GW / opgw	2036	10290	25900	0	0	0
Wind, 10°C	150C1F1	7571	31361	81845	0	0	0
Permanent loads yg= 0.9	150C1F2	7591	29877	78898	0	0	0
Wind angle: 90°	150C1F3	7619	28019	75256	0	0	0
	380C2F1	15142	62722	163689	15142	62722	-163689
	380C2F2	15182	59754	157796	15182	59754	-157796
	380C2F3	15238	56038	150511	15238	56038	-150511
	RTG	0	0	0	4124	15702	-41894
NL3/1b	GW / opgw	2124	6003	18559	0	0	0
Wind, -20°C	150C1F1	7870	20875	67087	0	0	0
Permanent loads yg= 0.9	150C1F2	7877	20539	66630	0	0	0
Wind angle: 90°	150C1F3	7887	20126	66099	0	0	0
	380C2F1	15740	41750	134173	15740	41750	-134173
	380C2F2	15755	41078	133261	15755	41078	-133261
	380C2F3	15773	40252	132198	15773	40252	-132198
	RTG	0	0	0	4265	10791	-35136
NL3/3	GW / opgw	3890	16165	40570	0	0	0
Wind, -5°C	150C1F1	9322	31501	87326	0	0	0
Permanent loads yg= 0.9	150C1F2	9344	30327	85170	0	0	0
Wind angle: 90°	150C1F3	9374	28870	82560	0	0	0
	380C2F1	18644	63002	174651	18644	63002	-174651
	380C2F2	18689	60654	170341	18689	60654	-170341
	380C2F3	18747	57740	165120	18747	57740	-165120
	RTG	0	0	0	7885	25369	-68357

NL3/4	GW / opgw	2763	6523	20498	0	0	0
Construction/maintenance, +5°C	150C1F1	9109	21038	67689	0	0	0
Permanent loads yg= 0.9	150C1F2	9115	20729	67334	0	0	0
Wind angle: 90°	150C1F3	9122	20348	66924	0	0	0
	380C2F1	18218	42076	135378	18218	42076	-135378
	380C2F2	18230	41459	134669	18230	41459	-134669
	380C2F3	18244	40697	133848	18244	40697	-133848
	RTG	0	0	0	5538	12039	-39789
NL3/1a	GW / opgw	2052	8836	22926	0	0	0
Wind, 10°C	150C1F1	7628	27448	74150	0	0	0
Permanent loads yg= 0.9	150C1F2	7647	26301	71949	0	0	0
Wind angle: -45°	150C1F3	7672	24873	69266	0	0	0
	380C2F1	15256	54897	148299	15611	36325	-116711
	380C2F2	15294	52601	143899	15621	35779	-116063
	380C2F3	15344	49746	138533	15633	35106	-115313
	RTG	0	0	0	4236	9590	-31315
NL3/1b	GW / opgw	2132	5660	18032	0	0	0
Wind, -20°C	150C1F1	7889	20000	65945	0	0	0
Permanent loads yg= 0.9	150C1F2	7895	19750	65649	0	0	0
Wind angle: -45°	150C1F3	7901	19440	65307	0	0	0
	380C2F1	15779	40001	131890	15849	35938	-128324
	380C2F2	15789	39499	131299	15851	35810	-128273
	380C2F3	15802	38880	130615	15852	35650	-128217
	RTG	0	0	0	4287	9457	-33917
NL3/3	GW / opgw	3918	14100	36743	0	0	0
Wind, -5°C	150C1F1	9383	28425	81780	0	0	0
Permanent loads yg= 0.9	150C1F2	9402	27535	80247	0	0	0
Wind angle: -45°	150C1F3	9425	26435	78414	0	0	0
	380C2F1	18766	56850	163559	19066	42646	-142958
	380C2F2	18803	55070	160494	19073	42226	-142583
	380C2F3	18851	52870	156828	19081	41705	-142153
	RTG	0	0	0	8055	16836	-55784
NL3/4	GW / opgw	2769	6223	20135	0	0	0
Construction/maintenance, +5°C	150C1F1	9124	20232	66806	0	0	0
Permanent loads yg= 0.9	150C1F2	9128	20000	66579	0	0	0
Wind angle: -45°	150C1F3	9133	19712	66319	0	0	0
	380C2F1	18248	40464	133611	18300	36644	-130955
	380C2F2	18256	40000	133158	18301	36520	-130922
	380C2F3	18265	39425	132638	18302	36366	-130886
	RTG	0	0	0	5553	10824	-39018

ZWW4HK450+5

Loadcases for tower strength (Special limit state)

		Ahead			Back		
Loadcase according to 50341-3-15	Att. Point	Vertical [N]	Transversal [N]	Longitudinal [N]	Vertical [N]	Transversal [N]	Longitudinal [N]
NL3/1a	GW / opgw	2829	5483	19564	2829	5483	-19564
Wind, 10°C	150C1F1	10423	19924	71832	10423	19924	-71832
Permanent loads yg= 1.2	150C1F2	10423	19873	71825	10423	19873	-71825
Wind angle: 0°	150C1F3	10423	19807	71818	10423	19807	-71818
	380C2F1	20845	39849	143664	20845	39849	-143664
	380C2F2	20846	39745	143649	20846	39745	-143649
	380C2F3	20847	39615	143635	20847	39615	-143635
	RTG	0	0	0	5652	10784	-39049
NL3/1b	GW / opgw	2853	5873	21643	2853	5873	-21643
Wind, -20°C	150C1F1	10519	21782	80513	10519	21782	-80513
Permanent loads yg= 1.2	150C1F2	10519	21767	80515	10519	21767	-80515
Wind angle: 0°	150C1F3	10519	21748	80517	10519	21748	-80517
	380C2F1	21037	43563	161026	21037	43563	-161026
	380C2F2	21037	43533	161029	21037	43533	-161029
	380C2F3	21037	43496	161034	21037	43496	-161034
	RTG	0	0	0	5695	11607	-42948
NL3/3	GW / opgw	4732	8773	31324	4732	8773	-31324
Wind, -5°C	150C1F1	12135	23533	85656	12135	23533	-85656
Permanent loads yg= 1.2	150C1F2	12135	23490	85654	12135	23490	-85654
Wind angle: 0°	150C1F3	12136	23435	85653	12136	23435	-85653
	380C2F1	24270	47066	171312	24270	47066	-171312
	380C2F2	24271	46980	171308	24271	46980	-171308
	380C2F3	24271	46871	171307	24271	46871	-171307
	RTG	0	0	0	9465	17256	-62512
NL3/4	GW / opgw	3480	6410	23646	3480	6410	-23646
Construction/maintenance, +5°C	150C1F1	11730	21809	80617	11730	21809	-80617
Permanent loads yg= 1.2	150C1F2	11730	21795	80619	11730	21795	-80619
Wind angle: 0°	150C1F3	11730	21776	80622	11730	21776	-80622
	380C2F1	23460	43619	161233	23460	43619	-161233
	380C2F2	23460	43589	161238	23460	43589	-161238
	380C2F3	23460	43552	161244	23460	43552	-161244
	RTG	0	0	0	6951	12753	-47225
NL3/1a	GW / opgw	2817	6317	20228	2757	9522	-25485
Wind, 10°C	150C1F1	10395	22125	73141	10232	30371	-85052
Permanent loads yg= 1.2	150C1F2	10399	21880	72921	10252	29342	-83294
Wind angle: 45°	150C1F3	10404	21576	72669	10277	28068	-81186
	380C2F1	20791	44249	146283	20463	60742	-170104
	380C2F2	20799	43760	145843	20503	58683	-166588
	380C2F3	20808	43152	145339	20554	56136	-162373
	RTG	0	0	0	5567	15600	-44790
NL3/1b	GW / opgw	2851	6084	21678	2840	6791	-22252
Wind, -20°C	150C1F1	10515	22360	80550	10489	24218	-81685
Permanent loads yg= 1.2	150C1F2	10516	22300	80537	10493	23994	-81488
Wind angle: 45°	150C1F3	10516	22223	80524	10498	23716	-81263
	380C2F1	21031	44721	161101	20979	48436	-163369
	380C2F2	21032	44599	161074	20987	47988	-162976
	380C2F3	21033	44447	161047	20996	47432	-162525
	RTG	0	0	0	5683	12741	-43421
NL3/3	GW / opgw	4714	10037	32168	4620	14747	-39156
Wind, -5°C	150C1F1	12117	25316	86379	11987	31733	-94119
Permanent loads yg= 1.2	150C1F2	12119	25121	86249	12005	30931	-92918
Wind angle: 45°	150C1F3	12123	24879	86102	12026	29943	-91501
	380C2F1	24233	50632	172757	23974	63465	-188237
	380C2F2	24239	50243	172498	24009	61863	-185836
	380C2F3	24245	49759	172205	24053	59886	-183002
	RTG	0	0	0	9338	24412	-69949
NL3/4	GW / opgw	3479	6615	23658	3470	7274	-24054
Construction/maintenance, +5°C	150C1F1	11727	22380	80623	11707	24170	-81500
Permanent loads yg= 1.2	150C1F2	11728	22321	80615	11710	23956	-81343
Wind angle: 45°	150C1F3	11728	22246	80607	11714	23691	-81165
	380C2F1	23455	44761	161246	23414	48340	-162999
	380C2F2	23456	44642	161230	23421	47913	-162685
	380C2F3	23457	44492	161213	23428	47381	-162329
	RTG	0	0	0	6943	13839	-47514
NL3/1a	GW / opgw	2737	10870	28061	2737	10870	-28061
Wind, 10°C	150C1F1	10167	33918	91382	10167	33918	-91382
Permanent loads yg= 1.2	150C1F2	10191	32566	88927	10191	32566	-88927
Wind angle: 90°	150C1F3	10222	30885	85945	10222	30885	-85945
	380C2F1	20335	67836	182764	20335	67836	-182764
	380C2F2	20382	65131	177855	20382	65131	-177855
	380C2F3	20443	61769	171890	20443	61769	-171890
	RTG	0	0	0	5536	17249	-47663

NL3/1b	GW / opgw	2834	7092	22624	2834	7092	-22624
Wind, -20°C	150C1F1	10474	24994	82458	10474	24994	-82458
Permanent loads yg= 1.2	150C1F2	10480	24697	82146	10480	24697	-82146
Wind angle: 90°	150C1F3	10487	24330	81788	10487	24330	-81788
	380C2F1	20948	49989	164916	20948	49989	-164916
	380C2F2	20960	49395	164293	20960	49395	-164293
	380C2F3	20974	48660	163576	20974	48660	-163576
	RTG	0	0	0	5677	13098	-43746
NL3/3	GW / opgw	4589	16717	42628	4589	16717	-42628
Wind, -5°C	150C1F1	11927	34514	98564	11927	34514	-98564
Permanent loads yg= 1.2	150C1F2	11950	33449	96818	11950	33449	-96818
Wind angle: 90°	150C1F3	11978	32133	94734	11978	32133	-94734
	380C2F1	23855	69027	197127	23855	69027	-197127
	380C2F2	23900	66899	193637	23900	66899	-193637
	380C2F3	23957	64267	189469	23957	64267	-189469
	RTG	0	0	0	9290	26816	-73757
NL3/4	GW / opgw	3466	7548	24324	3466	7548	-24324
Construction/maintenance, +5°C	150C1F1	11695	24906	82122	11695	24906	-82122
Permanent loads yg= 1.2	150C1F2	11700	24625	81870	11700	24625	-81870
Wind angle: 90°	150C1F3	11706	24276	81582	11706	24276	-81582
	380C2F1	23391	49812	164244	23391	49812	-164244
	380C2F2	23400	49250	163740	23400	49250	-163740
	380C2F3	23411	48553	163164	23411	48553	-163164
	RTG	0	0	0	6938	14170	-47741
NL3/1a	GW / opgw	2757	9522	25485	2817	6317	-20228
Wind, 10°C	150C1F1	10232	30371	85052	10395	22125	-73141
Permanent loads yg= 1.2	150C1F2	10252	29342	83294	10399	21880	-72921
Wind angle: -45°	150C1F3	10277	28068	81186	10404	21576	-72669
	380C2F1	20463	60742	170104	20791	44249	-146283
	380C2F2	20503	58683	166588	20799	43760	-145843
	380C2F3	20554	56136	162373	20808	43152	-145339
	RTG	0	0	0	5640	11806	-39586
NL3/1b	GW / opgw	2840	6791	22252	2851	6084	-21678
Wind, -20°C	150C1F1	10489	24218	81685	10515	22360	-80550
Permanent loads yg= 1.2	150C1F2	10493	23994	81488	10516	22300	-80537
Wind angle: -45°	150C1F3	10498	23716	81263	10516	22223	-80524
	380C2F1	20979	48436	163369	21031	44721	-161101
	380C2F2	20987	47988	162976	21032	44599	-161074
	380C2F3	20996	47432	162525	21033	44447	-161047
	RTG	0	0	0	5693	11879	-42957
NL3/3	GW / opgw	4620	14747	39156	4714	10037	-32168
Wind, -5°C	150C1F1	11987	31733	94119	12117	25316	-86379
Permanent loads yg= 1.2	150C1F2	12005	30931	92918	12119	25121	-86249
Wind angle: -45°	150C1F3	12026	29943	91501	12123	24879	-86102
	380C2F1	23974	63465	188237	24233	50632	-172757
	380C2F2	24009	61863	185836	24239	50243	-172498
	380C2F3	24053	59886	183002	24245	49759	-172205
	RTG	0	0	0	9449	18814	-63165
NL3/4	GW / opgw	3470	7274	24054	3479	6615	-23658
Construction/maintenance, +5°C	150C1F1	11707	24170	81500	11727	22380	-80623
Permanent loads yg= 1.2	150C1F2	11710	23956	81343	11728	22321	-80615
Wind angle: -45°	150C1F3	11714	23691	81165	11728	22246	-80607
	380C2F1	23414	48340	162999	23455	44761	-161246
	380C2F2	23421	47913	162685	23456	44642	-161230
	380C2F3	23428	47381	162329	23457	44492	-161213
	RTG	0	0	0	6950	13020	-47215
NL3/1a	GW / opgw	2128	4338	15293	2128	4338	-15293
Wind, 10°C	150C1F1	7841	15770	56329	7841	15770	-56329
Permanent loads yg= 0.9	150C1F2	7842	15716	56313	7842	15716	-56313
Wind angle: 0°	150C1F3	7842	15648	56296	7842	15648	-56296
	380C2F1	15683	31540	112657	15683	31540	-112657
	380C2F2	15684	31432	112626	15684	31432	-112626
	380C2F3	15685	31296	112592	15685	31296	-112592
	RTG	0	0	0	4251	8487	-30473
NL3/1b	GW / opgw	2149	4655	17097	2149	4655	-17097
Wind, -20°C	150C1F1	7929	17369	64044	7929	17369	-64044
Permanent loads yg= 0.9	150C1F2	7929	17354	64045	7929	17354	-64045
Wind angle: 0°	150C1F3	7929	17335	64047	7929	17335	-64047
	380C2F1	15858	34737	128089	15858	34737	-128089
	380C2F2	15858	34707	128091	15858	34707	-128091
	380C2F3	15858	34669	128094	15858	34669	-128094
	RTG	0	0	0	4289	9176	-33875

NL3/3	GW / opgw	4036	7757	27533	4036	7757	-27533
Wind, -5°C	150C1F1	9557	19436	70364	9557	19436	-70364
Permanent loads yg= 0.9	150C1F2	9557	19391	70358	9557	19391	-70358
Wind angle: 0°	150C1F3	9558	19335	70352	9558	19335	-70352
	380C2F1	19114	38871	140728	19114	38871	-140728
	380C2F2	19115	38782	140716	19115	38782	-140716
	380C2F3	19115	38670	140704	19115	38670	-140704
	RTG	0	0	0	8075	15219	-54909
NL3/4	GW / opgw	2781	5310	19540	2781	5310	-19540
Construction/maintenance, +5°C	150C1F1	9153	17737	65416	9153	17737	-65416
Permanent loads yg= 0.9	150C1F2	9153	17722	65418	9153	17722	-65418
Wind angle: 0°	150C1F3	9153	17703	65420	9153	17703	-65420
	380C2F1	18307	35473	130833	18307	35473	-130833
	380C2F2	18307	35443	130836	18307	35443	-130836
	380C2F3	18307	35405	130840	18307	35405	-130840
	RTG	0	0	0	5555	10552	-39010
NL3/1a	GW / opgw	2112	5258	16276	2052	8836	-22926
Wind, 10°C	150C1F1	7805	18162	58355	7628	27448	-74150
Permanent loads yg= 0.9	150C1F2	7811	17890	58031	7647	26301	-71949
Wind angle: 45°	150C1F3	7817	17553	57657	7672	24873	-69266
	380C2F1	15611	36325	116711	15256	54897	-148299
	380C2F2	15621	35779	116063	15294	52601	-143899
	380C2F3	15633	35106	115313	15344	49746	-138533
	RTG	0	0	0	4153	13867	-38323
NL3/1b	GW / opgw	2147	4876	17168	2132	5660	-18032
Wind, -20°C	150C1F1	7925	17969	64162	7889	20000	-65945
Permanent loads yg= 0.9	150C1F2	7925	17905	64137	7895	19750	-65649
Wind angle: 45°	150C1F3	7926	17825	64109	7901	19440	-65307
	380C2F1	15849	35938	128324	15779	40001	-131890
	380C2F2	15851	35810	128273	15789	39499	-131299
	380C2F3	15852	35650	128217	15802	38880	-130615
	RTG	0	0	0	4273	10392	-34654
NL3/3	GW / opgw	4015	9085	28615	3918	14100	-36743
Wind, -5°C	150C1F1	9533	21323	71479	9383	28425	-81780
Permanent loads yg= 0.9	150C1F2	9537	21113	71291	9402	27535	-80247
Wind angle: 45°	150C1F3	9541	20853	71076	9425	26435	-78414
	380C2F1	19066	42646	142958	18766	56850	-163559
	380C2F2	19073	42226	142583	18803	55070	-160494
	380C2F3	19081	41705	142153	18851	52870	-156828
	RTG	0	0	0	7934	22809	-63968
NL3/4	GW / opgw	2779	5521	19573	2769	6223	-20135
Construction/maintenance, +5°C	150C1F1	9150	18322	65478	9124	20232	-66806
Permanent loads yg= 0.9	150C1F2	9151	18260	65461	9128	20000	-66579
Wind angle: 45°	150C1F3	9151	18183	65443	9133	19712	-66319
	380C2F1	18300	36644	130955	18248	40464	-133611
	380C2F2	18301	36520	130922	18256	40000	-133158
	380C2F3	18302	36366	130886	18265	39425	-132638
	RTG	0	0	0	5544	11683	-39471
NL3/1a	GW / opgw	2036	10290	25900	2036	10290	-25900
Wind, 10°C	150C1F1	7571	31361	81845	7571	31361	-81845
Permanent loads yg= 0.9	150C1F2	7591	29877	78898	7591	29877	-78898
Wind angle: 90°	150C1F3	7619	28019	75256	7619	28019	-75256
	380C2F1	15142	62722	163689	15142	62722	-163689
	380C2F2	15182	59754	157796	15182	59754	-157796
	380C2F3	15238	56038	150511	15238	56038	-150511
	RTG	0	0	0	4124	15702	-41894
NL3/1b	GW / opgw	2124	6003	18559	2124	6003	-18559
Wind, -20°C	150C1F1	7870	20875	67087	7870	20875	-67087
Permanent loads yg= 0.9	150C1F2	7877	20539	66630	7877	20539	-66630
Wind angle: 90°	150C1F3	7887	20126	66099	7887	20126	-66099
	380C2F1	15740	41750	134173	15740	41750	-134173
	380C2F2	15755	41078	133261	15755	41078	-133261
	380C2F3	15773	40252	132198	15773	40252	-132198
	RTG	0	0	0	4265	10791	-35136
NL3/3	GW / opgw	3890	16165	40570	3890	16165	-40570
Wind, -5°C	150C1F1	9322	31501	87326	9322	31501	-87326
Permanent loads yg= 0.9	150C1F2	9344	30327	85170	9344	30327	-85170
Wind angle: 90°	150C1F3	9374	28870	82560	9374	28870	-82560
	380C2F1	18644	63002	174651	18644	63002	-174651
	380C2F2	18689	60654	170341	18689	60654	-170341
	380C2F3	18747	57740	165120	18747	57740	-165120
	RTG	0	0	0	7885	25369	-68357

NL3/4	GW / opgw	2763	6523	20498	2763	6523	-20498
Construction/maintenance, +5°C	150C1F1	9109	21038	67689	9109	21038	-67689
Permanent loads yg= 0.9	150C1F2	9115	20729	67334	9115	20729	-67334
Wind angle: 90°	150C1F3	9122	20348	66924	9122	20348	-66924
	380C2F1	18218	42076	135378	18218	42076	-135378
	380C2F2	18230	41459	134669	18230	41459	-134669
	380C2F3	18244	40697	133848	18244	40697	-133848
	RTG	0	0	0	5538	12039	-39789
NL3/1a	GW / opgw	2052	8836	22926	2112	5258	-16276
Wind, 10°C	150C1F1	7628	27448	74150	7805	18162	-58355
Permanent loads yg= 0.9	150C1F2	7647	26301	71949	7811	17890	-58031
Wind angle: -45°	150C1F3	7672	24873	69266	7817	17553	-57657
	380C2F1	15256	54897	148299	15611	36325	-116711
	380C2F2	15294	52601	143899	15621	35779	-116063
	380C2F3	15344	49746	138533	15633	35106	-115313
	RTG	0	0	0	4236	9590	-31315
NL3/1b	GW / opgw	2132	5660	18032	2147	4876	-17168
Wind, -20°C	150C1F1	7889	20000	65945	7925	17969	-64162
Permanent loads yg= 0.9	150C1F2	7895	19750	65649	7925	17905	-64137
Wind angle: -45°	150C1F3	7901	19440	65307	7926	17825	-64109
	380C2F1	15779	40001	131890	15849	35938	-128324
	380C2F2	15789	39499	131299	15851	35810	-128273
	380C2F3	15802	38880	130615	15852	35650	-128217
	RTG	0	0	0	4287	9457	-33917
NL3/3	GW / opgw	3918	14100	36743	4015	9085	-28615
Wind, -5°C	150C1F1	9383	28425	81780	9533	21323	-71479
Permanent loads yg= 0.9	150C1F2	9402	27535	80247	9537	21113	-71291
Wind angle: -45°	150C1F3	9425	26435	78414	9541	20853	-71076
	380C2F1	18766	56850	163559	19066	42646	-142958
	380C2F2	18803	55070	160494	19073	42226	-142583
	380C2F3	18851	52870	156828	19081	41705	-142153
	RTG	0	0	0	8055	16836	-55784
NL3/4	GW / opgw	2769	6223	20135	2779	5521	-19573
Construction/maintenance, +5°C	150C1F1	9124	20232	66806	9150	18322	-65478
Permanent loads yg= 0.9	150C1F2	9128	20000	66579	9151	18260	-65461
Wind angle: -45°	150C1F3	9133	19712	66319	9151	18183	-65443
	380C2F1	18248	40464	133611	18300	36644	-130955
	380C2F2	18256	40000	133158	18301	36520	-130922
	380C2F3	18265	39425	132638	18302	36366	-130886
	RTG	0	0	0	5553	10824	-39018

ZWW4HK450+5

Loadcases for tower strength (serviceability limit state)

		Ahead			Back		
Loadcase according to 50341-3-15	Att. Point	Vertical [N]	Transversal [N]	Longitudinal [N]	Vertical [N]	Transversal [N]	Longitudinal [N]
NL4/1a	GW / opgw	2361	4805	16781	2361	4805	-16781
Wind, 10°C	150C1F1	8701	17393	61675	8701	17393	-61675
Permanent loads yg= 1.0	150C1F2	8702	17323	61650	8702	17323	-61650
Wind angle: 0°	150C1F3	8703	17235	61623	8703	17235	-61623
	380C2F1	17403	34787	123350	17403	34787	-123350
	380C2F2	17404	34646	123300	17404	34646	-123300
	380C2F3	17405	34469	123246	17405	34469	-123246
	RTG	0	0	0	4718	9366	-33415
NL4/1b	GW / opgw	2384	5059	18651	2384	5059	-18651
Wind, -20°C	150C1F1	8794	18846	69688	8794	18846	-69688
Permanent loads yg= 1.0	150C1F2	8794	18834	69690	8794	18834	-69690
Wind angle: 0°	150C1F3	8794	18818	69692	8794	18818	-69692
	380C2F1	17588	37693	139377	17588	37693	-139377
	380C2F2	17588	37668	139379	17588	37668	-139379
	380C2F3	17588	37637	139384	17588	37637	-139384
	RTG	0	0	0	4758	9990	-36977
NL4/3	GW / opgw	7982	13016	47394	7982	13016	-47394
Wind, -5°C	150C1F1	13712	25831	94592	13712	25831	-94592
Permanent loads yg= 1.0	150C1F2	13712	25795	94593	13712	25795	-94593
Wind angle: 0°	150C1F3	13712	25751	94596	13712	25751	-94596
	380C2F1	27424	51661	189183	27424	51661	-189183
	380C2F2	27425	51591	189186	27425	51591	-189186
	380C2F3	27425	51501	189192	27425	51501	-189192
	RTG	0	0	0	15984	25840	-94859
NL4/4	GW / opgw	2906	5500	20294	2906	5500	-20294
Construction/maintenance, +5°C	150C1F1	9798	18745	69308	9798	18745	-69308
Permanent loads yg= 1.0	150C1F2	9798	18732	69310	9798	18732	-69310
Wind angle: 0°	150C1F3	9798	18717	69312	9798	18717	-69312
	380C2F1	19595	37489	138616	19595	37489	-138616
	380C2F2	19596	37464	138619	19596	37464	-138619
	380C2F3	19596	37433	138624	19596	37433	-138624
	RTG	0	0	0	5805	10939	-40518
NL4/1a	GW / opgw	2339	6027	18199	2267	10696	-27031
Wind, 10°C	150C1F1	8650	20558	64635	8427	32780	-86063
Permanent loads yg= 1.0	150C1F2	8657	20195	64170	8449	31291	-83176
Wind angle: 45°	150C1F3	8666	19747	63630	8479	29430	-79622
	380C2F1	17300	41115	129270	16854	65560	-172126
	380C2F2	17315	40389	128340	16898	62582	-166352
	380C2F3	17332	39494	127259	16957	58860	-159245
	RTG	0	0	0	4590	16483	-44296
NL4/1b	GW / opgw	2383	5236	18684	2373	5832	-19192
Wind, -20°C	150C1F1	8791	19331	69728	8769	20897	-70741
Permanent loads yg= 1.0	150C1F2	8792	19280	69715	8772	20707	-70566
Wind angle: 45°	150C1F3	8792	19216	69703	8776	20472	-70366
	380C2F1	17582	38662	139455	17538	41794	-141482
	380C2F2	17583	38560	139431	17544	41415	-141132
	380C2F3	17584	38432	139405	17553	40944	-140732
	RTG	0	0	0	4748	10944	-37400
NL4/3	GW / opgw	7975	13930	47573	7923	16995	-50184
Wind, -5°C	150C1F1	13701	27245	94928	13614	32086	-99487
Permanent loads yg= 1.0	150C1F2	13702	27094	94860	13627	31488	-98747
Wind angle: 45°	150C1F3	13704	26904	94784	13642	30750	-97886
	380C2F1	27401	54490	189856	27228	64172	-198974
	380C2F2	27405	54187	189719	27253	62976	-197495
	380C2F3	27409	53809	189568	27284	61500	-195773
	RTG	0	0	0	15927	30743	-97093
NL4/4	GW / opgw	2905	5671	20307	2898	6225	-20657
Construction/maintenance, +5°C	150C1F1	9796	19222	69319	9778	20726	-70100
Permanent loads yg= 1.0	150C1F2	9796	19172	69311	9781	20546	-69961
Wind angle: 45°	150C1F3	9796	19109	69303	9784	20322	-69803
	380C2F1	19591	38443	138638	19557	41453	-140199
	380C2F2	19592	38344	138622	19562	41092	-139922
	380C2F3	19593	38219	138607	19569	40645	-139607
	RTG	0	0	0	5798	11849	-40778
NL4/1a	GW / opgw	2251	12547	30791	2251	12547	-30791
Wind, 10°C	150C1F1	8364	37819	96008	8364	37819	-96008
Permanent loads yg= 1.0	150C1F2	8386	35914	92225	8386	35914	-92225
Wind angle: 90°	150C1F3	8417	33519	87506	8417	33519	-87506
	380C2F1	16727	75637	192016	16727	75637	-192016
	380C2F2	16772	71828	184450	16772	71828	-184450
	380C2F3	16834	67038	175013	16834	67038	-175013
	RTG	0	0	0	4556	18867	-48987

NL4/1b	GW / opgw	2368	6089	19520	2368	6089	-19520
Wind, -20°C	150C1F1	8756	21555	71427	8756	21555	-71427
Permanent loads yg= 1.0	150C1F2	8761	21303	71151	8761	21303	-71151
Wind angle: 90°	150C1F3	8767	20992	70833	8767	20992	-70833
	380C2F1	17512	43109	142853	17512	43109	-142853
	380C2F2	17522	42606	142301	17522	42606	-142301
	380C2F3	17534	41984	141665	17534	41984	-141665
	RTG	0	0	0	4743	11245	-37687
NL4/3	GW / opgw	7897	18289	51780	7897	18289	-51780
Wind, -5°C	150C1F1	13569	34163	102296	13569	34163	-102296
Permanent loads yg= 1.0	150C1F2	13587	33367	101180	13587	33367	-101180
Wind angle: 90°	150C1F3	13608	32385	99870	13608	32385	-99870
	380C2F1	27138	68327	204591	27138	68327	-204591
	380C2F2	27173	66735	202361	27173	66735	-202361
	380C2F3	27216	64770	199739	27216	64770	-199739
	RTG	0	0	0	15898	32289	-98554
NL4/4	GW / opgw	2894	6457	20894	2894	6457	-20894
Construction/maintenance, +5°C	150C1F1	9768	21348	70649	9768	21348	-70649
Permanent loads yg= 1.0	150C1F2	9772	21110	70427	9772	21110	-70427
Wind angle: 90°	150C1F3	9777	20816	70172	9777	20816	-70172
	380C2F1	19537	42695	141297	19537	42695	-141297
	380C2F2	19545	42221	140854	19545	42221	-140854
	380C2F3	19554	41632	140345	19554	41632	-140345
	RTG	0	0	0	5794	12128	-40978
NL4/1a	GW / opgw	2267	10696	27031	2339	6027	-18199
Wind, 10°C	150C1F1	8427	32780	86063	8650	20558	-64635
Permanent loads yg= 1.0	150C1F2	8449	31291	83176	8657	20195	-64170
Wind angle: -45°	150C1F3	8479	29430	79622	8666	19747	-63630
	380C2F1	16854	65560	172126	17300	41115	-129270
	380C2F2	16898	62582	166352	17315	40389	-128340
	380C2F3	16957	58860	159245	17332	39494	-127259
	RTG	0	0	0	4696	10823	-34655
NL4/1b	GW / opgw	2373	5832	19192	2383	5236	-18684
Wind, -20°C	150C1F1	8769	20897	70741	8791	19331	-69728
Permanent loads yg= 1.0	150C1F2	8772	20707	70566	8792	19280	-69715
Wind angle: -45°	150C1F3	8776	20472	70366	8792	19216	-69703
	380C2F1	17538	41794	141482	17582	38662	-139455
	380C2F2	17544	41415	141132	17583	38560	-139431
	380C2F3	17553	40944	140732	17584	38432	-139405
	RTG	0	0	0	4757	10218	-36987
NL4/3	GW / opgw	7923	16995	50184	7975	13930	-47573
Wind, -5°C	150C1F1	13614	32086	99487	13701	27245	-94928
Permanent loads yg= 1.0	150C1F2	13627	31488	98747	13702	27094	-94860
Wind angle: -45°	150C1F3	13642	30750	97886	13704	26904	-94784
	380C2F1	27228	64172	198974	27401	54490	-189856
	380C2F2	27253	62976	197495	27405	54187	-189719
	380C2F3	27284	61500	195773	27409	53809	-189568
	RTG	0	0	0	15978	27010	-94924
NL4/4	GW / opgw	2898	6225	20657	2905	5671	-20307
Construction/maintenance, +5°C	150C1F1	9778	20726	70100	9796	19222	-69319
Permanent loads yg= 1.0	150C1F2	9781	20546	69961	9796	19172	-69311
Wind angle: -45°	150C1F3	9784	20322	69803	9796	19109	-69303
	380C2F1	19557	41453	140199	19591	38443	-138638
	380C2F2	19562	41092	139922	19592	38344	-138622
	380C2F3	19569	40645	139607	19593	38219	-138607
	RTG	0	0	0	5804	11162	-40511

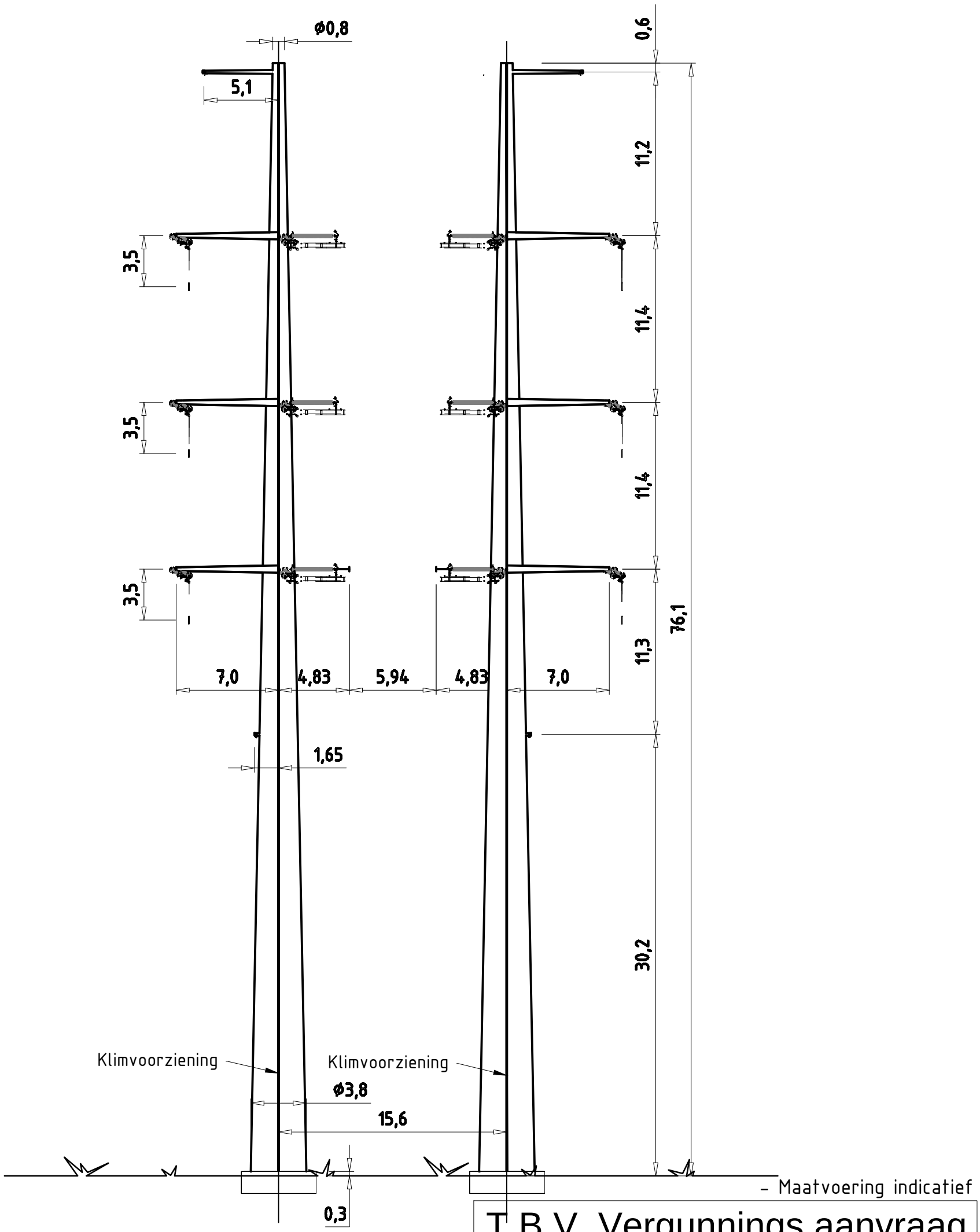

– Maatvoering indicatief

T.B.V. Vergunnings aanvraag

Wintrack
Masttype: ZWW4HK450+5

- Trekparameter 1800m
- 2x380 / 2x150 Hoekmast
- 450m Veldlengte
- 150°-180° Lijnhoek
- Uitvoering Staal of Beton
- Kleurstelling hoofdelement:
  Ral 9018 Papyrus white
- Kleurstelling Appendages:
  Ral 7021 Black grey

3.0	25-06-2014	Small modification
2.0	03-03-2014	Modified botom diameter and increased traverse length
1.0	03-02-2014	First edition

KEMA DNV

Projectname: Engineering verbinding ZW380

Third angle projection:

Drawing no.: 74102194-035-114V

Design state: DEFINITIEF		Scale: 1:300	
Drawn by: BJT	25-06-2014	Units: m	
Checked by: AJP	25-06-2014	Project no: 000.145	
Approved by: AW	25-06-2014	Company: TenneT	

Description: Wintrack Masttype ZWW4HK450+5

Revision: 3.0

Format: A3

DNV KEMA Energy & Sustainability, Utrechtseweg 310, 6812 AR Arnhem, tel: +31 26 3 56 91 11, www.dnvkema.com

© 2012 - Filename: 74102194-035-114 - ZWW4HK450+5 Rev3.0.dwg

ZWW4HL450+5

Fundatie berekening

Bijlage CBV

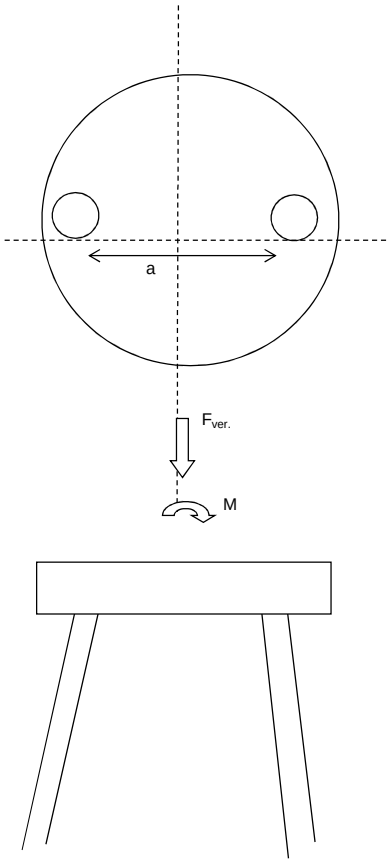

Fundatie ontwerp:
Heipaal

Afmetingen	b	400	mm
	d	400	mm
omtrek paal	$O_{p;gem}$	1.6	m
schoorstand		8	:1
α		7.125	graden
Opstort	Diameter	5.8	m
	Hoogte	1.8	m
	Inhoud	47.6	m^3
	e.g.	1141	kN
Onderplaat	Diameter	14.0	m
	Hoogte	1.4	m
	Inhoud	216	m^3
	e.g.	5172	kN
Hart paal tov rand fund.		0.6	m

Optreden krachten

e.g. mast	1268	kN
Fgeleiders	364	kN
Maximale dwarskracht	1399	kN
Fmax vert (druk)	1885	kN
Fmin vert (trek)	1414	kN
Maximale moment	77902	kNm

Moment

F_{diag}	6486	kN
F_{hor}	1399	kN
F_{ver}	6436	kN
Mhor (tgv Fhor)	4477	kNm
M_{tot}	82380	kNm
F=M/a	6436	kN

Verticaal reactiekracht

Fwater (trek)	2631	kN
Fgrond (druk)	3443	kN
Fgrond (trek)	2869	kN
Fdmax (druk)	6797	kN
Ftmax (trek)	3261	kN
Fdtot (druk)	13233	kN
Fttot (trek)	3175	kN
Palen druk	12	(-)
Palen trek	10	(-)
Totaal palen	24	(-)

Per fundering

ZWW4HL450+5

TREKPALEN volgens CUR 2001-4 par. 8.

$$F_{r;trek;d} = \int_0^L O_{p;gem} \times p_{r;z;d} \times dz$$

Bijlage CBV

Bepaling opneembare paalbelasting op druk

heipaal

Afmeting paal	b	0.40	m
	b	0.40	m
omtrek paal	$O_{p;gem}$	1.60	m
paalfactor	α t	0.007	
aantal palen	M	1	
aantal sonderingen	N	1	
factor invloed aantal sonderingen	ξ	0.75	
conusweerstand over wrijvingstraject	$q_{c;z;max}$	15	MPa
	$q_{c;z;rep}$	11.25	MPa
materiaalfactor	$\gamma_{m;b4}$	1.4	
factor, wisselende belastingen	$\gamma_{m;var;qc}$	1.5	
	$q_{c;z;d}$	5.36	MPa
	$p_{r;z;d}$	37.5	kN/m²
	$F_{r;trek;d;i}$	60.0	kN/m⊥
	$F_{trek,d}$	596	kN/m

Bepaling opneembare trekbelasting paal

sondering	diepte		$q_{c;z}$		$P_{r;max;schacht;i}$	$F_{r;trek;d;i}$	$F_{trek,d}$
	m	m	MPa	α t	kPa	kN	kN
	0	-1	0	0.007	0.00	0.00	0
	-1	-2	0	0.007	0.00	0.00	0
	-2	-3	0	0.007	0.00	0.00	0
	-3	-4	0	0.007	0.00	0.00	0
	-4	-5	0	0.007	0.00	0.00	0
	-5	-6	0	0.007	0.00	0.00	0
	-6	-7	0	0.007	0.00	0.00	0
	-7	-8	0	0.007	0.00	0.00	0
	-8	-9	1	0.007	2.50	4.00	4
	-9	-10	3	0.007	7.50	12.00	16
	-10	-11	2	0.007	5.00	8.00	24
	-11	-12	0	0.007	0.00	0.00	24
	-12	-13	3	0.007	7.50	12.00	36
	-13	-14	2	0.007	5.00	8.00	44
	-14	-15	4	0.007	10.00	16.00	60
	-15	-16	10	0.007	25.00	40.00	100
	-16	-17	9	0.007	22.50	36.00	136
	-17	-18	8	0.007	20.00	32.00	168
	-18	-19	12	0.007	30.00	48.00	216
	-19	-20	12	0.007	30.00	48.00	264
	-20	-21	10	0.007	25.00	40.00	304
	-21	-22	11	0.007	27.50	44.00	348
	-22	-23	11	0.007	27.50	44.00	392
	-23	-24	12	0.007	30.00	48.00	440
	-24	-25	12	0.007	30.00	48.00	488
	-25	-26	12	0.007	30.00	48.00	536
	-26	-27	15	0.007	37.50	60.00	596

$F_{trek,d}$	596	kN	paalafmeting	400	mm, paalpuntnivo	-27.00	m

Paalgroep factor	10%	
$F_{trek,d}$	**536.4**	kN

ZWW4HL450+5

DRUKPALEN

FUNDERINGSCONSTRUCTIE
Toelaatbare paalbelastingen

Bijlage CBV

Bepaling opneembare paalbelasting op druk

heipaal			v		
		diameter	a	2	mm
				2	mm
		Deq		0.001808	

maximale puntweerstand

$P_{r;max;punt;i}$		11.25	MN/m²
paalklasse factor	α_p	1.00	
factor paalvoet	β	1	
hoek van inwendige vrijwing van paalvoet	ϕ	40	
factor dwarsdoorsnede paalvoet	s	1.00	
minimale waarde neergaande deel	$q_{c;II;gem}$	9.00	MN/m²
gem. sondeerwaarde neergaande deel	$q_{c;I;gem}$	14.00	MN/m₂
gem. sondeerwaarde opgaande deel	$q_{c;III;gem}$	11.00	MN/m²

maximale paalschachtwrijving

$P_{r;max;schacht;i}$		0.05	MN/m²
waarin:			
paalfactor	α_s	0.010	
conusweerstand over wrijvingstraject	$q_{c;z;a}$	5.00	MN/m²

maximale draagkracht alleenstaande paal

$\mathbf{F_{r;max;i}}$		0.00	MN
waarin:			
$\mathbf{F_{r;max;punt;i}}$		0.00	MN
paalpunt oppervlak	A_{punt}	0.00	m²
$\mathbf{F_{r;max;schacht;i}}$		0.00	MN
gemiddelde paalomtrek	$O_{p;gem}$	0.01	m
lengte schachtwrijving	Δl	15.00	m

Bepaling rekenwaarde van de maximale draagkracht

$F_{r;paal;max;d}$	MN	0.00	MN
materiaalfactor grond	$\gamma_{m;b}$	1.20	
waarde afhankelijk van aantal palen en aantal sonderingen	$\xi_{1;N}$	0.75	

$F_{r;paal;max;d}$	3	kN	mm, paalpuntnivo	-27.00 m

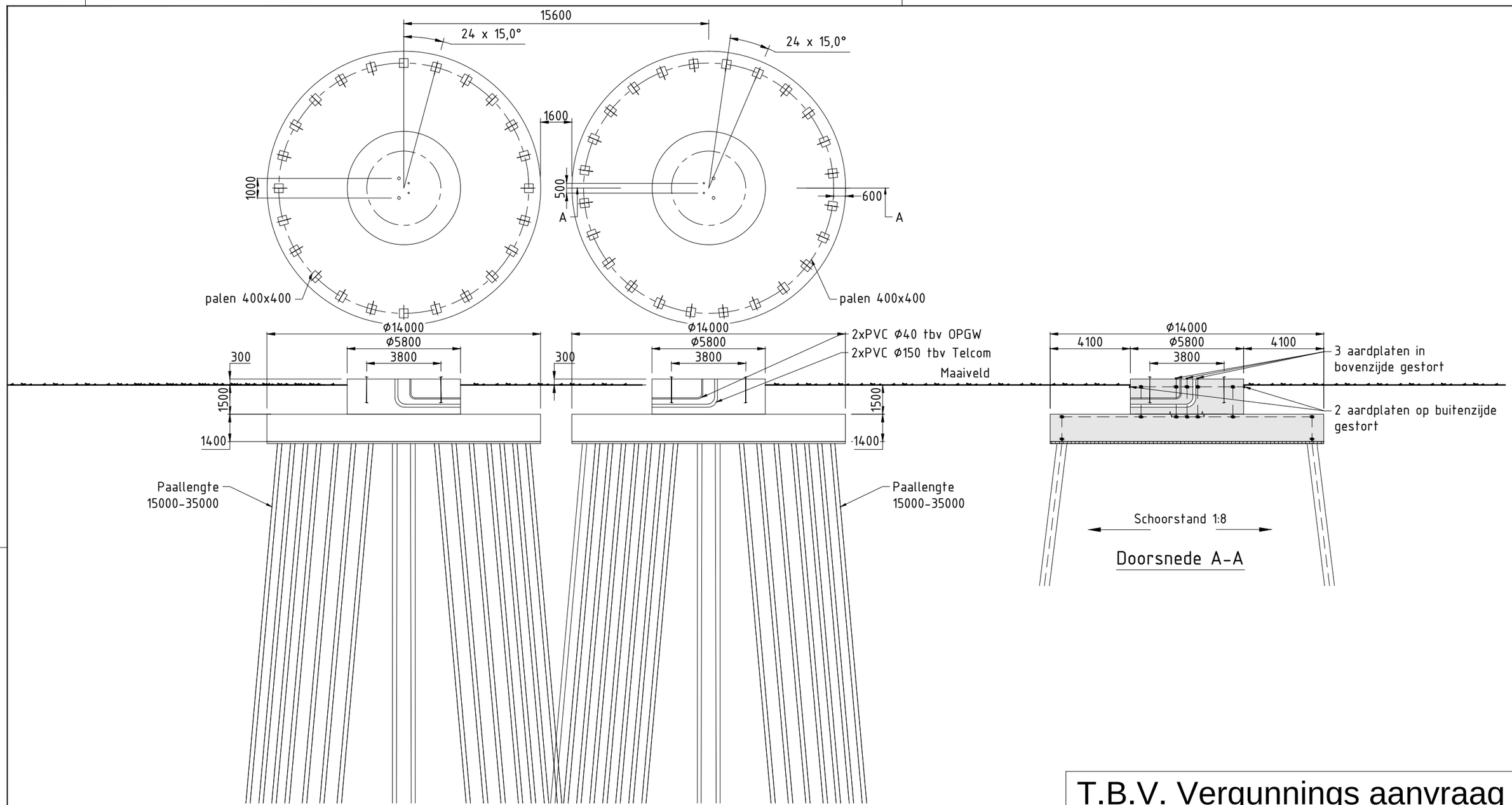

T.B.V. Vergunnings aanvraag

2.0	02-06-2014	Aantal palen gewijzigd
1.0	10-03-2014	Eerste uitgave

Projectname:
Engineering verbinding ZW380

Third angle projection:

Drawing no.:
74102194-032-115V

Design state: Definitief		Scale:	1:200
Drawn by: RBE	02-06-2014	Units:	mm
Checked by: AJP	02-06-2014	Project no:	000.145
Approved by: AW	02-06-2014	Company:	TenneT

Description:
Principe ontwerp fundatie hoekmast
ZWW4HL450+5 masten familie

Revision: 2.0

Format: A3

DNV KEMA Energy & Sustainability, Utrechtseweg 310, 6812 AR Arnhem, tel: +31 26 3 56 91 11, www.dnvkema.com

Verklaring

Gewapend beton

Werkvloer

Verklaring aarding

Ringleiding Ø16mm (FeB220) glad

Koppeling met aardstaaf in paal

Aardplaten

Opmerkingen

Maten in mm
Coordinaten in mm, in het stelsel van de rijksdriehoekmeting
Maatvoering in het 360 graden stelsel
Vellingkanten niet getekend
Ringleiding in bovenkant poer op het bovennet
plaatsen in de eerste laag
Mastvoetanker afmeting exclusief mastvoetflens breedte
Afmetingen indicatief

© 2013 - Filename: 74102194-032-115 - ZWW4HL450+5 Principe ontwerp fundaties_rev2.0.dwg

ZWW4HL450+5

Bijlage BBV

Location dependent data to obtain pressures

Wind area			2	
Terrain catagory	O=onbebouwd, B=bebouwd		O	
Hoogte		h	76.1	m
Diameter voet		d voet	3.8	m
top		d top	0.8	m
gem		d gem	2.3	m
wanddikte		t	30	mm
Oppervlakte aan voet		A	355314	mm^2
Traagheidsmoment aan voet		W_x	3.32E+08	mm^3
Weerstandsmoment aan voet		I_x	6.24E+11	mm^4
		2de orde	10.0	%
Mast: Gewicht		$F_{rep;ver}$	1268	kN

Ultimate limit state	**hoogte**	F_{ver}	$F_{loodrecht}$	$F_{//}$	$F_{Samengesteld}$		
	m	kN	kN	kN	kN		
GW / opgw	75.5	22.2	69.5	0.0	69.5	3374	kNm
150C1F1	64.3	35.4	128.1	0.0	128.1	6621	kNm
150C1F2	52.9	35.5	125.7	0.0	125.7	5350	kNm
150C1F3	41.5	35.5	122.6	0.0	122.6	4106	kNm
380C2F1	64.3	70.8	256.3	0.0	256.3	13242	kNm
380C2F2	52.9	70.9	251.3	0.0	251.3	10701	kNm
380C2F3	41.5	71.0	245.2	0.0	245.2	8213	kNm
RTG	30.2	22.4	63.3	-118.0	133.9	2332	kNm

Stuwdruk	$F_{hor.}$	52.9	kN
	$M_{d;wind}$	1790	kNm
Totaal	$M_{d;tot}$	70820	kNm
Totaal moment incl. 2de orde effect	$M_{d;tot}$	77902	kNm

Normaalkracht;

Optredende normaalkracht

$N_{d;geleiders}$		364	kN
$N_{d;\ e.g.\ mast}$		1522	kN
$N_{s;d;totaal}$		1885	kN

Is buis plooigevoelig tgv normaalkracht: conform NEN-EN 50341 par. 7.4.5.4

		JA	
	ρ_a	0.63	
	A_{eff}	223579	mm^2

Optredende spanning tgv normaalkracht

$N_{sd}/A_{eff} = f_{yd}/y_{m1}$ 8 N/mm^2

Moment;

Optredende moment in de voet:

$M_{d;tot}$ 77902 kNm

Is buis plooigevoelig tgv momentkracht: conform NEN-EN 50341 par. 7.4.5.4

		JA	
	ρ_a	0.93	
	W_{eff}	3.09E+08	mm^3

Optredende spaning tgv moment:

$M_d/W_{eff} = f_{yd}/y_{m1}$ 252 N/mm^2

Totale spanning:	σ_d	261	N/mm^2	< 284 N/mm^2 = ACCOORD
	$\sigma_{d;toegestaan}$	284	N/mm^2	==> 80% van 355 N/mm^2

Special limit state	**hoogte**	F_{ver}	$F_{loodrecht}$	$F_{//}$	$F_{Samengesteld}$		
	m	kN	kN	kN	kN		
GW / opgw	75.5	15.8	52.1	0.0	52.1	3932	kNm
150C1F1	64.3	27.2	99.7	0.0	99.7	6409	kNm
150C1F2	52.9	27.2	98.0	0.0	98.0	5186	kNm
150C1F3	41.5	27.3	96.0	0.0	96.0	3986	kNm
380C2F1	64.3	54.4	199.3	0.0	199.3	12818	kNm
380C2F2	52.9	54.4	196.1	0.0	196.1	10372	kNm
380C2F3	41.5	54.5	192.1	0.0	192.1	7972	kNm
RTG	30.2	15.9	47.8	-90.7	102.5	3096	kNm

Stuwdruk	$F_{hor.}$	426	kN		
Verplaating		1.48	m	4.15	EIS TENNET VISUEEL
Percentage van de verplaatsing		1.94%		5.5%	NEN-EN-50341
Hoek		2.13	graden		
Kromming		0.46%		1%	NEN-EN-50341
Fundatie rotatiestijfheid		0.005	rad		

ZWW4HL450+5

Loadcases for tower strength (ultimate limit state)

		Ahead			Back		
Loadcase according to 50341-3-15	Att. Point	Vertical [N]	Transversal [N]	Longitudinal [N]	Vertical [N]	Transversal [N]	Longitudinal [N]
NL1/1a	GW / opgw	2807	10355	19389	2807	10355	-19389
Wind, 10°C	150C1F1	10371	36033	69338	10371	36033	-69338
Permanent loads yg= 1.2	150C1F2	10378	35595	68985	10378	35595	-68985
Wind angle: 0°	150C1F3	10387	35061	68581	10387	35061	-68581
	380C2F1	20743	72065	138677	20743	72065	-138677
	380C2F2	20757	71191	137970	20757	71191	-137970
	380C2F3	20774	70123	137161	20774	70123	-137161
	RTG	0	0	0	5630	19202	-37412
NL1/1b	GW / opgw	2852	9722	20286	2852	9722	-20286
Wind, -20°C	150C1F1	10516	35918	75441	10516	35918	-75441
Permanent loads yg= 1.2	150C1F2	10517	35864	75441	10517	35864	-75441
Wind angle: 0°	150C1F3	10517	35796	75444	10517	35796	-75444
	380C2F1	21032	71836	150882	21032	71836	-150882
	380C2F2	21033	71728	150883	21033	71728	-150883
	380C2F3	21034	71592	150888	21034	71592	-150888
	RTG	0	0	0	5694	19116	-40242
NL1/3	GW / opgw	11215	28219	57617	11215	28219	-57617
Wind, -5°C	150C1F1	17880	53198	109650	17880	53198	-109650
Permanent loads yg= 1.2	150C1F2	17881	53037	109631	17881	53037	-109631
Wind angle: 0°	150C1F3	17883	52836	109615	17883	52836	-109615
	380C2F1	35759	106396	219301	35759	106396	-219301
	380C2F2	35762	106074	219262	35762	106074	-219262
	380C2F3	35765	105672	219230	35765	105672	-219230
	RTG	0	0	0	22467	55619	-115413
NL1/4	GW / opgw	3640	10992	23008	3640	10992	-23008
Construction/maintenance, +5°C	150C1F1	12051	36758	77240	12051	36758	-77240
Permanent loads yg= 1.2	150C1F2	12051	36705	77245	12051	36705	-77245
Wind angle: 0°	150C1F3	12051	36640	77252	12051	36640	-77252
	380C2F1	24101	73515	154481	24101	73515	-154481
	380C2F2	24102	73411	154490	24102	73411	-154490
	380C2F3	24102	73279	154505	24102	73279	-154505
	RTG	0	0	0	7273	21785	-45965
NL1/6	GW / opgw	3180	9456	20279	3180	9456	-20279
Permanent, +10°C	150C1F1	11711	34688	74388	11711	34688	-74388
Permanent loads yg= 1.35	150C1F2	11711	34688	74388	11711	34688	-74388
	150C1F3	11711	34688	74388	11711	34688	-74388
	380C2F1	23422	69375	148776	23422	69375	-148776
	380C2F2	23422	69375	148776	23422	69375	-148776
	380C2F3	23422	69375	148776	23422	69375	-148776
	RTG	0	0	0	6351	18894	-40519
NL1/1a	GW / opgw	2820	9583	18704	2685	23344	-36114
Wind, 10°C	150C1F1	10401	34111	67956	9968	70265	-111430
Permanent loads yg= 1.2	150C1F2	10404	33870	67820	9993	66750	-106782
Wind angle: 45°	150C1F3	10408	33573	67669	10029	62308	-100929
	380C2F1	20801	68222	135911	19936	140531	-222860
	380C2F2	20808	67739	135640	19986	133499	-213565
	380C2F3	20816	67146	135338	20057	124616	-201859
	RTG	0	0	0	5430	35216	-56888
NL1/1b	GW / opgw	2852	9630	20282	2827	11280	-21405
Wind, -20°C	150C1F1	10518	35670	75456	10458	39842	-77600
Permanent loads yg= 1.2	150C1F2	10518	35637	75461	10466	39401	-77233
Wind angle: 45°	150C1F3	10518	35595	75468	10475	38864	-76812
	380C2F1	21035	71340	150912	20916	79683	-155200
	380C2F2	21036	71273	150922	20932	78803	-154466
	380C2F3	21036	71189	150936	20951	77727	-153625
	RTG	0	0	0	5670	20907	-41113
NL1/3	GW / opgw	11218	27758	57628	11107	35512	-61822
Wind, -5°C	150C1F1	17885	52466	109611	17685	65370	-118267
Permanent loads yg= 1.2	150C1F2	17886	52369	109616	17709	63998	-116938
Wind angle: 45°	150C1F3	17887	52247	109626	17739	62317	-115382
	380C2F1	35771	104933	219222	35370	130741	-236533
	380C2F2	35772	104738	219232	35418	127997	-233876
	380C2F3	35774	104494	219251	35477	124635	-230764
	RTG	0	0	0	22358	64186	-118551
NL1/4	GW / opgw	3641	10904	23015	3623	12350	-23697
Construction/maintenance, +5°C	150C1F1	12052	36517	77272	12006	40388	-78767
Permanent loads yg= 1.2	150C1F2	12052	36485	77279	12012	39988	-78487
Wind angle: 45°	150C1F3	12052	36444	77288	12020	39499	-78171
	380C2F1	24103	73034	154544	24012	80776	-157533
	380C2F2	24104	72969	154557	24025	79977	-156975
	380C2F3	24104	72887	154576	24040	78998	-156343
	RTG	0	0	0	7256	23387	-46428

NL1/1a	GW / opgw	2690	22137	34500	2690	22137	-34500
Wind, 10°C	150C1F1	9992	66931	107022	9992	66931	-107022
Permanent loads yg= 1.2	150C1F2	10017	63673	102725	10017	63673	-102725
Wind angle: 90°	150C1F3	10053	59568	97336	10053	59568	-97336
	380C2F1	19983	133862	214044	19983	133862	-214044
	380C2F2	20034	127346	205450	20034	127346	-205450
	380C2F3	20106	119135	194671	20106	119135	-194671
	RTG	0	0	0	5443	33613	-54753
NL1/1b	GW / opgw	2830	11111	21237	2830	11111	-21237
Wind, -20°C	150C1F1	10465	39424	77251	10465	39424	-77251
Permanent loads yg= 1.2	150C1F2	10473	39027	76936	10473	39027	-76936
Wind angle: 90°	150C1F3	10481	38542	76578	10481	38542	-76578
	380C2F1	20931	78847	154502	20931	78847	-154502
	380C2F2	20945	78053	153873	20945	78053	-153873
	380C2F3	20962	77083	153155	20962	77083	-153155
	RTG	0	0	0	5673	20718	-40967
NL1/3	GW / opgw	11119	34749	61187	11119	34749	-61187
Wind, -5°C	150C1F1	17708	64068	117005	17708	64068	-117005
Permanent loads yg= 1.2	150C1F2	17730	62828	115845	17730	62828	-115845
Wind angle: 90°	150C1F3	17757	61309	114494	17757	61309	-114494
	380C2F1	35416	128137	234009	35416	128137	-234009
	380C2F2	35459	125655	231691	35459	125655	-231691
	380C2F3	35513	122617	228988	35513	122617	-228988
	RTG	0	0	0	22372	63306	-117996
NL1/4	GW / opgw	3625	12206	23584	3625	12206	-23584
Construction/maintenance, +5°C	150C1F1	12012	40009	78501	12012	40009	-78501
Permanent loads yg= 1.2	150C1F2	12018	39648	78264	12018	39648	-78264
Wind angle: 90°	150C1F3	12024	39205	77997	12024	39205	-77997
	380C2F1	24024	80017	157002	24024	80017	-157002
	380C2F2	24035	79295	156528	24035	79295	-156528
	380C2F3	24048	78410	155994	24048	78410	-155994
	RTG	0	0	0	7259	23223	-46337
NL1/1a	GW / opgw	2685	23344	36114	2820	9583	-18704
Wind, 10°C	150C1F1	9968	70265	111430	10401	34111	-67956
Permanent loads yg= 1.2	150C1F2	9993	66750	106782	10404	33870	-67820
Wind angle: -45°	150C1F3	10029	62308	100929	10408	33573	-67669
	380C2F1	19936	140531	222860	20801	68222	-135911
	380C2F2	19986	133499	213565	20808	67739	-135640
	380C2F3	20057	124616	201859	20816	67146	-135338
	RTG	0	0	0	5643	18329	-36839
NL1/1b	GW / opgw	2827	11280	21405	2852	9630	-20282
Wind, -20°C	150C1F1	10458	39842	77600	10518	35670	-75456
Permanent loads yg= 1.2	150C1F2	10466	39401	77233	10518	35637	-75461
Wind angle: -45°	150C1F3	10475	38864	76812	10518	35595	-75468
	380C2F1	20916	79683	155200	21035	71340	-150912
	380C2F2	20932	78803	154466	21036	71273	-150922
	380C2F3	20951	77727	153625	21036	71189	-150936
	RTG	0	0	0	5694	19000	-40253
NL1/3	GW / opgw	11107	35512	61822	11218	27758	-57628
Wind, -5°C	150C1F1	17685	65370	118267	17885	52466	-109611
Permanent loads yg= 1.2	150C1F2	17709	63998	116938	17886	52369	-109616
Wind angle: -45°	150C1F3	17739	62317	115382	17887	52247	-109626
	380C2F1	35370	130741	236533	35771	104933	-219222
	380C2F2	35418	127997	233876	35772	104738	-219232
	380C2F3	35477	124635	230764	35774	104494	-219251
	RTG	0	0	0	22470	55039	-115502
NL1/4	GW / opgw	3623	12350	23697	3641	10904	-23015
Construction/maintenance, +5°C	150C1F1	12006	40388	78767	12052	36517	-77272
Permanent loads yg= 1.2	150C1F2	12012	39988	78487	12052	36485	-77279
Wind angle: -45°	150C1F3	12020	39499	78171	12052	36444	-77288
	380C2F1	24012	80776	157533	24103	73034	-154544
	380C2F2	24025	79977	156975	24104	72969	-154557
	380C2F3	24040	78998	156343	24104	72887	-154576
	RTG	0	0	0	7273	21674	-45987
NL1//1a	GW / opgw	2100	8737	15918	2100	8737	-15918
Wind, 10°C	150C1F1	7776	29829	56037	7776	29829	-56037
Permanent loads yg= 0.9	150C1F2	7784	29315	55518	7784	29315	-55518
Wind angle: 0°	150C1F3	7795	28688	54914	7795	28688	-54914
	380C2F1	15552	59659	112074	15552	59659	-112074
	380C2F2	15569	58630	111035	15569	58630	-111035
	380C2F3	15589	57376	109828	15589	57376	-109828
	RTG	0	0	0	4223	15699	-29901

NL1/1b	GW / opgw	2148	7746	16048	2148	7746	-16048
Wind, -20°C	150C1F1	7926	28740	60048	7926	28740	-60048
Permanent loads yg= 0.9	150C1F2	7926	28681	60039	7926	28681	-60039
Wind angle: 0°	150C1F3	7927	28609	60031	7927	28609	-60031
	380C2F1	15851	57480	120095	15851	57480	-120095
	380C2F2	15852	57363	120078	15852	57363	-120078
	380C2F3	15853	57217	120062	15853	57217	-120062
	RTG	0	0	0	4288	15158	-31753
NL1/3	GW / opgw	10527	26962	54922	10527	26962	-54922
Wind, -5°C	150C1F1	15318	47319	97044	15318	47319	-97044
Permanent loads yg= 0.9	150C1F2	15320	47150	97008	15320	47150	-97008
Wind angle: 0°	150C1F3	15322	46940	96972	15322	46940	-96972
	380C2F1	30636	94638	194088	30636	94638	-194088
	380C2F2	30640	94300	194015	30640	94300	-194015
	380C2F3	30644	93880	193943	30644	93880	-193943
	RTG	0	0	0	21094	53090	-109990
NL1/4	GW / opgw	2941	9224	19217	2941	9224	-19217
Construction/maintenance, +5°C	150C1F1	9475	30176	63127	9475	30176	-63127
Permanent loads yg= 0.9	150C1F2	9475	30121	63126	9475	30121	-63126
Wind angle: 0°	150C1F3	9475	30052	63126	9475	30052	-63126
	380C2F1	18949	60353	126254	18949	60353	-126254
	380C2F2	18950	60243	126251	18950	60243	-126251
	380C2F3	18951	60105	126253	18951	60105	-126253
	RTG	0	0	0	5877	18241	-38364
NL1/6	GW / opgw	2129	6676	14317	2129	6676	-14317
Permanent, +10°C	150C1F1	7844	24632	52824	7844	24632	-52824
Permanent loads yg= 0.9	150C1F2	7844	24632	52824	7844	24632	-52824
	150C1F3	7844	24632	52824	7844	24632	-52824
	380C2F1	15689	49264	105648	15689	49264	-105648
	380C2F2	15689	49264	105648	15689	49264	-105648
	380C2F3	15689	49264	105648	15689	49264	-105648
	RTG	0	0	0	4252	13331	-28589
NL1/1a	GW / opgw	2115	7827	14940	2001	22821	-34994
Wind, 10°C	150C1F1	7812	27580	53951	7422	67772	-106087
Permanent loads yg= 0.9	150C1F2	7817	27301	53735	7439	64058	-101014
Wind angle: 45°	150C1F3	7822	26960	53489	7463	59328	-94542
	380C2F1	15625	55160	107902	14843	135545	-212174
	380C2F2	15633	54602	107469	14877	128116	-202027
	380C2F3	15643	53920	106977	14927	118656	-189084
	RTG	0	0	0	4041	33628	-53485
NL1/1b	GW / opgw	2148	7645	16026	2117	9571	-17741
Wind, -20°C	150C1F1	7928	28475	60026	7849	33286	-63543
Permanent loads yg= 0.9	150C1F2	7928	28440	60027	7859	32763	-62998
Wind angle: 45°	150C1F3	7928	28395	60029	7871	32125	-62362
	380C2F1	15855	56949	120052	15699	66572	-127087
	380C2F2	15856	56879	120054	15719	65525	-125995
	380C2F3	15856	56791	120059	15743	64249	-124725
	RTG	0	0	0	4256	17214	-33194
NL1/3	GW / opgw	10531	26494	54919	10414	34472	-59593
Wind, -5°C	150C1F1	15325	46555	96935	15100	60520	-107869
Permanent loads yg= 0.9	150C1F2	15326	46454	96932	15126	59025	-106276
Wind angle: 45°	150C1F3	15327	46328	96933	15158	57190	-104391
	380C2F1	30650	93110	193870	30201	121041	-215738
	380C2F2	30652	92909	193865	30252	118050	-212552
	380C2F3	30653	92657	193867	30315	114381	-208782
	RTG	0	0	0	20978	61877	-113602
NL1/4	GW / opgw	2942	9133	19216	2920	10726	-20215
Construction/maintenance, +5°C	150C1F1	9476	29925	63135	9419	34219	-65539
Permanent loads yg= 0.9	150C1F2	9476	29891	63139	9426	33763	-65138
Wind angle: 45°	150C1F3	9477	29849	63146	9435	33206	-64677
	380C2F1	18952	59850	126270	18837	68438	-131078
	380C2F2	18953	59782	126279	18853	67525	-130276
	380C2F3	18953	59698	126291	18871	66412	-129354
	RTG	0	0	0	5857	19979	-39121
NL1/1a	GW / opgw	2004	21571	33287	2004	21571	-33287
Wind, 10°C	150C1F1	7438	64250	101277	7438	64250	-101277
Permanent loads yg= 0.9	150C1F2	7455	60787	96539	7455	60787	-96539
Wind angle: 90°	150C1F3	7481	56385	90513	7481	56385	-90513
	380C2F1	14875	128501	202553	14875	128501	-202553
	380C2F2	14911	121573	193077	14911	121573	-193077
	380C2F3	14962	112769	181027	14962	112769	-181027
	RTG	0	0	0	4050	31915	-51113

NL1/1b	GW / opgw	2120	9370	17504	2120	9370	-17504
Wind, -20°C	150C1F1	7859	32789	63025	7859	32789	-63025
Permanent loads yg= 0.9	150C1F2	7868	32318	62551	7868	32318	-62551
Wind angle: 90°	150C1F3	7878	31744	62002	7878	31744	-62002
	380C2F1	15718	65578	126050	15718	65578	-126050
	380C2F2	15735	64636	125102	15735	64636	-125102
	380C2F3	15757	63488	124004	15757	63488	-124004
	RTG	0	0	0	4260	16991	-32974
NL1/3	GW / opgw	10426	33685	58906	10426	33685	-58906
Wind, -5°C	150C1F1	15124	59101	106356	15124	59101	-106356
Permanent loads yg= 0.9	150C1F2	15148	57748	104954	15148	57748	-104954
Wind angle: 90°	150C1F3	15177	56089	103303	15177	56089	-103303
	380C2F1	30249	118202	212712	30249	118202	-212712
	380C2F2	30296	115495	209909	30296	115495	-209909
	380C2F3	30354	112178	206607	30354	112178	-206607
	RTG	0	0	0	20992	60969	-112987
NL1/4	GW / opgw	2923	10564	20062	2923	10564	-20062
Construction/maintenance, +5°C	150C1F1	9426	33786	65158	9426	33786	-65158
Permanent loads yg= 0.9	150C1F2	9433	33375	64813	9433	33375	-64813
Wind angle: 90°	150C1F3	9441	32873	64418	9441	32873	-64418
	380C2F1	18852	67572	130316	18852	67572	-130316
	380C2F2	18865	66749	129626	18865	66749	-129626
	380C2F3	18881	65745	128837	18881	65745	-128837
	RTG	0	0	0	5859	19797	-38991
NL1/1a	GW / opgw	2001	22821	34994	2115	7827	-14940
Wind, 10°C	150C1F1	7422	67772	106087	7812	27580	-53951
Permanent loads yg= 0.9	150C1F2	7439	64058	101014	7817	27301	-53735
Wind angle: -45°	150C1F3	7463	59328	94542	7822	26960	-53489
	380C2F1	14843	135545	212174	15625	55160	-107902
	380C2F2	14877	128116	202027	15633	54602	-107469
	380C2F3	14927	118656	189084	15643	53920	-106977
	RTG	0	0	0	4239	14684	-29023
NL1/1b	GW / opgw	2117	9571	17741	2148	7645	-16026
Wind, -20°C	150C1F1	7849	33286	63543	7928	28475	-60026
Permanent loads yg= 0.9	150C1F2	7859	32763	62998	7928	28440	-60027
Wind angle: -45°	150C1F3	7871	32125	62362	7928	28395	-60029
	380C2F1	15699	66572	127087	15855	56949	-120052
	380C2F2	15719	65525	125995	15856	56879	-120054
	380C2F3	15743	64249	124725	15856	56791	-120059
	RTG	0	0	0	4289	15035	-31749
NL1/3	GW / opgw	10414	34472	59593	10531	26494	-54919
Wind, -5°C	150C1F1	15100	60520	107869	15325	46555	-96935
Permanent loads yg= 0.9	150C1F2	15126	59025	106276	15326	46454	-96932
Wind angle: -45°	150C1F3	15158	57190	104391	15327	46328	-96933
	380C2F1	30201	121041	215738	30650	93110	-193870
	380C2F2	30252	118050	212552	30652	92909	-193865
	380C2F3	30315	114381	208782	30653	92657	-193867
	RTG	0	0	0	21097	52504	-110066
NL1/4	GW / opgw	2920	10726	20215	2942	9133	-19216
Construction/maintenance, +5°C	150C1F1	9419	34219	65539	9476	29925	-63135
Permanent loads yg= 0.9	150C1F2	9426	33763	65138	9476	29891	-63139
Wind angle: -45°	150C1F3	9435	33206	64677	9477	29849	-63146
	380C2F1	18837	68438	131078	18952	59850	-126270
	380C2F2	18853	67525	130276	18953	59782	-126279
	380C2F3	18871	66412	129354	18953	59698	-126291
	RTG	0	0	0	5878	18126	-38378

ZWW4HL450+5

Loadcases for tower strength (Special limit state)

		Ahead			Back		
Loadcase according to 50341-3-15	Att. Point	Vertical [N]	Transversal [N]	Longitudinal [N]	Vertical [N]	Transversal [N]	Longitudinal [N]
NL3/1a	GW / opgw	0	0	0	2823	9321	-18524
Wind, 10°C	150C1F1	0	0	0	10409	33452	-67613
Permanent loads yg= 1.2	150C1F2	0	0	0	10412	33276	-67538
Wind angle: 0°	150C1F3	0	0	0	10414	33057	-67456
	380C2F1	0	0	0	20819	66905	-135227
	380C2F2	0	0	0	20823	66551	-135076
	380C2F3	0	0	0	20828	66115	-134911
	RTG	0	0	0	5646	18028	-36702
NL3/1b	GW / opgw	0	0	0	2852	9668	-20282
Wind, -20°C	150C1F1	0	0	0	10517	35772	-75445
Permanent loads yg= 1.2	150C1F2	0	0	0	10517	35730	-75449
Wind angle: 0°	150C1F3	0	0	0	10518	35678	-75455
	380C2F1	0	0	0	21034	71545	-150891
	380C2F2	0	0	0	21035	71461	-150898
	380C2F3	0	0	0	21035	71356	-150910
	RTG	0	0	0	5694	19048	-40247
NL3/3	GW / opgw	0	0	0	4723	14865	-29563
Wind, -5°C	150C1F1	0	0	0	12126	39131	-80372
Permanent loads yg= 1.2	150C1F2	0	0	0	12128	38993	-80336
Wind angle: 0°	150C1F3	0	0	0	12129	38821	-80300
	380C2F1	0	0	0	24253	78262	-160743
	380C2F2	0	0	0	24255	77985	-160673
	380C2F3	0	0	0	24259	77643	-160600
	RTG	0	0	0	9457	28796	-58667
NL3/4	GW / opgw	0	0	0	3479	10540	-22151
Construction/maintenance, +5°C	150C1F1	0	0	0	11729	35812	-75529
Permanent loads yg= 1.2	150C1F2	0	0	0	11729	35771	-75535
Wind angle: 0°	150C1F3	0	0	0	11729	35720	-75543
	380C2F1	0	0	0	23458	71623	-151058
	380C2F2	0	0	0	23458	71542	-151070
	380C2F3	0	0	0	23458	71439	-151087
	RTG	0	0	0	6951	20916	-44251
NL3/1a	GW / opgw	0	0	0	2742	15085	-25102
Wind, 10°C	150C1F1	0	0	0	10184	47987	-82507
Permanent loads yg= 1.2	150C1F2	0	0	0	10207	46350	-80497
Wind angle: 45°	150C1F3	0	0	0	10237	44329	-78071
	380C2F1	0	0	0	20369	95975	-165014
	380C2F2	0	0	0	20414	92699	-160995
	380C2F3	0	0	0	20474	88658	-156142
	RTG	0	0	0	5544	24668	-43215
NL3/1b	GW / opgw	0	0	0	2835	10811	-20956
Wind, -20°C	150C1F1	0	0	0	10479	38680	-76677
Permanent loads yg= 1.2	150C1F2	0	0	0	10484	38359	-76451
Wind angle: 45°	150C1F3	0	0	0	10490	37967	-76196
	380C2F1	0	0	0	20957	77360	-153354
	380C2F2	0	0	0	20968	76719	-152902
	380C2F3	0	0	0	20981	75934	-152392
	RTG	0	0	0	5678	20381	-40729
NL3/3	GW / opgw	0	0	0	4597	23160	-38214
Wind, -5°C	150C1F1	0	0	0	11944	50117	-89948
Permanent loads yg= 1.2	150C1F2	0	0	0	11965	48864	-88552
Wind angle: 45°	150C1F3	0	0	0	11992	47329	-86898
	380C2F1	0	0	0	23888	100234	-179896
	380C2F2	0	0	0	23930	97729	-177104
	380C2F3	0	0	0	23983	94658	-173796
	RTG	0	0	0	9303	38367	-67022
NL3/4	GW / opgw	0	0	0	3467	11568	-22578
Construction/maintenance, +5°C	150C1F1	0	0	0	11699	38554	-76403
Permanent loads yg= 1.2	150C1F2	0	0	0	11703	38257	-76228
Wind angle: 45°	150C1F3	0	0	0	11708	37892	-76032
	380C2F1	0	0	0	23398	77107	-152805
	380C2F2	0	0	0	23406	76513	-152455
	380C2F3	0	0	0	23416	75784	-152064
	RTG	0	0	0	6939	22142	-44504
NL3/1a	GW / opgw	0	0	0	2748	14485	-24322
Wind, 10°C	150C1F1	0	0	0	10206	46433	-80599
Permanent loads yg= 1.2	150C1F2	0	0	0	10228	44944	-78803
Wind angle: 90°	150C1F3	0	0	0	10255	43110	-76644
	380C2F1	0	0	0	20412	92867	-161199
	380C2F2	0	0	0	20455	89888	-157605
	380C2F3	0	0	0	20511	86220	-153287
	RTG	0	0	0	5555	23949	-42351

NL3/1b	GW / opgw	0	0	0	2838	10688	-20849
Wind, -20°C	150C1F1	0	0	0	10484	38376	-76462
Permanent loads yg= 1.2	150C1F2	0	0	0	10488	38086	-76271
Wind angle: 90°	150C1F3	0	0	0	10494	37731	-76055
	380C2F1	0	0	0	20967	76751	-152925
	380C2F2	0	0	0	20977	76172	-152542
	380C2F3	0	0	0	20988	75463	-152111
	RTG	0	0	0	5680	20243	-40640
NL3/3	GW / opgw	0	0	0	4607	22301	-37171
Wind, -5°C	150C1F1	0	0	0	11964	48928	-88622
Permanent loads yg= 1.2	150C1F2	0	0	0	11984	47795	-87393
Wind angle: 90°	150C1F3	0	0	0	12008	46408	-85942
	380C2F1	0	0	0	23928	97857	-177245
	380C2F2	0	0	0	23967	95591	-174786
	380C2F3	0	0	0	24016	92816	-171885
	RTG	0	0	0	9319	37342	-65889
NL3/4	GW / opgw	0	0	0	3469	11461	-22503
Construction/maintenance, +5°C	150C1F1	0	0	0	11703	38272	-76236
Permanent loads yg= 1.2	150C1F2	0	0	0	11707	38003	-76089
Wind angle: 90°	150C1F3	0	0	0	11711	37672	-75926
	380C2F1	0	0	0	23406	76544	-152472
	380C2F2	0	0	0	23413	76006	-152178
	380C2F3	0	0	0	23422	75345	-151852
	RTG	0	0	0	6941	22018	-44447
NL3/1a	GW / opgw	0	0	0	2827	9012	-18368
Wind, 10°C	150C1F1	0	0	0	10418	32662	-67342
Permanent loads yg= 1.2	150C1F2	0	0	0	10419	32560	-67321
Wind angle: -45°	150C1F3	0	0	0	10420	32433	-67301
	380C2F1	0	0	0	20836	65324	-134685
	380C2F2	0	0	0	20838	65119	-134643
	380C2F3	0	0	0	20840	64865	-134602
	RTG	0	0	0	5650	17664	-36599
NL3/1b	GW / opgw	0	0	0	2853	9596	-20284
Wind, -20°C	150C1F1	0	0	0	10518	35580	-75471
Permanent loads yg= 1.2	150C1F2	0	0	0	10518	35554	-75476
Wind angle: -45°	150C1F3	0	0	0	10518	35521	-75483
	380C2F1	0	0	0	21036	71160	-150941
	380C2F2	0	0	0	21036	71108	-150952
	380C2F3	0	0	0	21037	71042	-150966
	RTG	0	0	0	5694	18958	-40261
NL3/3	GW / opgw	0	0	0	4729	14406	-29377
Wind, -5°C	150C1F1	0	0	0	12132	38508	-80259
Permanent loads yg= 1.2	150C1F2	0	0	0	12133	38426	-80254
Wind angle: -45°	150C1F3	0	0	0	12134	38324	-80252
	380C2F1	0	0	0	24264	77016	-160518
	380C2F2	0	0	0	24266	76852	-160508
	380C2F3	0	0	0	24267	76647	-160503
	RTG	0	0	0	9463	28250	-58562
NL3/4	GW / opgw	0	0	0	3480	10471	-22160
Construction/maintenance, +5°C	150C1F1	0	0	0	11730	35623	-75563
Permanent loads yg= 1.2	150C1F2	0	0	0	11730	35598	-75570
Wind angle: -45°	150C1F3	0	0	0	11730	35566	-75578
	380C2F1	0	0	0	23459	71247	-151127
	380C2F2	0	0	0	23459	71196	-151139
	380C2F3	0	0	0	23459	71131	-151156
	RTG	0	0	0	6951	20828	-44272
NL3/1a	GW / opgw	0	0	0	2120	7522	-14666
Wind, 10°C	150C1F1	0	0	0	7824	26822	-53396
Permanent loads yg= 0.9	150C1F2	0	0	0	7827	26621	-53267
Wind angle: 0°	150C1F3	0	0	0	7830	26374	-53123
	380C2F1	0	0	0	15647	53644	-106791
	380C2F2	0	0	0	15653	53241	-106534
	380C2F3	0	0	0	15660	52747	-106246
	RTG	0	0	0	4243	14340	-28794
NL3/1b	GW / opgw	0	0	0	2148	7686	-16032
Wind, -20°C	150C1F1	0	0	0	7927	28583	-60029
Permanent loads yg= 0.9	150C1F2	0	0	0	7927	28539	-60027
Wind angle: 0°	150C1F3	0	0	0	7928	28483	-60026
	380C2F1	0	0	0	15854	57167	-120058
	380C2F2	0	0	0	15855	57078	-120053
	380C2F3	0	0	0	15855	56966	-120052
	RTG	0	0	0	4288	15085	-31748

NL3/3	GW / opgw	0	0	0	4025	13257	-26116
Wind, -5°C	150C1F1	0	0	0	9545	32523	-66201
Permanent loads yg= 0.9	150C1F2	0	0	0	9547	32371	-66137
Wind angle: 0°	150C1F3	0	0	0	9550	32184	-66067
	380C2F1	0	0	0	19091	65045	-132402
	380C2F2	0	0	0	19095	64742	-132273
	380C2F3	0	0	0	19099	64368	-132134
	RTG	0	0	0	8065	25516	-51634
NL3/4	GW / opgw	0	0	0	2780	8747	-18308
Construction/maintenance, +5°C	150C1F1	0	0	0	9152	29172	-61291
Permanent loads yg= 0.9	150C1F2	0	0	0	9152	29130	-61293
Wind angle: 0°	150C1F3	0	0	0	9152	29076	-61297
	380C2F1	0	0	0	18304	58345	-122583
	380C2F2	0	0	0	18304	58259	-122586
	380C2F3	0	0	0	18305	58152	-122594
	RTG	0	0	0	5554	17325	-36551
NL3/1a	GW / opgw	0	0	0	2040	14095	-22981
Wind, 10°C	150C1F1	0	0	0	7585	43658	-73225
Permanent loads yg= 0.9	150C1F2	0	0	0	7606	41809	-70763
Wind angle: 45°	150C1F3	0	0	0	7633	39507	-67734
	380C2F1	0	0	0	15171	87315	-146450
	380C2F2	0	0	0	15211	83618	-141526
	380C2F3	0	0	0	15265	79015	-135468
	RTG	0	0	0	4132	22062	-37629
NL3/1b	GW / opgw	0	0	0	2127	9013	-17100
Wind, -20°C	150C1F1	0	0	0	7875	31907	-62155
Permanent loads yg= 0.9	150C1F2	0	0	0	7882	31529	-61805
Wind angle: 45°	150C1F3	0	0	0	7891	31068	-61403
	380C2F1	0	0	0	15751	63815	-124310
	380C2F2	0	0	0	15765	63059	-123611
	380C2F3	0	0	0	15782	62137	-122806
	RTG	0	0	0	4267	16594	-32608
NL3/3	GW / opgw	0	0	0	3897	22219	-36198
Wind, -5°C	150C1F1	0	0	0	9338	45069	-79125
Permanent loads yg= 0.9	150C1F2	0	0	0	9360	43645	-77361
Wind angle: 45°	150C1F3	0	0	0	9388	41891	-75239
	380C2F1	0	0	0	18676	90137	-158249
	380C2F2	0	0	0	18720	87290	-154723
	380C2F3	0	0	0	18776	83782	-150478
	RTG	0	0	0	7898	35935	-61809
NL3/4	GW / opgw	0	0	0	2765	9882	-18963
Construction/maintenance, +5°C	150C1F1	0	0	0	9113	32205	-62790
Permanent loads yg= 0.9	150C1F2	0	0	0	9119	31867	-62527
Wind angle: 45°	150C1F3	0	0	0	9125	31454	-62228
	380C2F1	0	0	0	18227	64410	-125579
	380C2F2	0	0	0	18237	63735	-125054
	380C2F3	0	0	0	18250	62909	-124455
	RTG	0	0	0	5540	18651	-37018
NL3/1a	GW / opgw	0	0	0	2045	13438	-22076
Wind, 10°C	150C1F1	0	0	0	7604	41904	-70889
Permanent loads yg= 0.9	150C1F2	0	0	0	7624	40210	-68654
Wind angle: 90°	150C1F3	0	0	0	7651	38107	-65918
	380C2F1	0	0	0	15209	83808	-141777
	380C2F2	0	0	0	15248	80421	-137308
	380C2F3	0	0	0	15301	76215	-131837
	RTG	0	0	0	4142	21241	-36544
NL3/1b	GW / opgw	0	0	0	2129	8867	-16944
Wind, -20°C	150C1F1	0	0	0	7882	31549	-61823
Permanent loads yg= 0.9	150C1F2	0	0	0	7888	31208	-61522
Wind angle: 90°	150C1F3	0	0	0	7896	30793	-61177
	380C2F1	0	0	0	15764	63097	-123645
	380C2F2	0	0	0	15777	62416	-123044
	380C2F3	0	0	0	15791	61586	-122354
	RTG	0	0	0	4270	16432	-32469
NL3/3	GW / opgw	0	0	0	3906	21309	-35045
Wind, -5°C	150C1F1	0	0	0	9359	43718	-77451
Permanent loads yg= 0.9	150C1F2	0	0	0	9379	42424	-75878
Wind angle: 90°	150C1F3	0	0	0	9405	40835	-73994
	380C2F1	0	0	0	18717	87435	-154901
	380C2F2	0	0	0	18758	84849	-151756
	380C2F3	0	0	0	18811	81670	-147987
	RTG	0	0	0	7915	34825	-60492

NL3/4	GW / opgw	0	0	0	2767	9761	-18859
Construction/maintenance, +5°C	150C1F1	0	0	0	9118	31885	-62540
Permanent loads yg= 0.9	150C1F2	0	0	0	9123	31580	-62316
Wind angle: 90°	150C1F3	0	0	0	9129	31207	-62061
	380C2F1	0	0	0	18237	63769	-125080
	380C2F2	0	0	0	18246	63159	-124631
	380C2F3	0	0	0	18257	62413	-124123
	RTG	0	0	0	5542	18514	-36932
NL3/1a	GW / opgw	0	0	0	2125	7168	-14412
Wind, 10°C	150C1F1	0	0	0	7835	25931	-52908
Permanent loads yg= 0.9	150C1F2	0	0	0	7837	25818	-52864
Wind angle: -45°	150C1F3	0	0	0	7838	25678	-52816
	380C2F1	0	0	0	15671	51862	-105817
	380C2F2	0	0	0	15673	51636	-105728
	380C2F3	0	0	0	15676	51356	-105633
	RTG	0	0	0	4248	13934	-28600
NL3/1b	GW / opgw	0	0	0	2149	7610	-16024
Wind, -20°C	150C1F1	0	0	0	7928	28380	-60031
Permanent loads yg= 0.9	150C1F2	0	0	0	7928	28353	-60033
Wind angle: -45°	150C1F3	0	0	0	7929	28319	-60038
	380C2F1	0	0	0	15857	56760	-120061
	380C2F2	0	0	0	15857	56706	-120067
	380C2F3	0	0	0	15857	56637	-120075
	RTG	0	0	0	4289	14991	-31753
NL3/3	GW / opgw	0	0	0	4032	12765	-25858
Wind, -5°C	150C1F1	0	0	0	9553	31845	-65971
Permanent loads yg= 0.9	150C1F2	0	0	0	9554	31757	-65953
Wind angle: -45°	150C1F3	0	0	0	9555	31648	-65936
	380C2F1	0	0	0	19106	63690	-131942
	380C2F2	0	0	0	19108	63515	-131907
	380C2F3	0	0	0	19110	63296	-131873
	RTG	0	0	0	8072	24939	-51462
NL3/4	GW / opgw	0	0	0	2780	8676	-18311
Construction/maintenance, +5°C	150C1F1	0	0	0	9153	28977	-61309
Permanent loads yg= 0.9	150C1F2	0	0	0	9153	28950	-61314
Wind angle: -45°	150C1F3	0	0	0	9153	28917	-61320
	380C2F1	0	0	0	18306	57953	-122619
	380C2F2	0	0	0	18306	57901	-122628
	380C2F3	0	0	0	18306	57834	-122641
	RTG	0	0	0	5554	17235	-36566

ZWW4HL450+5

Loadcases for tower strength (Special limit state)

		Ahead			Back		
Loadcase according to 50341-3-15	Att. Point	Vertical [N]	Transversal [N]	Longitudinal [N]	Vertical [N]	Transversal [N]	Longitudinal [N]
NL3/1a	GW / opgw	2823	9321	18524	0	0	0
Wind, 10°C	150C1F1	10409	33452	67613	0	0	0
Permanent loads yg= 1.2	150C1F2	10412	33276	67538	0	0	0
Wind angle: 0°	150C1F3	10414	33057	67456	0	0	0
	380C2F1	20819	66905	135227	0	0	0
	380C2F2	20823	66551	135076	0	0	0
	380C2F3	20828	66115	134911	0	0	0
	RTG	0	0	0	0	0	0
NL3/1b	GW / opgw	2852	9668	20282	0	0	0
Wind, -20°C	150C1F1	10517	35772	75445	0	0	0
Permanent loads yg= 1.2	150C1F2	10517	35730	75449	0	0	0
Wind angle: 0°	150C1F3	10518	35678	75455	0	0	0
	380C2F1	21034	71545	150891	0	0	0
	380C2F2	21035	71461	150898	0	0	0
	380C2F3	21035	71356	150910	0	0	0
	RTG	0	0	0	0	0	0
NL3/3	GW / opgw	4723	14865	29563	0	0	0
Wind, -5°C	150C1F1	12126	39131	80372	0	0	0
Permanent loads yg= 1.2	150C1F2	12128	38993	80336	0	0	0
Wind angle: 0°	150C1F3	12129	38821	80300	0	0	0
	380C2F1	24253	78262	160743	0	0	0
	380C2F2	24255	77985	160673	0	0	0
	380C2F3	24259	77643	160600	0	0	0
	RTG	0	0	0	0	0	0
NL3/4	GW / opgw	3479	10540	22151	0	0	0
Construction/maintenance, +5°C	150C1F1	11729	35812	75529	0	0	0
Permanent loads yg= 1.2	150C1F2	11729	35771	75535	0	0	0
Wind angle: 0°	150C1F3	11729	35720	75543	0	0	0
	380C2F1	23458	71623	151058	0	0	0
	380C2F2	23458	71542	151070	0	0	0
	380C2F3	23458	71439	151087	0	0	0
	RTG	0	0	0	0	0	0
NL3/1a	GW / opgw	2827	9012	18368	0	0	0
Wind, 10°C	150C1F1	10418	32662	67342	0	0	0
Permanent loads yg= 1.2	150C1F2	10419	32560	67321	0	0	0
Wind angle: 45°	150C1F3	10420	32433	67301	0	0	0
	380C2F1	20836	65324	134685	0	0	0
	380C2F2	20838	65119	134643	0	0	0
	380C2F3	20840	64865	134602	0	0	0
	RTG	0	0	0	0	0	0
NL3/1b	GW / opgw	2853	9596	20284	0	0	0
Wind, -20°C	150C1F1	10518	35580	75471	0	0	0
Permanent loads yg= 1.2	150C1F2	10518	35554	75476	0	0	0
Wind angle: 45°	150C1F3	10518	35521	75483	0	0	0
	380C2F1	21036	71160	150941	0	0	0
	380C2F2	21036	71108	150952	0	0	0
	380C2F3	21037	71042	150966	0	0	0
	RTG	0	0	0	0	0	0
NL3/3	GW / opgw	4729	14406	29377	0	0	0
Wind, -5°C	150C1F1	12132	38508	80259	0	0	0
Permanent loads yg= 1.2	150C1F2	12133	38426	80254	0	0	0
Wind angle: 45°	150C1F3	12134	38324	80252	0	0	0
	380C2F1	24264	77016	160518	0	0	0
	380C2F2	24266	76852	160508	0	0	0
	380C2F3	24267	76647	160503	0	0	0
	RTG	0	0	0	0	0	0
NL3/4	GW / opgw	3480	10471	22160	0	0	0
Construction/maintenance, +5°C	150C1F1	11730	35623	75563	0	0	0
Permanent loads yg= 1.2	150C1F2	11730	35598	75570	0	0	0
Wind angle: 45°	150C1F3	11730	35566	75578	0	0	0
	380C2F1	23459	71247	151127	0	0	0
	380C2F2	23459	71196	151139	0	0	0
	380C2F3	23459	71131	151156	0	0	0
	RTG	0	0	0	0	0	0
NL3/1a	GW / opgw	2748	14485	24322	0	0	0
Wind, 10°C	150C1F1	10206	46433	80599	0	0	0
Permanent loads yg= 1.2	150C1F2	10228	44944	78803	0	0	0
Wind angle: 90°	150C1F3	10255	43110	76644	0	0	0
	380C2F1	20412	92867	161199	0	0	0
	380C2F2	20455	89888	157605	0	0	0
	380C2F3	20511	86220	153287	0	0	0
	RTG	0	0	0	0	0	0

NL3/1b	GW / opgw	2838	10688	20849	0	0	0
Wind, -20°C	150C1F1	10484	38376	76462	0	0	0
Permanent loads yg= 1.2	150C1F2	10488	38086	76271	0	0	0
Wind angle: 90°	150C1F3	10494	37731	76055	0	0	0
	380C2F1	20967	76751	152925	0	0	0
	380C2F2	20977	76172	152542	0	0	0
	380C2F3	20988	75463	152111	0	0	0
	RTG	0	0	0	0	0	0
NL3/3	GW / opgw	4607	22301	37171	0	0	0
Wind, -5°C	150C1F1	11964	48928	88622	0	0	0
Permanent loads yg= 1.2	150C1F2	11984	47795	87393	0	0	0
Wind angle: 90°	150C1F3	12008	46408	85942	0	0	0
	380C2F1	23928	97857	177245	0	0	0
	380C2F2	23967	95591	174786	0	0	0
	380C2F3	24016	92816	171885	0	0	0
	RTG	0	0	0	0	0	0
NL3/4	GW / opgw	3469	11461	22503	0	0	0
Construction/maintenance, +5°C	150C1F1	11703	38272	76236	0	0	0
Permanent loads yg= 1.2	150C1F2	11707	38003	76089	0	0	0
Wind angle: 90°	150C1F3	11711	37672	75926	0	0	0
	380C2F1	23406	76544	152472	0	0	0
	380C2F2	23413	76006	152178	0	0	0
	380C2F3	23422	75345	151852	0	0	0
	RTG	0	0	0	0	0	0
NL3/1a	GW / opgw	2742	15085	25102	0	0	0
Wind, 10°C	150C1F1	10184	47987	82507	0	0	0
Permanent loads yg= 1.2	150C1F2	10207	46350	80497	0	0	0
Wind angle: -45°	150C1F3	10237	44329	78071	0	0	0
	380C2F1	20369	95975	165014	0	0	0
	380C2F2	20414	92699	160995	0	0	0
	380C2F3	20474	88658	156142	0	0	0
	RTG	0	0	0	0	0	0
NL3/1b	GW / opgw	2835	10811	20956	0	0	0
Wind, -20°C	150C1F1	10479	38680	76677	0	0	0
Permanent loads yg= 1.2	150C1F2	10484	38359	76451	0	0	0
Wind angle: -45°	150C1F3	10490	37967	76196	0	0	0
	380C2F1	20957	77360	153354	0	0	0
	380C2F2	20968	76719	152902	0	0	0
	380C2F3	20981	75934	152392	0	0	0
	RTG	0	0	0	0	0	0
NL3/3	GW / opgw	4597	23160	38214	0	0	0
Wind, -5°C	150C1F1	11944	50117	89948	0	0	0
Permanent loads yg= 1.2	150C1F2	11965	48864	88552	0	0	0
Wind angle: -45°	150C1F3	11992	47329	86898	0	0	0
	380C2F1	23888	100234	179896	0	0	0
	380C2F2	23930	97729	177104	0	0	0
	380C2F3	23983	94658	173796	0	0	0
	RTG	0	0	0	0	0	0
NL3/4	GW / opgw	3467	11568	22578	0	0	0
Construction/maintenance, +5°C	150C1F1	11699	38554	76403	0	0	0
Permanent loads yg= 1.2	150C1F2	11703	38257	76228	0	0	0
Wind angle: -45°	150C1F3	11708	37892	76032	0	0	0
	380C2F1	23398	77107	152805	0	0	0
	380C2F2	23406	76513	152455	0	0	0
	380C2F3	23416	75784	152064	0	0	0
	RTG	0	0	0	0	0	0
NL3/1a	GW / opgw	2120	7522	14666	0	0	0
Wind, 10°C	150C1F1	7824	26822	53396	0	0	0
Permanent loads yg= 0.9	150C1F2	7827	26621	53267	0	0	0
Wind angle: 0°	150C1F3	7830	26374	53123	0	0	0
	380C2F1	15647	53644	106791	0	0	0
	380C2F2	15653	53241	106534	0	0	0
	380C2F3	15660	52747	106246	0	0	0
	RTG	0	0	0	0	0	0
NL3/1b	GW / opgw	2148	7686	16032	0	0	0
Wind, -20°C	150C1F1	7927	28583	60029	0	0	0
Permanent loads yg= 0.9	150C1F2	7927	28539	60027	0	0	0
Wind angle: 0°	150C1F3	7928	28483	60026	0	0	0
	380C2F1	15854	57167	120058	0	0	0
	380C2F2	15855	57078	120053	0	0	0
	380C2F3	15855	56966	120052	0	0	0
	RTG	0	0	0	0	0	0

NL3/3	GW / opgw	4025	13257	26116	0	0	0
Wind, -5°C	150C1F1	9545	32523	66201	0	0	0
Permanent loads yg= 0.9	150C1F2	9547	32371	66137	0	0	0
Wind angle: 0°	150C1F3	9550	32184	66067	0	0	0
	380C2F1	19091	65045	132402	0	0	0
	380C2F2	19095	64742	132273	0	0	0
	380C2F3	19099	64368	132134	0	0	0
	RTG	0	0	0	0	0	0
NL3/4	GW / opgw	2780	8747	18308	0	0	0
Construction/maintenance, +5°C	150C1F1	9152	29172	61291	0	0	0
Permanent loads yg= 0.9	150C1F2	9152	29130	61293	0	0	0
Wind angle: 0°	150C1F3	9152	29076	61297	0	0	0
	380C2F1	18304	58345	122583	0	0	0
	380C2F2	18304	58259	122586	0	0	0
	380C2F3	18305	58152	122594	0	0	0
	RTG	0	0	0	0	0	0
NL3/1a	GW / opgw	2125	7168	14412	0	0	0
Wind, 10°C	150C1F1	7835	25931	52908	0	0	0
Permanent loads yg= 0.9	150C1F2	7837	25818	52864	0	0	0
Wind angle: 45°	150C1F3	7838	25678	52816	0	0	0
	380C2F1	15671	51862	105817	0	0	0
	380C2F2	15673	51636	105728	0	0	0
	380C2F3	15676	51356	105633	0	0	0
	RTG	0	0	0	0	0	0
NL3/1b	GW / opgw	2149	7610	16024	0	0	0
Wind, -20°C	150C1F1	7928	28380	60031	0	0	0
Permanent loads yg= 0.9	150C1F2	7928	28353	60033	0	0	0
Wind angle: 45°	150C1F3	7929	28319	60038	0	0	0
	380C2F1	15857	56760	120061	0	0	0
	380C2F2	15857	56706	120067	0	0	0
	380C2F3	15857	56637	120075	0	0	0
	RTG	0	0	0	0	0	0
NL3/3	GW / opgw	4032	12765	25858	0	0	0
Wind, -5°C	150C1F1	9553	31845	65971	0	0	0
Permanent loads yg= 0.9	150C1F2	9554	31757	65953	0	0	0
Wind angle: 45°	150C1F3	9555	31648	65936	0	0	0
	380C2F1	19106	63690	131942	0	0	0
	380C2F2	19108	63515	131907	0	0	0
	380C2F3	19110	63296	131873	0	0	0
	RTG	0	0	0	0	0	0
NL3/4	GW / opgw	2780	8676	18311	0	0	0
Construction/maintenance, +5°C	150C1F1	9153	28977	61309	0	0	0
Permanent loads yg= 0.9	150C1F2	9153	28950	61314	0	0	0
Wind angle: 45°	150C1F3	9153	28917	61320	0	0	0
	380C2F1	18306	57953	122619	0	0	0
	380C2F2	18306	57901	122628	0	0	0
	380C2F3	18306	57834	122641	0	0	0
	RTG	0	0	0	0	0	0
NL3/1a	GW / opgw	2045	13438	22076	0	0	0
Wind, 10°C	150C1F1	7604	41904	70889	0	0	0
Permanent loads yg= 0.9	150C1F2	7624	40210	68654	0	0	0
Wind angle: 90°	150C1F3	7651	38107	65918	0	0	0
	380C2F1	15209	83808	141777	0	0	0
	380C2F2	15248	80421	137308	0	0	0
	380C2F3	15301	76215	131837	0	0	0
	RTG	0	0	0	0	0	0
NL3/1b	GW / opgw	2129	8867	16944	0	0	0
Wind, -20°C	150C1F1	7882	31549	61823	0	0	0
Permanent loads yg= 0.9	150C1F2	7888	31208	61522	0	0	0
Wind angle: 90°	150C1F3	7896	30793	61177	0	0	0
	380C2F1	15764	63097	123645	0	0	0
	380C2F2	15777	62416	123044	0	0	0
	380C2F3	15791	61586	122354	0	0	0
	RTG	0	0	0	0	0	0
NL3/3	GW / opgw	3906	21309	35045	0	0	0
Wind, -5°C	150C1F1	9359	43718	77451	0	0	0
Permanent loads yg= 0.9	150C1F2	9379	42424	75878	0	0	0
Wind angle: 90°	150C1F3	9405	40835	73994	0	0	0
	380C2F1	18717	87435	154901	0	0	0
	380C2F2	18758	84849	151756	0	0	0
	380C2F3	18811	81670	147987	0	0	0
	RTG	0	0	0	0	0	0

NL3/4	GW / opgw	2767	9761	18859	0	0	0
Construction/maintenance, +5°C	150C1F1	9118	31885	62540	0	0	0
Permanent loads yg= 0.9	150C1F2	9123	31580	62316	0	0	0
Wind angle: 90°	150C1F3	9129	31207	62061	0	0	0
	380C2F1	18237	63769	125080	0	0	0
	380C2F2	18246	63159	124631	0	0	0
	380C2F3	18257	62413	124123	0	0	0
	RTG	0	0	0	0	0	0
NL3/1a	GW / opgw	2040	14095	22981	0	0	0
Wind, 10°C	150C1F1	7585	43658	73225	0	0	0
Permanent loads yg= 0.9	150C1F2	7606	41809	70763	0	0	0
Wind angle: -45°	150C1F3	7633	39507	67734	0	0	0
	380C2F1	15171	87315	146450	0	0	0
	380C2F2	15211	83618	141526	0	0	0
	380C2F3	15265	79015	135468	0	0	0
	RTG	0	0	0	0	0	0
NL3/1b	GW / opgw	2127	9013	17100	0	0	0
Wind, -20°C	150C1F1	7875	31907	62155	0	0	0
Permanent loads yg= 0.9	150C1F2	7882	31529	61805	0	0	0
Wind angle: -45°	150C1F3	7891	31068	61403	0	0	0
	380C2F1	15751	63815	124310	0	0	0
	380C2F2	15765	63059	123611	0	0	0
	380C2F3	15782	62137	122806	0	0	0
	RTG	0	0	0	0	0	0
NL3/3	GW / opgw	3897	22219	36198	0	0	0
Wind, -5°C	150C1F1	9338	45069	79125	0	0	0
Permanent loads yg= 0.9	150C1F2	9360	43645	77361	0	0	0
Wind angle: -45°	150C1F3	9388	41891	75239	0	0	0
	380C2F1	18676	90137	158249	0	0	0
	380C2F2	18720	87290	154723	0	0	0
	380C2F3	18776	83782	150478	0	0	0
	RTG	0	0	0	0	0	0
NL3/4	GW / opgw	2765	9882	18963	0	0	0
Construction/maintenance, +5°C	150C1F1	9113	32205	62790	0	0	0
Permanent loads yg= 0.9	150C1F2	9119	31867	62527	0	0	0
Wind angle: -45°	150C1F3	9125	31454	62228	0	0	0
	380C2F1	18227	64410	125579	0	0	0
	380C2F2	18237	63735	125054	0	0	0
	380C2F3	18250	62909	124455	0	0	0
	RTG	0	0	0	0	0	0

ZWW4HL450+5

Loadcases for tower strength (Special limit state)

		Ahead			Back		
Loadcase according to 50341-3-15	Att. Point	Vertical [N]	Transversal [N]	Longitudinal [N]	Vertical [N]	Transversal [N]	Longitudinal [N]
NL3/1a	GW / opgw	2823	9321	18524	2823	9321	-18524
Wind, 10°C	150C1F1	10409	33452	67613	10409	33452	-67613
Permanent loads yg= 1.2	150C1F2	10412	33276	67538	10412	33276	-67538
Wind angle: 0°	150C1F3	10414	33057	67456	10414	33057	-67456
	380C2F1	0	0	0	0	0	0
	380C2F2	0	0	0	0	0	0
	380C2F3	0	0	0	0	0	0
	RTG	0	0	0	0	0	0
NL3/1b	GW / opgw	2852	9668	20282	2852	9668	-20282
Wind, -20°C	150C1F1	10517	35772	75445	10517	35772	-75445
Permanent loads yg= 1.2	150C1F2	10517	35730	75449	10517	35730	-75449
Wind angle: 0°	150C1F3	10518	35678	75455	10518	35678	-75455
	380C2F1	0	0	0	0	0	0
	380C2F2	0	0	0	0	0	0
	380C2F3	0	0	0	0	0	0
	RTG	0	0	0	0	0	0
NL3/3	GW / opgw	4723	14865	29563	4723	14865	-29563
Wind, -5°C	150C1F1	12126	39131	80372	12126	39131	-80372
Permanent loads yg= 1.2	150C1F2	12128	38993	80336	12128	38993	-80336
Wind angle: 0°	150C1F3	12129	38821	80300	12129	38821	-80300
	380C2F1	0	0	0	0	0	0
	380C2F2	0	0	0	0	0	0
	380C2F3	0	0	0	0	0	0
	RTG	0	0	0	0	0	0
NL3/4	GW / opgw	3479	10540	22151	3479	10540	-22151
Construction/maintenance, +5°C	150C1F1	11729	35812	75529	11729	35812	-75529
Permanent loads yg= 1.2	150C1F2	11729	35771	75535	11729	35771	-75535
Wind angle: 0°	150C1F3	11729	35720	75543	11729	35720	-75543
	380C2F1	0	0	0	0	0	0
	380C2F2	0	0	0	0	0	0
	380C2F3	0	0	0	0	0	0
	RTG	0	0	0	0	0	0
NL3/1a	GW / opgw	2827	9012	18368	2742	15085	-25102
Wind, 10°C	150C1F1	10418	32662	67342	10184	47987	-82507
Permanent loads yg= 1.2	150C1F2	10419	32560	67321	10207	46350	-80497
Wind angle: 45°	150C1F3	10420	32433	67301	10237	44329	-78071
	380C2F1	0	0	0	0	0	0
	380C2F2	0	0	0	0	0	0
	380C2F3	0	0	0	0	0	0
	RTG	0	0	0	0	0	0
NL3/1b	GW / opgw	2853	9596	20284	2835	10811	-20956
Wind, -20°C	150C1F1	10518	35580	75471	10479	38680	-76677
Permanent loads yg= 1.2	150C1F2	10518	35554	75476	10484	38359	-76451
Wind angle: 45°	150C1F3	10518	35521	75483	10490	37967	-76196
	380C2F1	0	0	0	0	0	0
	380C2F2	0	0	0	0	0	0
	380C2F3	0	0	0	0	0	0
	RTG	0	0	0	0	0	0
NL3/3	GW / opgw	4729	14406	29377	4597	23160	-38214
Wind, -5°C	150C1F1	12132	38508	80259	11944	50117	-89948
Permanent loads yg= 1.2	150C1F2	12133	38426	80254	11965	48864	-88552
Wind angle: 45°	150C1F3	12134	38324	80252	11992	47329	-86898
	380C2F1	0	0	0	0	0	0
	380C2F2	0	0	0	0	0	0
	380C2F3	0	0	0	0	0	0
	RTG	0	0	0	0	0	0
NL3/4	GW / opgw	3480	10471	22160	3467	11568	-22578
Construction/maintenance, +5°C	150C1F1	11730	35623	75563	11699	38554	-76403
Permanent loads yg= 1.2	150C1F2	11730	35598	75570	11703	38257	-76228
Wind angle: 45°	150C1F3	11730	35566	75578	11708	37892	-76032
	380C2F1	0	0	0	0	0	0
	380C2F2	0	0	0	0	0	0
	380C2F3	0	0	0	0	0	0
	RTG	0	0	0	0	0	0
NL3/1a	GW / opgw	2748	14485	24322	2748	14485	-24322
Wind, 10°C	150C1F1	10206	46433	80599	10206	46433	-80599
Permanent loads yg= 1.2	150C1F2	10228	44944	78803	10228	44944	-78803
Wind angle: 90°	150C1F3	10255	43110	76644	10255	43110	-76644
	380C2F1	0	0	0	0	0	0
	380C2F2	0	0	0	0	0	0
	380C2F3	0	0	0	0	0	0
	RTG	0	0	0	0	0	0

NL3/1b	GW / opgw	2838	10688	20849	2838	10688	-20849
Wind, -20°C	150C1F1	10484	38376	76462	10484	38376	-76462
Permanent loads yg= 1.2	150C1F2	10488	38086	76271	10488	38086	-76271
Wind angle: 90°	150C1F3	10494	37731	76055	10494	37731	-76055
	380C2F1	0	0	0	0	0	0
	380C2F2	0	0	0	0	0	0
	380C2F3	0	0	0	0	0	0
	RTG	0	0	0	0	0	0
NL3/3	GW / opgw	4607	22301	37171	4607	22301	-37171
Wind, -5°C	150C1F1	11964	48928	88622	11964	48928	-88622
Permanent loads yg= 1.2	150C1F2	11984	47795	87393	11984	47795	-87393
Wind angle: 90°	150C1F3	12008	46408	85942	12008	46408	-85942
	380C2F1	0	0	0	0	0	0
	380C2F2	0	0	0	0	0	0
	380C2F3	0	0	0	0	0	0
	RTG	0	0	0	0	0	0
NL3/4	GW / opgw	3469	11461	22503	3469	11461	-22503
Construction/maintenance, +5°C	150C1F1	11703	38272	76236	11703	38272	-76236
Permanent loads yg= 1.2	150C1F2	11707	38003	76089	11707	38003	-76089
Wind angle: 90°	150C1F3	11711	37672	75926	11711	37672	-75926
	380C2F1	0	0	0	0	0	0
	380C2F2	0	0	0	0	0	0
	380C2F3	0	0	0	0	0	0
	RTG	0	0	0	0	0	0
NL3/1a	GW / opgw	2742	15085	25102	2827	9012	-18368
Wind, 10°C	150C1F1	10184	47987	82507	10418	32662	-67342
Permanent loads yg= 1.2	150C1F2	10207	46350	80497	10419	32560	-67321
Wind angle: -45°	150C1F3	10237	44329	78071	10420	32433	-67301
	380C2F1	0	0	0	0	0	0
	380C2F2	0	0	0	0	0	0
	380C2F3	0	0	0	0	0	0
	RTG	0	0	0	0	0	0
NL3/1b	GW / opgw	2835	10811	20956	2853	9596	-20284
Wind, -20°C	150C1F1	10479	38680	76677	10518	35580	-75471
Permanent loads yg= 1.2	150C1F2	10484	38359	76451	10518	35554	-75476
Wind angle: -45°	150C1F3	10490	37967	76196	10518	35521	-75483
	380C2F1	0	0	0	0	0	0
	380C2F2	0	0	0	0	0	0
	380C2F3	0	0	0	0	0	0
	RTG	0	0	0	0	0	0
NL3/3	GW / opgw	4597	23160	38214	4729	14406	-29377
Wind, -5°C	150C1F1	11944	50117	89948	12132	38508	-80259
Permanent loads yg= 1.2	150C1F2	11965	48864	88552	12133	38426	-80254
Wind angle: -45°	150C1F3	11992	47329	86898	12134	38324	-80252
	380C2F1	0	0	0	0	0	0
	380C2F2	0	0	0	0	0	0
	380C2F3	0	0	0	0	0	0
	RTG	0	0	0	0	0	0
NL3/4	GW / opgw	3467	11568	22578	3480	10471	-22160
Construction/maintenance, +5°C	150C1F1	11699	38554	76403	11730	35623	-75563
Permanent loads yg= 1.2	150C1F2	11703	38257	76228	11730	35598	-75570
Wind angle: -45°	150C1F3	11708	37892	76032	11730	35566	-75578
	380C2F1	0	0	0	0	0	0
	380C2F2	0	0	0	0	0	0
	380C2F3	0	0	0	0	0	0
	RTG	0	0	0	0	0	0
NL3/1a	GW / opgw	2120	7522	14666	2120	7522	-14666
Wind, 10°C	150C1F1	7824	26822	53396	7824	26822	-53396
Permanent loads yg= 0.9	150C1F2	7827	26621	53267	7827	26621	-53267
Wind angle: 0°	150C1F3	7830	26374	53123	7830	26374	-53123
	380C2F1	0	0	0	0	0	0
	380C2F2	0	0	0	0	0	0
	380C2F3	0	0	0	0	0	0
	RTG	0	0	0	0	0	0
NL3/1b	GW / opgw	2148	7686	16032	2148	7686	-16032
Wind, -20°C	150C1F1	7927	28583	60029	7927	28583	-60029
Permanent loads yg= 0.9	150C1F2	7927	28539	60027	7927	28539	-60027
Wind angle: 0°	150C1F3	7928	28483	60026	7928	28483	-60026
	380C2F1	0	0	0	0	0	0
	380C2F2	0	0	0	0	0	0
	380C2F3	0	0	0	0	0	0
	RTG	0	0	0	0	0	0

NL3/3	GW / opgw	4025	13257	26116	4025	13257	-26116
Wind, -5°C	150C1F1	9545	32523	66201	9545	32523	-66201
Permanent loads yg= 0.9	150C1F2	9547	32371	66137	9547	32371	-66137
Wind angle: 0°	150C1F3	9550	32184	66067	9550	32184	-66067
	380C2F1	0	0	0	0	0	0
	380C2F2	0	0	0	0	0	0
	380C2F3	0	0	0	0	0	0
	RTG	0	0	0	0	0	0
NL3/4	GW / opgw	2780	8747	18308	2780	8747	-18308
Construction/maintenance, +5°C	150C1F1	9152	29172	61291	9152	29172	-61291
Permanent loads yg= 0.9	150C1F2	9152	29130	61293	9152	29130	-61293
Wind angle: 0°	150C1F3	9152	29076	61297	9152	29076	-61297
	380C2F1	0	0	0	0	0	0
	380C2F2	0	0	0	0	0	0
	380C2F3	0	0	0	0	0	0
	RTG	0	0	0	0	0	0
NL3/1a	GW / opgw	2125	7168	14412	2040	14095	-22981
Wind, 10°C	150C1F1	7835	25931	52908	7585	43658	-73225
Permanent loads yg= 0.9	150C1F2	7837	25818	52864	7606	41809	-70763
Wind angle: 45°	150C1F3	7838	25678	52816	7633	39507	-67734
	380C2F1	0	0	0	0	0	0
	380C2F2	0	0	0	0	0	0
	380C2F3	0	0	0	0	0	0
	RTG	0	0	0	0	0	0
NL3/1b	GW / opgw	2149	7610	16024	2127	9013	-17100
Wind, -20°C	150C1F1	7928	28380	60031	7875	31907	-62155
Permanent loads yg= 0.9	150C1F2	7928	28353	60033	7882	31529	-61805
Wind angle: 45°	150C1F3	7929	28319	60038	7891	31068	-61403
	380C2F1	0	0	0	0	0	0
	380C2F2	0	0	0	0	0	0
	380C2F3	0	0	0	0	0	0
	RTG	0	0	0	0	0	0
NL3/3	GW / opgw	4032	12765	25858	3897	22219	-36198
Wind, -5°C	150C1F1	9553	31845	65971	9338	45069	-79125
Permanent loads yg= 0.9	150C1F2	9554	31757	65953	9360	43645	-77361
Wind angle: 45°	150C1F3	9555	31648	65936	9388	41891	-75239
	380C2F1	0	0	0	0	0	0
	380C2F2	0	0	0	0	0	0
	380C2F3	0	0	0	0	0	0
	RTG	0	0	0	0	0	0
NL3/4	GW / opgw	2780	8676	18311	2765	9882	-18963
Construction/maintenance, +5°C	150C1F1	9153	28977	61309	9113	32205	-62790
Permanent loads yg= 0.9	150C1F2	9153	28950	61314	9119	31867	-62527
Wind angle: 45°	150C1F3	9153	28917	61320	9125	31454	-62228
	380C2F1	0	0	0	0	0	0
	380C2F2	0	0	0	0	0	0
	380C2F3	0	0	0	0	0	0
	RTG	0	0	0	0	0	0
NL3/1a	GW / opgw	2045	13438	22076	2045	13438	-22076
Wind, 10°C	150C1F1	7604	41904	70889	7604	41904	-70889
Permanent loads yg= 0.9	150C1F2	7624	40210	68654	7624	40210	-68654
Wind angle: 90°	150C1F3	7651	38107	65918	7651	38107	-65918
	380C2F1	0	0	0	0	0	0
	380C2F2	0	0	0	0	0	0
	380C2F3	0	0	0	0	0	0
	RTG	0	0	0	0	0	0
NL3/1b	GW / opgw	2129	8867	16944	2129	8867	-16944
Wind, -20°C	150C1F1	7882	31549	61823	7882	31549	-61823
Permanent loads yg= 0.9	150C1F2	7888	31208	61522	7888	31208	-61522
Wind angle: 90°	150C1F3	7896	30793	61177	7896	30793	-61177
	380C2F1	0	0	0	0	0	0
	380C2F2	0	0	0	0	0	0
	380C2F3	0	0	0	0	0	0
	RTG	0	0	0	0	0	0
NL3/3	GW / opgw	3906	21309	35045	3906	21309	-35045
Wind, -5°C	150C1F1	9359	43718	77451	9359	43718	-77451
Permanent loads yg= 0.9	150C1F2	9379	42424	75878	9379	42424	-75878
Wind angle: 90°	150C1F3	9405	40835	73994	9405	40835	-73994
	380C2F1	0	0	0	0	0	0
	380C2F2	0	0	0	0	0	0
	380C2F3	0	0	0	0	0	0
	RTG	0	0	0	0	0	0

NL3/4	GW / opgw	2767	9761	18859	2767	9761	-18859
Construction/maintenance, +5°C	150C1F1	9118	31885	62540	9118	31885	-62540
Permanent loads yg= 0.9	150C1F2	9123	31580	62316	9123	31580	-62316
Wind angle: 90°	150C1F3	9129	31207	62061	9129	31207	-62061
	380C2F1	0	0	0	0	0	0
	380C2F2	0	0	0	0	0	0
	380C2F3	0	0	0	0	0	0
	RTG	0	0	0	0	0	0
NL3/1a	GW / opgw	2040	14095	22981	2125	7168	-14412
Wind, 10°C	150C1F1	7585	43658	73225	7835	25931	-52908
Permanent loads yg= 0.9	150C1F2	7606	41809	70763	7837	25818	-52864
Wind angle: -45°	150C1F3	7633	39507	67734	7838	25678	-52816
	380C2F1	0	0	0	0	0	0
	380C2F2	0	0	0	0	0	0
	380C2F3	0	0	0	0	0	0
	RTG	0	0	0	0	0	0
NL3/1b	GW / opgw	2127	9013	17100	2149	7610	-16024
Wind, -20°C	150C1F1	7875	31907	62155	7928	28380	-60031
Permanent loads yg= 0.9	150C1F2	7882	31529	61805	7928	28353	-60033
Wind angle: -45°	150C1F3	7891	31068	61403	7929	28319	-60038
	380C2F1	0	0	0	0	0	0
	380C2F2	0	0	0	0	0	0
	380C2F3	0	0	0	0	0	0
	RTG	0	0	0	0	0	0
NL3/3	GW / opgw	3897	22219	36198	4032	12765	-25858
Wind, -5°C	150C1F1	9338	45069	79125	9553	31845	-65971
Permanent loads yg= 0.9	150C1F2	9360	43645	77361	9554	31757	-65953
Wind angle: -45°	150C1F3	9388	41891	75239	9555	31648	-65936
	380C2F1	0	0	0	0	0	0
	380C2F2	0	0	0	0	0	0
	380C2F3	0	0	0	0	0	0
	RTG	0	0	0	0	0	0
NL3/4	GW / opgw	2765	9882	18963	2780	8676	-18311
Construction/maintenance, +5°C	150C1F1	9113	32205	62790	9153	28977	-61309
Permanent loads yg= 0.9	150C1F2	9119	31867	62527	9153	28950	-61314
Wind angle: -45°	150C1F3	9125	31454	62228	9153	28917	-61320
	380C2F1	0	0	0	0	0	0
	380C2F2	0	0	0	0	0	0
	380C2F3	0	0	0	0	0	0
	RTG	0	0	0	0	0	0

ZWW4HL450+5

Loadcases for tower strength (Special limit state)

		Ahead			Back		
Loadcase according to 50341-3-15	Att. Point	Vertical [N]	Transversal [N]	Longitudinal [N]	Vertical [N]	Transversal [N]	Longitudinal [N]
NL3/1a	GW / opgw	0	0	0	0	0	0
Wind, 10°C	150C1F1	0	0	0	0	0	0
Permanent loads yg= 1.2	150C1F2	0	0	0	0	0	0
Wind angle: 0°	150C1F3	0	0	0	0	0	0
	380C2F1	20819	66905	135227	20819	66905	-135227
	380C2F2	20823	66551	135076	20823	66551	-135076
	380C2F3	20828	66115	134911	20828	66115	-134911
	RTG	0	0	0	5646	18028	-36702
NL3/1b	GW / opgw	0	0	0	0	0	0
Wind, -20°C	150C1F1	0	0	0	0	0	0
Permanent loads yg= 1.2	150C1F2	0	0	0	0	0	0
Wind angle: 0°	150C1F3	0	0	0	0	0	0
	380C2F1	21034	71545	150891	21034	71545	-150891
	380C2F2	21035	71461	150898	21035	71461	-150898
	380C2F3	21035	71356	150910	21035	71356	-150910
	RTG	0	0	0	5694	19048	-40247
NL3/3	GW / opgw	0	0	0	0	0	0
Wind, -5°C	150C1F1	0	0	0	0	0	0
Permanent loads yg= 1.2	150C1F2	0	0	0	0	0	0
Wind angle: 0°	150C1F3	0	0	0	0	0	0
	380C2F1	24253	78262	160743	24253	78262	-160743
	380C2F2	24255	77985	160673	24255	77985	-160673
	380C2F3	24259	77643	160600	24259	77643	-160600
	RTG	0	0	0	9457	28796	-58667
NL3/4	GW / opgw	0	0	0	0	0	0
Construction/maintenance, +5°C	150C1F1	0	0	0	0	0	0
Permanent loads yg= 1.2	150C1F2	0	0	0	0	0	0
Wind angle: 0°	150C1F3	0	0	0	0	0	0
	380C2F1	23458	71623	151058	23458	71623	-151058
	380C2F2	23458	71542	151070	23458	71542	-151070
	380C2F3	23458	71439	151087	23458	71439	-151087
	RTG	0	0	0	6951	20916	-44251
NL3/1a	GW / opgw	0	0	0	0	0	0
Wind, 10°C	150C1F1	0	0	0	0	0	0
Permanent loads yg= 1.2	150C1F2	0	0	0	0	0	0
Wind angle: 45°	150C1F3	0	0	0	0	0	0
	380C2F1	20836	65324	134685	20369	95975	-165014
	380C2F2	20838	65119	134643	20414	92699	-160995
	380C2F3	20840	64865	134602	20474	88658	-156142
	RTG	0	0	0	5544	24668	-43215
NL3/1b	GW / opgw	0	0	0	0	0	0
Wind, -20°C	150C1F1	0	0	0	0	0	0
Permanent loads yg= 1.2	150C1F2	0	0	0	0	0	0
Wind angle: 45°	150C1F3	0	0	0	0	0	0
	380C2F1	21036	71160	150941	20957	77360	-153354
	380C2F2	21036	71108	150952	20968	76719	-152902
	380C2F3	21037	71042	150966	20981	75934	-152392
	RTG	0	0	0	5678	20381	-40729
NL3/3	GW / opgw	0	0	0	0	0	0
Wind, -5°C	150C1F1	0	0	0	0	0	0
Permanent loads yg= 1.2	150C1F2	0	0	0	0	0	0
Wind angle: 45°	150C1F3	0	0	0	0	0	0
	380C2F1	24264	77016	160518	23888	100234	-179896
	380C2F2	24266	76852	160508	23930	97729	-177104
	380C2F3	24267	76647	160503	23983	94658	-173796
	RTG	0	0	0	9303	38367	-67022
NL3/4	GW / opgw	0	0	0	0	0	0
Construction/maintenance, +5°C	150C1F1	0	0	0	0	0	0
Permanent loads yg= 1.2	150C1F2	0	0	0	0	0	0
Wind angle: 45°	150C1F3	0	0	0	0	0	0
	380C2F1	23459	71247	151127	23398	77107	-152805
	380C2F2	23459	71196	151139	23406	76513	-152455
	380C2F3	23459	71131	151156	23416	75784	-152064
	RTG	0	0	0	6939	22142	-44504
NL3/1a	GW / opgw	0	0	0	0	0	0
Wind, 10°C	150C1F1	0	0	0	0	0	0
Permanent loads yg= 1.2	150C1F2	0	0	0	0	0	0
Wind angle: 90°	150C1F3	0	0	0	0	0	0
	380C2F1	20412	92867	161199	20412	92867	-161199
	380C2F2	20455	89888	157605	20455	89888	-157605
	380C2F3	20511	86220	153287	20511	86220	-153287
	RTG	0	0	0	5555	23949	-42351

NL3/1b	GW / opgw	0	0	0	0	0	0
Wind, -20°C	150C1F1	0	0	0	0	0	0
Permanent loads yg= 1.2	150C1F2	0	0	0	0	0	0
Wind angle: 90°	150C1F3	0	0	0	0	0	0
	380C2F1	20967	76751	152925	20967	76751	-152925
	380C2F2	20977	76172	152542	20977	76172	-152542
	380C2F3	20988	75463	152111	20988	75463	-152111
	RTG	0	0	0	5680	20243	-40640
NL3/3	GW / opgw	0	0	0	0	0	0
Wind, -5°C	150C1F1	0	0	0	0	0	0
Permanent loads yg= 1.2	150C1F2	0	0	0	0	0	0
Wind angle: 90°	150C1F3	0	0	0	0	0	0
	380C2F1	23928	97857	177245	23928	97857	-177245
	380C2F2	23967	95591	174786	23967	95591	-174786
	380C2F3	24016	92816	171885	24016	92816	-171885
	RTG	0	0	0	9319	37342	-65889
NL3/4	GW / opgw	0	0	0	0	0	0
Construction/maintenance, +5°C	150C1F1	0	0	0	0	0	0
Permanent loads yg= 1.2	150C1F2	0	0	0	0	0	0
Wind angle: 90°	150C1F3	0	0	0	0	0	0
	380C2F1	23406	76544	152472	23406	76544	-152472
	380C2F2	23413	76006	152178	23413	76006	-152178
	380C2F3	23422	75345	151852	23422	75345	-151852
	RTG	0	0	0	6941	22018	-44447
NL3/1a	GW / opgw	0	0	0	0	0	0
Wind, 10°C	150C1F1	0	0	0	0	0	0
Permanent loads yg= 1.2	150C1F2	0	0	0	0	0	0
Wind angle: -45°	150C1F3	0	0	0	0	0	0
	380C2F1	20369	95975	165014	20836	65324	-134685
	380C2F2	20414	92699	160995	20838	65119	-134643
	380C2F3	20474	88658	156142	20840	64865	-134602
	RTG	0	0	0	5650	17664	-36599
NL3/1b	GW / opgw	0	0	0	0	0	0
Wind, -20°C	150C1F1	0	0	0	0	0	0
Permanent loads yg= 1.2	150C1F2	0	0	0	0	0	0
Wind angle: -45°	150C1F3	0	0	0	0	0	0
	380C2F1	20957	77360	153354	21036	71160	-150941
	380C2F2	20968	76719	152902	21036	71108	-150952
	380C2F3	20981	75934	152392	21037	71042	-150966
	RTG	0	0	0	5694	18958	-40261
NL3/3	GW / opgw	0	0	0	0	0	0
Wind, -5°C	150C1F1	0	0	0	0	0	0
Permanent loads yg= 1.2	150C1F2	0	0	0	0	0	0
Wind angle: -45°	150C1F3	0	0	0	0	0	0
	380C2F1	23888	100234	179896	24264	77016	-160518
	380C2F2	23930	97729	177104	24266	76852	-160508
	380C2F3	23983	94658	173796	24267	76647	-160503
	RTG	0	0	0	9463	28250	-58562
NL3/4	GW / opgw	0	0	0	0	0	0
Construction/maintenance, +5°C	150C1F1	0	0	0	0	0	0
Permanent loads yg= 1.2	150C1F2	0	0	0	0	0	0
Wind angle: -45°	150C1F3	0	0	0	0	0	0
	380C2F1	23398	77107	152805	23459	71247	-151127
	380C2F2	23406	76513	152455	23459	71196	-151139
	380C2F3	23416	75784	152064	23459	71131	-151156
	RTG	0	0	0	6951	20828	-44272
NL3/1a	GW / opgw	0	0	0	0	0	0
Wind, 10°C	150C1F1	0	0	0	0	0	0
Permanent loads yg= 0.9	150C1F2	0	0	0	0	0	0
Wind angle: 0°	150C1F3	0	0	0	0	0	0
	380C2F1	15647	53644	106791	15647	53644	-106791
	380C2F2	15653	53241	106534	15653	53241	-106534
	380C2F3	15660	52747	106246	15660	52747	-106246
	RTG	0	0	0	4243	14340	-28794
NL3/1b	GW / opgw	0	0	0	0	0	0
Wind, -20°C	150C1F1	0	0	0	0	0	0
Permanent loads yg= 0.9	150C1F2	0	0	0	0	0	0
Wind angle: 0°	150C1F3	0	0	0	0	0	0
	380C2F1	15854	57167	120058	15854	57167	-120058
	380C2F2	15855	57078	120053	15855	57078	-120053
	380C2F3	15855	56966	120052	15855	56966	-120052
	RTG	0	0	0	4288	15085	-31748

NL3/3	GW / opgw	0	0	0	0	0	0
Wind, -5°C	150C1F1	0	0	0	0	0	0
Permanent loads yg= 0.9	150C1F2	0	0	0	0	0	0
Wind angle: 0°	150C1F3	0	0	0	0	0	0
	380C2F1	19091	65045	132402	19091	65045	-132402
	380C2F2	19095	64742	132273	19095	64742	-132273
	380C2F3	19099	64368	132134	19099	64368	-132134
	RTG	0	0	0	8065	25516	-51634
NL3/4	GW / opgw	0	0	0	0	0	0
Construction/maintenance, +5°C	150C1F1	0	0	0	0	0	0
Permanent loads yg= 0.9	150C1F2	0	0	0	0	0	0
Wind angle: 0°	150C1F3	0	0	0	0	0	0
	380C2F1	18304	58345	122583	18304	58345	-122583
	380C2F2	18304	58259	122586	18304	58259	-122586
	380C2F3	18305	58152	122594	18305	58152	-122594
	RTG	0	0	0	5554	17325	-36551
NL3/1a	GW / opgw	0	0	0	0	0	0
Wind, 10°C	150C1F1	0	0	0	0	0	0
Permanent loads yg= 0.9	150C1F2	0	0	0	0	0	0
Wind angle: 45°	150C1F3	0	0	0	0	0	0
	380C2F1	15671	51862	105817	15171	87315	-146450
	380C2F2	15673	51636	105728	15211	83618	-141526
	380C2F3	15676	51356	105633	15265	79015	-135468
	RTG	0	0	0	4132	22062	-37629
NL3/1b	GW / opgw	0	0	0	0	0	0
Wind, -20°C	150C1F1	0	0	0	0	0	0
Permanent loads yg= 0.9	150C1F2	0	0	0	0	0	0
Wind angle: 45°	150C1F3	0	0	0	0	0	0
	380C2F1	15857	56760	120061	15751	63815	-124310
	380C2F2	15857	56706	120067	15765	63059	-123611
	380C2F3	15857	56637	120075	15782	62137	-122806
	RTG	0	0	0	4267	16594	-32608
NL3/3	GW / opgw	0	0	0	0	0	0
Wind, -5°C	150C1F1	0	0	0	0	0	0
Permanent loads yg= 0.9	150C1F2	0	0	0	0	0	0
Wind angle: 45°	150C1F3	0	0	0	0	0	0
	380C2F1	19106	63690	131942	18676	90137	-158249
	380C2F2	19108	63515	131907	18720	87290	-154723
	380C2F3	19110	63296	131873	18776	83782	-150478
	RTG	0	0	0	7898	35935	-61809
NL3/4	GW / opgw	0	0	0	0	0	0
Construction/maintenance, +5°C	150C1F1	0	0	0	0	0	0
Permanent loads yg= 0.9	150C1F2	0	0	0	0	0	0
Wind angle: 45°	150C1F3	0	0	0	0	0	0
	380C2F1	18306	57953	122619	18227	64410	-125579
	380C2F2	18306	57901	122628	18237	63735	-125054
	380C2F3	18306	57834	122641	18250	62909	-124455
	RTG	0	0	0	5540	18651	-37018
NL3/1a	GW / opgw	0	0	0	0	0	0
Wind, 10°C	150C1F1	0	0	0	0	0	0
Permanent loads yg= 0.9	150C1F2	0	0	0	0	0	0
Wind angle: 90°	150C1F3	0	0	0	0	0	0
	380C2F1	15209	83808	141777	15209	83808	-141777
	380C2F2	15248	80421	137308	15248	80421	-137308
	380C2F3	15301	76215	131837	15301	76215	-131837
	RTG	0	0	0	4142	21241	-36544
NL3/1b	GW / opgw	0	0	0	0	0	0
Wind, -20°C	150C1F1	0	0	0	0	0	0
Permanent loads yg= 0.9	150C1F2	0	0	0	0	0	0
Wind angle: 90°	150C1F3	0	0	0	0	0	0
	380C2F1	15764	63097	123645	15764	63097	-123645
	380C2F2	15777	62416	123044	15777	62416	-123044
	380C2F3	15791	61586	122354	15791	61586	-122354
	RTG	0	0	0	4270	16432	-32469
NL3/3	GW / opgw	0	0	0	0	0	0
Wind, -5°C	150C1F1	0	0	0	0	0	0
Permanent loads yg= 0.9	150C1F2	0	0	0	0	0	0
Wind angle: 90°	150C1F3	0	0	0	0	0	0
	380C2F1	18717	87435	154901	18717	87435	-154901
	380C2F2	18758	84849	151756	18758	84849	-151756
	380C2F3	18811	81670	147987	18811	81670	-147987
	RTG	0	0	0	7915	34825	-60492

NL3/4	GW / opgw	0	0	0	0	0	0
Construction/maintenance, +5°C	150C1F1	0	0	0	0	0	0
Permanent loads yg= 0.9	150C1F2	0	0	0	0	0	0
Wind angle: 90°	150C1F3	0	0	0	0	0	0
	380C2F1	18237	63769	125080	18237	63769	-125080
	380C2F2	18246	63159	124631	18246	63159	-124631
	380C2F3	18257	62413	124123	18257	62413	-124123
	RTG	0	0	0	5542	18514	-36932
NL3/1a	GW / opgw	0	0	0	0	0	0
Wind, 10°C	150C1F1	0	0	0	0	0	0
Permanent loads yg= 0.9	150C1F2	0	0	0	0	0	0
Wind angle: -45°	150C1F3	0	0	0	0	0	0
	380C2F1	15171	87315	146450	15671	51862	-105817
	380C2F2	15211	83618	141526	15673	51636	-105728
	380C2F3	15265	79015	135468	15676	51356	-105633
	RTG	0	0	0	4248	13934	-28600
NL3/1b	GW / opgw	0	0	0	0	0	0
Wind, -20°C	150C1F1	0	0	0	0	0	0
Permanent loads yg= 0.9	150C1F2	0	0	0	0	0	0
Wind angle: -45°	150C1F3	0	0	0	0	0	0
	380C2F1	15751	63815	124310	15857	56760	-120061
	380C2F2	15765	63059	123611	15857	56706	-120067
	380C2F3	15782	62137	122806	15857	56637	-120075
	RTG	0	0	0	4289	14991	-31753
NL3/3	GW / opgw	0	0	0	0	0	0
Wind, -5°C	150C1F1	0	0	0	0	0	0
Permanent loads yg= 0.9	150C1F2	0	0	0	0	0	0
Wind angle: -45°	150C1F3	0	0	0	0	0	0
	380C2F1	18676	90137	158249	19106	63690	-131942
	380C2F2	18720	87290	154723	19108	63515	-131907
	380C2F3	18776	83782	150478	19110	63296	-131873
	RTG	0	0	0	8072	24939	-51462
NL3/4	GW / opgw	0	0	0	0	0	0
Construction/maintenance, +5°C	150C1F1	0	0	0	0	0	0
Permanent loads yg= 0.9	150C1F2	0	0	0	0	0	0
Wind angle: -45°	150C1F3	0	0	0	0	0	0
	380C2F1	18227	64410	125579	18306	57953	-122619
	380C2F2	18237	63735	125054	18306	57901	-122628
	380C2F3	18250	62909	124455	18306	57834	-122641
	RTG	0	0	0	5554	17235	-36566

ZWW4HL450+5

Loadcases for tower strength (Special limit state)

		Ahead			Back		
Loadcase according to 50341-3-15	Att. Point	Vertical [N]	Transversal [N]	Longitudinal [N]	Vertical [N]	Transversal [N]	Longitudinal [N]
NL3/1a	GW / opgw	0	0	0	0	0	0
Wind, 10°C	150C1F1	0	0	0	0	0	0
Permanent loads yg= 1.2	150C1F2	0	0	0	0	0	0
Wind angle: 0°	150C1F3	0	0	0	0	0	0
	380C2F1	20819	66905	135227	20819	66905	-135227
	380C2F2	20823	66551	135076	20823	66551	-135076
	380C2F3	20828	66115	134911	20828	66115	-134911
	RTG	0	0	0	5646	18028	-36702
NL3/1b	GW / opgw	0	0	0	0	0	0
Wind, -20°C	150C1F1	0	0	0	0	0	0
Permanent loads yg= 1.2	150C1F2	0	0	0	0	0	0
Wind angle: 0°	150C1F3	0	0	0	0	0	0
	380C2F1	21034	71545	150891	21034	71545	-150891
	380C2F2	21035	71461	150898	21035	71461	-150898
	380C2F3	21035	71356	150910	21035	71356	-150910
	RTG	0	0	0	5694	19048	-40247
NL3/3	GW / opgw	0	0	0	0	0	0
Wind, -5°C	150C1F1	0	0	0	0	0	0
Permanent loads yg= 1.2	150C1F2	0	0	0	0	0	0
Wind angle: 0°	150C1F3	0	0	0	0	0	0
	380C2F1	24253	78262	160743	24253	78262	-160743
	380C2F2	24255	77985	160673	24255	77985	-160673
	380C2F3	24259	77643	160600	24259	77643	-160600
	RTG	0	0	0	9457	28796	-58667
NL3/4	GW / opgw	0	0	0	0	0	0
Construction/maintenance, +5°C	150C1F1	0	0	0	0	0	0
Permanent loads yg= 1.2	150C1F2	0	0	0	0	0	0
Wind angle: 0°	150C1F3	0	0	0	0	0	0
	380C2F1	23458	71623	151058	23458	71623	-151058
	380C2F2	23458	71542	151070	23458	71542	-151070
	380C2F3	23458	71439	151087	23458	71439	-151087
	RTG	0	0	0	6951	20916	-44251
NL3/1a	GW / opgw	0	0	0	0	0	0
Wind, 10°C	150C1F1	0	0	0	0	0	0
Permanent loads yg= 1.2	150C1F2	0	0	0	0	0	0
Wind angle: 45°	150C1F3	0	0	0	0	0	0
	380C2F1	20836	65324	134685	20369	95975	-165014
	380C2F2	20838	65119	134643	20414	92699	-160995
	380C2F3	20840	64865	134602	20474	88658	-156142
	RTG	0	0	0	5544	24668	-43215
NL3/1b	GW / opgw	0	0	0	0	0	0
Wind, -20°C	150C1F1	0	0	0	0	0	0
Permanent loads yg= 1.2	150C1F2	0	0	0	0	0	0
Wind angle: 45°	150C1F3	0	0	0	0	0	0
	380C2F1	21036	71160	150941	20957	77360	-153354
	380C2F2	21036	71108	150952	20968	76719	-152902
	380C2F3	21037	71042	150966	20981	75934	-152392
	RTG	0	0	0	5678	20381	-40729
NL3/3	GW / opgw	0	0	0	0	0	0
Wind, -5°C	150C1F1	0	0	0	0	0	0
Permanent loads yg= 1.2	150C1F2	0	0	0	0	0	0
Wind angle: 45°	150C1F3	0	0	0	0	0	0
	380C2F1	24264	77016	160518	23888	100234	-179896
	380C2F2	24266	76852	160508	23930	97729	-177104
	380C2F3	24267	76647	160503	23983	94658	-173796
	RTG	0	0	0	9303	38367	-67022
NL3/4	GW / opgw	0	0	0	0	0	0
Construction/maintenance, +5°C	150C1F1	0	0	0	0	0	0
Permanent loads yg= 1.2	150C1F2	0	0	0	0	0	0
Wind angle: 45°	150C1F3	0	0	0	0	0	0
	380C2F1	23459	71247	151127	23398	77107	-152805
	380C2F2	23459	71196	151139	23406	76513	-152455
	380C2F3	23459	71131	151156	23416	75784	-152064
	RTG	0	0	0	6939	22142	-44504
NL3/1a	GW / opgw	0	0	0	0	0	0
Wind, 10°C	150C1F1	0	0	0	0	0	0
Permanent loads yg= 1.2	150C1F2	0	0	0	0	0	0
Wind angle: 90°	150C1F3	0	0	0	0	0	0
	380C2F1	20412	92867	161199	20412	92867	-161199
	380C2F2	20455	89888	157605	20455	89888	-157605
	380C2F3	20511	86220	153287	20511	86220	-153287
	RTG	0	0	0	5555	23949	-42351

NL3/1b	GW / opgw	0	0	0	0	0	0
Wind, -20°C	150C1F1	0	0	0	0	0	0
Permanent loads yg= 1.2	150C1F2	0	0	0	0	0	0
Wind angle: 90°	150C1F3	0	0	0	0	0	0
	380C2F1	20967	76751	152925	20967	76751	-152925
	380C2F2	20977	76172	152542	20977	76172	-152542
	380C2F3	20988	75463	152111	20988	75463	-152111
	RTG	0	0	0	5680	20243	-40640
NL3/3	GW / opgw	0	0	0	0	0	0
Wind, -5°C	150C1F1	0	0	0	0	0	0
Permanent loads yg= 1.2	150C1F2	0	0	0	0	0	0
Wind angle: 90°	150C1F3	0	0	0	0	0	0
	380C2F1	23928	97857	177245	23928	97857	-177245
	380C2F2	23967	95591	174786	23967	95591	-174786
	380C2F3	24016	92816	171885	24016	92816	-171885
	RTG	0	0	0	9319	37342	-65889
NL3/4	GW / opgw	0	0	0	0	0	0
Construction/maintenance, +5°C	150C1F1	0	0	0	0	0	0
Permanent loads yg= 1.2	150C1F2	0	0	0	0	0	0
Wind angle: 90°	150C1F3	0	0	0	0	0	0
	380C2F1	23406	76544	152472	23406	76544	-152472
	380C2F2	23413	76006	152178	23413	76006	-152178
	380C2F3	23422	75345	151852	23422	75345	-151852
	RTG	0	0	0	6941	22018	-44447
NL3/1a	GW / opgw	0	0	0	0	0	0
Wind, 10°C	150C1F1	0	0	0	0	0	0
Permanent loads yg= 1.2	150C1F2	0	0	0	0	0	0
Wind angle: -45°	150C1F3	0	0	0	0	0	0
	380C2F1	20369	95975	165014	20836	65324	-134685
	380C2F2	20414	92699	160995	20838	65119	-134643
	380C2F3	20474	88658	156142	20840	64865	-134602
	RTG	0	0	0	5650	17664	-36599
NL3/1b	GW / opgw	0	0	0	0	0	0
Wind, -20°C	150C1F1	0	0	0	0	0	0
Permanent loads yg= 1.2	150C1F2	0	0	0	0	0	0
Wind angle: -45°	150C1F3	0	0	0	0	0	0
	380C2F1	20957	77360	153354	21036	71160	-150941
	380C2F2	20968	76719	152902	21036	71108	-150952
	380C2F3	20981	75934	152392	21037	71042	-150966
	RTG	0	0	0	5694	18958	-40261
NL3/3	GW / opgw	0	0	0	0	0	0
Wind, -5°C	150C1F1	0	0	0	0	0	0
Permanent loads yg= 1.2	150C1F2	0	0	0	0	0	0
Wind angle: -45°	150C1F3	0	0	0	0	0	0
	380C2F1	23888	100234	179896	24264	77016	-160518
	380C2F2	23930	97729	177104	24266	76852	-160508
	380C2F3	23983	94658	173796	24267	76647	-160503
	RTG	0	0	0	9463	28250	-58562
NL3/4	GW / opgw	0	0	0	0	0	0
Construction/maintenance, +5°C	150C1F1	0	0	0	0	0	0
Permanent loads yg= 1.2	150C1F2	0	0	0	0	0	0
Wind angle: -45°	150C1F3	0	0	0	0	0	0
	380C2F1	23398	77107	152805	23459	71247	-151127
	380C2F2	23406	76513	152455	23459	71196	-151139
	380C2F3	23416	75784	152064	23459	71131	-151156
	RTG	0	0	0	6951	20828	-44272
NL3/1a	GW / opgw	0	0	0	0	0	0
Wind, 10°C	150C1F1	0	0	0	0	0	0
Permanent loads yg= 0.9	150C1F2	0	0	0	0	0	0
Wind angle: 0°	150C1F3	0	0	0	0	0	0
	380C2F1	15647	53644	106791	15647	53644	-106791
	380C2F2	15653	53241	106534	15653	53241	-106534
	380C2F3	15660	52747	106246	15660	52747	-106246
	RTG	0	0	0	4243	14340	-28794
NL3/1b	GW / opgw	0	0	0	0	0	0
Wind, -20°C	150C1F1	0	0	0	0	0	0
Permanent loads yg= 0.9	150C1F2	0	0	0	0	0	0
Wind angle: 0°	150C1F3	0	0	0	0	0	0
	380C2F1	15854	57167	120058	15854	57167	-120058
	380C2F2	15855	57078	120053	15855	57078	-120053
	380C2F3	15855	56966	120052	15855	56966	-120052
	RTG	0	0	0	4288	15085	-31748

NL3/3	GW / opgw	0	0	0	0	0	0
Wind, -5°C	150C1F1	0	0	0	0	0	0
Permanent loads yg= 0.9	150C1F2	0	0	0	0	0	0
Wind angle: 0°	150C1F3	0	0	0	0	0	0
	380C2F1	19091	65045	132402	19091	65045	-132402
	380C2F2	19095	64742	132273	19095	64742	-132273
	380C2F3	19099	64368	132134	19099	64368	-132134
	RTG	0	0	0	8065	25516	-51634
NL3/4	GW / opgw	0	0	0	0	0	0
Construction/maintenance, +5°C	150C1F1	0	0	0	0	0	0
Permanent loads yg= 0.9	150C1F2	0	0	0	0	0	0
Wind angle: 0°	150C1F3	0	0	0	0	0	0
	380C2F1	18304	58345	122583	18304	58345	-122583
	380C2F2	18304	58259	122586	18304	58259	-122586
	380C2F3	18305	58152	122594	18305	58152	-122594
	RTG	0	0	0	5554	17325	-36551
NL3/1a	GW / opgw	0	0	0	0	0	0
Wind, 10°C	150C1F1	0	0	0	0	0	0
Permanent loads yg= 0.9	150C1F2	0	0	0	0	0	0
Wind angle: 45°	150C1F3	0	0	0	0	0	0
	380C2F1	15671	51862	105817	15171	87315	-146450
	380C2F2	15673	51636	105728	15211	83618	-141526
	380C2F3	15676	51356	105633	15265	79015	-135468
	RTG	0	0	0	4132	22062	-37629
NL3/1b	GW / opgw	0	0	0	0	0	0
Wind, -20°C	150C1F1	0	0	0	0	0	0
Permanent loads yg= 0.9	150C1F2	0	0	0	0	0	0
Wind angle: 45°	150C1F3	0	0	0	0	0	0
	380C2F1	15857	56760	120061	15751	63815	-124310
	380C2F2	15857	56706	120067	15765	63059	-123611
	380C2F3	15857	56637	120075	15782	62137	-122806
	RTG	0	0	0	4267	16594	-32608
NL3/3	GW / opgw	0	0	0	0	0	0
Wind, -5°C	150C1F1	0	0	0	0	0	0
Permanent loads yg= 0.9	150C1F2	0	0	0	0	0	0
Wind angle: 45°	150C1F3	0	0	0	0	0	0
	380C2F1	19106	63690	131942	18676	90137	-158249
	380C2F2	19108	63515	131907	18720	87290	-154723
	380C2F3	19110	63296	131873	18776	83782	-150478
	RTG	0	0	0	7898	35935	-61809
NL3/4	GW / opgw	0	0	0	0	0	0
Construction/maintenance, +5°C	150C1F1	0	0	0	0	0	0
Permanent loads yg= 0.9	150C1F2	0	0	0	0	0	0
Wind angle: 45°	150C1F3	0	0	0	0	0	0
	380C2F1	18306	57953	122619	18227	64410	-125579
	380C2F2	18306	57901	122628	18237	63735	-125054
	380C2F3	18306	57834	122641	18250	62909	-124455
	RTG	0	0	0	5540	18651	-37018
NL3/1a	GW / opgw	0	0	0	0	0	0
Wind, 10°C	150C1F1	0	0	0	0	0	0
Permanent loads yg= 0.9	150C1F2	0	0	0	0	0	0
Wind angle: 90°	150C1F3	0	0	0	0	0	0
	380C2F1	15209	83808	141777	15209	83808	-141777
	380C2F2	15248	80421	137308	15248	80421	-137308
	380C2F3	15301	76215	131837	15301	76215	-131837
	RTG	0	0	0	4142	21241	-36544
NL3/1b	GW / opgw	0	0	0	0	0	0
Wind, -20°C	150C1F1	0	0	0	0	0	0
Permanent loads yg= 0.9	150C1F2	0	0	0	0	0	0
Wind angle: 90°	150C1F3	0	0	0	0	0	0
	380C2F1	15764	63097	123645	15764	63097	-123645
	380C2F2	15777	62416	123044	15777	62416	-123044
	380C2F3	15791	61586	122354	15791	61586	-122354
	RTG	0	0	0	4270	16432	-32469
NL3/3	GW / opgw	0	0	0	0	0	0
Wind, -5°C	150C1F1	0	0	0	0	0	0
Permanent loads yg= 0.9	150C1F2	0	0	0	0	0	0
Wind angle: 90°	150C1F3	0	0	0	0	0	0
	380C2F1	18717	87435	154901	18717	87435	-154901
	380C2F2	18758	84849	151756	18758	84849	-151756
	380C2F3	18811	81670	147987	18811	81670	-147987
	RTG	0	0	0	7915	34825	-60492

NL3/4	GW / opgw	0	0	0	0	0	0
Construction/maintenance, +5°C	150C1F1	0	0	0	0	0	0
Permanent loads yg= 0.9	150C1F2	0	0	0	0	0	0
Wind angle: 90°	150C1F3	0	0	0	0	0	0
	380C2F1	18237	63769	125080	18237	63769	-125080
	380C2F2	18246	63159	124631	18246	63159	-124631
	380C2F3	18257	62413	124123	18257	62413	-124123
	RTG	0	0	0	5542	18514	-36932
NL3/1a	GW / opgw	0	0	0	0	0	0
Wind, 10°C	150C1F1	0	0	0	0	0	0
Permanent loads yg= 0.9	150C1F2	0	0	0	0	0	0
Wind angle: -45°	150C1F3	0	0	0	0	0	0
	380C2F1	15171	87315	146450	15671	51862	-105817
	380C2F2	15211	83618	141526	15673	51636	-105728
	380C2F3	15265	79015	135468	15676	51356	-105633
	RTG	0	0	0	4248	13934	-28600
NL3/1b	GW / opgw	0	0	0	0	0	0
Wind, -20°C	150C1F1	0	0	0	0	0	0
Permanent loads yg= 0.9	150C1F2	0	0	0	0	0	0
Wind angle: -45°	150C1F3	0	0	0	0	0	0
	380C2F1	15751	63815	124310	15857	56760	-120061
	380C2F2	15765	63059	123611	15857	56706	-120067
	380C2F3	15782	62137	122806	15857	56637	-120075
	RTG	0	0	0	4289	14991	-31753
NL3/3	GW / opgw	0	0	0	0	0	0
Wind, -5°C	150C1F1	0	0	0	0	0	0
Permanent loads yg= 0.9	150C1F2	0	0	0	0	0	0
Wind angle: -45°	150C1F3	0	0	0	0	0	0
	380C2F1	18676	90137	158249	19106	63690	-131942
	380C2F2	18720	87290	154723	19108	63515	-131907
	380C2F3	18776	83782	150478	19110	63296	-131873
	RTG	0	0	0	8072	24939	-51462
NL3/4	GW / opgw	0	0	0	0	0	0
Construction/maintenance, +5°C	150C1F1	0	0	0	0	0	0
Permanent loads yg= 0.9	150C1F2	0	0	0	0	0	0
Wind angle: -45°	150C1F3	0	0	0	0	0	0
	380C2F1	18227	64410	125579	18306	57953	-122619
	380C2F2	18237	63735	125054	18306	57901	-122628
	380C2F3	18250	62909	124455	18306	57834	-122641
	RTG	0	0	0	5554	17235	-36566

ZWW4HL450+5

Loadcases for tower strength (Special limit state)

		Ahead			Back		
Loadcase according to 50341-3-15	Att. Point	Vertical [N]	Transversal [N]	Longitudinal [N]	Vertical [N]	Transversal [N]	Longitudinal [N]
NL3/1a	GW / opgw	2823	9321	18524	0	0	0
Wind, 10°C	150C1F1	10409	33452	67613	0	0	0
Permanent loads yg= 1.2	150C1F2	10412	33276	67538	0	0	0
Wind angle: 0°	150C1F3	10414	33057	67456	0	0	0
	380C2F1	0	0	0	20819	66905	-135227
	380C2F2	0	0	0	20823	66551	-135076
	380C2F3	0	0	0	20828	66115	-134911
	RTG	0	0	0	5646	18028	-36702
NL3/1b	GW / opgw	2852	9668	20282	0	0	0
Wind, -20°C	150C1F1	10517	35772	75445	0	0	0
Permanent loads yg= 1.2	150C1F2	10517	35730	75449	0	0	0
Wind angle: 0°	150C1F3	10518	35678	75455	0	0	0
	380C2F1	0	0	0	21034	71545	-150891
	380C2F2	0	0	0	21035	71461	-150898
	380C2F3	0	0	0	21035	71356	-150910
	RTG	0	0	0	5694	19048	-40247
NL3/3	GW / opgw	4723	14865	29563	0	0	0
Wind, -5°C	150C1F1	12126	39131	80372	0	0	0
Permanent loads yg= 1.2	150C1F2	12128	38993	80336	0	0	0
Wind angle: 0°	150C1F3	12129	38821	80300	0	0	0
	380C2F1	0	0	0	24253	78262	-160743
	380C2F2	0	0	0	24255	77985	-160673
	380C2F3	0	0	0	24259	77643	-160600
	RTG	0	0	0	9457	28796	-58667
NL3/4	GW / opgw	3479	10540	22151	0	0	0
Construction/maintenance, +5°C	150C1F1	11729	35812	75529	0	0	0
Permanent loads yg= 1.2	150C1F2	11729	35771	75535	0	0	0
Wind angle: 0°	150C1F3	11729	35720	75543	0	0	0
	380C2F1	0	0	0	23458	71623	-151058
	380C2F2	0	0	0	23458	71542	-151070
	380C2F3	0	0	0	23458	71439	-151087
	RTG	0	0	0	6951	20916	-44251
NL3/1a	GW / opgw	2827	9012	18368	0	0	0
Wind, 10°C	150C1F1	10418	32662	67342	0	0	0
Permanent loads yg= 1.2	150C1F2	10419	32560	67321	0	0	0
Wind angle: 45°	150C1F3	10420	32433	67301	0	0	0
	380C2F1	0	0	0	20369	95975	-165014
	380C2F2	0	0	0	20414	92699	-160995
	380C2F3	0	0	0	20474	88658	-156142
	RTG	0	0	0	5544	24668	-43215
NL3/1b	GW / opgw	2853	9596	20284	0	0	0
Wind, -20°C	150C1F1	10518	35580	75471	0	0	0
Permanent loads yg= 1.2	150C1F2	10518	35554	75476	0	0	0
Wind angle: 45°	150C1F3	10518	35521	75483	0	0	0
	380C2F1	0	0	0	20957	77360	-153354
	380C2F2	0	0	0	20968	76719	-152902
	380C2F3	0	0	0	20981	75934	-152392
	RTG	0	0	0	5678	20381	-40729
NL3/3	GW / opgw	4729	14406	29377	0	0	0
Wind, -5°C	150C1F1	12132	38508	80259	0	0	0
Permanent loads yg= 1.2	150C1F2	12133	38426	80254	0	0	0
Wind angle: 45°	150C1F3	12134	38324	80252	0	0	0
	380C2F1	0	0	0	23888	100234	-179896
	380C2F2	0	0	0	23930	97729	-177104
	380C2F3	0	0	0	23983	94658	-173796
	RTG	0	0	0	9303	38367	-67022
NL3/4	GW / opgw	3480	10471	22160	0	0	0
Construction/maintenance, +5°C	150C1F1	11730	35623	75563	0	0	0
Permanent loads yg= 1.2	150C1F2	11730	35598	75570	0	0	0
Wind angle: 45°	150C1F3	11730	35566	75578	0	0	0
	380C2F1	0	0	0	23398	77107	-152805
	380C2F2	0	0	0	23406	76513	-152455
	380C2F3	0	0	0	23416	75784	-152064
	RTG	0	0	0	6939	22142	-44504
NL3/1a	GW / opgw	2748	14485	24322	0	0	0
Wind, 10°C	150C1F1	10206	46433	80599	0	0	0
Permanent loads yg= 1.2	150C1F2	10228	44944	78803	0	0	0
Wind angle: 90°	150C1F3	10255	43110	76644	0	0	0
	380C2F1	0	0	0	20412	92867	-161199
	380C2F2	0	0	0	20455	89888	-157605
	380C2F3	0	0	0	20511	86220	-153287
	RTG	0	0	0	5555	23949	-42351

NL3/1b	GW / opgw	2838	10688	20849	0	0	0
Wind, -20°C	150C1F1	10484	38376	76462	0	0	0
Permanent loads yg= 1.2	150C1F2	10488	38086	76271	0	0	0
Wind angle: 90°	150C1F3	10494	37731	76055	0	0	0
	380C2F1	0	0	0	20967	76751	-152925
	380C2F2	0	0	0	20977	76172	-152542
	380C2F3	0	0	0	20988	75463	-152111
	RTG	0	0	0	5680	20243	-40640
NL3/3	GW / opgw	4607	22301	37171	0	0	0
Wind, -5°C	150C1F1	11964	48928	88622	0	0	0
Permanent loads yg= 1.2	150C1F2	11984	47795	87393	0	0	0
Wind angle: 90°	150C1F3	12008	46408	85942	0	0	0
	380C2F1	0	0	0	23928	97857	-177245
	380C2F2	0	0	0	23967	95591	-174786
	380C2F3	0	0	0	24016	92816	-171885
	RTG	0	0	0	9319	37342	-65889
NL3/4	GW / opgw	3469	11461	22503	0	0	0
Construction/maintenance, +5°C	150C1F1	11703	38272	76236	0	0	0
Permanent loads yg= 1.2	150C1F2	11707	38003	76089	0	0	0
Wind angle: 90°	150C1F3	11711	37672	75926	0	0	0
	380C2F1	0	0	0	23406	76544	-152472
	380C2F2	0	0	0	23413	76006	-152178
	380C2F3	0	0	0	23422	75345	-151852
	RTG	0	0	0	6941	22018	-44447
NL3/1a	GW / opgw	2742	15085	25102	0	0	0
Wind, 10°C	150C1F1	10184	47987	82507	0	0	0
Permanent loads yg= 1.2	150C1F2	10207	46350	80497	0	0	0
Wind angle: -45°	150C1F3	10237	44329	78071	0	0	0
	380C2F1	0	0	0	20836	65324	-134685
	380C2F2	0	0	0	20838	65119	-134643
	380C2F3	0	0	0	20840	64865	-134602
	RTG	0	0	0	5650	17664	-36599
NL3/1b	GW / opgw	2835	10811	20956	0	0	0
Wind, -20°C	150C1F1	10479	38680	76677	0	0	0
Permanent loads yg= 1.2	150C1F2	10484	38359	76451	0	0	0
Wind angle: -45°	150C1F3	10490	37967	76196	0	0	0
	380C2F1	0	0	0	21036	71160	-150941
	380C2F2	0	0	0	21036	71108	-150952
	380C2F3	0	0	0	21037	71042	-150966
	RTG	0	0	0	5694	18958	-40261
NL3/3	GW / opgw	4597	23160	38214	0	0	0
Wind, -5°C	150C1F1	11944	50117	89948	0	0	0
Permanent loads yg= 1.2	150C1F2	11965	48864	88552	0	0	0
Wind angle: -45°	150C1F3	11992	47329	86898	0	0	0
	380C2F1	0	0	0	24264	77016	-160518
	380C2F2	0	0	0	24266	76852	-160508
	380C2F3	0	0	0	24267	76647	-160503
	RTG	0	0	0	9463	28250	-58562
NL3/4	GW / opgw	3467	11568	22578	0	0	0
Construction/maintenance, +5°C	150C1F1	11699	38554	76403	0	0	0
Permanent loads yg= 1.2	150C1F2	11703	38257	76228	0	0	0
Wind angle: -45°	150C1F3	11708	37892	76032	0	0	0
	380C2F1	0	0	0	23459	71247	-151127
	380C2F2	0	0	0	23459	71196	-151139
	380C2F3	0	0	0	23459	71131	-151156
	RTG	0	0	0	6951	20828	-44272
NL3/1a	GW / opgw	2120	7522	14666	0	0	0
Wind, 10°C	150C1F1	7824	26822	53396	0	0	0
Permanent loads yg= 0.9	150C1F2	7827	26621	53267	0	0	0
Wind angle: 0°	150C1F3	7830	26374	53123	0	0	0
	380C2F1	0	0	0	15647	53644	-106791
	380C2F2	0	0	0	15653	53241	-106534
	380C2F3	0	0	0	15660	52747	-106246
	RTG	0	0	0	4243	14340	-28794
NL3/1b	GW / opgw	2148	7686	16032	0	0	0
Wind, -20°C	150C1F1	7927	28583	60029	0	0	0
Permanent loads yg= 0.9	150C1F2	7927	28539	60027	0	0	0
Wind angle: 0°	150C1F3	7928	28483	60026	0	0	0
	380C2F1	0	0	0	15854	57167	-120058
	380C2F2	0	0	0	15855	57078	-120053
	380C2F3	0	0	0	15855	56966	-120052
	RTG	0	0	0	4288	15085	-31748

NL3/3	GW / opgw	4025	13257	26116	0	0	0
Wind, -5°C	150C1F1	9545	32523	66201	0	0	0
Permanent loads yg= 0.9	150C1F2	9547	32371	66137	0	0	0
Wind angle: 0°	150C1F3	9550	32184	66067	0	0	0
	380C2F1	0	0	0	19091	65045	-132402
	380C2F2	0	0	0	19095	64742	-132273
	380C2F3	0	0	0	19099	64368	-132134
	RTG	0	0	0	8065	25516	-51634
NL3/4	GW / opgw	2780	8747	18308	0	0	0
Construction/maintenance, +5°C	150C1F1	9152	29172	61291	0	0	0
Permanent loads yg= 0.9	150C1F2	9152	29130	61293	0	0	0
Wind angle: 0°	150C1F3	9152	29076	61297	0	0	0
	380C2F1	0	0	0	18304	58345	-122583
	380C2F2	0	0	0	18304	58259	-122586
	380C2F3	0	0	0	18305	58152	-122594
	RTG	0	0	0	5554	17325	-36551
NL3/1a	GW / opgw	2125	7168	14412	0	0	0
Wind, 10°C	150C1F1	7835	25931	52908	0	0	0
Permanent loads yg= 0.9	150C1F2	7837	25818	52864	0	0	0
Wind angle: 45°	150C1F3	7838	25678	52816	0	0	0
	380C2F1	0	0	0	15171	87315	-146450
	380C2F2	0	0	0	15211	83618	-141526
	380C2F3	0	0	0	15265	79015	-135468
	RTG	0	0	0	4132	22062	-37629
NL3/1b	GW / opgw	2149	7610	16024	0	0	0
Wind, -20°C	150C1F1	7928	28380	60031	0	0	0
Permanent loads yg= 0.9	150C1F2	7928	28353	60033	0	0	0
Wind angle: 45°	150C1F3	7929	28319	60038	0	0	0
	380C2F1	0	0	0	15751	63815	-124310
	380C2F2	0	0	0	15765	63059	-123611
	380C2F3	0	0	0	15782	62137	-122806
	RTG	0	0	0	4267	16594	-32608
NL3/3	GW / opgw	4032	12765	25858	0	0	0
Wind, -5°C	150C1F1	9553	31845	65971	0	0	0
Permanent loads yg= 0.9	150C1F2	9554	31757	65953	0	0	0
Wind angle: 45°	150C1F3	9555	31648	65936	0	0	0
	380C2F1	0	0	0	18676	90137	-158249
	380C2F2	0	0	0	18720	87290	-154723
	380C2F3	0	0	0	18776	83782	-150478
	RTG	0	0	0	7898	35935	-61809
NL3/4	GW / opgw	2780	8676	18311	0	0	0
Construction/maintenance, +5°C	150C1F1	9153	28977	61309	0	0	0
Permanent loads yg= 0.9	150C1F2	9153	28950	61314	0	0	0
Wind angle: 45°	150C1F3	9153	28917	61320	0	0	0
	380C2F1	0	0	0	18227	64410	-125579
	380C2F2	0	0	0	18237	63735	-125054
	380C2F3	0	0	0	18250	62909	-124455
	RTG	0	0	0	5540	18651	-37018
NL3/1a	GW / opgw	2045	13438	22076	0	0	0
Wind, 10°C	150C1F1	7604	41904	70889	0	0	0
Permanent loads yg= 0.9	150C1F2	7624	40210	68654	0	0	0
Wind angle: 90°	150C1F3	7651	38107	65918	0	0	0
	380C2F1	0	0	0	15209	83808	-141777
	380C2F2	0	0	0	15248	80421	-137308
	380C2F3	0	0	0	15301	76215	-131837
	RTG	0	0	0	4142	21241	-36544
NL3/1b	GW / opgw	2129	8867	16944	0	0	0
Wind, -20°C	150C1F1	7882	31549	61823	0	0	0
Permanent loads yg= 0.9	150C1F2	7888	31208	61522	0	0	0
Wind angle: 90°	150C1F3	7896	30793	61177	0	0	0
	380C2F1	0	0	0	15764	63097	-123645
	380C2F2	0	0	0	15777	62416	-123044
	380C2F3	0	0	0	15791	61586	-122354
	RTG	0	0	0	4270	16432	-32469
NL3/3	GW / opgw	3906	21309	35045	0	0	0
Wind, -5°C	150C1F1	9359	43718	77451	0	0	0
Permanent loads yg= 0.9	150C1F2	9379	42424	75878	0	0	0
Wind angle: 90°	150C1F3	9405	40835	73994	0	0	0
	380C2F1	0	0	0	18717	87435	-154901
	380C2F2	0	0	0	18758	84849	-151756
	380C2F3	0	0	0	18811	81670	-147987
	RTG	0	0	0	7915	34825	-60492

NL3/4	GW / opgw	2767	9761	18859	0	0	0
Construction/maintenance, +5°C	150C1F1	9118	31885	62540	0	0	0
Permanent loads yg= 0.9	150C1F2	9123	31580	62316	0	0	0
Wind angle: 90°	150C1F3	9129	31207	62061	0	0	0
	380C2F1	0	0	0	18237	63769	-125080
	380C2F2	0	0	0	18246	63159	-124631
	380C2F3	0	0	0	18257	62413	-124123
	RTG	0	0	0	5542	18514	-36932
NL3/1a	GW / opgw	2040	14095	22981	0	0	0
Wind, 10°C	150C1F1	7585	43658	73225	0	0	0
Permanent loads yg= 0.9	150C1F2	7606	41809	70763	0	0	0
Wind angle: -45°	150C1F3	7633	39507	67734	0	0	0
	380C2F1	0	0	0	15671	51862	-105817
	380C2F2	0	0	0	15673	51636	-105728
	380C2F3	0	0	0	15676	51356	-105633
	RTG	0	0	0	4248	13934	-28600
NL3/1b	GW / opgw	2127	9013	17100	0	0	0
Wind, -20°C	150C1F1	7875	31907	62155	0	0	0
Permanent loads yg= 0.9	150C1F2	7882	31529	61805	0	0	0
Wind angle: -45°	150C1F3	7891	31068	61403	0	0	0
	380C2F1	0	0	0	15857	56760	-120061
	380C2F2	0	0	0	15857	56706	-120067
	380C2F3	0	0	0	15857	56637	-120075
	RTG	0	0	0	4289	14991	-31753
NL3/3	GW / opgw	3897	22219	36198	0	0	0
Wind, -5°C	150C1F1	9338	45069	79125	0	0	0
Permanent loads yg= 0.9	150C1F2	9360	43645	77361	0	0	0
Wind angle: -45°	150C1F3	9388	41891	75239	0	0	0
	380C2F1	0	0	0	19106	63690	-131942
	380C2F2	0	0	0	19108	63515	-131907
	380C2F3	0	0	0	19110	63296	-131873
	RTG	0	0	0	8072	24939	-51462
NL3/4	GW / opgw	2765	9882	18963	0	0	0
Construction/maintenance, +5°C	150C1F1	9113	32205	62790	0	0	0
Permanent loads yg= 0.9	150C1F2	9119	31867	62527	0	0	0
Wind angle: -45°	150C1F3	9125	31454	62228	0	0	0
	380C2F1	0	0	0	18306	57953	-122619
	380C2F2	0	0	0	18306	57901	-122628
	380C2F3	0	0	0	18306	57834	-122641
	RTG	0	0	0	5554	17235	-36566

ZWW4HL450+5

Loadcases for tower strength (Special limit state)

		Ahead			Back		
Loadcase according to 50341-3-15	Att. Point	Vertical [N]	Transversal [N]	Longitudinal [N]	Vertical [N]	Transversal [N]	Longitudinal [N]
NL3/1a	GW / opgw	0	0	0	2823	9321	-18524
Wind, 10°C	150C1F1	0	0	0	10409	33452	-67613
Permanent loads yg= 1.2	150C1F2	0	0	0	10412	33276	-67538
Wind angle: 0°	150C1F3	0	0	0	10414	33057	-67456
	380C2F1	20819	66905	135227	20819	66905	-135227
	380C2F2	20823	66551	135076	20823	66551	-135076
	380C2F3	20828	66115	134911	20828	66115	-134911
	RTG	5646	18028	36702	5646	18028	-36702
NL3/1b	GW / opgw	0	0	0	2852	9668	-20282
Wind, -20°C	150C1F1	0	0	0	10517	35772	-75445
Permanent loads yg= 1.2	150C1F2	0	0	0	10517	35730	-75449
Wind angle: 0°	150C1F3	0	0	0	10518	35678	-75455
	380C2F1	21034	71545	150891	21034	71545	-150891
	380C2F2	21035	71461	150898	21035	71461	-150898
	380C2F3	21035	71356	150910	21035	71356	-150910
	RTG	5694	19048	40247	5694	19048	-40247
NL3/3	GW / opgw	0	0	0	4723	14865	-29563
Wind, -5°C	150C1F1	0	0	0	12126	39131	-80372
Permanent loads yg= 1.2	150C1F2	0	0	0	12128	38993	-80336
Wind angle: 0°	150C1F3	0	0	0	12129	38821	-80300
	380C2F1	24253	78262	160743	24253	78262	-160743
	380C2F2	24255	77985	160673	24255	77985	-160673
	380C2F3	24259	77643	160600	24259	77643	-160600
	RTG	9457	28796	58667	9457	28796	-58667
NL3/4	GW / opgw	0	0	0	3479	10540	-22151
Construction/maintenance, +5°C	150C1F1	0	0	0	11729	35812	-75529
Permanent loads yg= 1.2	150C1F2	0	0	0	11729	35771	-75535
Wind angle: 0°	150C1F3	0	0	0	11729	35720	-75543
	380C2F1	23458	71623	151058	23458	71623	-151058
	380C2F2	23458	71542	151070	23458	71542	-151070
	380C2F3	23458	71439	151087	23458	71439	-151087
	RTG	6951	20916	44251	6951	20916	-44251
NL3/1a	GW / opgw	0	0	0	2742	15085	-25102
Wind, 10°C	150C1F1	0	0	0	10184	47987	-82507
Permanent loads yg= 1.2	150C1F2	0	0	0	10207	46350	-80497
Wind angle: 45°	150C1F3	0	0	0	10237	44329	-78071
	380C2F1	20836	65324	134685	20369	95975	-165014
	380C2F2	20838	65119	134643	20414	92699	-160995
	380C2F3	20840	64865	134602	20474	88658	-156142
	RTG	5650	17664	36599	5544	24668	-43215
NL3/1b	GW / opgw	0	0	0	2835	10811	-20956
Wind, -20°C	150C1F1	0	0	0	10479	38680	-76677
Permanent loads yg= 1.2	150C1F2	0	0	0	10484	38359	-76451
Wind angle: 45°	150C1F3	0	0	0	10490	37967	-76196
	380C2F1	21036	71160	150941	20957	77360	-153354
	380C2F2	21036	71108	150952	20968	76719	-152902
	380C2F3	21037	71042	150966	20981	75934	-152392
	RTG	5694	18958	40261	5678	20381	-40729
NL3/3	GW / opgw	0	0	0	4597	23160	-38214
Wind, -5°C	150C1F1	0	0	0	11944	50117	-89948
Permanent loads yg= 1.2	150C1F2	0	0	0	11965	48864	-88552
Wind angle: 45°	150C1F3	0	0	0	11992	47329	-86898
	380C2F1	24264	77016	160518	23888	100234	-179896
	380C2F2	24266	76852	160508	23930	97729	-177104
	380C2F3	24267	76647	160503	23983	94658	-173796
	RTG	9463	28250	58562	9303	38367	-67022
NL3/4	GW / opgw	0	0	0	3467	11568	-22578
Construction/maintenance, +5°C	150C1F1	0	0	0	11699	38554	-76403
Permanent loads yg= 1.2	150C1F2	0	0	0	11703	38257	-76228
Wind angle: 45°	150C1F3	0	0	0	11708	37892	-76032
	380C2F1	23459	71247	151127	23398	77107	-152805
	380C2F2	23459	71196	151139	23406	76513	-152455
	380C2F3	23459	71131	151156	23416	75784	-152064
	RTG	6951	20828	44272	6939	22142	-44504
NL3/1a	GW / opgw	0	0	0	2748	14485	-24322
Wind, 10°C	150C1F1	0	0	0	10206	46433	-80599
Permanent loads yg= 1.2	150C1F2	0	0	0	10228	44944	-78803
Wind angle: 90°	150C1F3	0	0	0	10255	43110	-76644
	380C2F1	20412	92867	161199	20412	92867	-161199
	380C2F2	20455	89888	157605	20455	89888	-157605
	380C2F3	20511	86220	153287	20511	86220	-153287
	RTG	5555	23949	42351	5555	23949	-42351

NL3/1b	GW / opgw	0	0	0	2838	10688	-20849
Wind, -20°C	150C1F1	0	0	0	10484	38376	-76462
Permanent loads yg= 1.2	150C1F2	0	0	0	10488	38086	-76271
Wind angle: 90°	150C1F3	0	0	0	10494	37731	-76055
	380C2F1	20967	76751	152925	20967	76751	-152925
	380C2F2	20977	76172	152542	20977	76172	-152542
	380C2F3	20988	75463	152111	20988	75463	-152111
	RTG	5680	20243	40640	5680	20243	-40640
NL3/3	GW / opgw	0	0	0	4607	22301	-37171
Wind, -5°C	150C1F1	0	0	0	11964	48928	-88622
Permanent loads yg= 1.2	150C1F2	0	0	0	11984	47795	-87393
Wind angle: 90°	150C1F3	0	0	0	12008	46408	-85942
	380C2F1	23928	97857	177245	23928	97857	-177245
	380C2F2	23967	95591	174786	23967	95591	-174786
	380C2F3	24016	92816	171885	24016	92816	-171885
	RTG	9319	37342	65889	9319	37342	-65889
NL3/4	GW / opgw	0	0	0	3469	11461	-22503
Construction/maintenance, +5°C	150C1F1	0	0	0	11703	38272	-76236
Permanent loads yg= 1.2	150C1F2	0	0	0	11707	38003	-76089
Wind angle: 90°	150C1F3	0	0	0	11711	37672	-75926
	380C2F1	23406	76544	152472	23406	76544	-152472
	380C2F2	23413	76006	152178	23413	76006	-152178
	380C2F3	23422	75345	151852	23422	75345	-151852
	RTG	6941	22018	44447	6941	22018	-44447
NL3/1a	GW / opgw	0	0	0	2827	9012	-18368
Wind, 10°C	150C1F1	0	0	0	10418	32662	-67342
Permanent loads yg= 1.2	150C1F2	0	0	0	10419	32560	-67321
Wind angle: -45°	150C1F3	0	0	0	10420	32433	-67301
	380C2F1	20369	95975	165014	20836	65324	-134685
	380C2F2	20414	92699	160995	20838	65119	-134643
	380C2F3	20474	88658	156142	20840	64865	-134602
	RTG	5544	24668	43215	5650	17664	-36599
NL3/1b	GW / opgw	0	0	0	2853	9596	-20284
Wind, -20°C	150C1F1	0	0	0	10518	35580	-75471
Permanent loads yg= 1.2	150C1F2	0	0	0	10518	35554	-75476
Wind angle: -45°	150C1F3	0	0	0	10518	35521	-75483
	380C2F1	20957	77360	153354	21036	71160	-150941
	380C2F2	20968	76719	152902	21036	71108	-150952
	380C2F3	20981	75934	152392	21037	71042	-150966
	RTG	5678	20381	40729	5694	18958	-40261
NL3/3	GW / opgw	0	0	0	4729	14406	-29377
Wind, -5°C	150C1F1	0	0	0	12132	38508	-80259
Permanent loads yg= 1.2	150C1F2	0	0	0	12133	38426	-80254
Wind angle: -45°	150C1F3	0	0	0	12134	38324	-80252
	380C2F1	23888	100234	179896	24264	77016	-160518
	380C2F2	23930	97729	177104	24266	76852	-160508
	380C2F3	23983	94658	173796	24267	76647	-160503
	RTG	9303	38367	67022	9463	28250	-58562
NL3/4	GW / opgw	0	0	0	3480	10471	-22160
Construction/maintenance, +5°C	150C1F1	0	0	0	11730	35623	-75563
Permanent loads yg= 1.2	150C1F2	0	0	0	11730	35598	-75570
Wind angle: -45°	150C1F3	0	0	0	11730	35566	-75578
	380C2F1	23398	77107	152805	23459	71247	-151127
	380C2F2	23406	76513	152455	23459	71196	-151139
	380C2F3	23416	75784	152064	23459	71131	-151156
	RTG	6939	22142	44504	6951	20828	-44272
NL3/1a	GW / opgw	0	0	0	2120	7522	-14666
Wind, 10°C	150C1F1	0	0	0	7824	26822	-53396
Permanent loads yg= 0.9	150C1F2	0	0	0	7827	26621	-53267
Wind angle: 0°	150C1F3	0	0	0	7830	26374	-53123
	380C2F1	15647	53644	106791	15647	53644	-106791
	380C2F2	15653	53241	106534	15653	53241	-106534
	380C2F3	15660	52747	106246	15660	52747	-106246
	RTG	4243	14340	28794	4243	14340	-28794
NL3/1b	GW / opgw	0	0	0	2148	7686	-16032
Wind, -20°C	150C1F1	0	0	0	7927	28583	-60029
Permanent loads yg= 0.9	150C1F2	0	0	0	7927	28539	-60027
Wind angle: 0°	150C1F3	0	0	0	7928	28483	-60026
	380C2F1	15854	57167	120058	15854	57167	-120058
	380C2F2	15855	57078	120053	15855	57078	-120053
	380C2F3	15855	56966	120052	15855	56966	-120052
	RTG	4288	15085	31748	4288	15085	-31748

NL3/3	GW / opgw	0	0	0	4025	13257	-26116
Wind, -5°C	150C1F1	0	0	0	9545	32523	-66201
Permanent loads yg= 0.9	150C1F2	0	0	0	9547	32371	-66137
Wind angle: 0°	150C1F3	0	0	0	9550	32184	-66067
	380C2F1	19091	65045	132402	19091	65045	-132402
	380C2F2	19095	64742	132273	19095	64742	-132273
	380C2F3	19099	64368	132134	19099	64368	-132134
	RTG	8065	25516	51634	8065	25516	-51634
NL3/4	GW / opgw	0	0	0	2780	8747	-18308
Construction/maintenance, +5°C	150C1F1	0	0	0	9152	29172	-61291
Permanent loads yg= 0.9	150C1F2	0	0	0	9152	29130	-61293
Wind angle: 0°	150C1F3	0	0	0	9152	29076	-61297
	380C2F1	18304	58345	122583	18304	58345	-122583
	380C2F2	18304	58259	122586	18304	58259	-122586
	380C2F3	18305	58152	122594	18305	58152	-122594
	RTG	5554	17325	36551	5554	17325	-36551
NL3/1a	GW / opgw	0	0	0	2040	14095	-22981
Wind, 10°C	150C1F1	0	0	0	7585	43658	-73225
Permanent loads yg= 0.9	150C1F2	0	0	0	7606	41809	-70763
Wind angle: 45°	150C1F3	0	0	0	7633	39507	-67734
	380C2F1	15671	51862	105817	15171	87315	-146450
	380C2F2	15673	51636	105728	15211	83618	-141526
	380C2F3	15676	51356	105633	15265	79015	-135468
	RTG	4248	13934	28600	4132	22062	-37629
NL3/1b	GW / opgw	0	0	0	2127	9013	-17100
Wind, -20°C	150C1F1	0	0	0	7875	31907	-62155
Permanent loads yg= 0.9	150C1F2	0	0	0	7882	31529	-61805
Wind angle: 45°	150C1F3	0	0	0	7891	31068	-61403
	380C2F1	15857	56760	120061	15751	63815	-124310
	380C2F2	15857	56706	120067	15765	63059	-123611
	380C2F3	15857	56637	120075	15782	62137	-122806
	RTG	4289	14991	31753	4267	16594	-32608
NL3/3	GW / opgw	0	0	0	3897	22219	-36198
Wind, -5°C	150C1F1	0	0	0	9338	45069	-79125
Permanent loads yg= 0.9	150C1F2	0	0	0	9360	43645	-77361
Wind angle: 45°	150C1F3	0	0	0	9388	41891	-75239
	380C2F1	19106	63690	131942	18676	90137	-158249
	380C2F2	19108	63515	131907	18720	87290	-154723
	380C2F3	19110	63296	131873	18776	83782	-150478
	RTG	8072	24939	51462	7898	35935	-61809
NL3/4	GW / opgw	0	0	0	2765	9882	-18963
Construction/maintenance, +5°C	150C1F1	0	0	0	9113	32205	-62790
Permanent loads yg= 0.9	150C1F2	0	0	0	9119	31867	-62527
Wind angle: 45°	150C1F3	0	0	0	9125	31454	-62228
	380C2F1	18306	57953	122619	18227	64410	-125579
	380C2F2	18306	57901	122628	18237	63735	-125054
	380C2F3	18306	57834	122641	18250	62909	-124455
	RTG	5554	17235	36566	5540	18651	-37018
NL3/1a	GW / opgw	0	0	0	2045	13438	-22076
Wind, 10°C	150C1F1	0	0	0	7604	41904	-70889
Permanent loads yg= 0.9	150C1F2	0	0	0	7624	40210	-68654
Wind angle: 90°	150C1F3	0	0	0	7651	38107	-65918
	380C2F1	15209	83808	141777	15209	83808	-141777
	380C2F2	15248	80421	137308	15248	80421	-137308
	380C2F3	15301	76215	131837	15301	76215	-131837
	RTG	4142	21241	36544	4142	21241	-36544
NL3/1b	GW / opgw	0	0	0	2129	8867	-16944
Wind, -20°C	150C1F1	0	0	0	7882	31549	-61823
Permanent loads yg= 0.9	150C1F2	0	0	0	7888	31208	-61522
Wind angle: 90°	150C1F3	0	0	0	7896	30793	-61177
	380C2F1	15764	63097	123645	15764	63097	-123645
	380C2F2	15777	62416	123044	15777	62416	-123044
	380C2F3	15791	61586	122354	15791	61586	-122354
	RTG	4270	16432	32469	4270	16432	-32469
NL3/3	GW / opgw	0	0	0	3906	21309	-35045
Wind, -5°C	150C1F1	0	0	0	9359	43718	-77451
Permanent loads yg= 0.9	150C1F2	0	0	0	9379	42424	-75878
Wind angle: 90°	150C1F3	0	0	0	9405	40835	-73994
	380C2F1	18717	87435	154901	18717	87435	-154901
	380C2F2	18758	84849	151756	18758	84849	-151756
	380C2F3	18811	81670	147987	18811	81670	-147987
	RTG	7915	34825	60492	7915	34825	-60492

NL3/4	GW / opgw	0	0	0	2767	9761	-18859
Construction/maintenance, +5°C	150C1F1	0	0	0	9118	31885	-62540
Permanent loads yg= 0.9	150C1F2	0	0	0	9123	31580	-62316
Wind angle: 90°	150C1F3	0	0	0	9129	31207	-62061
	380C2F1	18237	63769	125080	18237	63769	-125080
	380C2F2	18246	63159	124631	18246	63159	-124631
	380C2F3	18257	62413	124123	18257	62413	-124123
	RTG	5542	18514	36932	5542	18514	-36932
NL3/1a	GW / opgw	0	0	0	2125	7168	-14412
Wind, 10°C	150C1F1	0	0	0	7835	25931	-52908
Permanent loads yg= 0.9	150C1F2	0	0	0	7837	25818	-52864
Wind angle: -45°	150C1F3	0	0	0	7838	25678	-52816
	380C2F1	15171	87315	146450	15671	51862	-105817
	380C2F2	15211	83618	141526	15673	51636	-105728
	380C2F3	15265	79015	135468	15676	51356	-105633
	RTG	4132	22062	37629	4248	13934	-28600
NL3/1b	GW / opgw	0	0	0	2149	7610	-16024
Wind, -20°C	150C1F1	0	0	0	7928	28380	-60031
Permanent loads yg= 0.9	150C1F2	0	0	0	7928	28353	-60033
Wind angle: -45°	150C1F3	0	0	0	7929	28319	-60038
	380C2F1	15751	63815	124310	15857	56760	-120061
	380C2F2	15765	63059	123611	15857	56706	-120067
	380C2F3	15782	62137	122806	15857	56637	-120075
	RTG	4267	16594	32608	4289	14991	-31753
NL3/3	GW / opgw	0	0	0	4032	12765	-25858
Wind, -5°C	150C1F1	0	0	0	9553	31845	-65971
Permanent loads yg= 0.9	150C1F2	0	0	0	9554	31757	-65953
Wind angle: -45°	150C1F3	0	0	0	9555	31648	-65936
	380C2F1	18676	90137	158249	19106	63690	-131942
	380C2F2	18720	87290	154723	19108	63515	-131907
	380C2F3	18776	83782	150478	19110	63296	-131873
	RTG	7898	35935	61809	8072	24939	-51462
NL3/4	GW / opgw	0	0	0	2780	8676	-18311
Construction/maintenance, +5°C	150C1F1	0	0	0	9153	28977	-61309
Permanent loads yg= 0.9	150C1F2	0	0	0	9153	28950	-61314
Wind angle: -45°	150C1F3	0	0	0	9153	28917	-61320
	380C2F1	18227	64410	125579	18306	57953	-122619
	380C2F2	18237	63735	125054	18306	57901	-122628
	380C2F3	18250	62909	124455	18306	57834	-122641
	RTG	5540	18651	37018	5554	17235	-36566

ZWW4HL450+5

Loadcases for tower strength (Special limit state)

		Ahead			Back		
Loadcase according to 50341-3-15	Att. Point	Vertical [N]	Transversal [N]	Longitudinal [N]	Vertical [N]	Transversal [N]	Longitudinal [N]
NL3/1a	GW / opgw	2823	9321	18524	2823	9321	-18524
Wind, 10°C	150C1F1	10409	33452	67613	10409	33452	-67613
Permanent loads yg= 1.2	150C1F2	10412	33276	67538	10412	33276	-67538
Wind angle: 0°	150C1F3	10414	33057	67456	10414	33057	-67456
	380C2F1	0	0	0	20819	66905	-135227
	380C2F2	0	0	0	20823	66551	-135076
	380C2F3	0	0	0	20828	66115	-134911
	RTG	0	0	0	5646	18028	-36702
NL3/1b	GW / opgw	2852	9668	20282	2852	9668	-20282
Wind, -20°C	150C1F1	10517	35772	75445	10517	35772	-75445
Permanent loads yg= 1.2	150C1F2	10517	35730	75449	10517	35730	-75449
Wind angle: 0°	150C1F3	10518	35678	75455	10518	35678	-75455
	380C2F1	0	0	0	21034	71545	-150891
	380C2F2	0	0	0	21035	71461	-150898
	380C2F3	0	0	0	21035	71356	-150910
	RTG	0	0	0	5694	19048	-40247
NL3/3	GW / opgw	4723	14865	29563	4723	14865	-29563
Wind, -5°C	150C1F1	12126	39131	80372	12126	39131	-80372
Permanent loads yg= 1.2	150C1F2	12128	38993	80336	12128	38993	-80336
Wind angle: 0°	150C1F3	12129	38821	80300	12129	38821	-80300
	380C2F1	0	0	0	24253	78262	-160743
	380C2F2	0	0	0	24255	77985	-160673
	380C2F3	0	0	0	24259	77643	-160600
	RTG	0	0	0	9457	28796	-58667
NL3/4	GW / opgw	3479	10540	22151	3479	10540	-22151
Construction/maintenance, +5°C	150C1F1	11729	35812	75529	11729	35812	-75529
Permanent loads yg= 1.2	150C1F2	11729	35771	75535	11729	35771	-75535
Wind angle: 0°	150C1F3	11729	35720	75543	11729	35720	-75543
	380C2F1	0	0	0	23458	71623	-151058
	380C2F2	0	0	0	23458	71542	-151070
	380C2F3	0	0	0	23458	71439	-151087
	RTG	0	0	0	6951	20916	-44251
NL3/1a	GW / opgw	2827	9012	18368	2742	15085	-25102
Wind, 10°C	150C1F1	10418	32662	67342	10184	47987	-82507
Permanent loads yg= 1.2	150C1F2	10419	32560	67321	10207	46350	-80497
Wind angle: 45°	150C1F3	10420	32433	67301	10237	44329	-78071
	380C2F1	0	0	0	20369	95975	-165014
	380C2F2	0	0	0	20414	92699	-160995
	380C2F3	0	0	0	20474	88658	-156142
	RTG	0	0	0	5544	24668	-43215
NL3/1b	GW / opgw	2853	9596	20284	2835	10811	-20956
Wind, -20°C	150C1F1	10518	35580	75471	10479	38680	-76677
Permanent loads yg= 1.2	150C1F2	10518	35554	75476	10484	38359	-76451
Wind angle: 45°	150C1F3	10518	35521	75483	10490	37967	-76196
	380C2F1	0	0	0	20957	77360	-153354
	380C2F2	0	0	0	20968	76719	-152902
	380C2F3	0	0	0	20981	75934	-152392
	RTG	0	0	0	5678	20381	-40729
NL3/3	GW / opgw	4729	14406	29377	4597	23160	-38214
Wind, -5°C	150C1F1	12132	38508	80259	11944	50117	-89948
Permanent loads yg= 1.2	150C1F2	12133	38426	80254	11965	48864	-88552
Wind angle: 45°	150C1F3	12134	38324	80252	11992	47329	-86898
	380C2F1	0	0	0	23888	100234	-179896
	380C2F2	0	0	0	23930	97729	-177104
	380C2F3	0	0	0	23983	94658	-173796
	RTG	0	0	0	9303	38367	-67022
NL3/4	GW / opgw	3480	10471	22160	3467	11568	-22578
Construction/maintenance, +5°C	150C1F1	11730	35623	75563	11699	38554	-76403
Permanent loads yg= 1.2	150C1F2	11730	35598	75570	11703	38257	-76228
Wind angle: 45°	150C1F3	11730	35566	75578	11708	37892	-76032
	380C2F1	0	0	0	23398	77107	-152805
	380C2F2	0	0	0	23406	76513	-152455
	380C2F3	0	0	0	23416	75784	-152064
	RTG	0	0	0	6939	22142	-44504
NL3/1a	GW / opgw	2748	14485	24322	2748	14485	-24322
Wind, 10°C	150C1F1	10206	46433	80599	10206	46433	-80599
Permanent loads yg= 1.2	150C1F2	10228	44944	78803	10228	44944	-78803
Wind angle: 90°	150C1F3	10255	43110	76644	10255	43110	-76644
	380C2F1	0	0	0	20412	92867	-161199
	380C2F2	0	0	0	20455	89888	-157605
	380C2F3	0	0	0	20511	86220	-153287
	RTG	0	0	0	5555	23949	-42351

NL3/1b	GW / opgw	2838	10688	20849	2838	10688	-20849
Wind, -20°C	150C1F1	10484	38376	76462	10484	38376	-76462
Permanent loads yg= 1.2	150C1F2	10488	38086	76271	10488	38086	-76271
Wind angle: 90°	150C1F3	10494	37731	76055	10494	37731	-76055
	380C2F1	0	0	0	20967	76751	-152925
	380C2F2	0	0	0	20977	76172	-152542
	380C2F3	0	0	0	20988	75463	-152111
	RTG	0	0	0	5680	20243	-40640
NL3/3	GW / opgw	4607	22301	37171	4607	22301	-37171
Wind, -5°C	150C1F1	11964	48928	88622	11964	48928	-88622
Permanent loads yg= 1.2	150C1F2	11984	47795	87393	11984	47795	-87393
Wind angle: 90°	150C1F3	12008	46408	85942	12008	46408	-85942
	380C2F1	0	0	0	23928	97857	-177245
	380C2F2	0	0	0	23967	95591	-174786
	380C2F3	0	0	0	24016	92816	-171885
	RTG	0	0	0	9319	37342	-65889
NL3/4	GW / opgw	3469	11461	22503	3469	11461	-22503
Construction/maintenance, +5°C	150C1F1	11703	38272	76236	11703	38272	-76236
Permanent loads yg= 1.2	150C1F2	11707	38003	76089	11707	38003	-76089
Wind angle: 90°	150C1F3	11711	37672	75926	11711	37672	-75926
	380C2F1	0	0	0	23406	76544	-152472
	380C2F2	0	0	0	23413	76006	-152178
	380C2F3	0	0	0	23422	75345	-151852
	RTG	0	0	0	6941	22018	-44447
NL3/1a	GW / opgw	2742	15085	25102	2827	9012	-18368
Wind, 10°C	150C1F1	10184	47987	82507	10418	32662	-67342
Permanent loads yg= 1.2	150C1F2	10207	46350	80497	10419	32560	-67321
Wind angle: -45°	150C1F3	10237	44329	78071	10420	32433	-67301
	380C2F1	0	0	0	20836	65324	-134685
	380C2F2	0	0	0	20838	65119	-134643
	380C2F3	0	0	0	20840	64865	-134602
	RTG	0	0	0	5650	17664	-36599
NL3/1b	GW / opgw	2835	10811	20956	2853	9596	-20284
Wind, -20°C	150C1F1	10479	38680	76677	10518	35580	-75471
Permanent loads yg= 1.2	150C1F2	10484	38359	76451	10518	35554	-75476
Wind angle: -45°	150C1F3	10490	37967	76196	10518	35521	-75483
	380C2F1	0	0	0	21036	71160	-150941
	380C2F2	0	0	0	21036	71108	-150952
	380C2F3	0	0	0	21037	71042	-150966
	RTG	0	0	0	5694	18958	-40261
NL3/3	GW / opgw	4597	23160	38214	4729	14406	-29377
Wind, -5°C	150C1F1	11944	50117	89948	12132	38508	-80259
Permanent loads yg= 1.2	150C1F2	11965	48864	88552	12133	38426	-80254
Wind angle: -45°	150C1F3	11992	47329	86898	12134	38324	-80252
	380C2F1	0	0	0	24264	77016	-160518
	380C2F2	0	0	0	24266	76852	-160508
	380C2F3	0	0	0	24267	76647	-160503
	RTG	0	0	0	9463	28250	-58562
NL3/4	GW / opgw	3467	11568	22578	3480	10471	-22160
Construction/maintenance, +5°C	150C1F1	11699	38554	76403	11730	35623	-75563
Permanent loads yg= 1.2	150C1F2	11703	38257	76228	11730	35598	-75570
Wind angle: -45°	150C1F3	11708	37892	76032	11730	35566	-75578
	380C2F1	0	0	0	23459	71247	-151127
	380C2F2	0	0	0	23459	71196	-151139
	380C2F3	0	0	0	23459	71131	-151156
	RTG	0	0	0	6951	20828	-44272
NL3/1a	GW / opgw	2120	7522	14666	2120	7522	-14666
Wind, 10°C	150C1F1	7824	26822	53396	7824	26822	-53396
Permanent loads yg= 0.9	150C1F2	7827	26621	53267	7827	26621	-53267
Wind angle: 0°	150C1F3	7830	26374	53123	7830	26374	-53123
	380C2F1	0	0	0	15647	53644	-106791
	380C2F2	0	0	0	15653	53241	-106534
	380C2F3	0	0	0	15660	52747	-106246
	RTG	0	0	0	4243	14340	-28794
NL3/1b	GW / opgw	2148	7686	16032	2148	7686	-16032
Wind, -20°C	150C1F1	7927	28583	60029	7927	28583	-60029
Permanent loads yg= 0.9	150C1F2	7927	28539	60027	7927	28539	-60027
Wind angle: 0°	150C1F3	7928	28483	60026	7928	28483	-60026
	380C2F1	0	0	0	15854	57167	-120058
	380C2F2	0	0	0	15855	57078	-120053
	380C2F3	0	0	0	15855	56966	-120052
	RTG	0	0	0	4288	15085	-31748

NL3/3	GW / opgw	4025	13257	26116	4025	13257	-26116
Wind, -5°C	150C1F1	9545	32523	66201	9545	32523	-66201
Permanent loads yg= 0.9	150C1F2	9547	32371	66137	9547	32371	-66137
Wind angle: 0°	150C1F3	9550	32184	66067	9550	32184	-66067
	380C2F1	0	0	0	19091	65045	-132402
	380C2F2	0	0	0	19095	64742	-132273
	380C2F3	0	0	0	19099	64368	-132134
	RTG	0	0	0	8065	25516	-51634
NL3/4	GW / opgw	2780	8747	18308	2780	8747	-18308
Construction/maintenance, +5°C	150C1F1	9152	29172	61291	9152	29172	-61291
Permanent loads yg= 0.9	150C1F2	9152	29130	61293	9152	29130	-61293
Wind angle: 0°	150C1F3	9152	29076	61297	9152	29076	-61297
	380C2F1	0	0	0	18304	58345	-122583
	380C2F2	0	0	0	18304	58259	-122586
	380C2F3	0	0	0	18305	58152	-122594
	RTG	0	0	0	5554	17325	-36551
NL3/1a	GW / opgw	2125	7168	14412	2040	14095	-22981
Wind, 10°C	150C1F1	7835	25931	52908	7585	43658	-73225
Permanent loads yg= 0.9	150C1F2	7837	25818	52864	7606	41809	-70763
Wind angle: 45°	150C1F3	7838	25678	52816	7633	39507	-67734
	380C2F1	0	0	0	15171	87315	-146450
	380C2F2	0	0	0	15211	83618	-141526
	380C2F3	0	0	0	15265	79015	-135468
	RTG	0	0	0	4132	22062	-37629
NL3/1b	GW / opgw	2149	7610	16024	2127	9013	-17100
Wind, -20°C	150C1F1	7928	28380	60031	7875	31907	-62155
Permanent loads yg= 0.9	150C1F2	7928	28353	60033	7882	31529	-61805
Wind angle: 45°	150C1F3	7929	28319	60038	7891	31068	-61403
	380C2F1	0	0	0	15751	63815	-124310
	380C2F2	0	0	0	15765	63059	-123611
	380C2F3	0	0	0	15782	62137	-122806
	RTG	0	0	0	4267	16594	-32608
NL3/3	GW / opgw	4032	12765	25858	3897	22219	-36198
Wind, -5°C	150C1F1	9553	31845	65971	9338	45069	-79125
Permanent loads yg= 0.9	150C1F2	9554	31757	65953	9360	43645	-77361
Wind angle: 45°	150C1F3	9555	31648	65936	9388	41891	-75239
	380C2F1	0	0	0	18676	90137	-158249
	380C2F2	0	0	0	18720	87290	-154723
	380C2F3	0	0	0	18776	83782	-150478
	RTG	0	0	0	7898	35935	-61809
NL3/4	GW / opgw	2780	8676	18311	2765	9882	-18963
Construction/maintenance, +5°C	150C1F1	9153	28977	61309	9113	32205	-62790
Permanent loads yg= 0.9	150C1F2	9153	28950	61314	9119	31867	-62527
Wind angle: 45°	150C1F3	9153	28917	61320	9125	31454	-62228
	380C2F1	0	0	0	18227	64410	-125579
	380C2F2	0	0	0	18237	63735	-125054
	380C2F3	0	0	0	18250	62909	-124455
	RTG	0	0	0	5540	18651	-37018
NL3/1a	GW / opgw	2045	13438	22076	2045	13438	-22076
Wind, 10°C	150C1F1	7604	41904	70889	7604	41904	-70889
Permanent loads yg= 0.9	150C1F2	7624	40210	68654	7624	40210	-68654
Wind angle: 90°	150C1F3	7651	38107	65918	7651	38107	-65918
	380C2F1	0	0	0	15209	83808	-141777
	380C2F2	0	0	0	15248	80421	-137308
	380C2F3	0	0	0	15301	76215	-131837
	RTG	0	0	0	4142	21241	-36544
NL3/1b	GW / opgw	2129	8867	16944	2129	8867	-16944
Wind, -20°C	150C1F1	7882	31549	61823	7882	31549	-61823
Permanent loads yg= 0.9	150C1F2	7888	31208	61522	7888	31208	-61522
Wind angle: 90°	150C1F3	7896	30793	61177	7896	30793	-61177
	380C2F1	0	0	0	15764	63097	-123645
	380C2F2	0	0	0	15777	62416	-123044
	380C2F3	0	0	0	15791	61586	-122354
	RTG	0	0	0	4270	16432	-32469
NL3/3	GW / opgw	3906	21309	35045	3906	21309	-35045
Wind, -5°C	150C1F1	9359	43718	77451	9359	43718	-77451
Permanent loads yg= 0.9	150C1F2	9379	42424	75878	9379	42424	-75878
Wind angle: 90°	150C1F3	9405	40835	73994	9405	40835	-73994
	380C2F1	0	0	0	18717	87435	-154901
	380C2F2	0	0	0	18758	84849	-151756
	380C2F3	0	0	0	18811	81670	-147987
	RTG	0	0	0	7915	34825	-60492

NL3/4	GW / opgw	2767	9761	18859	2767	9761	-18859
Construction/maintenance, +5°C	150C1F1	9118	31885	62540	9118	31885	-62540
Permanent loads yg= 0.9	150C1F2	9123	31580	62316	9123	31580	-62316
Wind angle: 90°	150C1F3	9129	31207	62061	9129	31207	-62061
	380C2F1	0	0	0	18237	63769	-125080
	380C2F2	0	0	0	18246	63159	-124631
	380C2F3	0	0	0	18257	62413	-124123
	RTG	0	0	0	5542	18514	-36932
NL3/1a	GW / opgw	2040	14095	22981	2125	7168	-14412
Wind, 10°C	150C1F1	7585	43658	73225	7835	25931	-52908
Permanent loads yg= 0.9	150C1F2	7606	41809	70763	7837	25818	-52864
Wind angle: -45°	150C1F3	7633	39507	67734	7838	25678	-52816
	380C2F1	0	0	0	15671	51862	-105817
	380C2F2	0	0	0	15673	51636	-105728
	380C2F3	0	0	0	15676	51356	-105633
	RTG	0	0	0	4248	13934	-28600
NL3/1b	GW / opgw	2127	9013	17100	2149	7610	-16024
Wind, -20°C	150C1F1	7875	31907	62155	7928	28380	-60031
Permanent loads yg= 0.9	150C1F2	7882	31529	61805	7928	28353	-60033
Wind angle: -45°	150C1F3	7891	31068	61403	7929	28319	-60038
	380C2F1	0	0	0	15857	56760	-120061
	380C2F2	0	0	0	15857	56706	-120067
	380C2F3	0	0	0	15857	56637	-120075
	RTG	0	0	0	4289	14991	-31753
NL3/3	GW / opgw	3897	22219	36198	4032	12765	-25858
Wind, -5°C	150C1F1	9338	45069	79125	9553	31845	-65971
Permanent loads yg= 0.9	150C1F2	9360	43645	77361	9554	31757	-65953
Wind angle: -45°	150C1F3	9388	41891	75239	9555	31648	-65936
	380C2F1	0	0	0	19106	63690	-131942
	380C2F2	0	0	0	19108	63515	-131907
	380C2F3	0	0	0	19110	63296	-131873
	RTG	0	0	0	8072	24939	-51462
NL3/4	GW / opgw	2765	9882	18963	2780	8676	-18311
Construction/maintenance, +5°C	150C1F1	9113	32205	62790	9153	28977	-61309
Permanent loads yg= 0.9	150C1F2	9119	31867	62527	9153	28950	-61314
Wind angle: -45°	150C1F3	9125	31454	62228	9153	28917	-61320
	380C2F1	0	0	0	18306	57953	-122619
	380C2F2	0	0	0	18306	57901	-122628
	380C2F3	0	0	0	18306	57834	-122641
	RTG	0	0	0	5554	17235	-36566

ZWW4HL450+5

Loadcases for tower strength (Special limit state)

		Ahead			Back		
Loadcase according to 50341-3-15	Att. Point	Vertical [N]	Transversal [N]	Longitudinal [N]	Vertical [N]	Transversal [N]	Longitudinal [N]
NL3/1a	GW / opgw	2823	9321	18524	0	0	0
Wind, 10°C	150C1F1	10409	33452	67613	0	0	0
Permanent loads yg= 1.2	150C1F2	10412	33276	67538	0	0	0
Wind angle: 0°	150C1F3	10414	33057	67456	0	0	0
	380C2F1	20819	66905	135227	20819	66905	-135227
	380C2F2	20823	66551	135076	20823	66551	-135076
	380C2F3	20828	66115	134911	20828	66115	-134911
	RTG	0	0	0	5646	18028	-36702
NL3/1b	GW / opgw	2852	9668	20282	0	0	0
Wind, -20°C	150C1F1	10517	35772	75445	0	0	0
Permanent loads yg= 1.2	150C1F2	10517	35730	75449	0	0	0
Wind angle: 0°	150C1F3	10518	35678	75455	0	0	0
	380C2F1	21034	71545	150891	21034	71545	-150891
	380C2F2	21035	71461	150898	21035	71461	-150898
	380C2F3	21035	71356	150910	21035	71356	-150910
	RTG	0	0	0	5694	19048	-40247
NL3/3	GW / opgw	4723	14865	29563	0	0	0
Wind, -5°C	150C1F1	12126	39131	80372	0	0	0
Permanent loads yg= 1.2	150C1F2	12128	38993	80336	0	0	0
Wind angle: 0°	150C1F3	12129	38821	80300	0	0	0
	380C2F1	24253	78262	160743	24253	78262	-160743
	380C2F2	24255	77985	160673	24255	77985	-160673
	380C2F3	24259	77643	160600	24259	77643	-160600
	RTG	0	0	0	9457	28796	-58667
NL3/4	GW / opgw	3479	10540	22151	0	0	0
Construction/maintenance, +5°C	150C1F1	11729	35812	75529	0	0	0
Permanent loads yg= 1.2	150C1F2	11729	35771	75535	0	0	0
Wind angle: 0°	150C1F3	11729	35720	75543	0	0	0
	380C2F1	23458	71623	151058	23458	71623	-151058
	380C2F2	23458	71542	151070	23458	71542	-151070
	380C2F3	23458	71439	151087	23458	71439	-151087
	RTG	0	0	0	6951	20916	-44251
NL3/1a	GW / opgw	2827	9012	18368	0	0	0
Wind, 10°C	150C1F1	10418	32662	67342	0	0	0
Permanent loads yg= 1.2	150C1F2	10419	32560	67321	0	0	0
Wind angle: 45°	150C1F3	10420	32433	67301	0	0	0
	380C2F1	20836	65324	134685	20369	95975	-165014
	380C2F2	20838	65119	134643	20414	92699	-160995
	380C2F3	20840	64865	134602	20474	88658	-156142
	RTG	0	0	0	5544	24668	-43215
NL3/1b	GW / opgw	2853	9596	20284	0	0	0
Wind, -20°C	150C1F1	10518	35580	75471	0	0	0
Permanent loads yg= 1.2	150C1F2	10518	35554	75476	0	0	0
Wind angle: 45°	150C1F3	10518	35521	75483	0	0	0
	380C2F1	21036	71160	150941	20957	77360	-153354
	380C2F2	21036	71108	150952	20968	76719	-152902
	380C2F3	21037	71042	150966	20981	75934	-152392
	RTG	0	0	0	5678	20381	-40729
NL3/3	GW / opgw	4729	14406	29377	0	0	0
Wind, -5°C	150C1F1	12132	38508	80259	0	0	0
Permanent loads yg= 1.2	150C1F2	12133	38426	80254	0	0	0
Wind angle: 45°	150C1F3	12134	38324	80252	0	0	0
	380C2F1	24264	77016	160518	23888	100234	-179896
	380C2F2	24266	76852	160508	23930	97729	-177104
	380C2F3	24267	76647	160503	23983	94658	-173796
	RTG	0	0	0	9303	38367	-67022
NL3/4	GW / opgw	3480	10471	22160	0	0	0
Construction/maintenance, +5°C	150C1F1	11730	35623	75563	0	0	0
Permanent loads yg= 1.2	150C1F2	11730	35598	75570	0	0	0
Wind angle: 45°	150C1F3	11730	35566	75578	0	0	0
	380C2F1	23459	71247	151127	23398	77107	-152805
	380C2F2	23459	71196	151139	23406	76513	-152455
	380C2F3	23459	71131	151156	23416	75784	-152064
	RTG	0	0	0	6939	22142	-44504
NL3/1a	GW / opgw	2748	14485	24322	0	0	0
Wind, 10°C	150C1F1	10206	46433	80599	0	0	0
Permanent loads yg= 1.2	150C1F2	10228	44944	78803	0	0	0
Wind angle: 90°	150C1F3	10255	43110	76644	0	0	0
	380C2F1	20412	92867	161199	20412	92867	-161199
	380C2F2	20455	89888	157605	20455	89888	-157605
	380C2F3	20511	86220	153287	20511	86220	-153287
	RTG	0	0	0	5555	23949	-42351

NL3/1b	GW / opgw	2838	10688	20849	0	0	0
Wind, -20°C	150C1F1	10484	38376	76462	0	0	0
Permanent loads yg= 1.2	150C1F2	10488	38086	76271	0	0	0
Wind angle: 90°	150C1F3	10494	37731	76055	0	0	0
	380C2F1	20967	76751	152925	20967	76751	-152925
	380C2F2	20977	76172	152542	20977	76172	-152542
	380C2F3	20988	75463	152111	20988	75463	-152111
	RTG	0	0	0	5680	20243	-40640
NL3/3	GW / opgw	4607	22301	37171	0	0	0
Wind, -5°C	150C1F1	11964	48928	88622	0	0	0
Permanent loads yg= 1.2	150C1F2	11984	47795	87393	0	0	0
Wind angle: 90°	150C1F3	12008	46408	85942	0	0	0
	380C2F1	23928	97857	177245	23928	97857	-177245
	380C2F2	23967	95591	174786	23967	95591	-174786
	380C2F3	24016	92816	171885	24016	92816	-171885
	RTG	0	0	0	9319	37342	-65889
NL3/4	GW / opgw	3469	11461	22503	0	0	0
Construction/maintenance, +5°C	150C1F1	11703	38272	76236	0	0	0
Permanent loads yg= 1.2	150C1F2	11707	38003	76089	0	0	0
Wind angle: 90°	150C1F3	11711	37672	75926	0	0	0
	380C2F1	23406	76544	152472	23406	76544	-152472
	380C2F2	23413	76006	152178	23413	76006	-152178
	380C2F3	23422	75345	151852	23422	75345	-151852
	RTG	0	0	0	6941	22018	-44447
NL3/1a	GW / opgw	2742	15085	25102	0	0	0
Wind, 10°C	150C1F1	10184	47987	82507	0	0	0
Permanent loads yg= 1.2	150C1F2	10207	46350	80497	0	0	0
Wind angle: -45°	150C1F3	10237	44329	78071	0	0	0
	380C2F1	20369	95975	165014	20836	65324	-134685
	380C2F2	20414	92699	160995	20838	65119	-134643
	380C2F3	20474	88658	156142	20840	64865	-134602
	RTG	0	0	0	5650	17664	-36599
NL3/1b	GW / opgw	2835	10811	20956	0	0	0
Wind, -20°C	150C1F1	10479	38680	76677	0	0	0
Permanent loads yg= 1.2	150C1F2	10484	38359	76451	0	0	0
Wind angle: -45°	150C1F3	10490	37967	76196	0	0	0
	380C2F1	20957	77360	153354	21036	71160	-150941
	380C2F2	20968	76719	152902	21036	71108	-150952
	380C2F3	20981	75934	152392	21037	71042	-150966
	RTG	0	0	0	5694	18958	-40261
NL3/3	GW / opgw	4597	23160	38214	0	0	0
Wind, -5°C	150C1F1	11944	50117	89948	0	0	0
Permanent loads yg= 1.2	150C1F2	11965	48864	88552	0	0	0
Wind angle: -45°	150C1F3	11992	47329	86898	0	0	0
	380C2F1	23888	100234	179896	24264	77016	-160518
	380C2F2	23930	97729	177104	24266	76852	-160508
	380C2F3	23983	94658	173796	24267	76647	-160503
	RTG	0	0	0	9463	28250	-58562
NL3/4	GW / opgw	3467	11568	22578	0	0	0
Construction/maintenance, +5°C	150C1F1	11699	38554	76403	0	0	0
Permanent loads yg= 1.2	150C1F2	11703	38257	76228	0	0	0
Wind angle: -45°	150C1F3	11708	37892	76032	0	0	0
	380C2F1	23398	77107	152805	23459	71247	-151127
	380C2F2	23406	76513	152455	23459	71196	-151139
	380C2F3	23416	75784	152064	23459	71131	-151156
	RTG	0	0	0	6951	20828	-44272
NL3/1a	GW / opgw	2120	7522	14666	0	0	0
Wind, 10°C	150C1F1	7824	26822	53396	0	0	0
Permanent loads yg= 0.9	150C1F2	7827	26621	53267	0	0	0
Wind angle: 0°	150C1F3	7830	26374	53123	0	0	0
	380C2F1	15647	53644	106791	15647	53644	-106791
	380C2F2	15653	53241	106534	15653	53241	-106534
	380C2F3	15660	52747	106246	15660	52747	-106246
	RTG	0	0	0	4243	14340	-28794
NL3/1b	GW / opgw	2148	7686	16032	0	0	0
Wind, -20°C	150C1F1	7927	28583	60029	0	0	0
Permanent loads yg= 0.9	150C1F2	7927	28539	60027	0	0	0
Wind angle: 0°	150C1F3	7928	28483	60026	0	0	0
	380C2F1	15854	57167	120058	15854	57167	-120058
	380C2F2	15855	57078	120053	15855	57078	-120053
	380C2F3	15855	56966	120052	15855	56966	-120052
	RTG	0	0	0	4288	15085	-31748

NL3/3	GW / opgw	4025	13257	26116	0	0	0
Wind, -5°C	150C1F1	9545	32523	66201	0	0	0
Permanent loads yg= 0.9	150C1F2	9547	32371	66137	0	0	0
Wind angle: 0°	150C1F3	9550	32184	66067	0	0	0
	380C2F1	19091	65045	132402	19091	65045	-132402
	380C2F2	19095	64742	132273	19095	64742	-132273
	380C2F3	19099	64368	132134	19099	64368	-132134
	RTG	0	0	0	8065	25516	-51634
NL3/4	GW / opgw	2780	8747	18308	0	0	0
Construction/maintenance, +5°C	150C1F1	9152	29172	61291	0	0	0
Permanent loads yg= 0.9	150C1F2	9152	29130	61293	0	0	0
Wind angle: 0°	150C1F3	9152	29076	61297	0	0	0
	380C2F1	18304	58345	122583	18304	58345	-122583
	380C2F2	18304	58259	122586	18304	58259	-122586
	380C2F3	18305	58152	122594	18305	58152	-122594
	RTG	0	0	0	5554	17325	-36551
NL3/1a	GW / opgw	2125	7168	14412	0	0	0
Wind, 10°C	150C1F1	7835	25931	52908	0	0	0
Permanent loads yg= 0.9	150C1F2	7837	25818	52864	0	0	0
Wind angle: 45°	150C1F3	7838	25678	52816	0	0	0
	380C2F1	15671	51862	105817	15171	87315	-146450
	380C2F2	15673	51636	105728	15211	83618	-141526
	380C2F3	15676	51356	105633	15265	79015	-135468
	RTG	0	0	0	4132	22062	-37629
NL3/1b	GW / opgw	2149	7610	16024	0	0	0
Wind, -20°C	150C1F1	7928	28380	60031	0	0	0
Permanent loads yg= 0.9	150C1F2	7928	28353	60033	0	0	0
Wind angle: 45°	150C1F3	7929	28319	60038	0	0	0
	380C2F1	15857	56760	120061	15751	63815	-124310
	380C2F2	15857	56706	120067	15765	63059	-123611
	380C2F3	15857	56637	120075	15782	62137	-122806
	RTG	0	0	0	4267	16594	-32608
NL3/3	GW / opgw	4032	12765	25858	0	0	0
Wind, -5°C	150C1F1	9553	31845	65971	0	0	0
Permanent loads yg= 0.9	150C1F2	9554	31757	65953	0	0	0
Wind angle: 45°	150C1F3	9555	31648	65936	0	0	0
	380C2F1	19106	63690	131942	18676	90137	-158249
	380C2F2	19108	63515	131907	18720	87290	-154723
	380C2F3	19110	63296	131873	18776	83782	-150478
	RTG	0	0	0	7898	35935	-61809
NL3/4	GW / opgw	2780	8676	18311	0	0	0
Construction/maintenance, +5°C	150C1F1	9153	28977	61309	0	0	0
Permanent loads yg= 0.9	150C1F2	9153	28950	61314	0	0	0
Wind angle: 45°	150C1F3	9153	28917	61320	0	0	0
	380C2F1	18306	57953	122619	18227	64410	-125579
	380C2F2	18306	57901	122628	18237	63735	-125054
	380C2F3	18306	57834	122641	18250	62909	-124455
	RTG	0	0	0	5540	18651	-37018
NL3/1a	GW / opgw	2045	13438	22076	0	0	0
Wind, 10°C	150C1F1	7604	41904	70889	0	0	0
Permanent loads yg= 0.9	150C1F2	7624	40210	68654	0	0	0
Wind angle: 90°	150C1F3	7651	38107	65918	0	0	0
	380C2F1	15209	83808	141777	15209	83808	-141777
	380C2F2	15248	80421	137308	15248	80421	-137308
	380C2F3	15301	76215	131837	15301	76215	-131837
	RTG	0	0	0	4142	21241	-36544
NL3/1b	GW / opgw	2129	8867	16944	0	0	0
Wind, -20°C	150C1F1	7882	31549	61823	0	0	0
Permanent loads yg= 0.9	150C1F2	7888	31208	61522	0	0	0
Wind angle: 90°	150C1F3	7896	30793	61177	0	0	0
	380C2F1	15764	63097	123645	15764	63097	-123645
	380C2F2	15777	62416	123044	15777	62416	-123044
	380C2F3	15791	61586	122354	15791	61586	-122354
	RTG	0	0	0	4270	16432	-32469
NL3/3	GW / opgw	3906	21309	35045	0	0	0
Wind, -5°C	150C1F1	9359	43718	77451	0	0	0
Permanent loads yg= 0.9	150C1F2	9379	42424	75878	0	0	0
Wind angle: 90°	150C1F3	9405	40835	73994	0	0	0
	380C2F1	18717	87435	154901	18717	87435	-154901
	380C2F2	18758	84849	151756	18758	84849	-151756
	380C2F3	18811	81670	147987	18811	81670	-147987
	RTG	0	0	0	7915	34825	-60492

NL3/4	GW / opgw	2767	9761	18859	0	0	0
Construction/maintenance, +5°C	150C1F1	9118	31885	62540	0	0	0
Permanent loads yg= 0.9	150C1F2	9123	31580	62316	0	0	0
Wind angle: 90°	150C1F3	9129	31207	62061	0	0	0
	380C2F1	18237	63769	125080	18237	63769	-125080
	380C2F2	18246	63159	124631	18246	63159	-124631
	380C2F3	18257	62413	124123	18257	62413	-124123
	RTG	0	0	0	5542	18514	-36932
NL3/1a	GW / opgw	2040	14095	22981	0	0	0
Wind, 10°C	150C1F1	7585	43658	73225	0	0	0
Permanent loads yg= 0.9	150C1F2	7606	41809	70763	0	0	0
Wind angle: -45°	150C1F3	7633	39507	67734	0	0	0
	380C2F1	15171	87315	146450	15671	51862	-105817
	380C2F2	15211	83618	141526	15673	51636	-105728
	380C2F3	15265	79015	135468	15676	51356	-105633
	RTG	0	0	0	4248	13934	-28600
NL3/1b	GW / opgw	2127	9013	17100	0	0	0
Wind, -20°C	150C1F1	7875	31907	62155	0	0	0
Permanent loads yg= 0.9	150C1F2	7882	31529	61805	0	0	0
Wind angle: -45°	150C1F3	7891	31068	61403	0	0	0
	380C2F1	15751	63815	124310	15857	56760	-120061
	380C2F2	15765	63059	123611	15857	56706	-120067
	380C2F3	15782	62137	122806	15857	56637	-120075
	RTG	0	0	0	4289	14991	-31753
NL3/3	GW / opgw	3897	22219	36198	0	0	0
Wind, -5°C	150C1F1	9338	45069	79125	0	0	0
Permanent loads yg= 0.9	150C1F2	9360	43645	77361	0	0	0
Wind angle: -45°	150C1F3	9388	41891	75239	0	0	0
	380C2F1	18676	90137	158249	19106	63690	-131942
	380C2F2	18720	87290	154723	19108	63515	-131907
	380C2F3	18776	83782	150478	19110	63296	-131873
	RTG	0	0	0	8072	24939	-51462
NL3/4	GW / opgw	2765	9882	18963	0	0	0
Construction/maintenance, +5°C	150C1F1	9113	32205	62790	0	0	0
Permanent loads yg= 0.9	150C1F2	9119	31867	62527	0	0	0
Wind angle: -45°	150C1F3	9125	31454	62228	0	0	0
	380C2F1	18227	64410	125579	18306	57953	-122619
	380C2F2	18237	63735	125054	18306	57901	-122628
	380C2F3	18250	62909	124455	18306	57834	-122641
	RTG	0	0	0	5554	17235	-36566

ZWW4HL450+5

Loadcases for tower strength (Special limit state)

		Ahead			Back		
Loadcase according to 50341-3-15	Att. Point	Vertical [N]	Transversal [N]	Longitudinal [N]	Vertical [N]	Transversal [N]	Longitudinal [N]
NL3/1a	GW / opgw	2823	9321	18524	2823	9321	-18524
Wind, 10°C	150C1F1	10409	33452	67613	10409	33452	-67613
Permanent loads yg= 1.2	150C1F2	10412	33276	67538	10412	33276	-67538
Wind angle: 0°	150C1F3	10414	33057	67456	10414	33057	-67456
	380C2F1	20819	66905	135227	20819	66905	-135227
	380C2F2	20823	66551	135076	20823	66551	-135076
	380C2F3	20828	66115	134911	20828	66115	-134911
	RTG	0	0	0	5646	18028	-36702
NL3/1b	GW / opgw	2852	9668	20282	2852	9668	-20282
Wind, -20°C	150C1F1	10517	35772	75445	10517	35772	-75445
Permanent loads yg= 1.2	150C1F2	10517	35730	75449	10517	35730	-75449
Wind angle: 0°	150C1F3	10518	35678	75455	10518	35678	-75455
	380C2F1	21034	71545	150891	21034	71545	-150891
	380C2F2	21035	71461	150898	21035	71461	-150898
	380C2F3	21035	71356	150910	21035	71356	-150910
	RTG	0	0	0	5694	19048	-40247
NL3/3	GW / opgw	4723	14865	29563	4723	14865	-29563
Wind, -5°C	150C1F1	12126	39131	80372	12126	39131	-80372
Permanent loads yg= 1.2	150C1F2	12128	38993	80336	12128	38993	-80336
Wind angle: 0°	150C1F3	12129	38821	80300	12129	38821	-80300
	380C2F1	24253	78262	160743	24253	78262	-160743
	380C2F2	24255	77985	160673	24255	77985	-160673
	380C2F3	24259	77643	160600	24259	77643	-160600
	RTG	0	0	0	9457	28796	-58667
NL3/4	GW / opgw	3479	10540	22151	3479	10540	-22151
Construction/maintenance, +5°C	150C1F1	11729	35812	75529	11729	35812	-75529
Permanent loads yg= 1.2	150C1F2	11729	35771	75535	11729	35771	-75535
Wind angle: 0°	150C1F3	11729	35720	75543	11729	35720	-75543
	380C2F1	23458	71623	151058	23458	71623	-151058
	380C2F2	23458	71542	151070	23458	71542	-151070
	380C2F3	23458	71439	151087	23458	71439	-151087
	RTG	0	0	0	6951	20916	-44251
NL3/1a	GW / opgw	2827	9012	18368	2742	15085	-25102
Wind, 10°C	150C1F1	10418	32662	67342	10184	47987	-82507
Permanent loads yg= 1.2	150C1F2	10419	32560	67321	10207	46350	-80497
Wind angle: 45°	150C1F3	10420	32433	67301	10237	44329	-78071
	380C2F1	20836	65324	134685	20369	95975	-165014
	380C2F2	20838	65119	134643	20414	92699	-160995
	380C2F3	20840	64865	134602	20474	88658	-156142
	RTG	0	0	0	5544	24668	-43215
NL3/1b	GW / opgw	2853	9596	20284	2835	10811	-20956
Wind, -20°C	150C1F1	10518	35580	75471	10479	38680	-76677
Permanent loads yg= 1.2	150C1F2	10518	35554	75476	10484	38359	-76451
Wind angle: 45°	150C1F3	10518	35521	75483	10490	37967	-76196
	380C2F1	21036	71160	150941	20957	77360	-153354
	380C2F2	21036	71108	150952	20968	76719	-152902
	380C2F3	21037	71042	150966	20981	75934	-152392
	RTG	0	0	0	5678	20381	-40729
NL3/3	GW / opgw	4729	14406	29377	4597	23160	-38214
Wind, -5°C	150C1F1	12132	38508	80259	11944	50117	-89948
Permanent loads yg= 1.2	150C1F2	12133	38426	80254	11965	48864	-88552
Wind angle: 45°	150C1F3	12134	38324	80252	11992	47329	-86898
	380C2F1	24264	77016	160518	23888	100234	-179896
	380C2F2	24266	76852	160508	23930	97729	-177104
	380C2F3	24267	76647	160503	23983	94658	-173796
	RTG	0	0	0	9303	38367	-67022
NL3/4	GW / opgw	3480	10471	22160	3467	11568	-22578
Construction/maintenance, +5°C	150C1F1	11730	35623	75563	11699	38554	-76403
Permanent loads yg= 1.2	150C1F2	11730	35598	75570	11703	38257	-76228
Wind angle: 45°	150C1F3	11730	35566	75578	11708	37892	-76032
	380C2F1	23459	71247	151127	23398	77107	-152805
	380C2F2	23459	71196	151139	23406	76513	-152455
	380C2F3	23459	71131	151156	23416	75784	-152064
	RTG	0	0	0	6939	22142	-44504
NL3/1a	GW / opgw	2748	14485	24322	2748	14485	-24322
Wind, 10°C	150C1F1	10206	46433	80599	10206	46433	-80599
Permanent loads yg= 1.2	150C1F2	10228	44944	78803	10228	44944	-78803
Wind angle: 90°	150C1F3	10255	43110	76644	10255	43110	-76644
	380C2F1	20412	92867	161199	20412	92867	-161199
	380C2F2	20455	89888	157605	20455	89888	-157605
	380C2F3	20511	86220	153287	20511	86220	-153287
	RTG	0	0	0	5555	23949	-42351

NL3/1b	GW / opgw	2838	10688	20849	2838	10688	-20849
Wind, -20°C	150C1F1	10484	38376	76462	10484	38376	-76462
Permanent loads yg= 1.2	150C1F2	10488	38086	76271	10488	38086	-76271
Wind angle: 90°	150C1F3	10494	37731	76055	10494	37731	-76055
	380C2F1	20967	76751	152925	20967	76751	-152925
	380C2F2	20977	76172	152542	20977	76172	-152542
	380C2F3	20988	75463	152111	20988	75463	-152111
	RTG	0	0	0	5680	20243	-40640
NL3/3	GW / opgw	4607	22301	37171	4607	22301	-37171
Wind, -5°C	150C1F1	11964	48928	88622	11964	48928	-88622
Permanent loads yg= 1.2	150C1F2	11984	47795	87393	11984	47795	-87393
Wind angle: 90°	150C1F3	12008	46408	85942	12008	46408	-85942
	380C2F1	23928	97857	177245	23928	97857	-177245
	380C2F2	23967	95591	174786	23967	95591	-174786
	380C2F3	24016	92816	171885	24016	92816	-171885
	RTG	0	0	0	9319	37342	-65889
NL3/4	GW / opgw	3469	11461	22503	3469	11461	-22503
Construction/maintenance, +5°C	150C1F1	11703	38272	76236	11703	38272	-76236
Permanent loads yg= 1.2	150C1F2	11707	38003	76089	11707	38003	-76089
Wind angle: 90°	150C1F3	11711	37672	75926	11711	37672	-75926
	380C2F1	23406	76544	152472	23406	76544	-152472
	380C2F2	23413	76006	152178	23413	76006	-152178
	380C2F3	23422	75345	151852	23422	75345	-151852
	RTG	0	0	0	6941	22018	-44447
NL3/1a	GW / opgw	2742	15085	25102	2827	9012	-18368
Wind, 10°C	150C1F1	10184	47987	82507	10418	32662	-67342
Permanent loads yg= 1.2	150C1F2	10207	46350	80497	10419	32560	-67321
Wind angle: -45°	150C1F3	10237	44329	78071	10420	32433	-67301
	380C2F1	20369	95975	165014	20836	65324	-134685
	380C2F2	20414	92699	160995	20838	65119	-134643
	380C2F3	20474	88658	156142	20840	64865	-134602
	RTG	0	0	0	5650	17664	-36599
NL3/1b	GW / opgw	2835	10811	20956	2853	9596	-20284
Wind, -20°C	150C1F1	10479	38680	76677	10518	35580	-75471
Permanent loads yg= 1.2	150C1F2	10484	38359	76451	10518	35554	-75476
Wind angle: -45°	150C1F3	10490	37967	76196	10518	35521	-75483
	380C2F1	20957	77360	153354	21036	71160	-150941
	380C2F2	20968	76719	152902	21036	71108	-150952
	380C2F3	20981	75934	152392	21037	71042	-150966
	RTG	0	0	0	5694	18958	-40261
NL3/3	GW / opgw	4597	23160	38214	4729	14406	-29377
Wind, -5°C	150C1F1	11944	50117	89948	12132	38508	-80259
Permanent loads yg= 1.2	150C1F2	11965	48864	88552	12133	38426	-80254
Wind angle: -45°	150C1F3	11992	47329	86898	12134	38324	-80252
	380C2F1	23888	100234	179896	24264	77016	-160518
	380C2F2	23930	97729	177104	24266	76852	-160508
	380C2F3	23983	94658	173796	24267	76647	-160503
	RTG	0	0	0	9463	28250	-58562
NL3/4	GW / opgw	3467	11568	22578	3480	10471	-22160
Construction/maintenance, +5°C	150C1F1	11699	38554	76403	11730	35623	-75563
Permanent loads yg= 1.2	150C1F2	11703	38257	76228	11730	35598	-75570
Wind angle: -45°	150C1F3	11708	37892	76032	11730	35566	-75578
	380C2F1	23398	77107	152805	23459	71247	-151127
	380C2F2	23406	76513	152455	23459	71196	-151139
	380C2F3	23416	75784	152064	23459	71131	-151156
	RTG	0	0	0	6951	20828	-44272
NL3/1a	GW / opgw	2120	7522	14666	2120	7522	-14666
Wind, 10°C	150C1F1	7824	26822	53396	7824	26822	-53396
Permanent loads yg= 0.9	150C1F2	7827	26621	53267	7827	26621	-53267
Wind angle: 0°	150C1F3	7830	26374	53123	7830	26374	-53123
	380C2F1	15647	53644	106791	15647	53644	-106791
	380C2F2	15653	53241	106534	15653	53241	-106534
	380C2F3	15660	52747	106246	15660	52747	-106246
	RTG	0	0	0	4243	14340	-28794
NL3/1b	GW / opgw	2148	7686	16032	2148	7686	-16032
Wind, -20°C	150C1F1	7927	28583	60029	7927	28583	-60029
Permanent loads yg= 0.9	150C1F2	7927	28539	60027	7927	28539	-60027
Wind angle: 0°	150C1F3	7928	28483	60026	7928	28483	-60026
	380C2F1	15854	57167	120058	15854	57167	-120058
	380C2F2	15855	57078	120053	15855	57078	-120053
	380C2F3	15855	56966	120052	15855	56966	-120052
	RTG	0	0	0	4288	15085	-31748

NL3/3	GW / opgw	4025	13257	26116	4025	13257	-26116
Wind, -5°C	150C1F1	9545	32523	66201	9545	32523	-66201
Permanent loads yg= 0.9	150C1F2	9547	32371	66137	9547	32371	-66137
Wind angle: 0°	150C1F3	9550	32184	66067	9550	32184	-66067
	380C2F1	19091	65045	132402	19091	65045	-132402
	380C2F2	19095	64742	132273	19095	64742	-132273
	380C2F3	19099	64368	132134	19099	64368	-132134
	RTG	0	0	0	8065	25516	-51634
NL3/4	GW / opgw	2780	8747	18308	2780	8747	-18308
Construction/maintenance, +5°C	150C1F1	9152	29172	61291	9152	29172	-61291
Permanent loads yg= 0.9	150C1F2	9152	29130	61293	9152	29130	-61293
Wind angle: 0°	150C1F3	9152	29076	61297	9152	29076	-61297
	380C2F1	18304	58345	122583	18304	58345	-122583
	380C2F2	18304	58259	122586	18304	58259	-122586
	380C2F3	18305	58152	122594	18305	58152	-122594
	RTG	0	0	0	5554	17325	-36551
NL3/1a	GW / opgw	2125	7168	14412	2040	14095	-22981
Wind, 10°C	150C1F1	7835	25931	52908	7585	43658	-73225
Permanent loads yg= 0.9	150C1F2	7837	25818	52864	7606	41809	-70763
Wind angle: 45°	150C1F3	7838	25678	52816	7633	39507	-67734
	380C2F1	15671	51862	105817	15171	87315	-146450
	380C2F2	15673	51636	105728	15211	83618	-141526
	380C2F3	15676	51356	105633	15265	79015	-135468
	RTG	0	0	0	4132	22062	-37629
NL3/1b	GW / opgw	2149	7610	16024	2127	9013	-17100
Wind, -20°C	150C1F1	7928	28380	60031	7875	31907	-62155
Permanent loads yg= 0.9	150C1F2	7928	28353	60033	7882	31529	-61805
Wind angle: 45°	150C1F3	7929	28319	60038	7891	31068	-61403
	380C2F1	15857	56760	120061	15751	63815	-124310
	380C2F2	15857	56706	120067	15765	63059	-123611
	380C2F3	15857	56637	120075	15782	62137	-122806
	RTG	0	0	0	4267	16594	-32608
NL3/3	GW / opgw	4032	12765	25858	3897	22219	-36198
Wind, -5°C	150C1F1	9553	31845	65971	9338	45069	-79125
Permanent loads yg= 0.9	150C1F2	9554	31757	65953	9360	43645	-77361
Wind angle: 45°	150C1F3	9555	31648	65936	9388	41891	-75239
	380C2F1	19106	63690	131942	18676	90137	-158249
	380C2F2	19108	63515	131907	18720	87290	-154723
	380C2F3	19110	63296	131873	18776	83782	-150478
	RTG	0	0	0	7898	35935	-61809
NL3/4	GW / opgw	2780	8676	18311	2765	9882	-18963
Construction/maintenance, +5°C	150C1F1	9153	28977	61309	9113	32205	-62790
Permanent loads yg= 0.9	150C1F2	9153	28950	61314	9119	31867	-62527
Wind angle: 45°	150C1F3	9153	28917	61320	9125	31454	-62228
	380C2F1	18306	57953	122619	18227	64410	-125579
	380C2F2	18306	57901	122628	18237	63735	-125054
	380C2F3	18306	57834	122641	18250	62909	-124455
	RTG	0	0	0	5540	18651	-37018
NL3/1a	GW / opgw	2045	13438	22076	2045	13438	-22076
Wind, 10°C	150C1F1	7604	41904	70889	7604	41904	-70889
Permanent loads yg= 0.9	150C1F2	7624	40210	68654	7624	40210	-68654
Wind angle: 90°	150C1F3	7651	38107	65918	7651	38107	-65918
	380C2F1	15209	83808	141777	15209	83808	-141777
	380C2F2	15248	80421	137308	15248	80421	-137308
	380C2F3	15301	76215	131837	15301	76215	-131837
	RTG	0	0	0	4142	21241	-36544
NL3/1b	GW / opgw	2129	8867	16944	2129	8867	-16944
Wind, -20°C	150C1F1	7882	31549	61823	7882	31549	-61823
Permanent loads yg= 0.9	150C1F2	7888	31208	61522	7888	31208	-61522
Wind angle: 90°	150C1F3	7896	30793	61177	7896	30793	-61177
	380C2F1	15764	63097	123645	15764	63097	-123645
	380C2F2	15777	62416	123044	15777	62416	-123044
	380C2F3	15791	61586	122354	15791	61586	-122354
	RTG	0	0	0	4270	16432	-32469
NL3/3	GW / opgw	3906	21309	35045	3906	21309	-35045
Wind, -5°C	150C1F1	9359	43718	77451	9359	43718	-77451
Permanent loads yg= 0.9	150C1F2	9379	42424	75878	9379	42424	-75878
Wind angle: 90°	150C1F3	9405	40835	73994	9405	40835	-73994
	380C2F1	18717	87435	154901	18717	87435	-154901
	380C2F2	18758	84849	151756	18758	84849	-151756
	380C2F3	18811	81670	147987	18811	81670	-147987
	RTG	0	0	0	7915	34825	-60492

NL3/4	GW / opgw	2767	9761	18859	2767	9761	-18859
Construction/maintenance, +5°C	150C1F1	9118	31885	62540	9118	31885	-62540
Permanent loads yg= 0.9	150C1F2	9123	31580	62316	9123	31580	-62316
Wind angle: 90°	150C1F3	9129	31207	62061	9129	31207	-62061
	380C2F1	18237	63769	125080	18237	63769	-125080
	380C2F2	18246	63159	124631	18246	63159	-124631
	380C2F3	18257	62413	124123	18257	62413	-124123
	RTG	0	0	0	5542	18514	-36932
NL3/1a	GW / opgw	2040	14095	22981	2125	7168	-14412
Wind, 10°C	150C1F1	7585	43658	73225	7835	25931	-52908
Permanent loads yg= 0.9	150C1F2	7606	41809	70763	7837	25818	-52864
Wind angle: -45°	150C1F3	7633	39507	67734	7838	25678	-52816
	380C2F1	15171	87315	146450	15671	51862	-105817
	380C2F2	15211	83618	141526	15673	51636	-105728
	380C2F3	15265	79015	135468	15676	51356	-105633
	RTG	0	0	0	4248	13934	-28600
NL3/1b	GW / opgw	2127	9013	17100	2149	7610	-16024
Wind, -20°C	150C1F1	7875	31907	62155	7928	28380	-60031
Permanent loads yg= 0.9	150C1F2	7882	31529	61805	7928	28353	-60033
Wind angle: -45°	150C1F3	7891	31068	61403	7929	28319	-60038
	380C2F1	15751	63815	124310	15857	56760	-120061
	380C2F2	15765	63059	123611	15857	56706	-120067
	380C2F3	15782	62137	122806	15857	56637	-120075
	RTG	0	0	0	4289	14991	-31753
NL3/3	GW / opgw	3897	22219	36198	4032	12765	-25858
Wind, -5°C	150C1F1	9338	45069	79125	9553	31845	-65971
Permanent loads yg= 0.9	150C1F2	9360	43645	77361	9554	31757	-65953
Wind angle: -45°	150C1F3	9388	41891	75239	9555	31648	-65936
	380C2F1	18676	90137	158249	19106	63690	-131942
	380C2F2	18720	87290	154723	19108	63515	-131907
	380C2F3	18776	83782	150478	19110	63296	-131873
	RTG	0	0	0	8072	24939	-51462
NL3/4	GW / opgw	2765	9882	18963	2780	8676	-18311
Construction/maintenance, +5°C	150C1F1	9113	32205	62790	9153	28977	-61309
Permanent loads yg= 0.9	150C1F2	9119	31867	62527	9153	28950	-61314
Wind angle: -45°	150C1F3	9125	31454	62228	9153	28917	-61320
	380C2F1	18227	64410	125579	18306	57953	-122619
	380C2F2	18237	63735	125054	18306	57901	-122628
	380C2F3	18250	62909	124455	18306	57834	-122641
	RTG	0	0	0	5554	17235	-36566

ZWW4HL450+5

Loadcases for tower strength (serviceability limit state)

		Ahead			Back		
Loadcase according to 50341-3-15	Att. Point	Vertical [N]	Transversal [N]	Longitudinal [N]	Vertical [N]	Transversal [N]	Longitudinal [N]
NL4/1a	GW / opgw	2350	8444	16229	2350	8444	-16229
Wind, 10°C	150C1F1	8676	29855	58736	8676	29855	-58736
Permanent loads yg= 1.0	150C1F2	8680	29584	58545	8680	29584	-58545
Wind angle: 0°	150C1F3	8685	29253	58328	8685	29253	-58328
	380C2F1	17352	59710	117472	17352	59710	-117472
	380C2F2	17360	59169	117089	17360	59169	-117089
	380C2F3	17369	58506	116656	17369	58506	-116656
	RTG	0	0	0	4707	15946	-31687
NL4/1b	GW / opgw	2384	8326	17480	2384	8326	-17480
Wind, -20°C	150C1F1	8793	30947	65309	8793	30947	-65309
Permanent loads yg= 1.0	150C1F2	8793	30912	65311	8793	30912	-65311
Wind angle: 0°	150C1F3	8793	30868	65316	8793	30868	-65316
	380C2F1	17585	61894	130618	17585	61894	-130618
	380C2F2	17586	61824	130623	17586	61824	-130623
	380C2F3	17586	61735	130631	17586	61735	-130631
	RTG	0	0	0	4758	16393	-34654
NL4/3	GW / opgw	7979	21593	44374	7979	21593	-44374
Wind, -5°C	150C1F1	13707	42709	88636	13707	42709	-88636
Permanent loads yg= 1.0	150C1F2	13708	42603	88626	13708	42603	-88626
Wind angle: 0°	150C1F3	13709	42471	88619	13709	42471	-88619
	380C2F1	27413	85419	177272	27413	85419	-177272
	380C2F2	27415	85207	177252	27415	85207	-177252
	380C2F3	27417	84942	177238	27417	84942	-177238
	RTG	0	0	0	15981	42608	-88801
NL4/4	GW / opgw	2906	9041	19014	2906	9041	-19014
Construction/maintenance, +5°C	150C1F1	9797	30775	64939	9797	30775	-64939
Permanent loads yg= 1.0	150C1F2	9797	30741	64944	9797	30741	-64944
Wind angle: 0°	150C1F3	9797	30698	64951	9797	30698	-64951
	380C2F1	19594	61550	129879	19594	61550	-129879
	380C2F2	19594	61481	129888	19594	61481	-129888
	380C2F3	19594	61395	129901	19594	61395	-129901
	RTG	0	0	0	5805	17939	-37968
NL4/1a	GW / opgw	2357	7966	15854	2255	17025	-27217
Wind, 10°C	150C1F1	8693	28661	58000	8380	52070	-85506
Permanent loads yg= 1.0	150C1F2	8694	28510	57931	8402	49689	-82327
Wind angle: 45°	150C1F3	8697	28324	57855	8433	46707	-78379
	380C2F1	17385	57322	116000	16759	104140	-171012
	380C2F2	17389	57020	115862	16804	99378	-164654
	380C2F3	17393	56647	115710	16866	93415	-156757
	RTG	0	0	0	4565	26210	-43790
NL4/1b	GW / opgw	2384	8266	17482	2369	9298	-18083
Wind, -20°C	150C1F1	8794	30786	65328	8760	33414	-66430
Permanent loads yg= 1.0	150C1F2	8794	30764	65332	8764	33140	-66228
Wind angle: 45°	150C1F3	8794	30736	65338	8770	32806	-66000
	380C2F1	17587	61571	130655	17519	66828	-132861
	380C2F2	17587	61527	130663	17528	66281	-132457
	380C2F3	17587	61473	130675	17539	65612	-131999
	RTG	0	0	0	4745	17521	-35093
NL4/3	GW / opgw	7981	21283	44377	7904	26566	-47424
Wind, -5°C	150C1F1	13710	42227	88621	13582	50693	-94104
Permanent loads yg= 1.0	150C1F2	13711	42163	88626	13598	49789	-93240
Wind angle: 45°	150C1F3	13711	42082	88634	13617	48684	-92235
	380C2F1	27421	84454	177242	27164	101386	-188207
	380C2F2	27421	84325	177251	27196	99578	-186480
	380C2F3	27422	84164	177267	27235	97367	-184470
	RTG	0	0	0	15906	48413	-91100
NL4/4	GW / opgw	2906	8984	19021	2895	9912	-19398
Construction/maintenance, +5°C	150C1F1	9797	30617	64966	9771	33092	-65738
Permanent loads yg= 1.0	150C1F2	9797	30596	64971	9775	32840	-65582
Wind angle: 45°	150C1F3	9798	30569	64978	9779	32531	-65407
	380C2F1	19595	61235	129933	19543	66185	-131475
	380C2F2	19595	61192	129943	19550	65680	-131163
	380C2F3	19595	61138	129956	19558	65061	-130814
	RTG	0	0	0	5795	18973	-38204
NL4/1a	GW / opgw	2260	16191	26076	2260	16191	-26076
Wind, 10°C	150C1F1	8401	49812	82490	8401	49812	-82490
Permanent loads yg= 1.0	150C1F2	8423	47620	79583	8423	47620	-79583
Wind angle: 90°	150C1F3	8453	44884	75989	8453	44884	-75989
	380C2F1	16802	99623	164980	16802	99623	-164980
	380C2F2	16846	95241	159166	16846	95241	-159166
	380C2F3	16907	89767	151978	16907	89767	-151978
	RTG	0	0	0	4576	25141	-42365

NL4/1b	GW / opgw	2371	9193	17989	2371	9193	-17989
Wind, -20°C	150C1F1	8764	33154	66238	8764	33154	-66238
Permanent loads yg= 1.0	150C1F2	8768	32908	66067	8768	32908	-66067
Wind angle: 90°	150C1F3	8773	32605	65873	8773	32605	-65873
	380C2F1	17528	66309	132477	17528	66309	-132477
	380C2F2	17536	65815	132134	17536	65815	-132134
	380C2F3	17546	65211	131746	17546	65211	-131746
	RTG	0	0	0	4746	17404	-35014
NL4/3	GW / opgw	7913	26041	46964	7913	26041	-46964
Wind, -5°C	150C1F1	13597	49835	93283	13597	49835	-93283
Permanent loads yg= 1.0	150C1F2	13612	49019	92533	13612	49019	-92533
Wind angle: 90°	150C1F3	13629	48022	91665	13629	48022	-91665
	380C2F1	27194	99670	186566	27194	99670	-186566
	380C2F2	27223	98038	185067	27223	98038	-185067
	380C2F3	27258	96043	183330	27258	96043	-183330
	RTG	0	0	0	15916	47812	-90699
NL4/4	GW / opgw	2897	9820	19332	2897	9820	-19332
Construction/maintenance, +5°C	150C1F1	9775	32853	65589	9775	32853	-65589
Permanent loads yg= 1.0	150C1F2	9778	32625	65458	9778	32625	-65458
Wind angle: 90°	150C1F3	9782	32344	65311	9782	32344	-65311
	380C2F1	19549	65706	131179	19549	65706	-131179
	380C2F2	19556	65249	130916	19556	65249	-130916
	380C2F3	19563	64689	130623	19563	64689	-130623
	RTG	0	0	0	5796	18868	-38153
NL4/1a	GW / opgw	2255	17025	27217	2357	7966	-15854
Wind, 10°C	150C1F1	8380	52070	85506	8693	28661	-58000
Permanent loads yg= 1.0	150C1F2	8402	49689	82327	8694	28510	-57931
Wind angle: -45°	150C1F3	8433	46707	78379	8697	28324	-57855
	380C2F1	16759	104140	171012	17385	57322	-116000
	380C2F2	16804	99378	164654	17389	57020	-115862
	380C2F3	16866	93415	156757	17393	56647	-115710
	RTG	0	0	0	4714	15403	-31388
NL4/1b	GW / opgw	2369	9298	18083	2384	8266	-17482
Wind, -20°C	150C1F1	8760	33414	66430	8794	30786	-65328
Permanent loads yg= 1.0	150C1F2	8764	33140	66228	8794	30764	-65332
Wind angle: -45°	150C1F3	8770	32806	66000	8794	30736	-65338
	380C2F1	17519	66828	132861	17587	61571	-130655
	380C2F2	17528	66281	132457	17587	61527	-130663
	380C2F3	17539	65612	131999	17587	61473	-130675
	RTG	0	0	0	4758	16318	-34665
NL4/3	GW / opgw	7904	26566	47424	7981	21283	-44377
Wind, -5°C	150C1F1	13582	50693	94104	13710	42227	-88621
Permanent loads yg= 1.0	150C1F2	13598	49789	93240	13711	42163	-88626
Wind angle: -45°	150C1F3	13617	48684	92235	13711	42082	-88634
	380C2F1	27164	101386	188207	27421	84454	-177242
	380C2F2	27196	99578	186480	27421	84325	-177251
	380C2F3	27235	97367	184470	27422	84164	-177267
	RTG	0	0	0	15983	42220	-88855
NL4/4	GW / opgw	2895	9912	19398	2906	8984	-19021
Construction/maintenance, +5°C	150C1F1	9771	33092	65738	9797	30617	-64966
Permanent loads yg= 1.0	150C1F2	9775	32840	65582	9797	30596	-64971
Wind angle: -45°	150C1F3	9779	32531	65407	9798	30569	-64978
	380C2F1	19543	66185	131475	19595	61235	-129933
	380C2F2	19550	65680	131163	19595	61192	-129943
	380C2F3	19558	65061	130814	19595	61138	-129956
	RTG	0	0	0	5805	17866	-37985

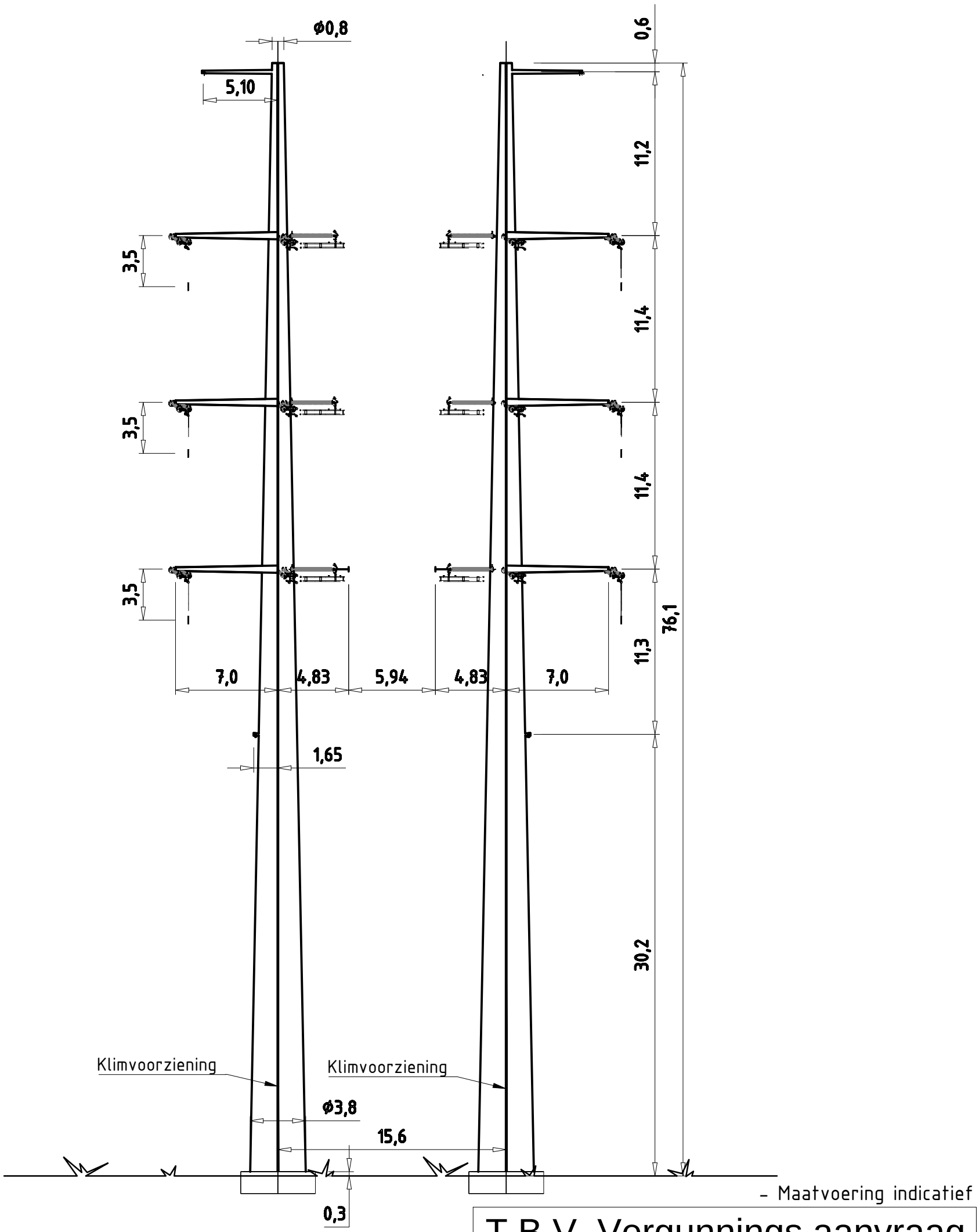

– Maatvoering indicatief

T.B.V. Vergunnings aanvraag

Wintrack
Masttype: ZWW4HL450+5

- Trekparameter 1800m
- 2x380 / 2x150 Hoekmast
- 450m Veldlengte
- 130°-150° Lijnhoek
- Uitvoering Staal of Beton
- Kleurstelling hoofdelement:
  Ral 9018 Papyrus white
- Kleurstelling Appendages:
  Ral 7021 Black grey

3.0	10-03-2014	Modified top traverse length
2.0	03-03-2014	Modified botom diameter
1.0	03-02-2014	First edition

KEMA DNV

Projectname: Engineering verbinding ZW380

Third angle projection:

Drawing no.: 74102194-035-115V

Design state: Definitief		Scale: 1:300	
Drawn by: RBE	10-03-2014	Units: m	
Checked by: AJP	10-03-2014	Project no: 000.145	
Approved by: AW	10-03-2014	Company: TenneT	

Description: Wintrack Masttype ZWW4HL450+5

Revision: 3.0

Format: A3

DNV KEMA Energy & Sustainability, Utrechtseweg 310, 6812 AR Arnhem, tel: +31 26 3 56 91 11, www.dnvkema.com

© 2014 - Filename: 74102194-035-115 - ZWW4HL450+5 Rev3.0.dwg

ZWM6S350

Fundatie berekening

Bijlage CBB

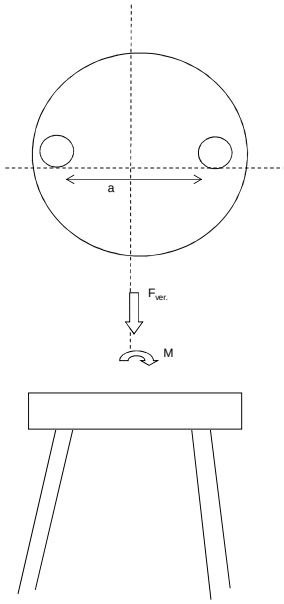

Fundatie ontwerp:
Heipaal

Afmetingen	b	400	mm
	d	400	mm
omtrek paal	$O_{p;gem}$	1,6	m
schoorstand		8	:1
α		7,125	graden
Opstort	Diameter	3,8	m
	Hoogte	1,8	m
	Inhoud	20,4	m^3
	e.g.	490	kN
Onderplaat	Diameter	9,0	m
	Hoogte	1,0	m
	Inhoud	64	m^3
	e.g.	1527	kN
Hart paal tov rand fund.		0,6	m

Optreden krachten

e.g. mast	397	kN
Fgeleiders	195	kN
Maximale dwarskracht	563	kN
Fmax vert (druk)	672	kN
Fmin vert (trek)	504	kN
Maximale moment	20832	kNm

Moment

F_{diag}	2895	kN	
F_{hor}	563	kN	
F_{ver}	2873	kN	
M_{hor} (tgv F_{hor})	1577	kNm	
M_{tot}	22409	kNm	reductie door opwaarste kracht water
F=M/a	2873	kN	

Verticaal reactiekracht

Fwater (trek)	840	kN
Fgrond (druk)	1411	kN
Fgrond (trek)	1176	kN
Fdmax (druk)	2393	kN
Ftmax (trek)	1184	kN
Fdtot (druk)	5266	kN
Fttot (trek)	1689	kN
Palen druk	5	(-)
Palen trek	6	(-)
Totaal palen	12	(-) Per fundering

ZWM6S350

TREKPALEN volgens CUR 2001-4 par. 8.

$$F_{r;trek;d} = \int_0^L O_{p;gem} \times p_{r;z;d} \times dz$$

Bijlage CBB

Bepaling opneembare paalbelasting op druk

heipaal

Afmeting paal	b	0,40	m
	b	0,40	m
omtrek paal	$O_{p;gem}$	1,60	m
paalfactor	α t	0,007	
aantal palen	M	1	
aantal sonderingen	N	1	
factor invloed aantal sonderingen	ξ	0,75	
conusweerstand over wrijvingstraject	$q_{c;z;max}$	15	MPa
	$q_{c;z;rep}$	11,25	MPa
materiaalfactor	$\gamma_{m;b4}$	1,4	
factor, wisselende belastingen	$\gamma_{m;var;qc}$	1,5	
	$q_{c;z;d}$	5,36	MPa
	$p_{r;z;d}$	37,5	kN/m^2
	$F_{r;trek;d;i}$	60,0	kN/m^1
	$F_{trek,d}$	596	kN/m

Bepaling opneembare trekbelasting paal

sondering	diepte		$q_{c;z}$		$P_{r;max;schacht;i}$	$F_{r;trek;d;i}$	$F_{trek,d}$
	m	m	MPa	α t	kPa	kN	kN
	0	-1	0	0,007	0,00	0,00	0
	-1	-2	0	0,007	0,00	0,00	0
	-2	-3	0	0,007	0,00	0,00	0
	-3	-4	0	0,007	0,00	0,00	0
	-4	-5	0	0,007	0,00	0,00	0
	-5	-6	0	0,007	0,00	0,00	0
	-6	-7	0	0,007	0,00	0,00	0
	-7	-8	0	0,007	0,00	0,00	0
	-8	-9	1	0,007	2,50	4,00	4
	-9	-10	3	0,007	7,50	12,00	16
	-10	-11	2	0,007	5,00	8,00	24
	-11	-12	0	0,007	0,00	0,00	24
	-12	-13	3	0,007	7,50	12,00	36
	-13	-14	2	0,007	5,00	8,00	44
	-14	-15	4	0,007	10,00	16,00	60
	-15	-16	10	0,007	25,00	40,00	100
	-16	-17	9	0,007	22,50	36,00	136
	-17	-18	8	0,007	20,00	32,00	168
	-18	-19	12	0,007	30,00	48,00	216
	-19	-20	12	0,007	30,00	48,00	264
	-20	-21	10	0,007	25,00	40,00	304
	-21	-22	11	0,007	27,50	44,00	348
	-22	-23	11	0,007	27,50	44,00	392
	-23	-24	12	0,007	30,00	48,00	440
	-24	-25	12	0,007	30,00	48,00	488
	-25	-26	12	0,007	30,00	48,00	536
	-26	-27	15	0,007	37,50	60,00	596

$F_{trek,d}$	596	kN	paalafmeting	400	mm, paalpuntnivo	-27,00 m

Paalgroep factor	10%	
$F_{trek,d}$	**536,4**	kN

ZWM6S350

DRUKPALEN

FUNDERINGSCONSTRUCTIE
Toelaatbare paalbelastingen

Bijlage CBB

Bepaling opneembare paalbelasting op druk

heipaal

		v		
	diameter	a	2	mm
			2	mm
	Deq		0,001808	

maximale puntweerstand

$P_{r;max;punt;i}$			11,25	MN/m²
paalklasse factor	α_p		1,00	
factor paalvoet	β		1	
hoek van inwendige vrijwing van paalvoet	ϕ		40	
factor dwarsdoorsnede paalvoet	s		1,00	
minimale waarde neergaande deel	$q_{c;II;gem}$		9,00	MN/m²
gem. sondeerwaarde neergaande deel	$q_{c;I;gem}$		14,00	MN/m²
gem. sondeerwaarde opgaande deel	$q_{c;III;gem}$		11,00	MN/m²

maximale paalschachtwrijving

$P_{r;max;schacht;i}$			0,05	MN/m²
waarin:				
paalfactor	α_s		0,010	
conusweerstand over wrijvingstraject	$q_{c;z;a}$		5,00	MN/m²

maximale draagkracht alleenstaande paal

$\mathbf{F_{r;max;i}}$			0,00	MN
waarin:				
$\mathbf{F_{r;max;punt;i}}$			0,00	MN
paalpunt oppervlak	A_{punt}		0,00	m²
$\mathbf{F_{r;max;schacht;i}}$			0,00	MN
gemiddelde paalomtrek	$O_{p;gem}$		0,01	m
lengte schachtwrijving	Δl		15,00	m

Bepaling rekenwaarde van de maximale draagkracht

$F_{r;paal;max;d}$		MN	0,00	MN
materiaalfactor grond	$\gamma_{m;b}$		1,20	
waarde afhankelijk van aantal palen en aantal sonderingen	$\xi_{1;N}$		0,75	

$F_{r;paal;max;d}$	3	kN	mm, paalpuntnivo	-27,00	m

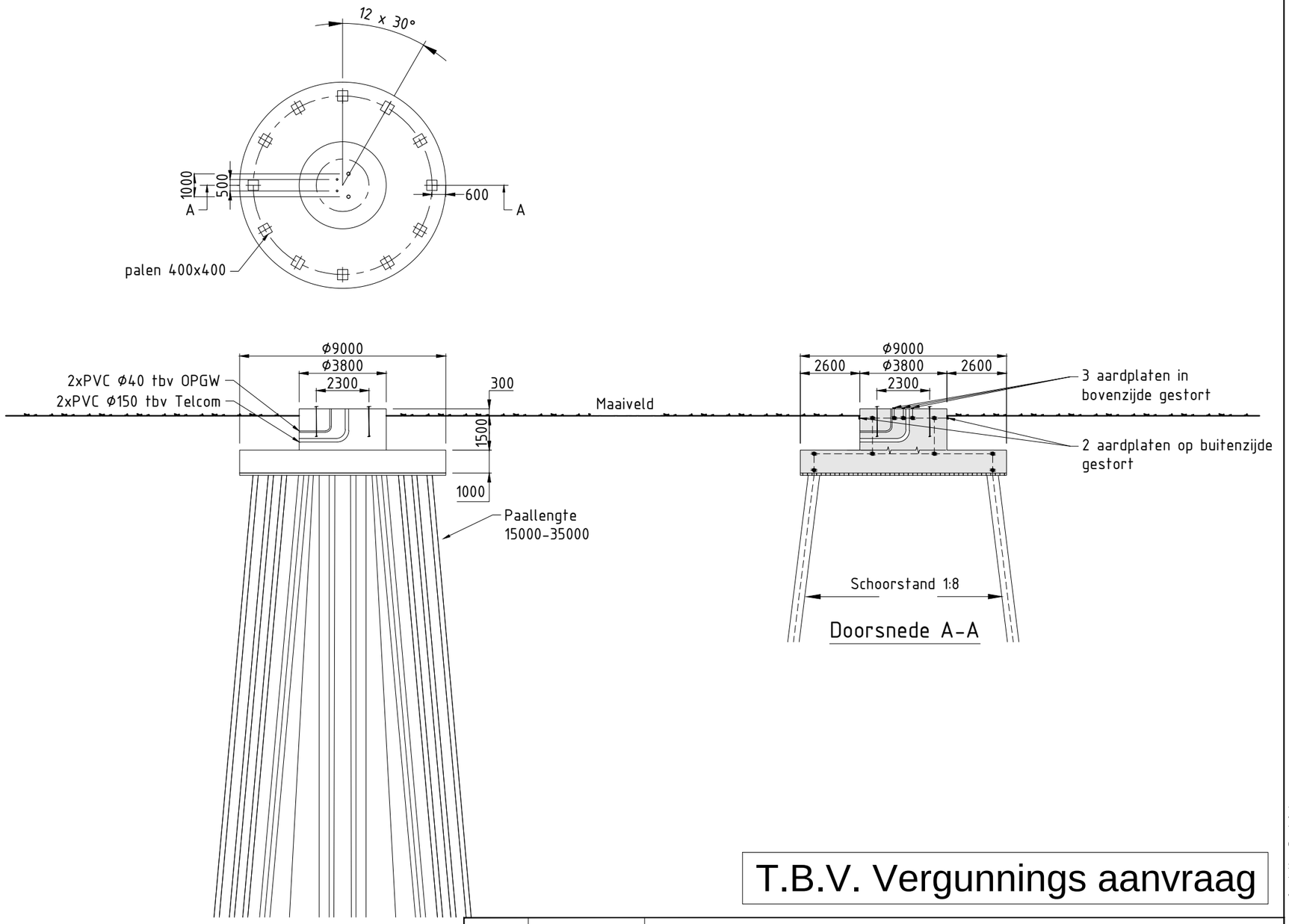

T.B.V. Vergunnings aanvraag

4.0	13-03-2014	Diverse aanpassingen
3.0	13-02-2014	Diverse aanpassingen
2.0	26-07-2013	Diverse aanpassingen

Verklaring

Gewapend beton

Werkvloer

Verklaring aarding

Ringleiding Ø16mm (FeB220) glad

Koppeling met aardstaaf in paal

Aardplaten

Opmerkingen

Maten in mm
Coordinaten in mm, in het stelsel van de rijksdriehoekmeting
Maatvoering in het 360 graden stelsel
Vellingkanten niet getekend
Ringleiding in bovenkant poer op het bovennet
plaatsen in de eerste laag
Mastvoetanker afmeting exclusief mastvoetflens breedte
Afmetingen indicatief

Projectname:
Engineering verbindingen ZW380

Third angle projection:

Drawing no.:
74102194-032-181V

Design state: Definitief		Scale:	1:200
Drawn by:	RBE	13-03-2014	Units: mm
Checked by:	AJP	13-03-2014	Project no: 000.145
Approved by:	AW	13-03-2014	Company: TenneT

Description:
Principe ontwerp fundatie steunmast ZWM6S350 masten familie

Revision: 4.0

Format: A3

DNV KEMA Energy & Sustainability, Utrechtseweg 310, 6812 AR Arnhem, tel: +31 26 3 56 91 11, www.dnvkema.com

© 2014 - Filename: 74102194-032-181 - ZWM6S350 Principe ontwerp fundaties Rev4.0.dwg

ZWM6S350

Loadcases for tower strength (ultimate limit state)

		Ahead			Back		
Loadcase according to 50341-3-15	Att. Point	Vertical [N]	Transversal [N]	Longitudinal [N]	Vertical [N]	Transversal [N]	Longitudinal [N]
NL1/1a	GW / opgw	2023	883	20006	2023	883	-20006
Wind, 10°C	380C1F1	14907	6465	146903	14907	6465	-146903
Permanent loads yg= 1.2	380C1F2	14907	6461	146903	14907	6461	-146903
Wind angle: 0°	380C1F3	14907	6455	146903	14907	6455	-146903
	380C2F1	14907	6465	146903	14907	6465	-146903
	380C2F2	14907	6461	146903	14907	6461	-146903
	380C2F3	14907	6455	146903	14907	6455	-146903
	RTG	4041	1758	39969	4041	1758	-39969
NL1/1b	GW / opgw	2022	1014	23186	2022	1014	-23186
Wind, -20°C	380C1F1	14900	7566	173044	14900	7566	-173044
Permanent loads yg= 1.2	380C1F2	14900	7565	173044	14900	7565	-173044
Wind angle: 0°	380C1F3	14900	7564	173044	14900	7564	-173044
	380C2F1	14900	7566	173044	14900	7566	-173044
	380C2F2	14900	7565	173044	14900	7565	-173044
	380C2F3	14900	7564	173044	14900	7564	-173044
	RTG	4039	2005	45870	4039	2005	-45870
NL1/3	GW / opgw	8159	2593	59181	8159	2593	-59181
Wind, -5°C	380C1F1	25690	10297	235183	25690	10297	-235183
Permanent loads yg= 1.2	380C1F2	25690	10295	235183	25690	10295	-235183
Wind angle: 0°	380C1F3	25690	10291	235183	25690	10291	-235183
	380C2F1	25690	10297	235183	25690	10297	-235183
	380C2F2	25690	10295	235183	25690	10295	-235183
	380C2F3	25690	10291	235183	25690	10291	-235183
	RTG	16341	5187	118498	16341	5187	-118498
NL1/4	GW / opgw	2775	1142	26120	2775	1142	-26120
Construction/maintenance, +5°C	380C1F1	17913	7568	173095	17913	7568	-173095
Permanent loads yg= 1.2	380C1F2	17913	7567	173095	17913	7567	-173095
Wind angle: 0°	380C1F3	17913	7566	173095	17913	7566	-173095
	380C2F1	17913	7568	173095	17913	7568	-173095
	380C2F2	17913	7567	173095	17913	7567	-173095
	380C2F3	17913	7566	173095	17913	7566	-173095
	RTG	5544	2280	52168	5544	2280	-52168
NL1/6	GW / opgw	2276	959	21955	2276	959	-21955
Permanent, +10°C	380C1F1	16772	7024	160876	16772	7024	-160876
Permanent loads yg= 1.35	380C1F2	16772	7024	160876	16772	7024	-160876
	380C1F3	16772	7024	160876	16772	7024	-160876
	380C2F1	16772	7024	160876	16772	7024	-160876
	380C2F2	16772	7024	160876	16772	7024	-160876
	380C2F3	16772	7024	160876	16772	7024	-160876
	RTG	4546	1916	43873	4546	1916	-43873
NL1/1a	GW / opgw	2024	3391	27071	2024	3909	-29272
Wind, 10°C	380C1F1	14910	20160	178916	14911	22996	-189826
Permanent loads yg= 1.2	380C1F2	14910	18918	174373	14911	21497	-183979
Wind angle: 45°	380C1F3	14909	17320	168803	14910	19566	-176723
	380C2F1	14910	20160	178916	14911	22996	-189826
	380C2F2	14910	18918	174373	14911	21497	-183979
	380C2F3	14909	17320	168803	14910	19566	-176723
	RTG	4041	5158	47701	4041	5863	-50407
NL1/1b	GW / opgw	2022	1470	23553	2022	1561	-23707
Wind, -20°C	380C1F1	14900	10088	174528	14900	10587	-175165
Permanent loads yg= 1.2	380C1F2	14900	9869	174281	14900	10324	-174816
Wind angle: 45°	380C1F3	14900	9586	173994	14900	9983	-174408
	380C2F1	14900	10088	174528	14900	10587	-175165
	380C2F2	14900	9869	174281	14900	10324	-174816
	380C2F3	14900	9586	173994	14900	9983	-174408
	RTG	4039	2633	46222	4039	2757	-46373
NL1/3	GW / opgw	8160	4919	60657	8160	5379	-61274
Wind, -5°C	380C1F1	25691	17411	240781	25692	18830	-243112
Permanent loads yg= 1.2	380C1F2	25691	16788	239870	25691	18080	-241837
Wind angle: 45°	380C1F3	25691	15985	238802	25691	17114	-240336
	380C2F1	25691	17411	240781	25692	18830	-243112
	380C2F2	25691	16788	239870	25691	18080	-241837
	380C2F3	25691	15985	238802	25691	17114	-240336
	RTG	16342	8387	119900	16342	9015	-120507
NL1/4	GW / opgw	2775	1592	26351	2775	1681	-26451
Construction/maintenance, +5°C	380C1F1	17913	10076	174215	17913	10569	-174703
Permanent loads yg= 1.2	380C1F2	17913	9859	174027	17913	10308	-174435
Wind angle: 45°	380C1F3	17913	9578	173807	17913	9972	-174123
	380C2F1	17913	10076	174215	17913	10569	-174703
	380C2F2	17913	9859	174027	17913	10308	-174435
	380C2F3	17913	9578	173807	17913	9972	-174123
	RTG	5544	2902	52386	5544	3024	-52482

NL1/1a	GW / opgw	2025	6632	41213	2025	6632	-41213
Wind, 10°C	380C1F1	14918	38072	253186	14918	38072	-253186
Permanent loads yg= 1.2	380C1F2	14916	35261	241123	14916	35261	-241123
Wind angle: 90°	380C1F3	14915	31614	225530	14915	31614	-225530
	380C2F1	14918	38072	253186	14918	38072	-253186
	380C2F2	14916	35261	241123	14916	35261	-241123
	380C2F3	14915	31614	225530	14915	31614	-225530
	RTG	4043	9632	66522	4043	9632	-66522
NL1/1b	GW / opgw	2022	2052	24892	2022	2052	-24892
Wind, -20°C	380C1F1	14900	13264	180176	14900	13264	-180176
Permanent loads yg= 1.2	380C1F2	14900	12758	179044	14900	12758	-179044
Wind angle: 90°	380C1F3	14900	12108	177706	14900	12108	-177706
	380C2F1	14900	13264	180176	14900	13264	-180176
	380C2F2	14900	12758	179044	14900	12758	-179044
	380C2F3	14900	12108	177706	14900	12108	-177706
	RTG	4039	3421	47572	4039	3421	-47572
NL1/3	GW / opgw	8162	7843	65892	8162	7843	-65892
Wind, -5°C	380C1F1	25695	26466	260608	25695	26466	-260608
Permanent loads yg= 1.2	380C1F2	25694	25023	256771	25694	25023	-256771
Wind angle: 90°	380C1F3	25693	23166	252157	25693	23166	-252157
	380C2F1	25695	26466	260608	25695	26466	-260608
	380C2F2	25694	25023	256771	25694	25023	-256771
	380C2F3	25693	23166	252157	25693	23166	-252157
	RTG	16344	12361	125246	16344	12361	-125246
NL1/4	GW / opgw	2775	2155	27239	2775	2155	-27239
Construction/maintenance, +5°C	380C1F1	17914	13198	178597	17914	13198	-178597
Permanent loads yg= 1.2	380C1F2	17914	12703	177710	17914	12703	-177710
Wind angle: 90°	380C1F3	17914	12065	176668	17914	12065	-176668
	380C2F1	17914	13198	178597	17914	13198	-178597
	380C2F2	17914	12703	177710	17914	12703	-177710
	380C2F3	17914	12065	176668	17914	12065	-176668
	RTG	5544	3670	53262	5544	3670	-53262
NL1/1a	GW / opgw	2024	3909	29272	2024	3391	-27071
Wind, 10°C	380C1F1	14911	22996	189826	14910	20160	-178916
Permanent loads yg= 1.2	380C1F2	14911	21497	183979	14910	18918	-174373
Wind angle: -45°	380C1F3	14910	19566	176723	14909	17320	-168803
	380C2F1	14911	22996	189826	14910	20160	-178916
	380C2F2	14911	21497	183979	14910	18918	-174373
	380C2F3	14910	19566	176723	14909	17320	-168803
	RTG	4041	5863	50407	4041	5158	-47701
NL1/1b	GW / opgw	2022	1561	23707	2022	1470	-23553
Wind, -20°C	380C1F1	14900	10587	175165	14900	10088	-174528
Permanent loads yg= 1.2	380C1F2	14900	10324	174816	14900	9869	-174281
Wind angle: -45°	380C1F3	14900	9983	174408	14900	9586	-173994
	380C2F1	14900	10587	175165	14900	10088	-174528
	380C2F2	14900	10324	174816	14900	9869	-174281
	380C2F3	14900	9983	174408	14900	9586	-173994
	RTG	4039	2757	46373	4039	2633	-46222
NL1/3	GW / opgw	8160	5379	61274	8160	4919	-60657
Wind, -5°C	380C1F1	25692	18830	243112	25691	17411	-240781
Permanent loads yg= 1.2	380C1F2	25691	18080	241837	25691	16788	-239870
Wind angle: -45°	380C1F3	25691	17114	240336	25691	15985	-238802
	380C2F1	25692	18830	243112	25691	17411	-240781
	380C2F2	25691	18080	241837	25691	16788	-239870
	380C2F3	25691	17114	240336	25691	15985	-238802
	RTG	16342	9015	120507	16342	8387	-119900
NL1/4	GW / opgw	2775	1681	26451	2775	1592	-26351
Construction/maintenance, +5°C	380C1F1	17913	10569	174703	17913	10076	-174215
Permanent loads yg= 1.2	380C1F2	17913	10308	174435	17913	9859	-174027
Wind angle: -45°	380C1F3	17913	9972	174123	17913	9578	-173807
	380C2F1	17913	10569	174703	17913	10076	-174215
	380C2F2	17913	10308	174435	17913	9859	-174027
	380C2F3	17913	9972	174123	17913	9578	-173807
	RTG	5544	3024	52482	5544	2902	-52386
NL1//1a	GW / opgw	1517	703	15884	1517	703	-15884
Wind, 10°C	380C1F1	11178	5172	117275	11178	5172	-117275
Permanent loads yg= 0.9	380C1F2	11178	5167	117275	11178	5167	-117275
Wind angle: 0°	380C1F3	11178	5162	117275	11178	5162	-117275
	380C2F1	11178	5172	117275	11178	5172	-117275
	380C2F2	11178	5167	117275	11178	5167	-117275
	380C2F3	11178	5162	117275	11178	5162	-117275
	RTG	3030	1398	31716	3030	1398	-31716

NL1/1b	GW / opgw	1516	826	18875	1516	826	-18875
Wind, -20°C	380C1F1	11172	6225	142343	11172	6225	-142343
Permanent loads yg= 0.9	380C1F2	11172	6224	142343	11172	6224	-142343
Wind angle: 0°	380C1F3	11172	6223	142343	11172	6223	-142343
	380C2F1	11172	6225	142343	11172	6225	-142343
	380C2F2	11172	6224	142343	11172	6224	-142343
	380C2F3	11172	6223	142343	11172	6223	-142343
	RTG	3029	1629	37244	3029	1629	-37244
NL1/3	GW / opgw	7652	2479	56560	7652	2479	-56560
Wind, -5°C	380C1F1	21959	9207	210225	21959	9207	-210225
Permanent loads yg= 0.9	380C1F2	21959	9205	210225	21959	9205	-210225
Wind angle: 0°	380C1F3	21959	9202	210225	21959	9202	-210225
	380C2F1	21959	9207	210225	21959	9207	-210225
	380C2F2	21959	9205	210225	21959	9205	-210225
	380C2F3	21959	9202	210225	21959	9202	-210225
	RTG	15328	4958	113249	15328	4958	-113249
NL1/4	GW / opgw	2269	979	22373	2269	979	-22373
Construction/maintenance, +5°C	380C1F1	14184	6343	145048	14184	6343	-145048
Permanent loads yg= 0.9	380C1F2	14184	6342	145048	14184	6342	-145048
Wind angle: 0°	380C1F3	14184	6341	145048	14184	6341	-145048
	380C2F1	14184	6343	145048	14184	6343	-145048
	380C2F2	14184	6342	145048	14184	6342	-145048
	380C2F3	14184	6341	145048	14184	6341	-145048
	RTG	4533	1953	44666	4533	1953	-44666
NL1/6	GW / opgw	1517	694	15884	1517	694	-15884
Permanent, +10°C	380C1F1	11178	5120	117276	11178	5120	-117276
Permanent loads yg= 0.9	380C1F2	11178	5120	117276	11178	5120	-117276
	380C1F3	11178	5120	117276	11178	5120	-117276
	380C2F1	11178	5120	117276	11178	5120	-117276
	380C2F2	11178	5120	117276	11178	5120	-117276
	380C2F3	11178	5120	117276	11178	5120	-117276
	RTG	3030	1385	31716	3030	1385	-31716
NL1/1a	GW / opgw	1518	3292	24827	1518	3824	-27336
Wind, 10°C	380C1F1	11181	19308	159431	11182	22238	-172505
Permanent loads yg= 0.9	380C1F2	11181	18021	153849	11182	20691	-165550
Wind angle: 45°	380C1F3	11180	16361	146871	11181	18693	-156747
	380C2F1	11181	19308	159431	11182	22238	-172505
	380C2F2	11181	18021	153849	11182	20691	-165550
	380C2F3	11180	16361	146871	11181	18693	-156747
	RTG	3031	4907	41972	3031	5638	-45259
NL1/1b	GW / opgw	1516	1289	19414	1516	1383	-19636
Wind, -20°C	380C1F1	11173	8779	144555	11173	9291	-145483
Permanent loads yg= 0.9	380C1F2	11173	8555	144194	11173	9020	-144975
Wind angle: 45°	380C1F3	11173	8266	143771	11173	8672	-144379
	380C2F1	11173	8779	144555	11173	9291	-145483
	380C2F2	11173	8555	144194	11173	9020	-144975
	380C2F3	11173	8266	143771	11173	8672	-144379
	RTG	3029	2264	37768	3029	2391	-37989
NL1/3	GW / opgw	7653	4810	58170	7653	5273	-58839
Wind, -5°C	380C1F1	21960	16377	217126	21960	17818	-219954
Permanent loads yg= 0.9	380C1F2	21960	15746	216016	21960	17056	-218410
Wind angle: 45°	380C1F3	21960	14932	214710	21960	16075	-216585
	380C2F1	21960	16377	217126	21960	17818	-219954
	380C2F2	21960	15746	216016	21960	17056	-218410
	380C2F3	21960	14932	214710	21960	16075	-216585
	RTG	15328	8163	114784	15329	8793	-115445
NL1/4	GW / opgw	2269	1432	22678	2269	1522	-22808
Construction/maintenance, +5°C	380C1F1	14184	8870	146600	14184	9370	-147264
Permanent loads yg= 0.9	380C1F2	14184	8650	146342	14184	9106	-146899
Wind angle: 45°	380C1F3	14184	8366	146042	14184	8765	-146474
	380C2F1	14184	8870	146600	14184	9370	-147264
	380C2F2	14184	8650	146342	14184	9106	-146899
	380C2F3	14184	8366	146042	14184	8765	-146474
	RTG	4533	2578	44956	4533	2701	-45082
NL1/1a	GW / opgw	1519	6587	40184	1519	6587	-40184
Wind, 10°C	380C1F1	11188	37635	243221	11188	37635	-243221
Permanent loads yg= 0.9	380C1F2	11187	34782	230194	11187	34782	-230194
Wind angle: 90°	380C1F3	11185	31070	213121	11185	31070	-213121
	380C2F1	11188	37635	243221	11188	37635	-243221
	380C2F2	11187	34782	230194	11187	34782	-230194
	380C2F3	11185	31070	213121	11185	31070	-213121
	RTG	3032	9497	63461	3032	9497	-63461

NL1/1b	GW / opgw	1517	1894	21275	1517	1894	-21275
Wind, -20°C	380C1F1	11173	12059	152600	11173	12059	-152600
Permanent loads yg= 0.9	380C1F2	11173	11534	151018	11173	11534	-151018
Wind angle: 90°	380C1F3	11173	10859	149130	11173	10859	-149130
	380C2F1	11173	12059	152600	11173	12059	-152600
	380C2F2	11173	11534	151018	11173	11534	-151018
	380C2F3	11173	10859	149130	11173	10859	-149130
	RTG	3029	3077	39697	3029	3077	-39697
NL1/3	GW / opgw	7654	7750	63790	7654	7750	-63790
Wind, -5°C	380C1F1	21963	25593	240665	21963	25593	-240665
Permanent loads yg= 0.9	380C1F2	21963	24123	236189	21963	24123	-236189
Wind angle: 90°	380C1F3	21962	22230	230761	21962	22230	-230761
	380C2F1	21963	25593	240665	21963	25593	-240665
	380C2F2	21963	24123	236189	21963	24123	-236189
	380C2F3	21962	22230	230761	21962	22230	-230761
	RTG	15330	12156	120568	15330	12156	-120568
NL1/4	GW / opgw	2269	2006	23815	2269	2006	-23815
Construction/maintenance, +5°C	380C1F1	14184	12056	152473	14184	12056	-152473
Permanent loads yg= 0.9	380C1F2	14184	11549	151298	14184	11549	-151298
Wind angle: 90°	380C1F3	14184	10896	149908	14184	10896	-149908
	380C2F1	14184	12056	152473	14184	12056	-152473
	380C2F2	14184	11549	151298	14184	11549	-151298
	380C2F3	14184	10896	149908	14184	10896	-149908
	RTG	4533	3357	46090	4533	3357	-46090
NL1/1a	GW / opgw	1518	3824	27336	1518	3292	-24827
Wind, 10°C	380C1F1	11182	22238	172505	11181	19308	-159431
Permanent loads yg= 0.9	380C1F2	11182	20691	165550	11181	18021	-153849
Wind angle: -45°	380C1F3	11181	18693	156747	11180	16361	-146871
	380C2F1	11182	22238	172505	11181	19308	-159431
	380C2F2	11182	20691	165550	11181	18021	-153849
	380C2F3	11181	18693	156747	11180	16361	-146871
	RTG	3031	5638	45259	3031	4907	-41972
NL1/1b	GW / opgw	1516	1383	19636	1516	1289	-19414
Wind, -20°C	380C1F1	11173	9291	145483	11173	8779	-144555
Permanent loads yg= 0.9	380C1F2	11173	9020	144975	11173	8555	-144194
Wind angle: -45°	380C1F3	11173	8672	144379	11173	8266	-143771
	380C2F1	11173	9291	145483	11173	8779	-144555
	380C2F2	11173	9020	144975	11173	8555	-144194
	380C2F3	11173	8672	144379	11173	8266	-143771
	RTG	3029	2391	37989	3029	2264	-37768
NL1/3	GW / opgw	7653	5273	58839	7653	4810	-58170
Wind, -5°C	380C1F1	21960	17818	219954	21960	16377	-217126
Permanent loads yg= 0.9	380C1F2	21960	17056	218410	21960	15746	-216016
Wind angle: -45°	380C1F3	21960	16075	216585	21960	14932	-214710
	380C2F1	21960	17818	219954	21960	16377	-217126
	380C2F2	21960	17056	218410	21960	15746	-216016
	380C2F3	21960	16075	216585	21960	14932	-214710
	RTG	15329	8793	115445	15328	8163	-114784
NL1/4	GW / opgw	2269	1522	22808	2269	1432	-22678
Construction/maintenance, +5°C	380C1F1	14184	9370	147264	14184	8870	-146600
Permanent loads yg= 0.9	380C1F2	14184	9106	146899	14184	8650	-146342
Wind angle: -45°	380C1F3	14184	8765	146474	14184	8366	-146042
	380C2F1	14184	9370	147264	14184	8870	-146600
	380C2F2	14184	9106	146899	14184	8650	-146342
	380C2F3	14184	8765	146474	14184	8366	-146042
	RTG	4533	2701	45082	4533	2578	-44956

ZWM6S350

Loadcases for tower strength (serviceability limit state)

		Ahead			Back		
Loadcase according to 50341-3-15	Att. Point	Vertical [N]	Transversal [N]	Longitudinal [N]	Vertical [N]	Transversal [N]	Longitudinal [N]
NL4/1a	GW / opgw	1686	761	17296	1686	761	-17296
Wind, 10°C	380C1F1	12421	5598	127433	12421	5598	-127433
Permanent loads yg= 1.0	380C1F2	12421	5595	127433	12421	5595	-127433
Wind angle: 0°	380C1F3	12421	5591	127433	12421	5591	-127433
	380C2F1	12421	5598	127433	12421	5598	-127433
	380C2F2	12421	5595	127433	12421	5595	-127433
	380C2F3	12421	5591	127433	12421	5591	-127433
	RTG	3367	1517	34541	3367	1517	-34541
NL4/1b	GW / opgw	1685	890	20358	1685	890	-20358
Wind, -20°C	380C1F1	12415	6683	152909	12415	6683	-152909
Permanent loads yg= 1.0	380C1F2	12415	6682	152909	12415	6682	-152909
Wind angle: 0°	380C1F3	12415	6682	152909	12415	6682	-152909
	380C2F1	12415	6683	152909	12415	6683	-152909
	380C2F2	12415	6682	152909	12415	6682	-152909
	380C2F3	12415	6682	152909	12415	6682	-152909
	RTG	3365	1757	40210	3365	1757	-40210
NL4/3	GW / opgw	5774	2028	46309	5774	2028	-46309
Wind, -5°C	380C1F1	19606	8480	193777	19606	8480	-193777
Permanent loads yg= 1.0	380C1F2	19606	8478	193777	19606	8478	-193777
Wind angle: 0°	380C1F3	19606	8476	193777	19606	8476	-193777
	380C2F1	19606	8480	193777	19606	8480	-193777
	380C2F2	19606	8478	193777	19606	8478	-193777
	380C2F3	19606	8476	193777	19606	8476	-193777
	RTG	11562	4053	92635	11562	4053	-92635
NL4/4	GW / opgw	2187	951	21745	2187	951	-21745
Construction/maintenance, +5°C	380C1F1	14424	6422	146922	14424	6422	-146922
Permanent loads yg= 1.0	380C1F2	14424	6421	146922	14424	6421	-146922
Wind angle: 0°	380C1F3	14424	6420	146922	14424	6420	-146922
	380C2F1	14424	6422	146922	14424	6422	-146922
	380C2F2	14424	6421	146922	14424	6421	-146922
	380C2F3	14424	6420	146922	14424	6420	-146922
	RTG	4369	1897	43401	4369	1897	-43401
NL4/1a	GW / opgw	1686	2415	21596	1686	2759	-23042
Wind, 10°C	380C1F1	12422	14626	146473	12423	16499	-153373
Permanent loads yg= 1.0	380C1F2	12422	13807	143653	12423	15508	-149653
Wind angle: 45°	380C1F3	12422	12755	140243	12422	14234	-145108
	380C2F1	12422	14626	146473	12423	16499	-153373
	380C2F2	12422	13807	143653	12423	15508	-149653
	380C2F3	12422	12755	140243	12422	14234	-145108
	RTG	3367	3756	39094	3367	4222	-40779
NL4/1b	GW / opgw	1685	1192	20565	1685	1252	-20653
Wind, -20°C	380C1F1	12415	8358	153743	12415	8688	-154104
Permanent loads yg= 1.0	380C1F2	12415	8213	153603	12415	8513	-153906
Wind angle: 45°	380C1F3	12415	8025	153440	12415	8288	-153674
	380C2F1	12415	8358	153743	12415	8688	-154104
	380C2F2	12415	8213	153603	12415	8513	-153906
	380C2F3	12415	8025	153440	12415	8288	-153674
	RTG	3365	2174	40407	3365	2256	-40493
NL4/3	GW / opgw	5774	3580	47353	5774	3888	-47790
Wind, -5°C	380C1F1	19607	13214	197347	19607	14157	-198847
Permanent loads yg= 1.0	380C1F2	19607	12800	196763	19607	13659	-198026
Wind angle: 45°	380C1F3	19607	12266	196079	19607	13016	-197062
	380C2F1	19607	13214	197347	19607	14157	-198847
	380C2F2	19607	12800	196763	19607	13659	-198026
	380C2F3	19607	12266	196079	19607	13016	-197062
	RTG	11562	6188	93627	11562	6607	-94056
NL4/4	GW / opgw	2187	1250	21884	2187	1309	-21944
Construction/maintenance, +5°C	380C1F1	14424	8089	147575	14424	8416	-147863
Permanent loads yg= 1.0	380C1F2	14424	7945	147465	14424	8244	-147705
Wind angle: 45°	380C1F3	14424	7759	147336	14424	8021	-147521
	380C2F1	14424	8089	147575	14424	8416	-147863
	380C2F2	14424	7945	147465	14424	8244	-147705
	380C2F3	14424	7759	147336	14424	8021	-147521
	RTG	4369	2311	43532	4369	2391	-43590
NL4/1a	GW / opgw	1687	4589	31351	1687	4589	-31351
Wind, 10°C	380C1F1	12427	26563	196022	12427	26563	-196022
Permanent loads yg= 1.0	380C1F2	12426	24675	187644	12426	24675	-187644
Wind angle: 90°	380C1F3	12425	22233	176967	12425	22233	-176967
	380C2F1	12427	26563	196022	12427	26563	-196022
	380C2F2	12426	24675	187644	12426	24675	-187644
	380C2F3	12425	22233	176967	12425	22233	-176967
	RTG	3368	6730	51463	3368	6730	-51463

NL4/1b	GW / opgw	1685	1575	21343	1685	1575	-21343
Wind, -20°C	380C1F1	12415	10452	156989	12415	10452	-156989
Permanent loads yg= 1.0	380C1F2	12415	10119	156331	12415	10119	-156331
Wind angle: 90°	380C1F3	12415	9691	155559	12415	9691	-155559
	380C2F1	12415	10452	156989	12415	10452	-156989
	380C2F2	12415	10119	156331	12415	10119	-156331
	380C2F3	12415	9691	155559	12415	9691	-155559
	RTG	3365	2694	41180	3365	2694	-41180
NL4/3	GW / opgw	5775	5539	51088	5775	5539	-51088
Wind, -5°C	380C1F1	19609	19236	210291	19609	19236	-210291
Permanent loads yg= 1.0	380C1F2	19608	18276	207754	19608	18276	-207754
Wind angle: 90°	380C1F3	19608	17040	204723	19608	17040	-204723
	380C2F1	19609	19236	210291	19609	19236	-210291
	380C2F2	19608	18276	207754	19608	18276	-207754
	380C2F3	19608	17040	204723	19608	17040	-204723
	RTG	11563	8846	97418	11563	8846	-97418
NL4/4	GW / opgw	2187	1623	22428	2187	1623	-22428
Construction/maintenance, +5°C	380C1F1	14425	10156	150180	14425	10156	-150180
Permanent loads yg= 1.0	380C1F2	14424	9829	149649	14424	9829	-149649
Wind angle: 90°	380C1F3	14424	9407	149028	14424	9407	-149028
	380C2F1	14425	10156	150180	14425	10156	-150180
	380C2F2	14424	9829	149649	14424	9829	-149649
	380C2F3	14424	9407	149028	14424	9407	-149028
	RTG	4369	2820	44064	4369	2820	-44064
NL4/1a	GW / opgw	1686	2759	23042	1686	2415	-21596
Wind, 10°C	380C1F1	12423	16499	153373	12422	14626	-146473
Permanent loads yg= 1.0	380C1F2	12423	15508	149653	12422	13807	-143653
Wind angle: -45°	380C1F3	12422	14234	145108	12422	12755	-140243
	380C2F1	12423	16499	153373	12422	14626	-146473
	380C2F2	12423	15508	149653	12422	13807	-143653
	380C2F3	12422	14234	145108	12422	12755	-140243
	RTG	3367	4222	40779	3367	3756	-39094
NL4/1b	GW / opgw	1685	1252	20653	1685	1192	-20565
Wind, -20°C	380C1F1	12415	8688	154104	12415	8358	-153743
Permanent loads yg= 1.0	380C1F2	12415	8513	153906	12415	8213	-153603
Wind angle: -45°	380C1F3	12415	8288	153674	12415	8025	-153440
	380C2F1	12415	8688	154104	12415	8358	-153743
	380C2F2	12415	8513	153906	12415	8213	-153603
	380C2F3	12415	8288	153674	12415	8025	-153440
	RTG	3365	2256	40493	3365	2174	-40407
NL4/3	GW / opgw	5774	3888	47790	5774	3580	-47353
Wind, -5°C	380C1F1	19607	14157	198847	19607	13214	-197347
Permanent loads yg= 1.0	380C1F2	19607	13659	198026	19607	12800	-196763
Wind angle: -45°	380C1F3	19607	13016	197062	19607	12266	-196079
	380C2F1	19607	14157	198847	19607	13214	-197347
	380C2F2	19607	13659	198026	19607	12800	-196763
	380C2F3	19607	13016	197062	19607	12266	-196079
	RTG	11562	6607	94056	11562	6188	-93627
NL4/4	GW / opgw	2187	1309	21944	2187	1250	-21884
Construction/maintenance, +5°C	380C1F1	14424	8416	147863	14424	8089	-147575
Permanent loads yg= 1.0	380C1F2	14424	8244	147705	14424	7945	-147465
Wind angle: -45°	380C1F3	14424	8021	147521	14424	7759	-147336
	380C2F1	14424	8416	147863	14424	8089	-147575
	380C2F2	14424	8244	147705	14424	7945	-147465
	380C2F3	14424	8021	147521	14424	7759	-147336
	RTG	4369	2391	43590	4369	2311	-43532

ZWM6S350

Bijlage BBB

Location dependent data to obtain pressures

Wind area			2	
Terrain catagory	O=onbebouwd, B=bebouwd		O	
Hoogte		h	53.3	m
Diameter voet		d voet	2.3	m
top		d top	0.8	m
gem		d gem	1.6	m
wanddikte		t	20	mm
Oppervlakte aan voet		A	143257	mm^2
Traagheidsmoment aan voet		W_x	8.10E+07	mm^3
Weerstandsmoment aan voet		I_x	9.22E+10	mm^4
		2de orde	10.0	%
Mast: Gewicht		$F_{rep;ver}$	397	kN

Ultimate limit state	**hoogte**	**F_{ver}**	**$F_{loodrecht}$**	**$F_{//}$**	$F_{Samengesteld}$		
	m	kN	kN	kN	kN		
GW / opgw	52.6	4.1	13.3	0.0	13.3	698	kNm
380C1F1	43.8	29.8	76.1	0.0	76.1	3335	kNm
380C1F2	34.8	29.8	70.5	0.0	70.5	2454	kNm
380C1F3	25.8	29.8	63.2	0.0	63.2	1631	kNm
380C2F1	43.8	29.8	76.1	0.0	76.1	3335	kNm
380C2F2	34.8	29.8	70.5	0.0	70.5	2454	kNm
380C2F3	25.8	29.8	63.2	0.0	63.2	1631	kNm
RTG	21.6	8.1	19.3	0.0	19.3	416	kNm
GW / opgw	52.6	4.1	13.3	0.0	13.3	698	kNm

Stuwdruk	$F_{hor.}$	23.3	kN
	$M_{d;wind}$	579	kNm
Totaal	$M_{d;tot}$	18939	kNm
Totaal moment incl. 2^{ue} orde effect	$M_{d;tot}$	20832	kNm

Normaalkracht;

Optredende normaalkracht

$N_{d;geleiders}$	191	kN
$N_{d;\ e.g.\ mast}$	476	kN
$N_{s;d;totaal}$	672	kN

Is buis plooigevoelig tgv normaalkracht: conform NEN-EN 50341 par. 7.4.5.4

	JA	
ρ_a	0.66	
A_{eff}	94928	mm^2

Optredende spanning tgv normaalkracht

$N_{sd}/A_{eff} = f_{yd}/y_{m1}$ 7 N/mm^2

Moment;

Optredende moment in de voet:

$M_{d;tot}$ 20832 kNm

Is buis plooigevoelig tgv momentkracht: conform NEN-EN 50341 par. 7.4.5.4

	JA	
ρ_a	0.96	
W_{eff}	7.79E+07	mm^3

Optredende spaning tgv moment:

$M_d/W_{eff} = f_{yd}/y_{m1}$ 267 N/mm^2

Totale spanning:

σ_d	274	N/mm^2	< 284 N/mm^2 = ACCOORD
$\sigma_{d;toegestaan}$	284	N/mm^2	==> 80% van 355 N/mm^2

Special limit state	**hoogte**	**F_{ver}**	**$F_{loodrecht}$**	**$F_{//}$**	$F_{Samengesteld}$		
	m	kN	kN	kN	kN		
GW / opgw	52.6	3.4	9.2	0.0	9.2	483	kNm
380C1F1	43.8	24.9	53.1	0.0	53.1	2327	kNm
380C1F2	34.8	24.9	49.4	0.0	49.4	1717	kNm
380C1F3	25.8	24.8	44.5	0.0	44.5	1147	kNm
380C2F1	43.8	24.9	53.1	0.0	53.1	2327	kNm
380C2F2	34.8	24.9	49.4	0.0	49.4	1717	kNm
380C2F3	25.8	24.8	44.5	0.0	44.5	1147	kNm
RTG	21.6	6.7	13.5	0.0	13.5	291	kNm
GW / opgw	52.6	3.4	9.2	0.0	9.2	483	kNm
GW / opgw	52.6	0.0	0.0	0.0	0.0	0	kNm
Stuwdruk					$F_{hor.}$	642	kN

Verplaating	0.93	m	2.89	EIS TENNET VISUEE
Percentage van de verplaatsing	1.75%		5.5%	NEN-EN-50341
Hoek	1.70	graden		
Kromming	0.34%		1%	NEN-EN-50341
Fundatie rotatiestijfheid	0.005	rad		

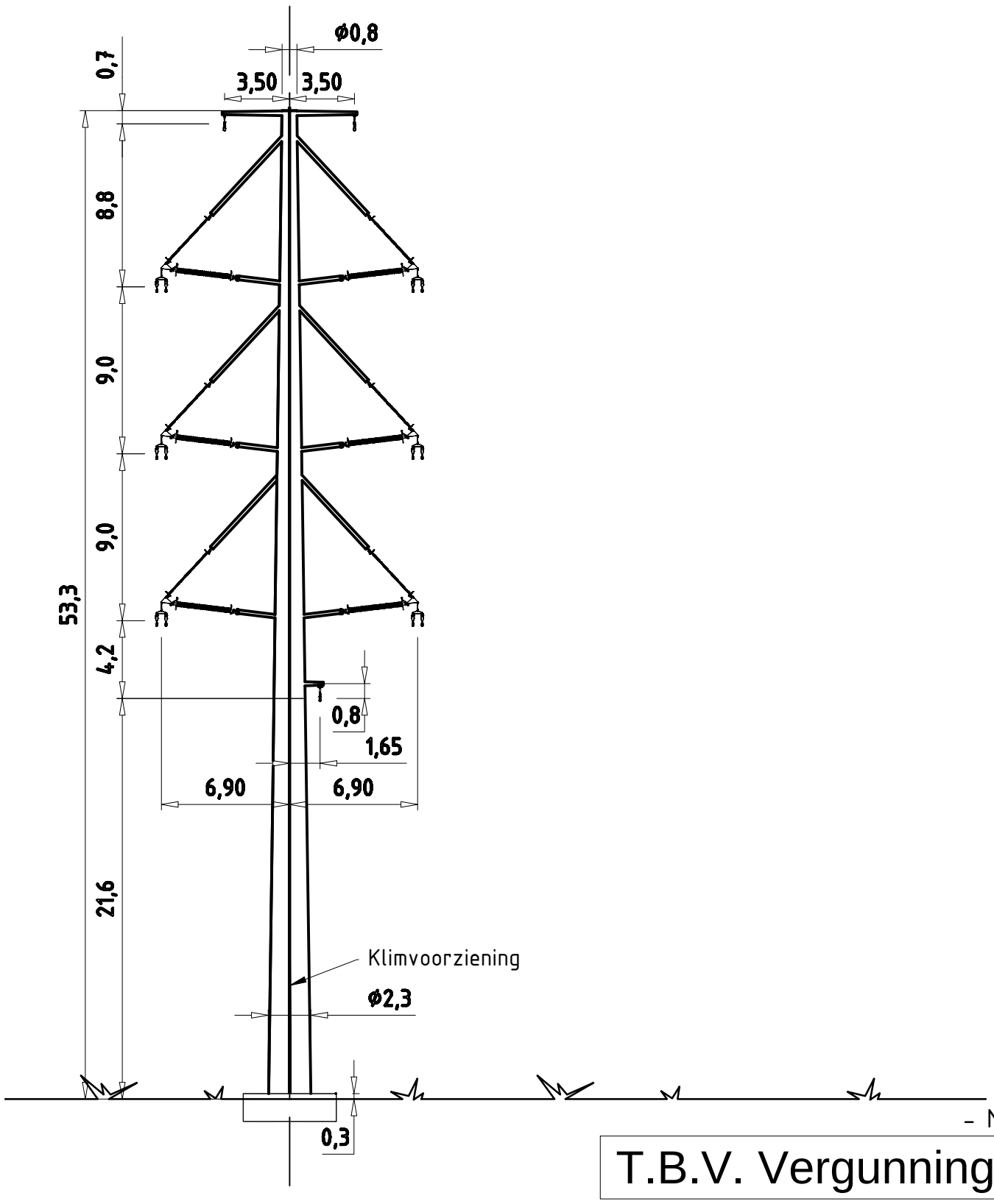

- Maatvoering indicatief

T.B.V. Vergunnings aanvraag

Wintrack
Masttype: ZWM6S350

- Trekparameter 1800m
- 2x380 Steunmast
- 350m Veldlengte
- 175°-180° Lijnhoek
- Uitvoering Staal of Beton
- Kleurstelling hoofdelement:
  Ral 9018 Papyrus white
- Kleurstelling Appendages:
  Ral 7021 Black grey

3.0	06-03-2014	New 380kV braced-V
2.0	03-02-2014	Modified top/botom diameter
1.0	16-04-2013	First edition

KEMA DNV

Projectname: Engineering verbinding ZW380

Third angle projection:

Drawing no.: 74102194-035-181V

Design state: Definitief		Scale: 1:300	
Drawn by: RBE	06-03-2014	Units: m	
Checked by: AJP	06-03-2014	Project no: 000.145	
Approved by: AW	06-03-2014	Company: TenneT	

Description: Wintrack Masttype ZWM6S350

Revision: 3.0

Format: A3

DNV KEMA Energy & Sustainability, Utrechtseweg 310, 6812 AR Arnhem, tel: +31 26 3 56 91 11, www.dnvkema.com

© 2014 - Filename: 74102194-035-181 - ZWM6S350 Rev3.0.dwg

ZWW4AA400

Fundatie berekening

Bijlage CAY

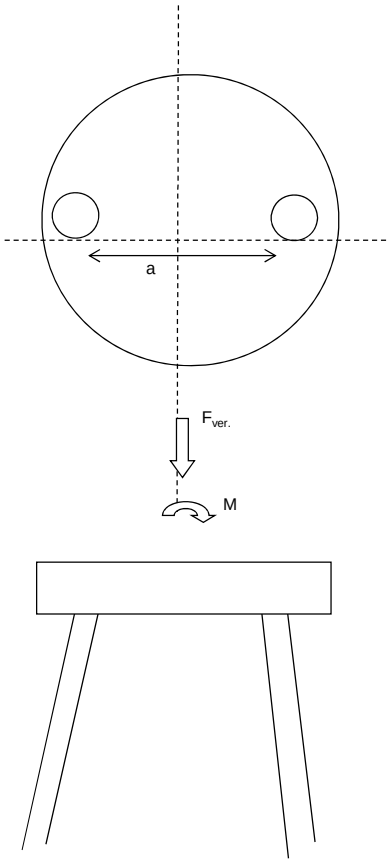

Fundatie ontwerp:
Heipaal

Afmetingen	b	400	mm
	d	400	mm
omtrek paal	$O_{p;gem}$	1.6	m
schoorstand		8	:1
α		7.125	graden
Opstort	Diameter	5.3	m
	Hoogte	1.8	m
	Inhoud	39.7	m^3
	e.g.	953	kN
Onderplaat	Diameter	12.0	m
	Hoogte	1.2	m
	Inhoud	136	m^3
	e.g.	3257	kN
Hart paal tov rand fund.		0.6	m

Optreden krachten

e.g. mast	751	kN
Fgeleiders	163	kN
Maximale dwarskracht	1064	kN
Fmax vert (druk)	1064	kN
Fmin vert (trek)	798	kN
Maximale moment	47979	kNm

Moment

F_{diag}	4775	kN	
F_{hor}	1064	kN	
F_{ver}	4738	kN	
Mhor (tgv Fhor)	3191	kNm	
M_{tot}	51170	kNm	reductie door opwaarste kracht water
F=M/a	4738	kN	

Verticaal reactiekracht

Fwater (trek)	1754	kN	
Fgrond (druk)	2458	kN	
Fgrond (trek)	2048	kN	
Fdmax (druk)	4533	kN	
Ftmax (trek)	2163	kN	
Fdtot (druk)	9271	kN	
Fttot (trek)	2575	kN	
Palen druk	9	(-)	
Palen trek	9	(-)	
Totaal palen	18	(-)	Per fundering

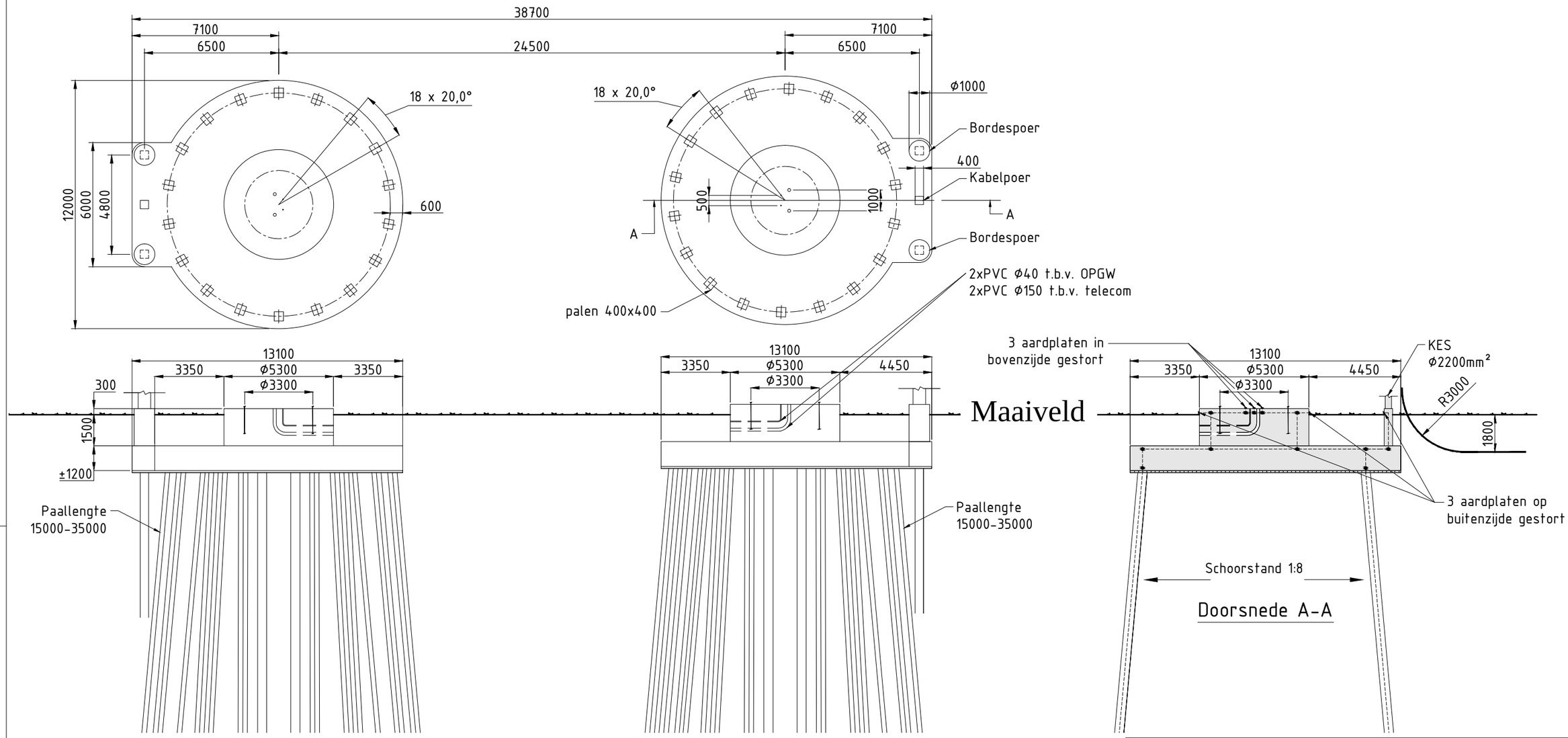

T.B.V. Vergunnings aanvraag

7.0	25-06-2014	Paal-paal afstand aangepast
6.0	02-06-2014	Diverse aanpassingen
5.0	07-04-2014	Diverse aanpassingen

Verklaring

- Gewapend beton
- Werkvloer

Verklaring aarding

- Ringleiding Ø16mm (FeB220) glad
- Koppeling met aardstaaf in paal
- Aardplaten

Opmerkingen

Maten in mm
Coordinaten in mm, in het stelsel van de rijksdriehoekmeting
Maatvoering in het 360 graden stelsel
Vellingkanten niet getekend
Ringleiding in bovenkant poer op het bovennet
plaatsen in de eerste laag
Mastvoetanker afmeting exclusief mastvoetflens breedte
Afmetingen indicatief

KEMA DNV

Projectname: Engineering verbinding ZW380

Third angle projection:

Drawing no.: 74102194-032-401V

Design state: Definitief		Scale: 1:200	
Drawn by: RBE	25-06-2014	Units: mm	
Checked by: AJP	25-06-2014	Project no: 000.145	
Approved by: AW	25-06-2014	Company: TenneT	

Description: Principe ontwerp fundatie hoekmast ZWW4AA400 masten familie

Revision: 7.0

Format: A3

DNV KEMA Energy & Sustainability, Utrechtseweg 310, 6812 AR Arnhem, tel: +31 26 3 56 91 11, www.dnvkema.com

© 2014 - Filename: 74102194-032-401 - ZWW4AA400 Principe ontwerp fundaties_rev7.0.dwg

ZWW4AA400

Loadcases for tower strength (ultimate limit state)

		Ahead			Back		
Loadcase according to 50341-3-15	Att. Point	Vertical [N]	Transversal [N]	Longitudinal [N]	Vertical [N]	Transversal [N]	Longitudinal [N]
NL1/1a	GW / opgw	2313	5642	19572	2313	5642	-19572
Wind, 10°C	150C1F1	8522	20309	71623	8522	20309	-71623
Permanent loads yg= 1.2	150C1F2	8522	20208	71576	8522	20208	-71576
Wind angle: 0°	150C1F3	8522	20082	71524	8522	20082	-71524
	380C2F1	17045	40618	143247	17045	40618	-143247
	380C2F2	17045	40417	143152	17045	40417	-143152
	380C2F3	17045	40164	143048	17045	40164	-143048
	RTG	0	0	0	4620	10939	-38915
NL1/1b	GW / opgw	2312	5979	22016	2312	5979	-22016
Wind, -20°C	150C1F1	8518	22204	82034	8518	22204	-82034
Permanent loads yg= 1.2	150C1F2	8518	22187	82036	8518	22187	-82036
Wind angle: 0°	150C1F3	8518	22165	82038	8518	22165	-82038
	380C2F1	17036	44409	164069	17036	44409	-164069
	380C2F2	17036	44375	164072	17036	44375	-164072
	380C2F3	17036	44331	164076	17036	44331	-164076
	RTG	0	0	0	4618	11791	-43623
NL1/3	GW / opgw	9331	16292	59274	9331	16292	-59274
Wind, -5°C	150C1F1	14688	31519	115300	14688	31519	-115300
Permanent loads yg= 1.2	150C1F2	14688	31470	115301	14688	31470	-115301
Wind angle: 0°	150C1F3	14688	31408	115304	14688	31408	-115304
	380C2F1	29376	63038	230599	29376	63038	-230599
	380C2F2	29376	62940	230602	29376	62940	-230602
	380C2F3	29376	62816	230608	29376	62816	-230608
	RTG	0	0	0	18688	32337	-118727
NL1/4	GW / opgw	3065	6740	24858	3065	6740	-24858
Construction/maintenance, +5°C	150C1F1	10026	22453	82960	10026	22453	-82960
Permanent loads yg= 1.2	150C1F2	10026	22436	82962	10026	22436	-82962
Wind angle: 0°	150C1F3	10026	22414	82965	10026	22414	-82965
	380C2F1	20053	44905	165920	20053	44905	-165920
	380C2F2	20053	44871	165924	20053	44871	-165924
	380C2F3	20053	44828	165930	20053	44828	-165930
	RTG	0	0	0	6124	13407	-49654
NL1/6	GW / opgw	2603	5740	21422	2603	5740	-21422
Permanent, +10°C	150C1F1	9589	21041	78528	9589	21041	-78528
Permanent loads yg= 1.35	150C1F2	9589	21041	78528	9589	21041	-78528
	150C1F3	9589	21041	78528	9589	21041	-78528
	380C2F1	19177	42083	157056	19177	42083	-157056
	380C2F2	19177	42083	157056	19177	42083	-157056
	380C2F3	19177	42083	157056	19177	42083	-157056
	RTG	0	0	0	5198	11469	-42804
NL1/1a	GW / opgw	2314	7341	21850	2315	13636	-34239
Wind, 10°C	150C1F1	8523	24649	76427	8527	41255	-107248
Permanent loads yg= 1.2	150C1F2	8523	24112	75647	8527	39143	-103042
Wind angle: 45°	150C1F3	8523	23449	74733	8526	36475	-97775
	380C2F1	17046	49298	152854	17055	82509	-214495
	380C2F2	17046	48224	151293	17054	78286	-206083
	380C2F3	17046	46898	149466	17052	72950	-195550
	RTG	0	0	0	4622	20280	-54290
NL1/1b	GW / opgw	2312	6214	22081	2312	7032	-22918
Wind, -20°C	150C1F1	8518	22840	82131	8518	24956	-83805
Permanent loads yg= 1.2	150C1F2	8518	22769	82107	8518	24680	-83505
Wind angle: 45°	150C1F3	8518	22678	82081	8518	24336	-83161
	380C2F1	17036	45681	164262	17036	49913	-167610
	380C2F2	17036	45537	164214	17036	49359	-167011
	380C2F3	17036	45356	164162	17036	48672	-166322
	RTG	0	0	0	4618	13016	-44300
NL1/3	GW / opgw	9332	17469	59491	9333	21392	-62725
Wind, -5°C	150C1F1	14688	33360	115804	14690	39726	-122166
Permanent loads yg= 1.2	150C1F2	14688	33148	115699	14689	38885	-121082
Wind angle: 45°	150C1F3	14688	32883	115583	14689	37844	-119815
	380C2F1	29376	66719	231608	29380	79451	-244332
	380C2F2	29376	66297	231398	29379	77771	-242163
	380C2F3	29376	65767	231166	29378	75688	-239630
	RTG	0	0	0	18690	38360	-121234
NL1/4	GW / opgw	3066	6965	24884	3066	7701	-25412
Construction/maintenance, +5°C	150C1F1	10026	23075	83003	10027	25074	-84237
Permanent loads yg= 1.2	150C1F2	10026	23005	82987	10027	24816	-84010
Wind angle: 45°	150C1F3	10026	22917	82972	10026	24495	-83750
	380C2F1	20053	46149	166005	20053	50147	-168475
	380C2F2	20053	46010	165975	20053	49632	-168019
	380C2F3	20053	45834	165943	20053	48990	-167500
	RTG	0	0	0	6124	14552	-50029

NL1/1a	GW / opgw	2316	16038	39137	2316	16038	-39137
Wind, 10°C	150C1F1	8529	47872	120531	8529	47872	-120531
Permanent loads yg= 1.2	150C1F2	8528	45214	115185	8528	45214	-115185
Wind angle: 90°	150C1F3	8527	41832	108401	8527	41832	-108401
	380C2F1	17058	95743	241062	17058	95743	-241062
	380C2F2	17057	90427	230369	17057	90427	-230369
	380C2F3	17055	83663	216802	17055	83663	-216802
	RTG	0	0	0	4623	23333	-60459
NL1/1b	GW / opgw	2312	7388	23436	2312	7388	-23436
Wind, -20°C	150C1F1	8518	25859	84895	8518	25859	-84895
Permanent loads yg= 1.2	150C1F2	8518	25490	84430	8518	25490	-84430
Wind angle: 90°	150C1F3	8518	25033	83891	8518	25033	-83891
	380C2F1	17037	51718	169791	17037	51718	-169791
	380C2F2	17037	50979	168860	17037	50979	-168860
	380C2F3	17036	50066	167782	17036	50066	-167782
	RTG	0	0	0	4618	13411	-44734
NL1/3	GW / opgw	9334	23040	64696	9334	23040	-64696
Wind, -5°C	150C1F1	14691	42459	126000	14691	42459	-126000
Permanent loads yg= 1.2	150C1F2	14690	41342	124384	14690	41342	-124384
Wind angle: 90°	150C1F3	14690	39958	122475	14690	39958	-122475
	380C2F1	29381	84919	252000	29381	84919	-252000
	380C2F2	29381	82685	248768	29381	82685	-248768
	380C2F3	29380	79915	244949	29380	79915	-244949
	RTG	0	0	0	18691	40243	-122907
NL1/4	GW / opgw	3066	8012	25760	3066	8012	-25760
Construction/maintenance, +5°C	150C1F1	10027	25909	85076	10027	25909	-85076
Permanent loads yg= 1.2	150C1F2	10027	25568	84717	10027	25568	-84717
Wind angle: 90°	150C1F3	10027	25145	84303	10027	25145	-84303
	380C2F1	20053	51818	170153	20053	51818	-170153
	380C2F2	20053	51136	169433	20053	51136	-169433
	380C2F3	20053	50290	168606	20053	50290	-168606
	RTG	0	0	0	6124	14905	-50305
NL1/1a	GW / opgw	2315	13636	34239	2314	7341	-21850
Wind, 10°C	150C1F1	8527	41255	107248	8523	24649	-76427
Permanent loads yg= 1.2	150C1F2	8527	39143	103042	8523	24112	-75647
Wind angle: -45°	150C1F3	8526	36475	97775	8523	23449	-74733
	380C2F1	17055	82509	214495	17046	49298	-152854
	380C2F2	17054	78286	206083	17046	48224	-151293
	380C2F3	17052	72950	195550	17046	46898	-149466
	RTG	0	0	0	4620	12848	-40820
NL1/1b	GW / opgw	2312	7032	22918	2312	6214	-22081
Wind, -20°C	150C1F1	8518	24956	83805	8518	22840	-82131
Permanent loads yg= 1.2	150C1F2	8518	24680	83505	8518	22769	-82107
Wind angle: -45°	150C1F3	8518	24336	83161	8518	22678	-82081
	380C2F1	17036	49913	167610	17036	45681	-164262
	380C2F2	17036	49359	167011	17036	45537	-164214
	380C2F3	17036	48672	166322	17036	45356	-164162
	RTG	0	0	0	4618	12078	-43652
NL1/3	GW / opgw	9333	21392	62725	9332	17469	-59491
Wind, -5°C	150C1F1	14690	39726	122166	14688	33360	-115804
Permanent loads yg= 1.2	150C1F2	14689	38885	121082	14688	33148	-115699
Wind angle: -45°	150C1F3	14689	37844	119815	14688	32883	-115583
	380C2F1	29380	79451	244332	29376	66719	-231608
	380C2F2	29379	77771	242163	29376	66297	-231398
	380C2F3	29378	75688	239630	29376	65767	-231166
	RTG	0	0	0	18688	33785	-118778
NL1/4	GW / opgw	3066	7701	25412	3066	6965	-24884
Construction/maintenance, +5°C	150C1F1	10027	25074	84237	10026	23075	-83003
Permanent loads yg= 1.2	150C1F2	10027	24816	84010	10026	23005	-82987
Wind angle: -45°	150C1F3	10026	24495	83750	10026	22917	-82972
	380C2F1	20053	50147	168475	20053	46149	-166005
	380C2F2	20053	49632	168019	20053	46010	-165975
	380C2F3	20053	48990	167500	20053	45834	-165943
	RTG	0	0	0	6124	13686	-49651
NL1//1a	GW / opgw	1735	4557	15520	1735	4557	-15520
Wind, 10°C	150C1F1	6390	16356	56872	6390	16356	-56872
Permanent loads yg= 0.9	150C1F2	6390	16247	56795	6390	16247	-56795
Wind angle: 0°	150C1F3	6390	16112	56708	6390	16112	-56708
	380C2F1	12781	32712	113743	12781	32712	-113743
	380C2F2	12781	32495	113589	12781	32495	-113589
	380C2F3	12781	32224	113416	12781	32224	-113416
	RTG	0	0	0	3464	8737	-30698

NL1/1b	GW / opgw	1734	4807	17644	1734	4807	-17644
Wind, -20°C	150C1F1	6387	17993	66318	6387	17993	-66318
Permanent loads yg= 0.9	150C1F2	6387	17976	66318	6387	17976	-66318
Wind angle: 0°	150C1F3	6387	17953	66318	6387	17953	-66318
	380C2F1	12774	35986	132635	12774	35986	-132635
	380C2F2	12774	35951	132635	12774	35951	-132635
	380C2F3	12774	35907	132637	12774	35907	-132637
	RTG	0	0	0	3463	9450	-34887
NL1/3	GW / opgw	8751	15568	56573	8751	15568	-56573
Wind, -5°C	150C1F1	12554	28094	102519	12554	28094	-102519
Permanent loads yg= 0.9	150C1F2	12554	28045	102518	12554	28045	-102518
Wind angle: 0°	150C1F3	12554	27982	102518	12554	27982	-102518
	380C2F1	25109	56188	205038	25109	56188	-205038
	380C2F2	25109	56089	205035	25109	56089	-205035
	380C2F3	25109	55964	205036	25109	55964	-205036
	RTG	0	0	0	17529	30887	-113313
NL1/4	GW / opgw	2487	5711	21016	2487	5711	-21016
Construction/maintenance, +5°C	150C1F1	7894	18612	68628	7894	18612	-68628
Permanent loads yg= 0.9	150C1F2	7894	18595	68629	7894	18595	-68629
Wind angle: 0°	150C1F3	7894	18573	68631	7894	18573	-68631
	380C2F1	15788	37224	137256	15788	37224	-137256
	380C2F2	15788	37190	137258	15788	37190	-137258
	380C2F3	15788	37146	137262	15788	37146	-137262
	RTG	0	0	0	4968	11346	-41962
NL1/6	GW / opgw	1735	4102	15307	1735	4102	-15307
Permanent, +10°C	150C1F1	6390	15137	56492	6390	15137	-56492
Permanent loads yg= 0.9	150C1F2	6390	15137	56492	6390	15137	-56492
	150C1F3	6390	15137	56492	6390	15137	-56492
	380C2F1	12781	30274	112983	12781	30274	-112983
	380C2F2	12781	30274	112983	12781	30274	-112983
	380C2F3	12781	30274	112983	12781	30274	-112983
	RTG	0	0	0	3464	8190	-30564
NL1/1a	GW / opgw	1735	6484	18653	1736	13263	-32850
Wind, 10°C	150C1F1	6391	21253	63754	6395	39507	-100730
Permanent loads yg= 0.9	150C1F2	6391	20639	62687	6394	37259	-96016
Wind angle: 45°	150C1F3	6391	19881	61420	6394	34395	-90018
	380C2F1	12782	42505	127508	12790	79014	-201459
	380C2F2	12782	41278	125374	12789	74519	-192033
	380C2F3	12782	39762	122840	12788	68790	-180036
	RTG	0	0	0	3466	19144	-50054
NL1/1b	GW / opgw	1734	5057	17763	1734	5982	-19000
Wind, -20°C	150C1F1	6387	18659	66528	6387	21016	-69102
Permanent loads yg= 0.9	150C1F2	6387	18583	66485	6387	20701	-68659
Wind angle: 45°	150C1F3	6387	18486	66438	6387	20312	-68144
	380C2F1	12774	37319	133056	12774	42032	-138204
	380C2F2	12774	37165	132971	12774	41402	-137318
	380C2F3	12774	36973	132876	12774	40624	-136288
	RTG	0	0	0	3463	10783	-35969
NL1/3	GW / opgw	8751	16756	56833	8753	20763	-60379
Wind, -5°C	150C1F1	12555	29991	103232	12556	36758	-111097
Permanent loads yg= 0.9	150C1F2	12554	29771	103094	12556	35859	-109790
Wind angle: 45°	150C1F3	12554	29495	102939	12556	34744	-108250
	380C2F1	25109	59981	206465	25112	73517	-222195
	380C2F2	25109	59541	206188	25112	71717	-219580
	380C2F3	25109	58990	205878	25111	69489	-216500
	RTG	0	0	0	17531	36995	-116144
NL1/4	GW / opgw	2487	5942	21067	2487	6730	-21790
Construction/maintenance, +5°C	150C1F1	7894	19253	68740	7894	21403	-70542
Permanent loads yg= 0.9	150C1F2	7894	19180	68714	7894	21121	-70222
Wind angle: 45°	150C1F3	7894	19089	68685	7894	20771	-69853
	380C2F1	15788	38506	137480	15788	42807	-141084
	380C2F2	15788	38360	137427	15788	42242	-140444
	380C2F3	15788	38177	137369	15788	41542	-139707
	RTG	0	0	0	4968	12541	-42527
NL1/1a	GW / opgw	1737	15745	38044	1737	15745	-38044
Wind, 10°C	150C1F1	6396	46464	115283	6396	46464	-115283
Permanent loads yg= 0.9	150C1F2	6396	43683	109477	6396	43683	-109477
Wind angle: 90°	150C1F3	6395	40118	102012	6395	40118	-102012
	380C2F1	12793	92929	230566	12793	92929	-230566
	380C2F2	12791	87366	218954	12791	87366	-218954
	380C2F3	12790	80237	204024	12790	80237	-204024
	RTG	0	0	0	3467	22399	-56976

NL1/1b	GW / opgw	1734	6393	19722	1734	6393	-19722
Wind, -20°C	150C1F1	6387	22050	70684	6387	22050	-70684
Permanent loads yg= 0.9	150C1F2	6387	21626	70014	6387	21626	-70014
Wind angle: 90°	150C1F3	6387	21103	69228	6387	21103	-69228
	380C2F1	12775	44101	141369	12775	44101	-141369
	380C2F2	12775	43253	140028	12775	43253	-140028
	380C2F3	12775	42207	138457	12775	42207	-138457
	RTG	0	0	0	3463	11234	-36607
NL1/3	GW / opgw	8754	22451	62501	8754	22451	-62501
Wind, -5°C	150C1F1	12557	39686	115656	12557	39686	-115656
Permanent loads yg= 0.9	150C1F2	12557	38491	113745	12557	38491	-113745
Wind angle: 90°	150C1F3	12556	37007	111468	12556	37007	-111468
	380C2F1	25114	79372	231311	25114	79372	-231311
	380C2F2	25113	76981	227490	25113	76981	-227490
	380C2F3	25113	74015	222935	25113	74015	-222935
	RTG	0	0	0	17532	38920	-117975
NL1/4	GW / opgw	2487	7070	22246	2487	7070	-22246
Construction/maintenance, +5°C	150C1F1	7894	22325	71703	7894	22325	-71703
Permanent loads yg= 0.9	150C1F2	7894	21948	71208	7894	21948	-71208
Wind angle: 90°	150C1F3	7894	21482	70634	7894	21482	-70634
	380C2F1	15789	44650	143406	15789	44650	-143406
	380C2F2	15789	43896	142416	15789	43896	-142416
	380C2F3	15788	42963	141268	15788	42963	-141268
	RTG	0	0	0	4968	12922	-42903
NL1/1a	GW / opgw	1736	13263	32850	1735	6484	-18653
Wind, 10°C	150C1F1	6395	39507	100730	6391	21253	-63754
Permanent loads yg= 0.9	150C1F2	6394	37259	96016	6391	20639	-62687
Wind angle: -45°	150C1F3	6394	34395	90018	6391	19881	-61420
	380C2F1	12790	79014	201459	12782	42505	-127508
	380C2F2	12789	74519	192033	12782	41278	-125374
	380C2F3	12788	68790	180036	12782	39762	-122840
	RTG	0	0	0	3465	10877	-33467
NL1/1b	GW / opgw	1734	5982	19000	1734	5057	-17763
Wind, -20°C	150C1F1	6387	21016	69102	6387	18659	-66528
Permanent loads yg= 0.9	150C1F2	6387	20701	68659	6387	18583	-66485
Wind angle: -45°	150C1F3	6387	20312	68144	6387	18486	-66438
	380C2F1	12774	42032	138204	12774	37319	-133056
	380C2F2	12774	41402	137318	12774	37165	-132971
	380C2F3	12774	40624	136288	12774	36973	-132876
	RTG	0	0	0	3463	9749	-34960
NL1/3	GW / opgw	8753	20763	60379	8751	16756	-56833
Wind, -5°C	150C1F1	12556	36758	111097	12555	29991	-103232
Permanent loads yg= 0.9	150C1F2	12556	35859	109790	12554	29771	-103094
Wind angle: -45°	150C1F3	12556	34744	108250	12554	29495	-102939
	380C2F1	25112	73517	222195	25109	59981	-206465
	380C2F2	25112	71717	219580	25109	59541	-206188
	380C2F3	25111	69489	216500	25109	58990	-205878
	RTG	0	0	0	17529	32344	-113401
NL1/4	GW / opgw	2487	6730	21790	2487	5942	-21067
Construction/maintenance, +5°C	150C1F1	7894	21403	70542	7894	19253	-68740
Permanent loads yg= 0.9	150C1F2	7894	21121	70222	7894	19180	-68714
Wind angle: -45°	150C1F3	7894	20771	69853	7894	19089	-68685
	380C2F1	15788	42807	141084	15788	38506	-137480
	380C2F2	15788	42242	140444	15788	38360	-137427
	380C2F3	15788	41542	139707	15788	38177	-137369
	RTG	0	0	0	4968	11630	-41979

ZWW4AA400

Loadcases for tower strength (Special limit state)

Loadcase according to 50341-3-15	Att. Point	Ahead Vertical [N]	Ahead Transversal [N]	Ahead Longitudinal [N]	Back Vertical [N]	Back Transversal [N]	Back Longitudinal [N]
NL3/1a	GW / opgw	0	0	0	2313	5421	-19460
Wind, 10°C	150C1F1	0	0	0	8522	19719	-71422
Permanent loads yg= 1.2	150C1F2	0	0	0	8522	19671	-71415
Wind angle: 0°	150C1F3	0	0	0	8522	19611	-71408
	380C2F1	0	0	0	17045	39437	-142845
	380C2F2	0	0	0	17045	39342	-142830
	380C2F3	0	0	0	17045	39221	-142815
	RTG	0	0	0	4620	10674	-38843
NL3/1b	GW / opgw	0	0	0	2312	5963	-22016
Wind, -20°C	150C1F1	0	0	0	8518	22161	-82039
Permanent loads yg= 1.2	150C1F2	0	0	0	8518	22147	-82040
Wind angle: 0°	150C1F3	0	0	0	8518	22130	-82043
	380C2F1	0	0	0	17036	44322	-164077
	380C2F2	0	0	0	17036	44295	-164081
	380C2F3	0	0	0	17036	44260	-164085
	RTG	0	0	0	4618	11771	-43625
NL3/3	GW / opgw	0	0	0	3883	8610	-30911
Wind, -5°C	150C1F1	0	0	0	9901	23444	-85630
Permanent loads yg= 1.2	150C1F2	0	0	0	9901	23404	-85628
Wind angle: 0°	150C1F3	0	0	0	9901	23354	-85627
	380C2F1	0	0	0	19802	46887	-171259
	380C2F2	0	0	0	19802	46808	-171256
	380C2F3	0	0	0	19802	46707	-171253
	RTG	0	0	0	7767	16943	-61667
NL3/4	GW / opgw	0	0	0	2915	6463	-23882
Construction/maintenance, +5°C	150C1F1	0	0	0	9725	21883	-81000
Permanent loads yg= 1.2	150C1F2	0	0	0	9725	21869	-81002
Wind angle: 0°	150C1F3	0	0	0	9725	21852	-81005
	380C2F1	0	0	0	19451	43765	-162000
	380C2F2	0	0	0	19451	43738	-162004
	380C2F3	0	0	0	19451	43704	-162010
	RTG	0	0	0	5823	12862	-47696
NL3/1a	GW / opgw	0	0	0	2314	8980	-24860
Wind, 10°C	150C1F1	0	0	0	8524	28843	-83359
Permanent loads yg= 1.2	150C1F2	0	0	0	8524	27877	-81663
Wind angle: 45°	150C1F3	0	0	0	8524	26679	-79631
	380C2F1	0	0	0	17048	57685	-166717
	380C2F2	0	0	0	17048	55754	-163327
	380C2F3	0	0	0	17047	53358	-159262
	RTG	0	0	0	4621	14690	-43701
NL3/1b	GW / opgw	0	0	0	2312	6761	-22572
Wind, -20°C	150C1F1	0	0	0	8518	24266	-83095
Permanent loads yg= 1.2	150C1F2	0	0	0	8518	24058	-82907
Wind angle: 45°	150C1F3	0	0	0	8518	23800	-82693
	380C2F1	0	0	0	17036	48532	-166189
	380C2F2	0	0	0	17036	48117	-165814
	380C2F3	0	0	0	17036	47600	-165386
	RTG	0	0	0	4618	12712	-44021
NL3/3	GW / opgw	0	0	0	3884	13833	-37952
Wind, -5°C	150C1F1	0	0	0	9902	30568	-93216
Permanent loads yg= 1.2	150C1F2	0	0	0	9902	29821	-92068
Wind angle: 45°	150C1F3	0	0	0	9902	28897	-90716
	380C2F1	0	0	0	19805	61135	-186431
	380C2F2	0	0	0	19805	59641	-184137
	380C2F3	0	0	0	19804	57794	-181432
	RTG	0	0	0	7768	22876	-67855
NL3/4	GW / opgw	0	0	0	2915	7208	-24240
Construction/maintenance, +5°C	150C1F1	0	0	0	9726	23915	-81781
Permanent loads yg= 1.2	150C1F2	0	0	0	9725	23718	-81634
Wind angle: 45°	150C1F3	0	0	0	9725	23473	-81468
	380C2F1	0	0	0	19451	47830	-163562
	380C2F2	0	0	0	19451	47436	-163268
	380C2F3	0	0	0	19451	46945	-162935
	RTG	0	0	0	5823	13758	-47923
NL3/1a	GW / opgw	0	0	0	2314	10178	-27217
Wind, 10°C	150C1F1	0	0	0	8525	31968	-89093
Permanent loads yg= 1.2	150C1F2	0	0	0	8525	30695	-86719
Wind angle: 90°	150C1F3	0	0	0	8524	29109	-83834
	380C2F1	0	0	0	17050	63935	-178185
	380C2F2	0	0	0	17049	61390	-173439
	380C2F3	0	0	0	17048	58219	-167668
	RTG	0	0	0	4621	16077	-46164

NL3/1b	GW / opgw	0	0	0	2312	7025	-22909
Wind, -20°C	150C1F1	0	0	0	8518	24939	-83786
Permanent loads yg= 1.2	150C1F2	0	0	0	8518	24664	-83489
Wind angle: 90°	150C1F3	0	0	0	8518	24323	-83149
	380C2F1	0	0	0	17036	49879	-167572
	380C2F2	0	0	0	17036	49328	-166979
	380C2F3	0	0	0	17036	48646	-166297
	RTG	0	0	0	4618	13008	-44292
NL3/3	GW / opgw	0	0	0	3885	15569	-41090
Wind, -5°C	150C1F1	0	0	0	9903	33002	-97207
Permanent loads yg= 1.2	150C1F2	0	0	0	9903	32007	-95535
Wind angle: 90°	150C1F3	0	0	0	9903	30774	-93540
	380C2F1	0	0	0	19806	66003	-194414
	380C2F2	0	0	0	19806	64014	-191070
	380C2F3	0	0	0	19805	61548	-187080
	RTG	0	0	0	7769	24883	-71068
NL3/4	GW / opgw	0	0	0	2915	7446	-24476
Construction/maintenance, +5°C	150C1F1	0	0	0	9726	24550	-82329
Permanent loads yg= 1.2	150C1F2	0	0	0	9726	24291	-82093
Wind angle: 90°	150C1F3	0	0	0	9726	23969	-81824
	380C2F1	0	0	0	19451	49100	-164657
	380C2F2	0	0	0	19451	48582	-164186
	380C2F3	0	0	0	19451	47938	-163647
	RTG	0	0	0	5823	14030	-48105
NL3/1a	GW / opgw	0	0	0	2313	6149	-20066
Wind, 10°C	150C1F1	0	0	0	8523	21624	-72609
Permanent loads yg= 1.2	150C1F2	0	0	0	8523	21397	-72397
Wind angle: -45°	150C1F3	0	0	0	8523	21115	-72156
	380C2F1	0	0	0	17045	43248	-145217
	380C2F2	0	0	0	17045	42794	-144795
	380C2F3	0	0	0	17045	42229	-144312
	RTG	0	0	0	4620	11522	-39293
NL3/1b	GW / opgw	0	0	0	2312	6146	-22050
Wind, -20°C	150C1F1	0	0	0	8518	22659	-82076
Permanent loads yg= 1.2	150C1F2	0	0	0	8518	22603	-82063
Wind angle: -45°	150C1F3	0	0	0	8518	22533	-82050
	380C2F1	0	0	0	17036	45318	-164152
	380C2F2	0	0	0	17036	45207	-164127
	380C2F3	0	0	0	17036	45066	-164100
	RTG	0	0	0	4618	11997	-43633
NL3/3	GW / opgw	0	0	0	3883	9707	-31669
Wind, -5°C	150C1F1	0	0	0	9901	24983	-86283
Permanent loads yg= 1.2	150C1F2	0	0	0	9901	24803	-86159
Wind angle: -45°	150C1F3	0	0	0	9901	24579	-86020
	380C2F1	0	0	0	19803	49966	-172566
	380C2F2	0	0	0	19803	49606	-172319
	380C2F3	0	0	0	19803	49157	-172039
	RTG	0	0	0	7767	18232	-62203
NL3/4	GW / opgw	0	0	0	2915	6640	-23894
Construction/maintenance, +5°C	150C1F1	0	0	0	9725	22373	-81008
Permanent loads yg= 1.2	150C1F2	0	0	0	9725	22319	-81000
Wind angle: -45°	150C1F3	0	0	0	9725	22250	-80992
	380C2F1	0	0	0	19451	44747	-162016
	380C2F2	0	0	0	19451	44637	-162000
	380C2F3	0	0	0	19451	44499	-161985
	RTG	0	0	0	5823	13083	-47686
NL3/1a	GW / opgw	0	0	0	1735	4318	-15341
Wind, 10°C	150C1F1	0	0	0	6390	15727	-56526
Permanent loads yg= 0.9	150C1F2	0	0	0	6390	15677	-56510
Wind angle: 0°	150C1F3	0	0	0	6390	15614	-56493
	380C2F1	0	0	0	12781	31454	-113052
	380C2F2	0	0	0	12781	31354	-113020
	380C2F3	0	0	0	12781	31229	-112987
	RTG	0	0	0	3464	8457	-30569
NL3/1b	GW / opgw	0	0	0	1734	4791	-17643
Wind, -20°C	150C1F1	0	0	0	6387	17949	-66319
Permanent loads yg= 0.9	150C1F2	0	0	0	6387	17935	-66319
Wind angle: 0°	150C1F3	0	0	0	6387	17917	-66321
	380C2F1	0	0	0	12774	35897	-132637
	380C2F2	0	0	0	12774	35870	-132639
	380C2F3	0	0	0	12774	35835	-132641
	RTG	0	0	0	3463	9430	-34888

NL3/3	GW / opgw	0	0	0	3304	7647	-27318
Wind, -5°C	150C1F1	0	0	0	7769	19534	-71039
Permanent loads yg= 0.9	150C1F2	0	0	0	7769	19493	-71033
Wind angle: 0°	150C1F3	0	0	0	7769	19441	-71027
	380C2F1	0	0	0	15538	39068	-142079
	380C2F2	0	0	0	15538	38986	-142066
	380C2F3	0	0	0	15538	38883	-142054
	RTG	0	0	0	6610	15011	-54458
NL3/4	GW / opgw	0	0	0	2336	5417	-19980
Construction/maintenance, +5°C	150C1F1	0	0	0	7593	18004	-66526
Permanent loads yg= 0.9	150C1F2	0	0	0	7593	17991	-66527
Wind angle: 0°	150C1F3	0	0	0	7593	17973	-66529
	380C2F1	0	0	0	15186	36009	-133052
	380C2F2	0	0	0	15186	35981	-133054
	380C2F3	0	0	0	15186	35946	-133059
	RTG	0	0	0	4667	10769	-39885
NL3/1a	GW / opgw	0	0	0	1735	8312	-22368
Wind, 10°C	150C1F1	0	0	0	6392	26006	-72777
Permanent loads yg= 0.9	150C1F2	0	0	0	6392	24920	-70632
Wind angle: 45°	150C1F3	0	0	0	6392	23565	-68013
	380C2F1	0	0	0	12784	52013	-145554
	380C2F2	0	0	0	12784	49840	-141264
	380C2F3	0	0	0	12783	47130	-136026
	RTG	0	0	0	3465	12977	-37311
NL3/1b	GW / opgw	0	0	0	1734	5671	-18504
Wind, -20°C	150C1F1	0	0	0	6387	20232	-68043
Permanent loads yg= 0.9	150C1F2	0	0	0	6387	19999	-67759
Wind angle: 45°	150C1F3	0	0	0	6387	19710	-67430
	380C2F1	0	0	0	12774	40465	-136087
	380C2F2	0	0	0	12774	39998	-135518
	380C2F3	0	0	0	12774	39420	-134861
	RTG	0	0	0	3463	10442	-35549
NL3/3	GW / opgw	0	0	0	3305	13212	-35636
Wind, -5°C	150C1F1	0	0	0	7771	27388	-81353
Permanent loads yg= 0.9	150C1F2	0	0	0	7770	26553	-79875
Wind angle: 45°	150C1F3	0	0	0	7770	25518	-78108
	380C2F1	0	0	0	15541	54776	-162707
	380C2F2	0	0	0	15541	53105	-159750
	380C2F3	0	0	0	15540	51036	-156216
	RTG	0	0	0	6611	21321	-62052
NL3/4	GW / opgw	0	0	0	2336	6206	-20501
Construction/maintenance, +5°C	150C1F1	0	0	0	7593	20156	-67755
Permanent loads yg= 0.9	150C1F2	0	0	0	7593	19942	-67542
Wind angle: 45°	150C1F3	0	0	0	7593	19676	-67299
	380C2F1	0	0	0	15186	40313	-135511
	380C2F2	0	0	0	15186	39884	-135085
	380C2F3	0	0	0	15186	39352	-134597
	RTG	0	0	0	4667	11702	-40251
NL3/1a	GW / opgw	0	0	0	1736	9613	-25111
Wind, 10°C	150C1F1	0	0	0	6393	29481	-79817
Permanent loads yg= 0.9	150C1F2	0	0	0	6393	28073	-76939
Wind angle: 90°	150C1F3	0	0	0	6392	26305	-73373
	380C2F1	0	0	0	12786	58962	-159635
	380C2F2	0	0	0	12785	56147	-153879
	380C2F3	0	0	0	12784	52610	-146746
	RTG	0	0	0	3465	14539	-40424
NL3/1b	GW / opgw	0	0	0	1734	5974	-18987
Wind, -20°C	150C1F1	0	0	0	6387	20997	-69074
Permanent loads yg= 0.9	150C1F2	0	0	0	6387	20683	-68635
Wind angle: 90°	150C1F3	0	0	0	6387	20297	-68125
	380C2F1	0	0	0	12774	41993	-138148
	380C2F2	0	0	0	12774	41367	-137270
	380C2F3	0	0	0	12774	40594	-136250
	RTG	0	0	0	3463	10775	-35958
NL3/3	GW / opgw	0	0	0	3306	15037	-39110
Wind, -5°C	150C1F1	0	0	0	7771	30099	-86377
Permanent loads yg= 0.9	150C1F2	0	0	0	7771	28994	-84294
Wind angle: 90°	150C1F3	0	0	0	7771	27619	-81769
	380C2F1	0	0	0	15542	60198	-172755
	380C2F2	0	0	0	15542	57987	-168588
	380C2F3	0	0	0	15541	55238	-163537
	RTG	0	0	0	6612	23468	-65790

NL3/4	GW / opgw	0	0	0	2336	6466	-20820
Construction/maintenance, +5°C	150C1F1	0	0	0	7593	20854	-68536
Permanent loads yg= 0.9	150C1F2	0	0	0	7593	20569	-68202
Wind angle: 90°	150C1F3	0	0	0	7593	20216	-67817
	380C2F1	0	0	0	15187	41708	-137072
	380C2F2	0	0	0	15187	41137	-136404
	380C2F3	0	0	0	15186	40431	-135633
	RTG	0	0	0	4667	11994	-40507
NL3/1a	GW / opgw	0	0	0	1735	5126	-16245
Wind, 10°C	150C1F1	0	0	0	6391	17810	-58375
Permanent loads yg= 0.9	150C1F2	0	0	0	6391	17555	-58061
Wind angle: -45°	150C1F3	0	0	0	6391	17240	-57698
	380C2F1	0	0	0	12781	35619	-116750
	380C2F2	0	0	0	12781	35110	-116122
	380C2F3	0	0	0	12781	34481	-115397
	RTG	0	0	0	3464	9375	-31283
NL3/1b	GW / opgw	0	0	0	1734	4983	-17711
Wind, -20°C	150C1F1	0	0	0	6387	18466	-66429
Permanent loads yg= 0.9	150C1F2	0	0	0	6387	18407	-66405
Wind angle: -45°	150C1F3	0	0	0	6387	18333	-66378
	380C2F1	0	0	0	12774	36933	-132858
	380C2F2	0	0	0	12774	36815	-132809
	380C2F3	0	0	0	12774	36666	-132755
	RTG	0	0	0	3463	9663	-34924
NL3/3	GW / opgw	0	0	0	3304	8802	-28293
Wind, -5°C	150C1F1	0	0	0	7769	21169	-72052
Permanent loads yg= 0.9	150C1F2	0	0	0	7769	20974	-71871
Wind angle: -45°	150C1F3	0	0	0	7769	20732	-71665
	380C2F1	0	0	0	15539	42338	-144103
	380C2F2	0	0	0	15539	41948	-143742
	380C2F3	0	0	0	15539	41464	-143329
	RTG	0	0	0	6610	16350	-55181
NL3/4	GW / opgw	0	0	0	2336	5599	-20009
Construction/maintenance, +5°C	150C1F1	0	0	0	7593	18508	-66582
Permanent loads yg= 0.9	150C1F2	0	0	0	7593	18451	-66566
Wind angle: -45°	150C1F3	0	0	0	7593	18380	-66549
	380C2F1	0	0	0	15186	37015	-133164
	380C2F2	0	0	0	15186	36902	-133132
	380C2F3	0	0	0	15186	36759	-133099
	RTG	0	0	0	4667	10994	-39889

		Ahead			Back		
Loadcase according to 50341-3-15	Att. Point	Vertical [N]	Transversal [N]	Longitudinal [N]	Vertical [N]	Transversal [N]	Longitudinal [N]
NL3/1a	GW / opgw	2313	5421	19460	0	0	0
Wind, 10°C	150C1F1	8522	19719	71422	0	0	0
Permanent loads yg= 1.2	150C1F2	8522	19671	71415	0	0	0
Wind angle: 0°	150C1F3	8522	19611	71408	0	0	0
	380C2F1	17045	39437	142845	0	0	0
	380C2F2	17045	39342	142830	0	0	0
	380C2F3	17045	39221	142815	0	0	0
	RTG	0	0	0	0	0	0
NL3/1b	GW / opgw	2312	5963	22016	0	0	0
Wind, -20°C	150C1F1	8518	22161	82039	0	0	0
Permanent loads yg= 1.2	150C1F2	8518	22147	82040	0	0	0
Wind angle: 0°	150C1F3	8518	22130	82043	0	0	0
	380C2F1	17036	44322	164077	0	0	0
	380C2F2	17036	44295	164081	0	0	0
	380C2F3	17036	44260	164085	0	0	0
	RTG	0	0	0	0	0	0
NL3/3	GW / opgw	3883	8610	30911	0	0	0
Wind, -5°C	150C1F1	9901	23444	85630	0	0	0
Permanent loads yg= 1.2	150C1F2	9901	23404	85628	0	0	0
Wind angle: 0°	150C1F3	9901	23354	85627	0	0	0
	380C2F1	19802	46887	171259	0	0	0
	380C2F2	19802	46808	171256	0	0	0
	380C2F3	19802	46707	171253	0	0	0
	RTG	0	0	0	0	0	0
NL3/4	GW / opgw	2915	6463	23882	0	0	0
Construction/maintenance, +5°C	150C1F1	9725	21883	81000	0	0	0
Permanent loads yg= 1.2	150C1F2	9725	21869	81002	0	0	0
Wind angle: 0°	150C1F3	9725	21852	81005	0	0	0
	380C2F1	19451	43765	162000	0	0	0
	380C2F2	19451	43738	162004	0	0	0
	380C2F3	19451	43704	162010	0	0	0
	RTG	0	0	0	0	0	0
NL3/1a	GW / opgw	2313	6149	20066	0	0	0
Wind, 10°C	150C1F1	8523	21624	72609	0	0	0
Permanent loads yg= 1.2	150C1F2	8523	21397	72397	0	0	0
Wind angle: 45°	150C1F3	8523	21115	72156	0	0	0
	380C2F1	17045	43248	145217	0	0	0
	380C2F2	17045	42794	144795	0	0	0
	380C2F3	17045	42229	144312	0	0	0
	RTG	0	0	0	0	0	0
NL3/1b	GW / opgw	2312	6146	22050	0	0	0
Wind, -20°C	150C1F1	8518	22659	82076	0	0	0
Permanent loads yg= 1.2	150C1F2	8518	22603	82063	0	0	0
Wind angle: 45°	150C1F3	8518	22533	82050	0	0	0
	380C2F1	17036	45318	164152	0	0	0
	380C2F2	17036	45207	164127	0	0	0
	380C2F3	17036	45066	164100	0	0	0
	RTG	0	0	0	0	0	0
NL3/3	GW / opgw	3883	9707	31669	0	0	0
Wind, -5°C	150C1F1	9901	24983	86283	0	0	0
Permanent loads yg= 1.2	150C1F2	9901	24803	86159	0	0	0
Wind angle: 45°	150C1F3	9901	24579	86020	0	0	0
	380C2F1	19803	49966	172566	0	0	0
	380C2F2	19803	49606	172319	0	0	0
	380C2F3	19803	49157	172039	0	0	0
	RTG	0	0	0	0	0	0
NL3/4	GW / opgw	2915	6640	23894	0	0	0
Construction/maintenance, +5°C	150C1F1	9725	22373	81008	0	0	0
Permanent loads yg= 1.2	150C1F2	9725	22319	81000	0	0	0
Wind angle: 45°	150C1F3	9725	22250	80992	0	0	0
	380C2F1	19451	44747	162016	0	0	0
	380C2F2	19451	44637	162000	0	0	0
	380C2F3	19451	44499	161985	0	0	0
	RTG	0	0	0	0	0	0
NL3/1a	GW / opgw	2314	10178	27217	0	0	0
Wind, 10°C	150C1F1	8525	31968	89093	0	0	0
Permanent loads yg= 1.2	150C1F2	8525	30695	86719	0	0	0
Wind angle: 90°	150C1F3	8524	29109	83834	0	0	0
	380C2F1	17050	63935	178185	0	0	0
	380C2F2	17049	61390	173439	0	0	0
	380C2F3	17048	58219	167668	0	0	0
	RTG	0	0	0	0	0	0

NL3/1b	GW / opgw	2312	7025	22909	0	0	0
Wind, -20°C	150C1F1	8518	24939	83786	0	0	0
Permanent loads yg= 1.2	150C1F2	8518	24664	83489	0	0	0
Wind angle: 90°	150C1F3	8518	24323	83149	0	0	0
	380C2F1	17036	49879	167572	0	0	0
	380C2F2	17036	49328	166979	0	0	0
	380C2F3	17036	48646	166297	0	0	0
	RTG	0	0	0	0	0	0
NL3/3	GW / opgw	3885	15569	41090	0	0	0
Wind, -5°C	150C1F1	9903	33002	97207	0	0	0
Permanent loads yg= 1.2	150C1F2	9903	32007	95535	0	0	0
Wind angle: 90°	150C1F3	9903	30774	93540	0	0	0
	380C2F1	19806	66003	194414	0	0	0
	380C2F2	19806	64014	191070	0	0	0
	380C2F3	19805	61548	187080	0	0	0
	RTG	0	0	0	0	0	0
NL3/4	GW / opgw	2915	7446	24476	0	0	0
Construction/maintenance, +5°C	150C1F1	9726	24550	82329	0	0	0
Permanent loads yg= 1.2	150C1F2	9726	24291	82093	0	0	0
Wind angle: 90°	150C1F3	9726	23969	81824	0	0	0
	380C2F1	19451	49100	164657	0	0	0
	380C2F2	19451	48582	164186	0	0	0
	380C2F3	19451	47938	163647	0	0	0
	RTG	0	0	0	0	0	0
NL3/1a	GW / opgw	2314	8980	24860	0	0	0
Wind, 10°C	150C1F1	8524	28843	83359	0	0	0
Permanent loads yg= 1.2	150C1F2	8524	27877	81663	0	0	0
Wind angle: -45°	150C1F3	8524	26679	79631	0	0	0
	380C2F1	17048	57685	166717	0	0	0
	380C2F2	17048	55754	163327	0	0	0
	380C2F3	17047	53358	159262	0	0	0
	RTG	0	0	0	0	0	0
NL3/1b	GW / opgw	2312	6761	22572	0	0	0
Wind, -20°C	150C1F1	8518	24266	83095	0	0	0
Permanent loads yg= 1.2	150C1F2	8518	24058	82907	0	0	0
Wind angle: -45°	150C1F3	8518	23800	82693	0	0	0
	380C2F1	17036	48532	166189	0	0	0
	380C2F2	17036	48117	165814	0	0	0
	380C2F3	17036	47600	165386	0	0	0
	RTG	0	0	0	0	0	0
NL3/3	GW / opgw	3884	13833	37952	0	0	0
Wind, -5°C	150C1F1	9902	30568	93216	0	0	0
Permanent loads yg= 1.2	150C1F2	9902	29821	92068	0	0	0
Wind angle: -45°	150C1F3	9902	28897	90716	0	0	0
	380C2F1	19805	61135	186431	0	0	0
	380C2F2	19805	59641	184137	0	0	0
	380C2F3	19804	57794	181432	0	0	0
	RTG	0	0	0	0	0	0
NL3/4	GW / opgw	2915	7208	24240	0	0	0
Construction/maintenance, +5°C	150C1F1	9726	23915	81781	0	0	0
Permanent loads yg= 1.2	150C1F2	9725	23718	81634	0	0	0
Wind angle: -45°	150C1F3	9725	23473	81468	0	0	0
	380C2F1	19451	47830	163562	0	0	0
	380C2F2	19451	47436	163268	0	0	0
	380C2F3	19451	46945	162935	0	0	0
	RTG	0	0	0	0	0	0
NL3/1a	GW / opgw	1735	4318	15341	0	0	0
Wind, 10°C	150C1F1	6390	15727	56526	0	0	0
Permanent loads yg= 0.9	150C1F2	6390	15677	56510	0	0	0
Wind angle: 0°	150C1F3	6390	15614	56493	0	0	0
	380C2F1	12781	31454	113052	0	0	0
	380C2F2	12781	31354	113020	0	0	0
	380C2F3	12781	31229	112987	0	0	0
	RTG	0	0	0	0	0	0
NL3/1b	GW / opgw	1734	4791	17643	0	0	0
Wind, -20°C	150C1F1	6387	17949	66319	0	0	0
Permanent loads yg= 0.9	150C1F2	6387	17935	66319	0	0	0
Wind angle: 0°	150C1F3	6387	17917	66321	0	0	0
	380C2F1	12774	35897	132637	0	0	0
	380C2F2	12774	35870	132639	0	0	0
	380C2F3	12774	35835	132641	0	0	0
	RTG	0	0	0	0	0	0

NL3/3	GW / opgw	3304	7647	27318	0	0	0
Wind, -5°C	150C1F1	7769	19534	71039	0	0	0
Permanent loads yg= 0.9	150C1F2	7769	19493	71033	0	0	0
Wind angle: 0°	150C1F3	7769	19441	71027	0	0	0
	380C2F1	15538	39068	142079	0	0	0
	380C2F2	15538	38986	142066	0	0	0
	380C2F3	15538	38883	142054	0	0	0
	RTG	0	0	0	0	0	0
NL3/4	GW / opgw	2336	5417	19980	0	0	0
Construction/maintenance, +5°C	150C1F1	7593	18004	66526	0	0	0
Permanent loads yg= 0.9	150C1F2	7593	17991	66527	0	0	0
Wind angle: 0°	150C1F3	7593	17973	66529	0	0	0
	380C2F1	15186	36009	133052	0	0	0
	380C2F2	15186	35981	133054	0	0	0
	380C2F3	15186	35946	133059	0	0	0
	RTG	0	0	0	0	0	0
NL3/1a	GW / opgw	1735	5126	16245	0	0	0
Wind, 10°C	150C1F1	6391	17810	58375	0	0	0
Permanent loads yg= 0.9	150C1F2	6391	17555	58061	0	0	0
Wind angle: 45°	150C1F3	6391	17240	57698	0	0	0
	380C2F1	12781	35619	116750	0	0	0
	380C2F2	12781	35110	116122	0	0	0
	380C2F3	12781	34481	115397	0	0	0
	RTG	0	0	0	0	0	0
NL3/1b	GW / opgw	1734	4983	17711	0	0	0
Wind, -20°C	150C1F1	6387	18466	66429	0	0	0
Permanent loads yg= 0.9	150C1F2	6387	18407	66405	0	0	0
Wind angle: 45°	150C1F3	6387	18333	66378	0	0	0
	380C2F1	12774	36933	132858	0	0	0
	380C2F2	12774	36815	132809	0	0	0
	380C2F3	12774	36666	132755	0	0	0
	RTG	0	0	0	0	0	0
NL3/3	GW / opgw	3304	8802	28293	0	0	0
Wind, -5°C	150C1F1	7769	21169	72052	0	0	0
Permanent loads yg= 0.9	150C1F2	7769	20974	71871	0	0	0
Wind angle: 45°	150C1F3	7769	20732	71665	0	0	0
	380C2F1	15539	42338	144103	0	0	0
	380C2F2	15539	41948	143742	0	0	0
	380C2F3	15539	41464	143329	0	0	0
	RTG	0	0	0	0	0	0
NL3/4	GW / opgw	2336	5599	20009	0	0	0
Construction/maintenance, +5°C	150C1F1	7593	18508	66582	0	0	0
Permanent loads yg= 0.9	150C1F2	7593	18451	66566	0	0	0
Wind angle: 45°	150C1F3	7593	18380	66549	0	0	0
	380C2F1	15186	37015	133164	0	0	0
	380C2F2	15186	36902	133132	0	0	0
	380C2F3	15186	36759	133099	0	0	0
	RTG	0	0	0	0	0	0
NL3/1a	GW / opgw	1736	9613	25111	0	0	0
Wind, 10°C	150C1F1	6393	29481	79817	0	0	0
Permanent loads yg= 0.9	150C1F2	6393	28073	76939	0	0	0
Wind angle: 90°	150C1F3	6392	26305	73373	0	0	0
	380C2F1	12786	58962	159635	0	0	0
	380C2F2	12785	56147	153879	0	0	0
	380C2F3	12784	52610	146746	0	0	0
	RTG	0	0	0	0	0	0
NL3/1b	GW / opgw	1734	5974	18987	0	0	0
Wind, -20°C	150C1F1	6387	20997	69074	0	0	0
Permanent loads yg= 0.9	150C1F2	6387	20683	68635	0	0	0
Wind angle: 90°	150C1F3	6387	20297	68125	0	0	0
	380C2F1	12774	41993	138148	0	0	0
	380C2F2	12774	41367	137270	0	0	0
	380C2F3	12774	40594	136250	0	0	0
	RTG	0	0	0	0	0	0
NL3/3	GW / opgw	3306	15037	39110	0	0	0
Wind, -5°C	150C1F1	7771	30099	86377	0	0	0
Permanent loads yg= 0.9	150C1F2	7771	28994	84294	0	0	0
Wind angle: 90°	150C1F3	7771	27619	81769	0	0	0
	380C2F1	15542	60198	172755	0	0	0
	380C2F2	15542	57987	168588	0	0	0
	380C2F3	15541	55238	163537	0	0	0
	RTG	0	0	0	0	0	0

NL3/4	GW / opgw	2336	6466	20820	0	0	0
Construction/maintenance, +5°C	150C1F1	7593	20854	68536	0	0	0
Permanent loads yg= 0.9	150C1F2	7593	20569	68202	0	0	0
Wind angle: 90°	150C1F3	7593	20216	67817	0	0	0
	380C2F1	15187	41708	137072	0	0	0
	380C2F2	15187	41137	136404	0	0	0
	380C2F3	15186	40431	135633	0	0	0
	RTG	0	0	0	0	0	0
NL3/1a	GW / opgw	1735	8312	22368	0	0	0
Wind, 10°C	150C1F1	6392	26006	72777	0	0	0
Permanent loads yg= 0.9	150C1F2	6392	24920	70632	0	0	0
Wind angle: -45°	150C1F3	6392	23565	68013	0	0	0
	380C2F1	12784	52013	145554	0	0	0
	380C2F2	12784	49840	141264	0	0	0
	380C2F3	12783	47130	136026	0	0	0
	RTG	0	0	0	0	0	0
NL3/1b	GW / opgw	1734	5671	18504	0	0	0
Wind, -20°C	150C1F1	6387	20232	68043	0	0	0
Permanent loads yg= 0.9	150C1F2	6387	19999	67759	0	0	0
Wind angle: -45°	150C1F3	6387	19710	67430	0	0	0
	380C2F1	12774	40465	136087	0	0	0
	380C2F2	12774	39998	135518	0	0	0
	380C2F3	12774	39420	134861	0	0	0
	RTG	0	0	0	0	0	0
NL3/3	GW / opgw	3305	13212	35636	0	0	0
Wind, -5°C	150C1F1	7771	27388	81353	0	0	0
Permanent loads yg= 0.9	150C1F2	7770	26553	79875	0	0	0
Wind angle: -45°	150C1F3	7770	25518	78108	0	0	0
	380C2F1	15541	54776	162707	0	0	0
	380C2F2	15541	53105	159750	0	0	0
	380C2F3	15540	51036	156216	0	0	0
	RTG	0	0	0	0	0	0
NL3/4	GW / opgw	2336	6206	20501	0	0	0
Construction/maintenance, +5°C	150C1F1	7593	20156	67755	0	0	0
Permanent loads yg= 0.9	150C1F2	7593	19942	67542	0	0	0
Wind angle: -45°	150C1F3	7593	19676	67299	0	0	0
	380C2F1	15186	40313	135511	0	0	0
	380C2F2	15186	39884	135085	0	0	0
	380C2F3	15186	39352	134597	0	0	0
	RTG	0	0	0	0	0	0

		Ahead			Back		
Loadcase according to 50341-3-15	Att. Point	Vertical [N]	Transversal [N]	Longitudinal [N]	Vertical [N]	Transversal [N]	Longitudinal [N]
NL3/1a	GW / opgw	2313	5421	19460	2313	5421	-19460
Wind, 10°C	150C1F1	8522	19719	71422	8522	19719	-71422
Permanent loads yg= 1.2	150C1F2	8522	19671	71415	8522	19671	-71415
Wind angle: 0°	150C1F3	8522	19611	71408	8522	19611	-71408
	380C2F1	0	0	0	0	0	0
	380C2F2	0	0	0	0	0	0
	380C2F3	0	0	0	0	0	0
	RTG	0	0	0	0	0	0
NL3/1b	GW / opgw	2312	5963	22016	2312	5963	-22016
Wind, -20°C	150C1F1	8518	22161	82039	8518	22161	-82039
Permanent loads yg= 1.2	150C1F2	8518	22147	82040	8518	22147	-82040
Wind angle: 0°	150C1F3	8518	22130	82043	8518	22130	-82043
	380C2F1	0	0	0	0	0	0
	380C2F2	0	0	0	0	0	0
	380C2F3	0	0	0	0	0	0
	RTG	0	0	0	0	0	0
NL3/3	GW / opgw	3883	8610	30911	3883	8610	-30911
Wind, -5°C	150C1F1	9901	23444	85630	9901	23444	-85630
Permanent loads yg= 1.2	150C1F2	9901	23404	85628	9901	23404	-85628
Wind angle: 0°	150C1F3	9901	23354	85627	9901	23354	-85627
	380C2F1	0	0	0	0	0	0
	380C2F2	0	0	0	0	0	0
	380C2F3	0	0	0	0	0	0
	RTG	0	0	0	0	0	0
NL3/4	GW / opgw	2915	6463	23882	2915	6463	-23882
Construction/maintenance, +5°C	150C1F1	9725	21883	81000	9725	21883	-81000
Permanent loads yg= 1.2	150C1F2	9725	21869	81002	9725	21869	-81002
Wind angle: 0°	150C1F3	9725	21852	81005	9725	21852	-81005
	380C2F1	0	0	0	0	0	0
	380C2F2	0	0	0	0	0	0
	380C2F3	0	0	0	0	0	0
	RTG	0	0	0	0	0	0
NL3/1a	GW / opgw	2313	6149	20066	2314	8980	-24860
Wind, 10°C	150C1F1	8523	21624	72609	8524	28843	-83359
Permanent loads yg= 1.2	150C1F2	8523	21397	72397	8524	27877	-81663
Wind angle: 45°	150C1F3	8523	21115	72156	8524	26679	-79631
	380C2F1	0	0	0	0	0	0
	380C2F2	0	0	0	0	0	0
	380C2F3	0	0	0	0	0	0
	RTG	0	0	0	0	0	0
NL3/1b	GW / opgw	2312	6146	22050	2312	6761	-22572
Wind, -20°C	150C1F1	8518	22659	82076	8518	24266	-83095
Permanent loads yg= 1.2	150C1F2	8518	22603	82063	8518	24058	-82907
Wind angle: 45°	150C1F3	8518	22533	82050	8518	23800	-82693
	380C2F1	0	0	0	0	0	0
	380C2F2	0	0	0	0	0	0
	380C2F3	0	0	0	0	0	0
	RTG	0	0	0	0	0	0
NL3/3	GW / opgw	3883	9707	31669	3884	13833	-37952
Wind, -5°C	150C1F1	9901	24983	86283	9902	30568	-93216
Permanent loads yg= 1.2	150C1F2	9901	24803	86159	9902	29821	-92068
Wind angle: 45°	150C1F3	9901	24579	86020	9902	28897	-90716
	380C2F1	0	0	0	0	0	0
	380C2F2	0	0	0	0	0	0
	380C2F3	0	0	0	0	0	0
	RTG	0	0	0	0	0	0
NL3/4	GW / opgw	2915	6640	23894	2915	7208	-24240
Construction/maintenance, +5°C	150C1F1	9725	22373	81008	9726	23915	-81781
Permanent loads yg= 1.2	150C1F2	9725	22319	81000	9725	23718	-81634
Wind angle: 45°	150C1F3	9725	22250	80992	9725	23473	-81468
	380C2F1	0	0	0	0	0	0
	380C2F2	0	0	0	0	0	0
	380C2F3	0	0	0	0	0	0
	RTG	0	0	0	0	0	0
NL3/1a	GW / opgw	2314	10178	27217	2314	10178	-27217
Wind, 10°C	150C1F1	8525	31968	89093	8525	31968	-89093
Permanent loads yg= 1.2	150C1F2	8525	30695	86719	8525	30695	-86719
Wind angle: 90°	150C1F3	8524	29109	83834	8524	29109	-83834
	380C2F1	0	0	0	0	0	0
	380C2F2	0	0	0	0	0	0
	380C2F3	0	0	0	0	0	0
	RTG	0	0	0	0	0	0

NL3/1b	GW / opgw	2312	7025	22909	2312	7025	-22909
Wind, -20°C	150C1F1	8518	24939	83786	8518	24939	-83786
Permanent loads yg= 1.2	150C1F2	8518	24664	83489	8518	24664	-83489
Wind angle: 90°	150C1F3	8518	24323	83149	8518	24323	-83149
	380C2F1	0	0	0	0	0	0
	380C2F2	0	0	0	0	0	0
	380C2F3	0	0	0	0	0	0
	RTG	0	0	0	0	0	0
NL3/3	GW / opgw	3885	15569	41090	3885	15569	-41090
Wind, -5°C	150C1F1	9903	33002	97207	9903	33002	-97207
Permanent loads yg= 1.2	150C1F2	9903	32007	95535	9903	32007	-95535
Wind angle: 90°	150C1F3	9903	30774	93540	9903	30774	-93540
	380C2F1	0	0	0	0	0	0
	380C2F2	0	0	0	0	0	0
	380C2F3	0	0	0	0	0	0
	RTG	0	0	0	0	0	0
NL3/4	GW / opgw	2915	7446	24476	2915	7446	-24476
Construction/maintenance, +5°C	150C1F1	9726	24550	82329	9726	24550	-82329
Permanent loads yg= 1.2	150C1F2	9726	24291	82093	9726	24291	-82093
Wind angle: 90°	150C1F3	9726	23969	81824	9726	23969	-81824
	380C2F1	0	0	0	0	0	0
	380C2F2	0	0	0	0	0	0
	380C2F3	0	0	0	0	0	0
	RTG	0	0	0	0	0	0
NL3/1a	GW / opgw	2314	8980	24860	2313	6149	-20066
Wind, 10°C	150C1F1	8524	28843	83359	8523	21624	-72609
Permanent loads yg= 1.2	150C1F2	8524	27877	81663	8523	21397	-72397
Wind angle: -45°	150C1F3	8524	26679	79631	8523	21115	-72156
	380C2F1	0	0	0	0	0	0
	380C2F2	0	0	0	0	0	0
	380C2F3	0	0	0	0	0	0
	RTG	0	0	0	0	0	0
NL3/1b	GW / opgw	2312	6761	22572	2312	6146	-22050
Wind, -20°C	150C1F1	8518	24266	83095	8518	22659	-82076
Permanent loads yg= 1.2	150C1F2	8518	24058	82907	8518	22603	-82063
Wind angle: -45°	150C1F3	8518	23800	82693	8518	22533	-82050
	380C2F1	0	0	0	0	0	0
	380C2F2	0	0	0	0	0	0
	380C2F3	0	0	0	0	0	0
	RTG	0	0	0	0	0	0
NL3/3	GW / opgw	3884	13833	37952	3883	9707	-31669
Wind, -5°C	150C1F1	9902	30568	93216	9901	24983	-86283
Permanent loads yg= 1.2	150C1F2	9902	29821	92068	9901	24803	-86159
Wind angle: -45°	150C1F3	9902	28897	90716	9901	24579	-86020
	380C2F1	0	0	0	0	0	0
	380C2F2	0	0	0	0	0	0
	380C2F3	0	0	0	0	0	0
	RTG	0	0	0	0	0	0
NL3/4	GW / opgw	2915	7208	24240	2915	6640	-23894
Construction/maintenance, +5°C	150C1F1	9726	23915	81781	9725	22373	-81008
Permanent loads yg= 1.2	150C1F2	9725	23718	81634	9725	22319	-81000
Wind angle: -45°	150C1F3	9725	23473	81468	9725	22250	-80992
	380C2F1	0	0	0	0	0	0
	380C2F2	0	0	0	0	0	0
	380C2F3	0	0	0	0	0	0
	RTG	0	0	0	0	0	0
NL3/1a	GW / opgw	1735	4318	15341	1735	4318	-15341
Wind, 10°C	150C1F1	6390	15727	56526	6390	15727	-56526
Permanent loads yg= 0.9	150C1F2	6390	15677	56510	6390	15677	-56510
Wind angle: 0°	150C1F3	6390	15614	56493	6390	15614	-56493
	380C2F1	0	0	0	0	0	0
	380C2F2	0	0	0	0	0	0
	380C2F3	0	0	0	0	0	0
	RTG	0	0	0	0	0	0
NL3/1b	GW / opgw	1734	4791	17643	1734	4791	-17643
Wind, -20°C	150C1F1	6387	17949	66319	6387	17949	-66319
Permanent loads yg= 0.9	150C1F2	6387	17935	66319	6387	17935	-66319
Wind angle: 0°	150C1F3	6387	17917	66321	6387	17917	-66321
	380C2F1	0	0	0	0	0	0
	380C2F2	0	0	0	0	0	0
	380C2F3	0	0	0	0	0	0
	RTG	0	0	0	0	0	0

NL3/3	GW / opgw	3304	7647	27318	3304	7647	-27318
Wind, -5°C	150C1F1	7769	19534	71039	7769	19534	-71039
Permanent loads yg= 0.9	150C1F2	7769	19493	71033	7769	19493	-71033
Wind angle: 0°	150C1F3	7769	19441	71027	7769	19441	-71027
	380C2F1	0	0	0	0	0	0
	380C2F2	0	0	0	0	0	0
	380C2F3	0	0	0	0	0	0
	RTG	0	0	0	0	0	0
NL3/4	GW / opgw	2336	5417	19980	2336	5417	-19980
Construction/maintenance, +5°C	150C1F1	7593	18004	66526	7593	18004	-66526
Permanent loads yg= 0.9	150C1F2	7593	17991	66527	7593	17991	-66527
Wind angle: 0°	150C1F3	7593	17973	66529	7593	17973	-66529
	380C2F1	0	0	0	0	0	0
	380C2F2	0	0	0	0	0	0
	380C2F3	0	0	0	0	0	0
	RTG	0	0	0	0	0	0
NL3/1a	GW / opgw	1735	5126	16245	1735	8312	-22368
Wind, 10°C	150C1F1	6391	17810	58375	6392	26006	-72777
Permanent loads yg= 0.9	150C1F2	6391	17555	58061	6392	24920	-70632
Wind angle: 45°	150C1F3	6391	17240	57698	6392	23565	-68013
	380C2F1	0	0	0	0	0	0
	380C2F2	0	0	0	0	0	0
	380C2F3	0	0	0	0	0	0
	RTG	0	0	0	0	0	0
NL3/1b	GW / opgw	1734	4983	17711	1734	5671	-18504
Wind, -20°C	150C1F1	6387	18466	66429	6387	20232	-68043
Permanent loads yg= 0.9	150C1F2	6387	18407	66405	6387	19999	-67759
Wind angle: 45°	150C1F3	6387	18333	66378	6387	19710	-67430
	380C2F1	0	0	0	0	0	0
	380C2F2	0	0	0	0	0	0
	380C2F3	0	0	0	0	0	0
	RTG	0	0	0	0	0	0
NL3/3	GW / opgw	3304	8802	28293	3305	13212	-35636
Wind, -5°C	150C1F1	7769	21169	72052	7771	27388	-81353
Permanent loads yg= 0.9	150C1F2	7769	20974	71871	7770	26553	-79875
Wind angle: 45°	150C1F3	7769	20732	71665	7770	25518	-78108
	380C2F1	0	0	0	0	0	0
	380C2F2	0	0	0	0	0	0
	380C2F3	0	0	0	0	0	0
	RTG	0	0	0	0	0	0
NL3/4	GW / opgw	2336	5599	20009	2336	6206	-20501
Construction/maintenance, +5°C	150C1F1	7593	18508	66582	7593	20156	-67755
Permanent loads yg= 0.9	150C1F2	7593	18451	66566	7593	19942	-67542
Wind angle: 45°	150C1F3	7593	18380	66549	7593	19676	-67299
	380C2F1	0	0	0	0	0	0
	380C2F2	0	0	0	0	0	0
	380C2F3	0	0	0	0	0	0
	RTG	0	0	0	0	0	0
NL3/1a	GW / opgw	1736	9613	25111	1736	9613	-25111
Wind, 10°C	150C1F1	6393	29481	79817	6393	29481	-79817
Permanent loads yg= 0.9	150C1F2	6393	28073	76939	6393	28073	-76939
Wind angle: 90°	150C1F3	6392	26305	73373	6392	26305	-73373
	380C2F1	0	0	0	0	0	0
	380C2F2	0	0	0	0	0	0
	380C2F3	0	0	0	0	0	0
	RTG	0	0	0	0	0	0
NL3/1b	GW / opgw	1734	5974	18987	1734	5974	-18987
Wind, -20°C	150C1F1	6387	20997	69074	6387	20997	-69074
Permanent loads yg= 0.9	150C1F2	6387	20683	68635	6387	20683	-68635
Wind angle: 90°	150C1F3	6387	20297	68125	6387	20297	-68125
	380C2F1	0	0	0	0	0	0
	380C2F2	0	0	0	0	0	0
	380C2F3	0	0	0	0	0	0
	RTG	0	0	0	0	0	0
NL3/3	GW / opgw	3306	15037	39110	3306	15037	-39110
Wind, -5°C	150C1F1	7771	30099	86377	7771	30099	-86377
Permanent loads yg= 0.9	150C1F2	7771	28994	84294	7771	28994	-84294
Wind angle: 90°	150C1F3	7771	27619	81769	7771	27619	-81769
	380C2F1	0	0	0	0	0	0
	380C2F2	0	0	0	0	0	0
	380C2F3	0	0	0	0	0	0
	RTG	0	0	0	0	0	0

NL3/4	GW / opgw	2336	6466	20820	2336	6466	-20820
Construction/maintenance, +5°C	150C1F1	7593	20854	68536	7593	20854	-68536
Permanent loads yg= 0.9	150C1F2	7593	20569	68202	7593	20569	-68202
Wind angle: 90°	150C1F3	7593	20216	67817	7593	20216	-67817
	380C2F1	0	0	0	0	0	0
	380C2F2	0	0	0	0	0	0
	380C2F3	0	0	0	0	0	0
	RTG	0	0	0	0	0	0
NL3/1a	GW / opgw	1735	8312	22368	1735	5126	-16245
Wind, 10°C	150C1F1	6392	26006	72777	6391	17810	-58375
Permanent loads yg= 0.9	150C1F2	6392	24920	70632	6391	17555	-58061
Wind angle: -45°	150C1F3	6392	23565	68013	6391	17240	-57698
	380C2F1	0	0	0	0	0	0
	380C2F2	0	0	0	0	0	0
	380C2F3	0	0	0	0	0	0
	RTG	0	0	0	0	0	0
NL3/1b	GW / opgw	1734	5671	18504	1734	4983	-17711
Wind, -20°C	150C1F1	6387	20232	68043	6387	18466	-66429
Permanent loads yg= 0.9	150C1F2	6387	19999	67759	6387	18407	-66405
Wind angle: -45°	150C1F3	6387	19710	67430	6387	18333	-66378
	380C2F1	0	0	0	0	0	0
	380C2F2	0	0	0	0	0	0
	380C2F3	0	0	0	0	0	0
	RTG	0	0	0	0	0	0
NL3/3	GW / opgw	3305	13212	35636	3304	8802	-28293
Wind, -5°C	150C1F1	7771	27388	81353	7769	21169	-72052
Permanent loads yg= 0.9	150C1F2	7770	26553	79875	7769	20974	-71871
Wind angle: -45°	150C1F3	7770	25518	78108	7769	20732	-71665
	380C2F1	0	0	0	0	0	0
	380C2F2	0	0	0	0	0	0
	380C2F3	0	0	0	0	0	0
	RTG	0	0	0	0	0	0
NL3/4	GW / opgw	2336	6206	20501	2336	5599	-20009
Construction/maintenance, +5°C	150C1F1	7593	20156	67755	7593	18508	-66582
Permanent loads yg= 0.9	150C1F2	7593	19942	67542	7593	18451	-66566
Wind angle: -45°	150C1F3	7593	19676	67299	7593	18380	-66549
	380C2F1	0	0	0	0	0	0
	380C2F2	0	0	0	0	0	0
	380C2F3	0	0	0	0	0	0
	RTG	0	0	0	0	0	0

		Ahead			Back		
Loadcase according to 50341-3-15	Att. Point	Vertical [N]	Transversal [N]	Longitudinal [N]	Vertical [N]	Transversal [N]	Longitudinal [N]
NL3/1a	GW / opgw	0	0	0	0	0	0
Wind, 10°C	150C1F1	0	0	0	0	0	0
Permanent loads yg= 1.2	150C1F2	0	0	0	0	0	0
Wind angle: 0°	150C1F3	0	0	0	0	0	0
	380C2F1	17045	39437	142845	17045	39437	-142845
	380C2F2	17045	39342	142830	17045	39342	-142830
	380C2F3	17045	39221	142815	17045	39221	-142815
	RTG	0	0	0	4620	10674	-38843
NL3/1b	GW / opgw	0	0	0	0	0	0
Wind, -20°C	150C1F1	0	0	0	0	0	0
Permanent loads yg= 1.2	150C1F2	0	0	0	0	0	0
Wind angle: 0°	150C1F3	0	0	0	0	0	0
	380C2F1	17036	44322	164077	17036	44322	-164077
	380C2F2	17036	44295	164081	17036	44295	-164081
	380C2F3	17036	44260	164085	17036	44260	-164085
	RTG	0	0	0	4618	11771	-43625
NL3/3	GW / opgw	0	0	0	0	0	0
Wind, -5°C	150C1F1	0	0	0	0	0	0
Permanent loads yg= 1.2	150C1F2	0	0	0	0	0	0
Wind angle: 0°	150C1F3	0	0	0	0	0	0
	380C2F1	19802	46887	171259	19802	46887	-171259
	380C2F2	19802	46808	171256	19802	46808	-171256
	380C2F3	19802	46707	171253	19802	46707	-171253
	RTG	0	0	0	7767	16943	-61667
NL3/4	GW / opgw	0	0	0	0	0	0
Construction/maintenance, +5°C	150C1F1	0	0	0	0	0	0
Permanent loads yg= 1.2	150C1F2	0	0	0	0	0	0
Wind angle: 0°	150C1F3	0	0	0	0	0	0
	380C2F1	19451	43765	162000	19451	43765	-162000
	380C2F2	19451	43738	162004	19451	43738	-162004
	380C2F3	19451	43704	162010	19451	43704	-162010
	RTG	0	0	0	5823	12862	-47696
NL3/1a	GW / opgw	0	0	0	0	0	0
Wind, 10°C	150C1F1	0	0	0	0	0	0
Permanent loads yg= 1.2	150C1F2	0	0	0	0	0	0
Wind angle: 45°	150C1F3	0	0	0	0	0	0
	380C2F1	17045	43248	145217	17048	57685	-166717
	380C2F2	17045	42794	144795	17048	55754	-163327
	380C2F3	17045	42229	144312	17047	53358	-159262
	RTG	0	0	0	4621	14690	-43701
NL3/1b	GW / opgw	0	0	0	0	0	0
Wind, -20°C	150C1F1	0	0	0	0	0	0
Permanent loads yg= 1.2	150C1F2	0	0	0	0	0	0
Wind angle: 45°	150C1F3	0	0	0	0	0	0
	380C2F1	17036	45318	164152	17036	48532	-166189
	380C2F2	17036	45207	164127	17036	48117	-165814
	380C2F3	17036	45066	164100	17036	47600	-165386
	RTG	0	0	0	4618	12712	-44021
NL3/3	GW / opgw	0	0	0	0	0	0
Wind, -5°C	150C1F1	0	0	0	0	0	0
Permanent loads yg= 1.2	150C1F2	0	0	0	0	0	0
Wind angle: 45°	150C1F3	0	0	0	0	0	0
	380C2F1	19803	49966	172566	19805	61135	-186431
	380C2F2	19803	49606	172319	19805	59641	-184137
	380C2F3	19803	49157	172039	19804	57794	-181432
	RTG	0	0	0	7768	22876	-67855
NL3/4	GW / opgw	0	0	0	0	0	0
Construction/maintenance, +5°C	150C1F1	0	0	0	0	0	0
Permanent loads yg= 1.2	150C1F2	0	0	0	0	0	0
Wind angle: 45°	150C1F3	0	0	0	0	0	0
	380C2F1	19451	44747	162016	19451	47830	-163562
	380C2F2	19451	44637	162000	19451	47436	-163268
	380C2F3	19451	44499	161985	19451	46945	-162935
	RTG	0	0	0	5823	13758	-47923
NL3/1a	GW / opgw	0	0	0	0	0	0
Wind, 10°C	150C1F1	0	0	0	0	0	0
Permanent loads yg= 1.2	150C1F2	0	0	0	0	0	0
Wind angle: 90°	150C1F3	0	0	0	0	0	0
	380C2F1	17050	63935	178185	17050	63935	-178185
	380C2F2	17049	61390	173439	17049	61390	-173439
	380C2F3	17048	58219	167668	17048	58219	-167668
	RTG	0	0	0	4621	16077	-46164

NL3/1b	GW / opgw	0	0	0	0	0	0
Wind, -20°C	150C1F1	0	0	0	0	0	0
Permanent loads yg= 1.2	150C1F2	0	0	0	0	0	0
Wind angle: 90°	150C1F3	0	0	0	0	0	0
	380C2F1	17036	49879	167572	17036	49879	-167572
	380C2F2	17036	49328	166979	17036	49328	-166979
	380C2F3	17036	48646	166297	17036	48646	-166297
	RTG	0	0	0	4618	13008	-44292
NL3/3	GW / opgw	0	0	0	0	0	0
Wind, -5°C	150C1F1	0	0	0	0	0	0
Permanent loads yg= 1.2	150C1F2	0	0	0	0	0	0
Wind angle: 90°	150C1F3	0	0	0	0	0	0
	380C2F1	19806	66003	194414	19806	66003	-194414
	380C2F2	19806	64014	191070	19806	64014	-191070
	380C2F3	19805	61548	187080	19805	61548	-187080
	RTG	0	0	0	7769	24883	-71068
NL3/4	GW / opgw	0	0	0	0	0	0
Construction/maintenance, +5°C	150C1F1	0	0	0	0	0	0
Permanent loads yg= 1.2	150C1F2	0	0	0	0	0	0
Wind angle: 90°	150C1F3	0	0	0	0	0	0
	380C2F1	19451	49100	164657	19451	49100	-164657
	380C2F2	19451	48582	164186	19451	48582	-164186
	380C2F3	19451	47938	163647	19451	47938	-163647
	RTG	0	0	0	5823	14030	-48105
NL3/1a	GW / opgw	0	0	0	0	0	0
Wind, 10°C	150C1F1	0	0	0	0	0	0
Permanent loads yg= 1.2	150C1F2	0	0	0	0	0	0
Wind angle: -45°	150C1F3	0	0	0	0	0	0
	380C2F1	17048	57685	166717	17045	43248	-145217
	380C2F2	17048	55754	163327	17045	42794	-144795
	380C2F3	17047	53358	159262	17045	42229	-144312
	RTG	0	0	0	4620	11522	-39293
NL3/1b	GW / opgw	0	0	0	0	0	0
Wind, -20°C	150C1F1	0	0	0	0	0	0
Permanent loads yg= 1.2	150C1F2	0	0	0	0	0	0
Wind angle: -45°	150C1F3	0	0	0	0	0	0
	380C2F1	17036	48532	166189	17036	45318	-164152
	380C2F2	17036	48117	165814	17036	45207	-164127
	380C2F3	17036	47600	165386	17036	45066	-164100
	RTG	0	0	0	4618	11997	-43633
NL3/3	GW / opgw	0	0	0	0	0	0
Wind, -5°C	150C1F1	0	0	0	0	0	0
Permanent loads yg= 1.2	150C1F2	0	0	0	0	0	0
Wind angle: -45°	150C1F3	0	0	0	0	0	0
	380C2F1	19805	61135	186431	19803	49966	-172566
	380C2F2	19805	59641	184137	19803	49606	-172319
	380C2F3	19804	57794	181432	19803	49157	-172039
	RTG	0	0	0	7767	18232	-62203
NL3/4	GW / opgw	0	0	0	0	0	0
Construction/maintenance, +5°C	150C1F1	0	0	0	0	0	0
Permanent loads yg= 1.2	150C1F2	0	0	0	0	0	0
Wind angle: -45°	150C1F3	0	0	0	0	0	0
	380C2F1	19451	47830	163562	19451	44747	-162016
	380C2F2	19451	47436	163268	19451	44637	-162000
	380C2F3	19451	46945	162935	19451	44499	-161985
	RTG	0	0	0	5823	13083	-47686
NL3/1a	GW / opgw	0	0	0	0	0	0
Wind, 10°C	150C1F1	0	0	0	0	0	0
Permanent loads yg= 0.9	150C1F2	0	0	0	0	0	0
Wind angle: 0°	150C1F3	0	0	0	0	0	0
	380C2F1	12781	31454	113052	12781	31454	-113052
	380C2F2	12781	31354	113020	12781	31354	-113020
	380C2F3	12781	31229	112987	12781	31229	-112987
	RTG	0	0	0	3464	8457	-30569
NL3/1b	GW / opgw	0	0	0	0	0	0
Wind, -20°C	150C1F1	0	0	0	0	0	0
Permanent loads yg= 0.9	150C1F2	0	0	0	0	0	0
Wind angle: 0°	150C1F3	0	0	0	0	0	0
	380C2F1	12774	35897	132637	12774	35897	-132637
	380C2F2	12774	35870	132639	12774	35870	-132639
	380C2F3	12774	35835	132641	12774	35835	-132641
	RTG	0	0	0	3463	9430	-34888

NL3/3	GW / opgw	0	0	0	0	0	0
Wind, -5°C	150C1F1	0	0	0	0	0	0
Permanent loads yg= 0.9	150C1F2	0	0	0	0	0	0
Wind angle: 0°	150C1F3	0	0	0	0	0	0
	380C2F1	15538	39068	142079	15538	39068	-142079
	380C2F2	15538	38986	142066	15538	38986	-142066
	380C2F3	15538	38883	142054	15538	38883	-142054
	RTG	0	0	0	6610	15011	-54458
NL3/4	GW / opgw	0	0	0	0	0	0
Construction/maintenance, +5°C	150C1F1	0	0	0	0	0	0
Permanent loads yg= 0.9	150C1F2	0	0	0	0	0	0
Wind angle: 0°	150C1F3	0	0	0	0	0	0
	380C2F1	15186	36009	133052	15186	36009	-133052
	380C2F2	15186	35981	133054	15186	35981	-133054
	380C2F3	15186	35946	133059	15186	35946	-133059
	RTG	0	0	0	4667	10769	-39885
NL3/1a	GW / opgw	0	0	0	0	0	0
Wind, 10°C	150C1F1	0	0	0	0	0	0
Permanent loads yg= 0.9	150C1F2	0	0	0	0	0	0
Wind angle: 45°	150C1F3	0	0	0	0	0	0
	380C2F1	12781	35619	116750	12784	52013	-145554
	380C2F2	12781	35110	116122	12784	49840	-141264
	380C2F3	12781	34481	115397	12783	47130	-136026
	RTG	0	0	0	3465	12977	-37311
NL3/1b	GW / opgw	0	0	0	0	0	0
Wind, -20°C	150C1F1	0	0	0	0	0	0
Permanent loads yg= 0.9	150C1F2	0	0	0	0	0	0
Wind angle: 45°	150C1F3	0	0	0	0	0	0
	380C2F1	12774	36933	132858	12774	40465	-136087
	380C2F2	12774	36815	132809	12774	39998	-135518
	380C2F3	12774	36666	132755	12774	39420	-134861
	RTG	0	0	0	3463	10442	-35549
NL3/3	GW / opgw	0	0	0	0	0	0
Wind, -5°C	150C1F1	0	0	0	0	0	0
Permanent loads yg= 0.9	150C1F2	0	0	0	0	0	0
Wind angle: 45°	150C1F3	0	0	0	0	0	0
	380C2F1	15539	42338	144103	15541	54776	-162707
	380C2F2	15539	41948	143742	15541	53105	-159750
	380C2F3	15539	41464	143329	15540	51036	-156216
	RTG	0	0	0	6611	21321	-62052
NL3/4	GW / opgw	0	0	0	0	0	0
Construction/maintenance, +5°C	150C1F1	0	0	0	0	0	0
Permanent loads yg= 0.9	150C1F2	0	0	0	0	0	0
Wind angle: 45°	150C1F3	0	0	0	0	0	0
	380C2F1	15186	37015	133164	15186	40313	-135511
	380C2F2	15186	36902	133132	15186	39884	-135085
	380C2F3	15186	36759	133099	15186	39352	-134597
	RTG	0	0	0	4667	11702	-40251
NL3/1a	GW / opgw	0	0	0	0	0	0
Wind, 10°C	150C1F1	0	0	0	0	0	0
Permanent loads yg= 0.9	150C1F2	0	0	0	0	0	0
Wind angle: 90°	150C1F3	0	0	0	0	0	0
	380C2F1	12786	58962	159635	12786	58962	-159635
	380C2F2	12785	56147	153879	12785	56147	-153879
	380C2F3	12784	52610	146746	12784	52610	-146746
	RTG	0	0	0	3465	14539	-40424
NL3/1b	GW / opgw	0	0	0	0	0	0
Wind, -20°C	150C1F1	0	0	0	0	0	0
Permanent loads yg= 0.9	150C1F2	0	0	0	0	0	0
Wind angle: 90°	150C1F3	0	0	0	0	0	0
	380C2F1	12774	41993	138148	12774	41993	-138148
	380C2F2	12774	41367	137270	12774	41367	-137270
	380C2F3	12774	40594	136250	12774	40594	-136250
	RTG	0	0	0	3463	10775	-35958
NL3/3	GW / opgw	0	0	0	0	0	0
Wind, -5°C	150C1F1	0	0	0	0	0	0
Permanent loads yg= 0.9	150C1F2	0	0	0	0	0	0
Wind angle: 90°	150C1F3	0	0	0	0	0	0
	380C2F1	15542	60198	172755	15542	60198	-172755
	380C2F2	15542	57987	168588	15542	57987	-168588
	380C2F3	15541	55238	163537	15541	55238	-163537
	RTG	0	0	0	6612	23468	-65790

NL3/4	GW / opgw	0	0	0	0	0	0
Construction/maintenance, +5°C	150C1F1	0	0	0	0	0	0
Permanent loads yg= 0.9	150C1F2	0	0	0	0	0	0
Wind angle: 90°	150C1F3	0	0	0	0	0	0
	380C2F1	15187	41708	137072	15187	41708	-137072
	380C2F2	15187	41137	136404	15187	41137	-136404
	380C2F3	15186	40431	135633	15186	40431	-135633
	RTG	0	0	0	4667	11994	-40507
NL3/1a	GW / opgw	0	0	0	0	0	0
Wind, 10°C	150C1F1	0	0	0	0	0	0
Permanent loads yg= 0.9	150C1F2	0	0	0	0	0	0
Wind angle: -45°	150C1F3	0	0	0	0	0	0
	380C2F1	12784	52013	145554	12781	35619	-116750
	380C2F2	12784	49840	141264	12781	35110	-116122
	380C2F3	12783	47130	136026	12781	34481	-115397
	RTG	0	0	0	3464	9375	-31283
NL3/1b	GW / opgw	0	0	0	0	0	0
Wind, -20°C	150C1F1	0	0	0	0	0	0
Permanent loads yg= 0.9	150C1F2	0	0	0	0	0	0
Wind angle: -45°	150C1F3	0	0	0	0	0	0
	380C2F1	12774	40465	136087	12774	36933	-132858
	380C2F2	12774	39998	135518	12774	36815	-132809
	380C2F3	12774	39420	134861	12774	36666	-132755
	RTG	0	0	0	3463	9663	-34924
NL3/3	GW / opgw	0	0	0	0	0	0
Wind, -5°C	150C1F1	0	0	0	0	0	0
Permanent loads yg= 0.9	150C1F2	0	0	0	0	0	0
Wind angle: -45°	150C1F3	0	0	0	0	0	0
	380C2F1	15541	54776	162707	15539	42338	-144103
	380C2F2	15541	53105	159750	15539	41948	-143742
	380C2F3	15540	51036	156216	15539	41464	-143329
	RTG	0	0	0	6610	16350	-55181
NL3/4	GW / opgw	0	0	0	0	0	0
Construction/maintenance, +5°C	150C1F1	0	0	0	0	0	0
Permanent loads yg= 0.9	150C1F2	0	0	0	0	0	0
Wind angle: -45°	150C1F3	0	0	0	0	0	0
	380C2F1	15186	40313	135511	15186	37015	-133164
	380C2F2	15186	39884	135085	15186	36902	-133132
	380C2F3	15186	39352	134597	15186	36759	-133099
	RTG	0	0	0	4667	10994	-39889

		Ahead			Back		
Loadcase according to 50341-3-15	Att. Point	Vertical [N]	Transversal [N]	Longitudinal [N]	Vertical [N]	Transversal [N]	Longitudinal [N]
NL3/1a	GW / opgw	0	0	0	0	0	0
Wind, 10°C	150C1F1	0	0	0	0	0	0
Permanent loads yg= 1.2	150C1F2	0	0	0	0	0	0
Wind angle: 0°	150C1F3	0	0	0	0	0	0
	380C2F1	17045	39437	142845	17045	39437	-142845
	380C2F2	17045	39342	142830	17045	39342	-142830
	380C2F3	17045	39221	142815	17045	39221	-142815
	RTG	0	0	0	4620	10674	-38843
NL3/1b	GW / opgw	0	0	0	0	0	0
Wind, -20°C	150C1F1	0	0	0	0	0	0
Permanent loads yg= 1.2	150C1F2	0	0	0	0	0	0
Wind angle: 0°	150C1F3	0	0	0	0	0	0
	380C2F1	17036	44322	164077	17036	44322	-164077
	380C2F2	17036	44295	164081	17036	44295	-164081
	380C2F3	17036	44260	164085	17036	44260	-164085
	RTG	0	0	0	4618	11771	-43625
NL3/3	GW / opgw	0	0	0	0	0	0
Wind, -5°C	150C1F1	0	0	0	0	0	0
Permanent loads yg= 1.2	150C1F2	0	0	0	0	0	0
Wind angle: 0°	150C1F3	0	0	0	0	0	0
	380C2F1	19802	46887	171259	19802	46887	-171259
	380C2F2	19802	46808	171256	19802	46808	-171256
	380C2F3	19802	46707	171253	19802	46707	-171253
	RTG	0	0	0	7767	16943	-61667
NL3/4	GW / opgw	0	0	0	0	0	0
Construction/maintenance, +5°C	150C1F1	0	0	0	0	0	0
Permanent loads yg= 1.2	150C1F2	0	0	0	0	0	0
Wind angle: 0°	150C1F3	0	0	0	0	0	0
	380C2F1	19451	43765	162000	19451	43765	-162000
	380C2F2	19451	43738	162004	19451	43738	-162004
	380C2F3	19451	43704	162010	19451	43704	-162010
	RTG	0	0	0	5823	12862	-47696
NL3/1a	GW / opgw	0	0	0	0	0	0
Wind, 10°C	150C1F1	0	0	0	0	0	0
Permanent loads yg= 1.2	150C1F2	0	0	0	0	0	0
Wind angle: 45°	150C1F3	0	0	0	0	0	0
	380C2F1	17045	43248	145217	17048	57685	-166717
	380C2F2	17045	42794	144795	17048	55754	-163327
	380C2F3	17045	42229	144312	17047	53358	-159262
	RTG	0	0	0	4621	14690	-43701
NL3/1b	GW / opgw	0	0	0	0	0	0
Wind, -20°C	150C1F1	0	0	0	0	0	0
Permanent loads yg= 1.2	150C1F2	0	0	0	0	0	0
Wind angle: 45°	150C1F3	0	0	0	0	0	0
	380C2F1	17036	45318	164152	17036	48532	-166189
	380C2F2	17036	45207	164127	17036	48117	-165814
	380C2F3	17036	45066	164100	17036	47600	-165386
	RTG	0	0	0	4618	12712	-44021
NL3/3	GW / opgw	0	0	0	0	0	0
Wind, -5°C	150C1F1	0	0	0	0	0	0
Permanent loads yg= 1.2	150C1F2	0	0	0	0	0	0
Wind angle: 45°	150C1F3	0	0	0	0	0	0
	380C2F1	19803	49966	172566	19805	61135	-186431
	380C2F2	19803	49606	172319	19805	59641	-184137
	380C2F3	19803	49157	172039	19804	57794	-181432
	RTG	0	0	0	7768	22876	-67855
NL3/4	GW / opgw	0	0	0	0	0	0
Construction/maintenance, +5°C	150C1F1	0	0	0	0	0	0
Permanent loads yg= 1.2	150C1F2	0	0	0	0	0	0
Wind angle: 45°	150C1F3	0	0	0	0	0	0
	380C2F1	19451	44747	162016	19451	47830	-163562
	380C2F2	19451	44637	162000	19451	47436	-163268
	380C2F3	19451	44499	161985	19451	46945	-162935
	RTG	0	0	0	5823	13758	-47923
NL3/1a	GW / opgw	0	0	0	0	0	0
Wind, 10°C	150C1F1	0	0	0	0	0	0
Permanent loads yg= 1.2	150C1F2	0	0	0	0	0	0
Wind angle: 90°	150C1F3	0	0	0	0	0	0
	380C2F1	17050	63935	178185	17050	63935	-178185
	380C2F2	17049	61390	173439	17049	61390	-173439
	380C2F3	17048	58219	167668	17048	58219	-167668
	RTG	0	0	0	4621	16077	-46164

NL3/1b	GW / opgw	0	0	0	0	0	0
Wind, -20°C	150C1F1	0	0	0	0	0	0
Permanent loads yg= 1.2	150C1F2	0	0	0	0	0	0
Wind angle: 90°	150C1F3	0	0	0	0	0	0
	380C2F1	17036	49879	167572	17036	49879	-167572
	380C2F2	17036	49328	166979	17036	49328	-166979
	380C2F3	17036	48646	166297	17036	48646	-166297
	RTG	0	0	0	4618	13008	-44292
NL3/3	GW / opgw	0	0	0	0	0	0
Wind, -5°C	150C1F1	0	0	0	0	0	0
Permanent loads yg= 1.2	150C1F2	0	0	0	0	0	0
Wind angle: 90°	150C1F3	0	0	0	0	0	0
	380C2F1	19806	66003	194414	19806	66003	-194414
	380C2F2	19806	64014	191070	19806	64014	-191070
	380C2F3	19805	61548	187080	19805	61548	-187080
	RTG	0	0	0	7769	24883	-71068
NL3/4	GW / opgw	0	0	0	0	0	0
Construction/maintenance, +5°C	150C1F1	0	0	0	0	0	0
Permanent loads yg= 1.2	150C1F2	0	0	0	0	0	0
Wind angle: 90°	150C1F3	0	0	0	0	0	0
	380C2F1	19451	49100	164657	19451	49100	-164657
	380C2F2	19451	48582	164186	19451	48582	-164186
	380C2F3	19451	47938	163647	19451	47938	-163647
	RTG	0	0	0	5823	14030	-48105
NL3/1a	GW / opgw	0	0	0	0	0	0
Wind, 10°C	150C1F1	0	0	0	0	0	0
Permanent loads yg= 1.2	150C1F2	0	0	0	0	0	0
Wind angle: -45°	150C1F3	0	0	0	0	0	0
	380C2F1	17048	57685	166717	17045	43248	-145217
	380C2F2	17048	55754	163327	17045	42794	-144795
	380C2F3	17047	53358	159262	17045	42229	-144312
	RTG	0	0	0	4620	11522	-39293
NL3/1b	GW / opgw	0	0	0	0	0	0
Wind, -20°C	150C1F1	0	0	0	0	0	0
Permanent loads yg= 1.2	150C1F2	0	0	0	0	0	0
Wind angle: -45°	150C1F3	0	0	0	0	0	0
	380C2F1	17036	48532	166189	17036	45318	-164152
	380C2F2	17036	48117	165814	17036	45207	-164127
	380C2F3	17036	47600	165386	17036	45066	-164100
	RTG	0	0	0	4618	11997	-43633
NL3/3	GW / opgw	0	0	0	0	0	0
Wind, -5°C	150C1F1	0	0	0	0	0	0
Permanent loads yg= 1.2	150C1F2	0	0	0	0	0	0
Wind angle: -45°	150C1F3	0	0	0	0	0	0
	380C2F1	19805	61135	186431	19803	49966	-172566
	380C2F2	19805	59641	184137	19803	49606	-172319
	380C2F3	19804	57794	181432	19803	49157	-172039
	RTG	0	0	0	7767	18232	-62203
NL3/4	GW / opgw	0	0	0	0	0	0
Construction/maintenance, +5°C	150C1F1	0	0	0	0	0	0
Permanent loads yg= 1.2	150C1F2	0	0	0	0	0	0
Wind angle: -45°	150C1F3	0	0	0	0	0	0
	380C2F1	19451	47830	163562	19451	44747	-162016
	380C2F2	19451	47436	163268	19451	44637	-162000
	380C2F3	19451	46945	162935	19451	44499	-161985
	RTG	0	0	0	5823	13083	-47686
NL3/1a	GW / opgw	0	0	0	0	0	0
Wind, 10°C	150C1F1	0	0	0	0	0	0
Permanent loads yg= 0.9	150C1F2	0	0	0	0	0	0
Wind angle: 0°	150C1F3	0	0	0	0	0	0
	380C2F1	12781	31454	113052	12781	31454	-113052
	380C2F2	12781	31354	113020	12781	31354	-113020
	380C2F3	12781	31229	112987	12781	31229	-112987
	RTG	0	0	0	3464	8457	-30569
NL3/1b	GW / opgw	0	0	0	0	0	0
Wind, -20°C	150C1F1	0	0	0	0	0	0
Permanent loads yg= 0.9	150C1F2	0	0	0	0	0	0
Wind angle: 0°	150C1F3	0	0	0	0	0	0
	380C2F1	12774	35897	132637	12774	35897	-132637
	380C2F2	12774	35870	132639	12774	35870	-132639
	380C2F3	12774	35835	132641	12774	35835	-132641
	RTG	0	0	0	3463	9430	-34888

NL3/3	GW / opgw	0	0	0	0	0	0
Wind, -5°C	150C1F1	0	0	0	0	0	0
Permanent loads yg= 0.9	150C1F2	0	0	0	0	0	0
Wind angle: 0°	150C1F3	0	0	0	0	0	0
	380C2F1	15538	39068	142079	15538	39068	-142079
	380C2F2	15538	38986	142066	15538	38986	-142066
	380C2F3	15538	38883	142054	15538	38883	-142054
	RTG	0	0	0	6610	15011	-54458
NL3/4	GW / opgw	0	0	0	0	0	0
Construction/maintenance, +5°C	150C1F1	0	0	0	0	0	0
Permanent loads yg= 0.9	150C1F2	0	0	0	0	0	0
Wind angle: 0°	150C1F3	0	0	0	0	0	0
	380C2F1	15186	36009	133052	15186	36009	-133052
	380C2F2	15186	35981	133054	15186	35981	-133054
	380C2F3	15186	35946	133059	15186	35946	-133059
	RTG	0	0	0	4667	10769	-39885
NL3/1a	GW / opgw	0	0	0	0	0	0
Wind, 10°C	150C1F1	0	0	0	0	0	0
Permanent loads yg= 0.9	150C1F2	0	0	0	0	0	0
Wind angle: 45°	150C1F3	0	0	0	0	0	0
	380C2F1	12781	35619	116750	12784	52013	-145554
	380C2F2	12781	35110	116122	12784	49840	-141264
	380C2F3	12781	34481	115397	12783	47130	-136026
	RTG	0	0	0	3465	12977	-37311
NL3/1b	GW / opgw	0	0	0	0	0	0
Wind, -20°C	150C1F1	0	0	0	0	0	0
Permanent loads yg= 0.9	150C1F2	0	0	0	0	0	0
Wind angle: 45°	150C1F3	0	0	0	0	0	0
	380C2F1	12774	36933	132858	12774	40465	-136087
	380C2F2	12774	36815	132809	12774	39998	-135518
	380C2F3	12774	36666	132755	12774	39420	-134861
	RTG	0	0	0	3463	10442	-35549
NL3/3	GW / opgw	0	0	0	0	0	0
Wind, -5°C	150C1F1	0	0	0	0	0	0
Permanent loads yg= 0.9	150C1F2	0	0	0	0	0	0
Wind angle: 45°	150C1F3	0	0	0	0	0	0
	380C2F1	15539	42338	144103	15541	54776	-162707
	380C2F2	15539	41948	143742	15541	53105	-159750
	380C2F3	15539	41464	143329	15540	51036	-156216
	RTG	0	0	0	6611	21321	-62052
NL3/4	GW / opgw	0	0	0	0	0	0
Construction/maintenance, +5°C	150C1F1	0	0	0	0	0	0
Permanent loads yg= 0.9	150C1F2	0	0	0	0	0	0
Wind angle: 45°	150C1F3	0	0	0	0	0	0
	380C2F1	15186	37015	133164	15186	40313	-135511
	380C2F2	15186	36902	133132	15186	39884	-135085
	380C2F3	15186	36759	133099	15186	39352	-134597
	RTG	0	0	0	4667	11702	-40251
NL3/1a	GW / opgw	0	0	0	0	0	0
Wind, 10°C	150C1F1	0	0	0	0	0	0
Permanent loads yg= 0.9	150C1F2	0	0	0	0	0	0
Wind angle: 90°	150C1F3	0	0	0	0	0	0
	380C2F1	12786	58962	159635	12786	58962	-159635
	380C2F2	12785	56147	153879	12785	56147	-153879
	380C2F3	12784	52610	146746	12784	52610	-146746
	RTG	0	0	0	3465	14539	-40424
NL3/1b	GW / opgw	0	0	0	0	0	0
Wind, -20°C	150C1F1	0	0	0	0	0	0
Permanent loads yg= 0.9	150C1F2	0	0	0	0	0	0
Wind angle: 90°	150C1F3	0	0	0	0	0	0
	380C2F1	12774	41993	138148	12774	41993	-138148
	380C2F2	12774	41367	137270	12774	41367	-137270
	380C2F3	12774	40594	136250	12774	40594	-136250
	RTG	0	0	0	3463	10775	-35958
NL3/3	GW / opgw	0	0	0	0	0	0
Wind, -5°C	150C1F1	0	0	0	0	0	0
Permanent loads yg= 0.9	150C1F2	0	0	0	0	0	0
Wind angle: 90°	150C1F3	0	0	0	0	0	0
	380C2F1	15542	60198	172755	15542	60198	-172755
	380C2F2	15542	57987	168588	15542	57987	-168588
	380C2F3	15541	55238	163537	15541	55238	-163537
	RTG	0	0	0	6612	23468	-65790

NL3/4	GW / opgw	0	0	0	0	0	0
Construction/maintenance, +5°C	150C1F1	0	0	0	0	0	0
Permanent loads yg= 0.9	150C1F2	0	0	0	0	0	0
Wind angle: 90°	150C1F3	0	0	0	0	0	0
	380C2F1	15187	41708	137072	15187	41708	-137072
	380C2F2	15187	41137	136404	15187	41137	-136404
	380C2F3	15186	40431	135633	15186	40431	-135633
	RTG	0	0	0	4667	11994	-40507
NL3/1a	GW / opgw	0	0	0	0	0	0
Wind, 10°C	150C1F1	0	0	0	0	0	0
Permanent loads yg= 0.9	150C1F2	0	0	0	0	0	0
Wind angle: -45°	150C1F3	0	0	0	0	0	0
	380C2F1	12784	52013	145554	12781	35619	-116750
	380C2F2	12784	49840	141264	12781	35110	-116122
	380C2F3	12783	47130	136026	12781	34481	-115397
	RTG	0	0	0	3464	9375	-31283
NL3/1b	GW / opgw	0	0	0	0	0	0
Wind, -20°C	150C1F1	0	0	0	0	0	0
Permanent loads yg= 0.9	150C1F2	0	0	0	0	0	0
Wind angle: -45°	150C1F3	0	0	0	0	0	0
	380C2F1	12774	40465	136087	12774	36933	-132858
	380C2F2	12774	39998	135518	12774	36815	-132809
	380C2F3	12774	39420	134861	12774	36666	-132755
	RTG	0	0	0	3463	9663	-34924
NL3/3	GW / opgw	0	0	0	0	0	0
Wind, -5°C	150C1F1	0	0	0	0	0	0
Permanent loads yg= 0.9	150C1F2	0	0	0	0	0	0
Wind angle: -45°	150C1F3	0	0	0	0	0	0
	380C2F1	15541	54776	162707	15539	42338	-144103
	380C2F2	15541	53105	159750	15539	41948	-143742
	380C2F3	15540	51036	156216	15539	41464	-143329
	RTG	0	0	0	6610	16350	-55181
NL3/4	GW / opgw	0	0	0	0	0	0
Construction/maintenance, +5°C	150C1F1	0	0	0	0	0	0
Permanent loads yg= 0.9	150C1F2	0	0	0	0	0	0
Wind angle: -45°	150C1F3	0	0	0	0	0	0
	380C2F1	15186	40313	135511	15186	37015	-133164
	380C2F2	15186	39884	135085	15186	36902	-133132
	380C2F3	15186	39352	134597	15186	36759	-133099
	RTG	0	0	0	4667	10994	-39889

		Ahead			Back		
Loadcase according to 50341-3-15	Att. Point	Vertical [N]	Transversal [N]	Longitudinal [N]	Vertical [N]	Transversal [N]	Longitudinal [N]
NL3/1a	GW / opgw	2313	5421	19460	0	0	0
Wind, 10°C	150C1F1	8522	19719	71422	0	0	0
Permanent loads yg= 1.2	150C1F2	8522	19671	71415	0	0	0
Wind angle: 0°	150C1F3	8522	19611	71408	0	0	0
	380C2F1	0	0	0	17045	39437	-142845
	380C2F2	0	0	0	17045	39342	-142830
	380C2F3	0	0	0	17045	39221	-142815
	RTG	0	0	0	4620	10674	-38843
NL3/1b	GW / opgw	2312	5963	22016	0	0	0
Wind, -20°C	150C1F1	8518	22161	82039	0	0	0
Permanent loads yg= 1.2	150C1F2	8518	22147	82040	0	0	0
Wind angle: 0°	150C1F3	8518	22130	82043	0	0	0
	380C2F1	0	0	0	17036	44322	-164077
	380C2F2	0	0	0	17036	44295	-164081
	380C2F3	0	0	0	17036	44260	-164085
	RTG	0	0	0	4618	11771	-43625
NL3/3	GW / opgw	3883	8610	30911	0	0	0
Wind, -5°C	150C1F1	9901	23444	85630	0	0	0
Permanent loads yg= 1.2	150C1F2	9901	23404	85628	0	0	0
Wind angle: 0°	150C1F3	9901	23354	85627	0	0	0
	380C2F1	0	0	0	19802	46887	-171259
	380C2F2	0	0	0	19802	46808	-171256
	380C2F3	0	0	0	19802	46707	-171253
	RTG	0	0	0	7767	16943	-61667
NL3/4	GW / opgw	2915	6463	23882	0	0	0
Construction/maintenance, +5°C	150C1F1	9725	21883	81000	0	0	0
Permanent loads yg= 1.2	150C1F2	9725	21869	81002	0	0	0
Wind angle: 0°	150C1F3	9725	21852	81005	0	0	0
	380C2F1	0	0	0	19451	43765	-162000
	380C2F2	0	0	0	19451	43738	-162004
	380C2F3	0	0	0	19451	43704	-162010
	RTG	0	0	0	5823	12862	-47696
NL3/1a	GW / opgw	2313	6149	20066	0	0	0
Wind, 10°C	150C1F1	8523	21624	72609	0	0	0
Permanent loads yg= 1.2	150C1F2	8523	21397	72397	0	0	0
Wind angle: 45°	150C1F3	8523	21115	72156	0	0	0
	380C2F1	0	0	0	17048	57685	-166717
	380C2F2	0	0	0	17048	55754	-163327
	380C2F3	0	0	0	17047	53358	-159262
	RTG	0	0	0	4621	14690	-43701
NL3/1b	GW / opgw	2312	6146	22050	0	0	0
Wind, -20°C	150C1F1	8518	22659	82076	0	0	0
Permanent loads yg= 1.2	150C1F2	8518	22603	82063	0	0	0
Wind angle: 45°	150C1F3	8518	22533	82050	0	0	0
	380C2F1	0	0	0	17036	48532	-166189
	380C2F2	0	0	0	17036	48117	-165814
	380C2F3	0	0	0	17036	47600	-165386
	RTG	0	0	0	4618	12712	-44021
NL3/3	GW / opgw	3883	9707	31669	0	0	0
Wind, -5°C	150C1F1	9901	24983	86283	0	0	0
Permanent loads yg= 1.2	150C1F2	9901	24803	86159	0	0	0
Wind angle: 45°	150C1F3	9901	24579	86020	0	0	0
	380C2F1	0	0	0	19805	61135	-186431
	380C2F2	0	0	0	19805	59641	-184137
	380C2F3	0	0	0	19804	57794	-181432
	RTG	0	0	0	7768	22876	-67855
NL3/4	GW / opgw	2915	6640	23894	0	0	0
Construction/maintenance, +5°C	150C1F1	9725	22373	81008	0	0	0
Permanent loads yg= 1.2	150C1F2	9725	22319	81000	0	0	0
Wind angle: 45°	150C1F3	9725	22250	80992	0	0	0
	380C2F1	0	0	0	19451	47830	-163562
	380C2F2	0	0	0	19451	47436	-163268
	380C2F3	0	0	0	19451	46945	-162935
	RTG	0	0	0	5823	13758	-47923
NL3/1a	GW / opgw	2314	10178	27217	0	0	0
Wind, 10°C	150C1F1	8525	31968	89093	0	0	0
Permanent loads yg= 1.2	150C1F2	8525	30695	86719	0	0	0
Wind angle: 90°	150C1F3	8524	29109	83834	0	0	0
	380C2F1	0	0	0	17050	63935	-178185
	380C2F2	0	0	0	17049	61390	-173439
	380C2F3	0	0	0	17048	58219	-167668
	RTG	0	0	0	4621	16077	-46164

NL3/1b	GW / opgw	2312	7025	22909	0	0	0
Wind, -20°C	150C1F1	8518	24939	83786	0	0	0
Permanent loads yg= 1.2	150C1F2	8518	24664	83489	0	0	0
Wind angle: 90°	150C1F3	8518	24323	83149	0	0	0
	380C2F1	0	0	0	17036	49879	-167572
	380C2F2	0	0	0	17036	49328	-166979
	380C2F3	0	0	0	17036	48646	-166297
	RTG	0	0	0	4618	13008	-44292
NL3/3	GW / opgw	3885	15569	41090	0	0	0
Wind, -5°C	150C1F1	9903	33002	97207	0	0	0
Permanent loads yg= 1.2	150C1F2	9903	32007	95535	0	0	0
Wind angle: 90°	150C1F3	9903	30774	93540	0	0	0
	380C2F1	0	0	0	19806	66003	-194414
	380C2F2	0	0	0	19806	64014	-191070
	380C2F3	0	0	0	19805	61548	-187080
	RTG	0	0	0	7769	24883	-71068
NL3/4	GW / opgw	2915	7446	24476	0	0	0
Construction/maintenance, +5°C	150C1F1	9726	24550	82329	0	0	0
Permanent loads yg= 1.2	150C1F2	9726	24291	82093	0	0	0
Wind angle: 90°	150C1F3	9726	23969	81824	0	0	0
	380C2F1	0	0	0	19451	49100	-164657
	380C2F2	0	0	0	19451	48582	-164186
	380C2F3	0	0	0	19451	47938	-163647
	RTG	0	0	0	5823	14030	-48105
NL3/1a	GW / opgw	2314	8980	24860	0	0	0
Wind, 10°C	150C1F1	8524	28843	83359	0	0	0
Permanent loads yg= 1.2	150C1F2	8524	27877	81663	0	0	0
Wind angle: -45°	150C1F3	8524	26679	79631	0	0	0
	380C2F1	0	0	0	17045	43248	-145217
	380C2F2	0	0	0	17045	42794	-144795
	380C2F3	0	0	0	17045	42229	-144312
	RTG	0	0	0	4620	11522	-39293
NL3/1b	GW / opgw	2312	6761	22572	0	0	0
Wind, -20°C	150C1F1	8518	24266	83095	0	0	0
Permanent loads yg= 1.2	150C1F2	8518	24058	82907	0	0	0
Wind angle: -45°	150C1F3	8518	23800	82693	0	0	0
	380C2F1	0	0	0	17036	45318	-164152
	380C2F2	0	0	0	17036	45207	-164127
	380C2F3	0	0	0	17036	45066	-164100
	RTG	0	0	0	4618	11997	-43633
NL3/3	GW / opgw	3884	13833	37952	0	0	0
Wind, -5°C	150C1F1	9902	30568	93216	0	0	0
Permanent loads yg= 1.2	150C1F2	9902	29821	92068	0	0	0
Wind angle: -45°	150C1F3	9902	28897	90716	0	0	0
	380C2F1	0	0	0	19803	49966	-172566
	380C2F2	0	0	0	19803	49606	-172319
	380C2F3	0	0	0	19803	49157	-172039
	RTG	0	0	0	7767	18232	-62203
NL3/4	GW / opgw	2915	7208	24240	0	0	0
Construction/maintenance, +5°C	150C1F1	9726	23915	81781	0	0	0
Permanent loads yg= 1.2	150C1F2	9725	23718	81634	0	0	0
Wind angle: -45°	150C1F3	9725	23473	81468	0	0	0
	380C2F1	0	0	0	19451	44747	-162016
	380C2F2	0	0	0	19451	44637	-162000
	380C2F3	0	0	0	19451	44499	-161985
	RTG	0	0	0	5823	13083	-47686
NL3/1a	GW / opgw	1735	4318	15341	0	0	0
Wind, 10°C	150C1F1	6390	15727	56526	0	0	0
Permanent loads yg= 0.9	150C1F2	6390	15677	56510	0	0	0
Wind angle: 0°	150C1F3	6390	15614	56493	0	0	0
	380C2F1	0	0	0	12781	31454	-113052
	380C2F2	0	0	0	12781	31354	-113020
	380C2F3	0	0	0	12781	31229	-112987
	RTG	0	0	0	3464	8457	-30569
NL3/1b	GW / opgw	1734	4791	17643	0	0	0
Wind, -20°C	150C1F1	6387	17949	66319	0	0	0
Permanent loads yg= 0.9	150C1F2	6387	17935	66319	0	0	0
Wind angle: 0°	150C1F3	6387	17917	66321	0	0	0
	380C2F1	0	0	0	12774	35897	-132637
	380C2F2	0	0	0	12774	35870	-132639
	380C2F3	0	0	0	12774	35835	-132641
	RTG	0	0	0	3463	9430	-34888

NL3/3	GW / opgw	3304	7647	27318	0	0	0
Wind, -5°C	150C1F1	7769	19534	71039	0	0	0
Permanent loads yg= 0.9	150C1F2	7769	19493	71033	0	0	0
Wind angle: 0°	150C1F3	7769	19441	71027	0	0	0
	380C2F1	0	0	0	15538	39068	-142079
	380C2F2	0	0	0	15538	38986	-142066
	380C2F3	0	0	0	15538	38883	-142054
	RTG	0	0	0	6610	15011	-54458
NL3/4	GW / opgw	2336	5417	19980	0	0	0
Construction/maintenance, +5°C	150C1F1	7593	18004	66526	0	0	0
Permanent loads yg= 0.9	150C1F2	7593	17991	66527	0	0	0
Wind angle: 0°	150C1F3	7593	17973	66529	0	0	0
	380C2F1	0	0	0	15186	36009	-133052
	380C2F2	0	0	0	15186	35981	-133054
	380C2F3	0	0	0	15186	35946	-133059
	RTG	0	0	0	4667	10769	-39885
NL3/1a	GW / opgw	1735	5126	16245	0	0	0
Wind, 10°C	150C1F1	6391	17810	58375	0	0	0
Permanent loads yg= 0.9	150C1F2	6391	17555	58061	0	0	0
Wind angle: 45°	150C1F3	6391	17240	57698	0	0	0
	380C2F1	0	0	0	12784	52013	-145554
	380C2F2	0	0	0	12784	49840	-141264
	380C2F3	0	0	0	12783	47130	-136026
	RTG	0	0	0	3465	12977	-37311
NL3/1b	GW / opgw	1734	4983	17711	0	0	0
Wind, -20°C	150C1F1	6387	18466	66429	0	0	0
Permanent loads yg= 0.9	150C1F2	6387	18407	66405	0	0	0
Wind angle: 45°	150C1F3	6387	18333	66378	0	0	0
	380C2F1	0	0	0	12774	40465	-136087
	380C2F2	0	0	0	12774	39998	-135518
	380C2F3	0	0	0	12774	39420	-134861
	RTG	0	0	0	3463	10442	-35549
NL3/3	GW / opgw	3304	8802	28293	0	0	0
Wind, -5°C	150C1F1	7769	21169	72052	0	0	0
Permanent loads yg= 0.9	150C1F2	7769	20974	71871	0	0	0
Wind angle: 45°	150C1F3	7769	20732	71665	0	0	0
	380C2F1	0	0	0	15541	54776	-162707
	380C2F2	0	0	0	15541	53105	-159750
	380C2F3	0	0	0	15540	51036	-156216
	RTG	0	0	0	6611	21321	-62052
NL3/4	GW / opgw	2336	5599	20009	0	0	0
Construction/maintenance, +5°C	150C1F1	7593	18508	66582	0	0	0
Permanent loads yg= 0.9	150C1F2	7593	18451	66566	0	0	0
Wind angle: 45°	150C1F3	7593	18380	66549	0	0	0
	380C2F1	0	0	0	15186	40313	-135511
	380C2F2	0	0	0	15186	39884	-135085
	380C2F3	0	0	0	15186	39352	-134597
	RTG	0	0	0	4667	11702	-40251
NL3/1a	GW / opgw	1736	9613	25111	0	0	0
Wind, 10°C	150C1F1	6393	29481	79817	0	0	0
Permanent loads yg= 0.9	150C1F2	6393	28073	76939	0	0	0
Wind angle: 90°	150C1F3	6392	26305	73373	0	0	0
	380C2F1	0	0	0	12786	58962	-159635
	380C2F2	0	0	0	12785	56147	-153879
	380C2F3	0	0	0	12784	52610	-146746
	RTG	0	0	0	3465	14539	-40424
NL3/1b	GW / opgw	1734	5974	18987	0	0	0
Wind, -20°C	150C1F1	6387	20997	69074	0	0	0
Permanent loads yg= 0.9	150C1F2	6387	20683	68635	0	0	0
Wind angle: 90°	150C1F3	6387	20297	68125	0	0	0
	380C2F1	0	0	0	12774	41993	-138148
	380C2F2	0	0	0	12774	41367	-137270
	380C2F3	0	0	0	12774	40594	-136250
	RTG	0	0	0	3463	10775	-35958
NL3/3	GW / opgw	3306	15037	39110	0	0	0
Wind, -5°C	150C1F1	7771	30099	86377	0	0	0
Permanent loads yg= 0.9	150C1F2	7771	28994	84294	0	0	0
Wind angle: 90°	150C1F3	7771	27619	81769	0	0	0
	380C2F1	0	0	0	15542	60198	-172755
	380C2F2	0	0	0	15542	57987	-168588
	380C2F3	0	0	0	15541	55238	-163537
	RTG	0	0	0	6612	23468	-65790

NL3/4	GW / opgw	2336	6466	20820	0	0	0
Construction/maintenance, +5°C	150C1F1	7593	20854	68536	0	0	0
Permanent loads yg= 0.9	150C1F2	7593	20569	68202	0	0	0
Wind angle: 90°	150C1F3	7593	20216	67817	0	0	0
	380C2F1	0	0	0	15187	41708	-137072
	380C2F2	0	0	0	15187	41137	-136404
	380C2F3	0	0	0	15186	40431	-135633
	RTG	0	0	0	4667	11994	-40507
NL3/1a	GW / opgw	1735	8312	22368	0	0	0
Wind, 10°C	150C1F1	6392	26006	72777	0	0	0
Permanent loads yg= 0.9	150C1F2	6392	24920	70632	0	0	0
Wind angle: -45°	150C1F3	6392	23565	68013	0	0	0
	380C2F1	0	0	0	12781	35619	-116750
	380C2F2	0	0	0	12781	35110	-116122
	380C2F3	0	0	0	12781	34481	-115397
	RTG	0	0	0	3464	9375	-31283
NL3/1b	GW / opgw	1734	5671	18504	0	0	0
Wind, -20°C	150C1F1	6387	20232	68043	0	0	0
Permanent loads yg= 0.9	150C1F2	6387	19999	67759	0	0	0
Wind angle: -45°	150C1F3	6387	19710	67430	0	0	0
	380C2F1	0	0	0	12774	36933	-132858
	380C2F2	0	0	0	12774	36815	-132809
	380C2F3	0	0	0	12774	36666	-132755
	RTG	0	0	0	3463	9663	-34924
NL3/3	GW / opgw	3305	13212	35636	0	0	0
Wind, -5°C	150C1F1	7771	27388	81353	0	0	0
Permanent loads yg= 0.9	150C1F2	7770	26553	79875	0	0	0
Wind angle: -45°	150C1F3	7770	25518	78108	0	0	0
	380C2F1	0	0	0	15539	42338	-144103
	380C2F2	0	0	0	15539	41948	-143742
	380C2F3	0	0	0	15539	41464	-143329
	RTG	0	0	0	6610	16350	-55181
NL3/4	GW / opgw	2336	6206	20501	0	0	0
Construction/maintenance, +5°C	150C1F1	7593	20156	67755	0	0	0
Permanent loads yg= 0.9	150C1F2	7593	19942	67542	0	0	0
Wind angle: -45°	150C1F3	7593	19676	67299	0	0	0
	380C2F1	0	0	0	15186	37015	-133164
	380C2F2	0	0	0	15186	36902	-133132
	380C2F3	0	0	0	15186	36759	-133099
	RTG	0	0	0	4667	10994	-39889

		Ahead			Back		
Loadcase according to 50341-3-15	Att. Point	Vertical [N]	Transversal [N]	Longitudinal [N]	Vertical [N]	Transversal [N]	Longitudinal [N]
NL3/1a	GW / opgw	0	0	0	2313	5421	-19460
Wind, 10°C	150C1F1	0	0	0	8522	19719	-71422
Permanent loads yg= 1.2	150C1F2	0	0	0	8522	19671	-71415
Wind angle: 0°	150C1F3	0	0	0	8522	19611	-71408
	380C2F1	17045	39437	142845	17045	39437	-142845
	380C2F2	17045	39342	142830	17045	39342	-142830
	380C2F3	17045	39221	142815	17045	39221	-142815
	RTG	4620	10674	38843	4620	10674	-38843
NL3/1b	GW / opgw	0	0	0	2312	5963	-22016
Wind, -20°C	150C1F1	0	0	0	8518	22161	-82039
Permanent loads yg= 1.2	150C1F2	0	0	0	8518	22147	-82040
Wind angle: 0°	150C1F3	0	0	0	8518	22130	-82043
	380C2F1	17036	44322	164077	17036	44322	-164077
	380C2F2	17036	44295	164081	17036	44295	-164081
	380C2F3	17036	44260	164085	17036	44260	-164085
	RTG	4618	11771	43625	4618	11771	-43625
NL3/3	GW / opgw	0	0	0	3883	8610	-30911
Wind, -5°C	150C1F1	0	0	0	9901	23444	-85630
Permanent loads yg= 1.2	150C1F2	0	0	0	9901	23404	-85628
Wind angle: 0°	150C1F3	0	0	0	9901	23354	-85627
	380C2F1	19802	46887	171259	19802	46887	-171259
	380C2F2	19802	46808	171256	19802	46808	-171256
	380C2F3	19802	46707	171253	19802	46707	-171253
	RTG	7767	16943	61667	7767	16943	-61667
NL3/4	GW / opgw	0	0	0	2915	6463	-23882
Construction/maintenance, +5°C	150C1F1	0	0	0	9725	21883	-81000
Permanent loads yg= 1.2	150C1F2	0	0	0	9725	21869	-81002
Wind angle: 0°	150C1F3	0	0	0	9725	21852	-81005
	380C2F1	19451	43765	162000	19451	43765	-162000
	380C2F2	19451	43738	162004	19451	43738	-162004
	380C2F3	19451	43704	162010	19451	43704	-162010
	RTG	5823	12862	47696	5823	12862	-47696
NL3/1a	GW / opgw	0	0	0	2314	8980	-24860
Wind, 10°C	150C1F1	0	0	0	8524	28843	-83359
Permanent loads yg= 1.2	150C1F2	0	0	0	8524	27877	-81663
Wind angle: 45°	150C1F3	0	0	0	8524	26679	-79631
	380C2F1	17045	43248	145217	17048	57685	-166717
	380C2F2	17045	42794	144795	17048	55754	-163327
	380C2F3	17045	42229	144312	17047	53358	-159262
	RTG	4620	11522	39293	4621	14690	-43701
NL3/1b	GW / opgw	0	0	0	2312	6761	-22572
Wind, -20°C	150C1F1	0	0	0	8518	24266	-83095
Permanent loads yg= 1.2	150C1F2	0	0	0	8518	24058	-82907
Wind angle: 45°	150C1F3	0	0	0	8518	23800	-82693
	380C2F1	17036	45318	164152	17036	48532	-166189
	380C2F2	17036	45207	164127	17036	48117	-165814
	380C2F3	17036	45066	164100	17036	47600	-165386
	RTG	4618	11997	43633	4618	12712	-44021
NL3/3	GW / opgw	0	0	0	3884	13833	-37952
Wind, -5°C	150C1F1	0	0	0	9902	30568	-93216
Permanent loads yg= 1.2	150C1F2	0	0	0	9902	29821	-92068
Wind angle: 45°	150C1F3	0	0	0	9902	28897	-90716
	380C2F1	19803	49966	172566	19805	61135	-186431
	380C2F2	19803	49606	172319	19805	59641	-184137
	380C2F3	19803	49157	172039	19804	57794	-181432
	RTG	7767	18232	62203	7768	22876	-67855
NL3/4	GW / opgw	0	0	0	2915	7208	-24240
Construction/maintenance, +5°C	150C1F1	0	0	0	9726	23915	-81781
Permanent loads yg= 1.2	150C1F2	0	0	0	9725	23718	-81634
Wind angle: 45°	150C1F3	0	0	0	9725	23473	-81468
	380C2F1	19451	44747	162016	19451	47830	-163562
	380C2F2	19451	44637	162000	19451	47436	-163268
	380C2F3	19451	44499	161985	19451	46945	-162935
	RTG	5823	13083	47686	5823	13758	-47923
NL3/1a	GW / opgw	0	0	0	2314	10178	-27217
Wind, 10°C	150C1F1	0	0	0	8525	31968	-89093
Permanent loads yg= 1.2	150C1F2	0	0	0	8525	30695	-86719
Wind angle: 90°	150C1F3	0	0	0	8524	29109	-83834
	380C2F1	17050	63935	178185	17050	63935	-178185
	380C2F2	17049	61390	173439	17049	61390	-173439
	380C2F3	17048	58219	167668	17048	58219	-167668
	RTG	4621	16077	46164	4621	16077	-46164

NL3/1b	GW / opgw	0	0	0	2312	7025	-22909
Wind, -20°C	150C1F1	0	0	0	8518	24939	-83786
Permanent loads yg= 1.2	150C1F2	0	0	0	8518	24664	-83489
Wind angle: 90°	150C1F3	0	0	0	8518	24323	-83149
	380C2F1	17036	49879	167572	17036	49879	-167572
	380C2F2	17036	49328	166979	17036	49328	-166979
	380C2F3	17036	48646	166297	17036	48646	-166297
	RTG	4618	13008	44292	4618	13008	-44292
NL3/3	GW / opgw	0	0	0	3885	15569	-41090
Wind, -5°C	150C1F1	0	0	0	9903	33002	-97207
Permanent loads yg= 1.2	150C1F2	0	0	0	9903	32007	-95535
Wind angle: 90°	150C1F3	0	0	0	9903	30774	-93540
	380C2F1	19806	66003	194414	19806	66003	-194414
	380C2F2	19806	64014	191070	19806	64014	-191070
	380C2F3	19805	61548	187080	19805	61548	-187080
	RTG	7769	24883	71068	7769	24883	-71068
NL3/4	GW / opgw	0	0	0	2915	7446	-24476
Construction/maintenance, +5°C	150C1F1	0	0	0	9726	24550	-82329
Permanent loads yg= 1.2	150C1F2	0	0	0	9726	24291	-82093
Wind angle: 90°	150C1F3	0	0	0	9726	23969	-81824
	380C2F1	19451	49100	164657	19451	49100	-164657
	380C2F2	19451	48582	164186	19451	48582	-164186
	380C2F3	19451	47938	163647	19451	47938	-163647
	RTG	5823	14030	48105	5823	14030	-48105
NL3/1a	GW / opgw	0	0	0	2313	6149	-20066
Wind, 10°C	150C1F1	0	0	0	8523	21624	-72609
Permanent loads yg= 1.2	150C1F2	0	0	0	8523	21397	-72397
Wind angle: -45°	150C1F3	0	0	0	8523	21115	-72156
	380C2F1	17048	57685	166717	17045	43248	-145217
	380C2F2	17048	55754	163327	17045	42794	-144795
	380C2F3	17047	53358	159262	17045	42229	-144312
	RTG	4621	14690	43701	4620	11522	-39293
NL3/1b	GW / opgw	0	0	0	2312	6146	-22050
Wind, -20°C	150C1F1	0	0	0	8518	22659	-82076
Permanent loads yg= 1.2	150C1F2	0	0	0	8518	22603	-82063
Wind angle: -45°	150C1F3	0	0	0	8518	22533	-82050
	380C2F1	17036	48532	166189	17036	45318	-164152
	380C2F2	17036	48117	165814	17036	45207	-164127
	380C2F3	17036	47600	165386	17036	45066	-164100
	RTG	4618	12712	44021	4618	11997	-43633
NL3/3	GW / opgw	0	0	0	3883	9707	-31669
Wind, -5°C	150C1F1	0	0	0	9901	24983	-86283
Permanent loads yg= 1.2	150C1F2	0	0	0	9901	24803	-86159
Wind angle: -45°	150C1F3	0	0	0	9901	24579	-86020
	380C2F1	19805	61135	186431	19803	49966	-172566
	380C2F2	19805	59641	184137	19803	49606	-172319
	380C2F3	19804	57794	181432	19803	49157	-172039
	RTG	7768	22876	67855	7767	18232	-62203
NL3/4	GW / opgw	0	0	0	2915	6640	-23894
Construction/maintenance, +5°C	150C1F1	0	0	0	9725	22373	-81008
Permanent loads yg= 1.2	150C1F2	0	0	0	9725	22319	-81000
Wind angle: -45°	150C1F3	0	0	0	9725	22250	-80992
	380C2F1	19451	47830	163562	19451	44747	-162016
	380C2F2	19451	47436	163268	19451	44637	-162000
	380C2F3	19451	46945	162935	19451	44499	-161985
	RTG	5823	13758	47923	5823	13083	-47686
NL3/1a	GW / opgw	0	0	0	1735	4318	-15341
Wind, 10°C	150C1F1	0	0	0	6390	15727	-56526
Permanent loads yg= 0.9	150C1F2	0	0	0	6390	15677	-56510
Wind angle: 0°	150C1F3	0	0	0	6390	15614	-56493
	380C2F1	12781	31454	113052	12781	31454	-113052
	380C2F2	12781	31354	113020	12781	31354	-113020
	380C2F3	12781	31229	112987	12781	31229	-112987
	RTG	3464	8457	30569	3464	8457	-30569
NL3/1b	GW / opgw	0	0	0	1734	4791	-17643
Wind, -20°C	150C1F1	0	0	0	6387	17949	-66319
Permanent loads yg= 0.9	150C1F2	0	0	0	6387	17935	-66319
Wind angle: 0°	150C1F3	0	0	0	6387	17917	-66321
	380C2F1	12774	35897	132637	12774	35897	-132637
	380C2F2	12774	35870	132639	12774	35870	-132639
	380C2F3	12774	35835	132641	12774	35835	-132641
	RTG	3463	9430	34888	3463	9430	-34888

NL3/3	GW / opgw	0	0	0	3304	7647	-27318
Wind, -5°C	150C1F1	0	0	0	7769	19534	-71039
Permanent loads yg= 0.9	150C1F2	0	0	0	7769	19493	-71033
Wind angle: 0°	150C1F3	0	0	0	7769	19441	-71027
	380C2F1	15538	39068	142079	15538	39068	-142079
	380C2F2	15538	38986	142066	15538	38986	-142066
	380C2F3	15538	38883	142054	15538	38883	-142054
	RTG	6610	15011	54458	6610	15011	-54458
NL3/4	GW / opgw	0	0	0	2336	5417	-19980
Construction/maintenance, +5°C	150C1F1	0	0	0	7593	18004	-66526
Permanent loads yg= 0.9	150C1F2	0	0	0	7593	17991	-66527
Wind angle: 0°	150C1F3	0	0	0	7593	17973	-66529
	380C2F1	15186	36009	133052	15186	36009	-133052
	380C2F2	15186	35981	133054	15186	35981	-133054
	380C2F3	15186	35946	133059	15186	35946	-133059
	RTG	4667	10769	39885	4667	10769	-39885
NL3/1a	GW / opgw	0	0	0	1735	8312	-22368
Wind, 10°C	150C1F1	0	0	0	6392	26006	-72777
Permanent loads yg= 0.9	150C1F2	0	0	0	6392	24920	-70632
Wind angle: 45°	150C1F3	0	0	0	6392	23565	-68013
	380C2F1	12781	35619	116750	12784	52013	-145554
	380C2F2	12781	35110	116122	12784	49840	-141264
	380C2F3	12781	34481	115397	12783	47130	-136026
	RTG	3464	9375	31283	3465	12977	-37311
NL3/1b	GW / opgw	0	0	0	1734	5671	-18504
Wind, -20°C	150C1F1	0	0	0	6387	20232	-68043
Permanent loads yg= 0.9	150C1F2	0	0	0	6387	19999	-67759
Wind angle: 45°	150C1F3	0	0	0	6387	19710	-67430
	380C2F1	12774	36933	132858	12774	40465	-136087
	380C2F2	12774	36815	132809	12774	39998	-135518
	380C2F3	12774	36666	132755	12774	39420	-134861
	RTG	3463	9663	34924	3463	10442	-35549
NL3/3	GW / opgw	0	0	0	3305	13212	-35636
Wind, -5°C	150C1F1	0	0	0	7771	27388	-81353
Permanent loads yg= 0.9	150C1F2	0	0	0	7770	26553	-79875
Wind angle: 45°	150C1F3	0	0	0	7770	25518	-78108
	380C2F1	15539	42338	144103	15541	54776	-162707
	380C2F2	15539	41948	143742	15541	53105	-159750
	380C2F3	15539	41464	143329	15540	51036	-156216
	RTG	6610	16350	55181	6611	21321	-62052
NL3/4	GW / opgw	0	0	0	2336	6206	-20501
Construction/maintenance, +5°C	150C1F1	0	0	0	7593	20156	-67755
Permanent loads yg= 0.9	150C1F2	0	0	0	7593	19942	-67542
Wind angle: 45°	150C1F3	0	0	0	7593	19676	-67299
	380C2F1	15186	37015	133164	15186	40313	-135511
	380C2F2	15186	36902	133132	15186	39884	-135085
	380C2F3	15186	36759	133099	15186	39352	-134597
	RTG	4667	10994	39889	4667	11702	-40251
NL3/1a	GW / opgw	0	0	0	1736	9613	-25111
Wind, 10°C	150C1F1	0	0	0	6393	29481	-79817
Permanent loads yg= 0.9	150C1F2	0	0	0	6393	28073	-76939
Wind angle: 90°	150C1F3	0	0	0	6392	26305	-73373
	380C2F1	12786	58962	159635	12786	58962	-159635
	380C2F2	12785	56147	153879	12785	56147	-153879
	380C2F3	12784	52610	146746	12784	52610	-146746
	RTG	3465	14539	40424	3465	14539	-40424
NL3/1b	GW / opgw	0	0	0	1734	5974	-18987
Wind, -20°C	150C1F1	0	0	0	6387	20997	-69074
Permanent loads yg= 0.9	150C1F2	0	0	0	6387	20683	-68635
Wind angle: 90°	150C1F3	0	0	0	6387	20297	-68125
	380C2F1	12774	41993	138148	12774	41993	-138148
	380C2F2	12774	41367	137270	12774	41367	-137270
	380C2F3	12774	40594	136250	12774	40594	-136250
	RTG	3463	10775	35958	3463	10775	-35958
NL3/3	GW / opgw	0	0	0	3306	15037	-39110
Wind, -5°C	150C1F1	0	0	0	7771	30099	-86377
Permanent loads yg= 0.9	150C1F2	0	0	0	7771	28994	-84294
Wind angle: 90°	150C1F3	0	0	0	7771	27619	-81769
	380C2F1	15542	60198	172755	15542	60198	-172755
	380C2F2	15542	57987	168588	15542	57987	-168588
	380C2F3	15541	55238	163537	15541	55238	-163537
	RTG	6612	23468	65790	6612	23468	-65790

NL3/4	GW / opgw	0	0	0	2336	6466	-20820
Construction/maintenance, +5°C	150C1F1	0	0	0	7593	20854	-68536
Permanent loads yg= 0.9	150C1F2	0	0	0	7593	20569	-68202
Wind angle: 90°	150C1F3	0	0	0	7593	20216	-67817
	380C2F1	15187	41708	137072	15187	41708	-137072
	380C2F2	15187	41137	136404	15187	41137	-136404
	380C2F3	15186	40431	135633	15186	40431	-135633
	RTG	4667	11994	40507	4667	11994	-40507
NL3/1a	GW / opgw	0	0	0	1735	5126	-16245
Wind, 10°C	150C1F1	0	0	0	6391	17810	-58375
Permanent loads yg= 0.9	150C1F2	0	0	0	6391	17555	-58061
Wind angle: -45°	150C1F3	0	0	0	6391	17240	-57698
	380C2F1	12784	52013	145554	12781	35619	-116750
	380C2F2	12784	49840	141264	12781	35110	-116122
	380C2F3	12783	47130	136026	12781	34481	-115397
	RTG	3465	12977	37311	3464	9375	-31283
NL3/1b	GW / opgw	0	0	0	1734	4983	-17711
Wind, -20°C	150C1F1	0	0	0	6387	18466	-66429
Permanent loads yg= 0.9	150C1F2	0	0	0	6387	18407	-66405
Wind angle: -45°	150C1F3	0	0	0	6387	18333	-66378
	380C2F1	12774	40465	136087	12774	36933	-132858
	380C2F2	12774	39998	135518	12774	36815	-132809
	380C2F3	12774	39420	134861	12774	36666	-132755
	RTG	3463	10442	35549	3463	9663	-34924
NL3/3	GW / opgw	0	0	0	3304	8802	-28293
Wind, -5°C	150C1F1	0	0	0	7769	21169	-72052
Permanent loads yg= 0.9	150C1F2	0	0	0	7769	20974	-71871
Wind angle: -45°	150C1F3	0	0	0	7769	20732	-71665
	380C2F1	15541	54776	162707	15539	42338	-144103
	380C2F2	15541	53105	159750	15539	41948	-143742
	380C2F3	15540	51036	156216	15539	41464	-143329
	RTG	6611	21321	62052	6610	16350	-55181
NL3/4	GW / opgw	0	0	0	2336	5599	-20009
Construction/maintenance, +5°C	150C1F1	0	0	0	7593	18508	-66582
Permanent loads yg= 0.9	150C1F2	0	0	0	7593	18451	-66566
Wind angle: -45°	150C1F3	0	0	0	7593	18380	-66549
	380C2F1	15186	40313	135511	15186	37015	-133164
	380C2F2	15186	39884	135085	15186	36902	-133132
	380C2F3	15186	39352	134597	15186	36759	-133099
	RTG	4667	11702	40251	4667	10994	-39889

		Ahead			Back		
Loadcase according to 50341-3-15	Att. Point	Vertical [N]	Transversal [N]	Longitudinal [N]	Vertical [N]	Transversal [N]	Longitudinal [N]
NL3/1a	GW / opgw	2313	5421	19460	2313	5421	-19460
Wind, 10°C	150C1F1	8522	19719	71422	8522	19719	-71422
Permanent loads yg= 1.2	150C1F2	8522	19671	71415	8522	19671	-71415
Wind angle: 0°	150C1F3	8522	19611	71408	8522	19611	-71408
	380C2F1	0	0	0	17045	39437	-142845
	380C2F2	0	0	0	17045	39342	-142830
	380C2F3	0	0	0	17045	39221	-142815
	RTG	0	0	0	4620	10674	-38843
NL3/1b	GW / opgw	2312	5963	22016	2312	5963	-22016
Wind, -20°C	150C1F1	8518	22161	82039	8518	22161	-82039
Permanent loads yg= 1.2	150C1F2	8518	22147	82040	8518	22147	-82040
Wind angle: 0°	150C1F3	8518	22130	82043	8518	22130	-82043
	380C2F1	0	0	0	17036	44322	-164077
	380C2F2	0	0	0	17036	44295	-164081
	380C2F3	0	0	0	17036	44260	-164085
	RTG	0	0	0	4618	11771	-43625
NL3/3	GW / opgw	3883	8610	30911	3883	8610	-30911
Wind, -5°C	150C1F1	9901	23444	85630	9901	23444	-85630
Permanent loads yg= 1.2	150C1F2	9901	23404	85628	9901	23404	-85628
Wind angle: 0°	150C1F3	9901	23354	85627	9901	23354	-85627
	380C2F1	0	0	0	19802	46887	-171259
	380C2F2	0	0	0	19802	46808	-171256
	380C2F3	0	0	0	19802	46707	-171253
	RTG	0	0	0	7767	16943	-61667
NL3/4	GW / opgw	2915	6463	23882	2915	6463	-23882
Construction/maintenance, +5°C	150C1F1	9725	21883	81000	9725	21883	-81000
Permanent loads yg= 1.2	150C1F2	9725	21869	81002	9725	21869	-81002
Wind angle: 0°	150C1F3	9725	21852	81005	9725	21852	-81005
	380C2F1	0	0	0	19451	43765	-162000
	380C2F2	0	0	0	19451	43738	-162004
	380C2F3	0	0	0	19451	43704	-162010
	RTG	0	0	0	5823	12862	-47696
NL3/1a	GW / opgw	2313	6149	20066	2314	8980	-24860
Wind, 10°C	150C1F1	8523	21624	72609	8524	28843	-83359
Permanent loads yg= 1.2	150C1F2	8523	21397	72397	8524	27877	-81663
Wind angle: 45°	150C1F3	8523	21115	72156	8524	26679	-79631
	380C2F1	0	0	0	17048	57685	-166717
	380C2F2	0	0	0	17048	55754	-163327
	380C2F3	0	0	0	17047	53358	-159262
	RTG	0	0	0	4621	14690	-43701
NL3/1b	GW / opgw	2312	6146	22050	2312	6761	-22572
Wind, -20°C	150C1F1	8518	22659	82076	8518	24266	-83095
Permanent loads yg= 1.2	150C1F2	8518	22603	82063	8518	24058	-82907
Wind angle: 45°	150C1F3	8518	22533	82050	8518	23800	-82693
	380C2F1	0	0	0	17036	48532	-166189
	380C2F2	0	0	0	17036	48117	-165814
	380C2F3	0	0	0	17036	47600	-165386
	RTG	0	0	0	4618	12712	-44021
NL3/3	GW / opgw	3883	9707	31669	3884	13833	-37952
Wind, -5°C	150C1F1	9901	24983	86283	9902	30568	-93216
Permanent loads yg= 1.2	150C1F2	9901	24803	86159	9902	29821	-92068
Wind angle: 45°	150C1F3	9901	24579	86020	9902	28897	-90716
	380C2F1	0	0	0	19805	61135	-186431
	380C2F2	0	0	0	19805	59641	-184137
	380C2F3	0	0	0	19804	57794	-181432
	RTG	0	0	0	7768	22876	-67855
NL3/4	GW / opgw	2915	6640	23894	2915	7208	-24240
Construction/maintenance, +5°C	150C1F1	9725	22373	81008	9726	23915	-81781
Permanent loads yg= 1.2	150C1F2	9725	22319	81000	9725	23718	-81634
Wind angle: 45°	150C1F3	9725	22250	80992	9725	23473	-81468
	380C2F1	0	0	0	19451	47830	-163562
	380C2F2	0	0	0	19451	47436	-163268
	380C2F3	0	0	0	19451	46945	-162935
	RTG	0	0	0	5823	13758	-47923
NL3/1a	GW / opgw	2314	10178	27217	2314	10178	-27217
Wind, 10°C	150C1F1	8525	31968	89093	8525	31968	-89093
Permanent loads yg= 1.2	150C1F2	8525	30695	86719	8525	30695	-86719
Wind angle: 90°	150C1F3	8524	29109	83834	8524	29109	-83834
	380C2F1	0	0	0	17050	63935	-178185
	380C2F2	0	0	0	17049	61390	-173439
	380C2F3	0	0	0	17048	58219	-167668
	RTG	0	0	0	4621	16077	-46164

NL3/1b	GW / opgw	2312	7025	22909	2312	7025	-22909
Wind, -20°C	150C1F1	8518	24939	83786	8518	24939	-83786
Permanent loads yg= 1.2	150C1F2	8518	24664	83489	8518	24664	-83489
Wind angle: 90°	150C1F3	8518	24323	83149	8518	24323	-83149
	380C2F1	0	0	0	17036	49879	-167572
	380C2F2	0	0	0	17036	49328	-166979
	380C2F3	0	0	0	17036	48646	-166297
	RTG	0	0	0	4618	13008	-44292
NL3/3	GW / opgw	3885	15569	41090	3885	15569	-41090
Wind, -5°C	150C1F1	9903	33002	97207	9903	33002	-97207
Permanent loads yg= 1.2	150C1F2	9903	32007	95535	9903	32007	-95535
Wind angle: 90°	150C1F3	9903	30774	93540	9903	30774	-93540
	380C2F1	0	0	0	19806	66003	-194414
	380C2F2	0	0	0	19806	64014	-191070
	380C2F3	0	0	0	19805	61548	-187080
	RTG	0	0	0	7769	24883	-71068
NL3/4	GW / opgw	2915	7446	24476	2915	7446	-24476
Construction/maintenance, +5°C	150C1F1	9726	24550	82329	9726	24550	-82329
Permanent loads yg= 1.2	150C1F2	9726	24291	82093	9726	24291	-82093
Wind angle: 90°	150C1F3	9726	23969	81824	9726	23969	-81824
	380C2F1	0	0	0	19451	49100	-164657
	380C2F2	0	0	0	19451	48582	-164186
	380C2F3	0	0	0	19451	47938	-163647
	RTG	0	0	0	5823	14030	-48105
NL3/1a	GW / opgw	2314	8980	24860	2313	6149	-20066
Wind, 10°C	150C1F1	8524	28843	83359	8523	21624	-72609
Permanent loads yg= 1.2	150C1F2	8524	27877	81663	8523	21397	-72397
Wind angle: -45°	150C1F3	8524	26679	79631	8523	21115	-72156
	380C2F1	0	0	0	17045	43248	-145217
	380C2F2	0	0	0	17045	42794	-144795
	380C2F3	0	0	0	17045	42229	-144312
	RTG	0	0	0	4620	11522	-39293
NL3/1b	GW / opgw	2312	6761	22572	2312	6146	-22050
Wind, -20°C	150C1F1	8518	24266	83095	8518	22659	-82076
Permanent loads yg= 1.2	150C1F2	8518	24058	82907	8518	22603	-82063
Wind angle: -45°	150C1F3	8518	23800	82693	8518	22533	-82050
	380C2F1	0	0	0	17036	45318	-164152
	380C2F2	0	0	0	17036	45207	-164127
	380C2F3	0	0	0	17036	45066	-164100
	RTG	0	0	0	4618	11997	-43633
NL3/3	GW / opgw	3884	13833	37952	3883	9707	-31669
Wind, -5°C	150C1F1	9902	30568	93216	9901	24983	-86283
Permanent loads yg= 1.2	150C1F2	9902	29821	92068	9901	24803	-86159
Wind angle: -45°	150C1F3	9902	28897	90716	9901	24579	-86020
	380C2F1	0	0	0	19803	49966	-172566
	380C2F2	0	0	0	19803	49606	-172319
	380C2F3	0	0	0	19803	49157	-172039
	RTG	0	0	0	7767	18232	-62203
NL3/4	GW / opgw	2915	7208	24240	2915	6640	-23894
Construction/maintenance, +5°C	150C1F1	9726	23915	81781	9725	22373	-81008
Permanent loads yg= 1.2	150C1F2	9725	23718	81634	9725	22319	-81000
Wind angle: -45°	150C1F3	9725	23473	81468	9725	22250	-80992
	380C2F1	0	0	0	19451	44747	-162016
	380C2F2	0	0	0	19451	44637	-162000
	380C2F3	0	0	0	19451	44499	-161985
	RTG	0	0	0	5823	13083	-47686
NL3/1a	GW / opgw	1735	4318	15341	1735	4318	-15341
Wind, 10°C	150C1F1	6390	15727	56526	6390	15727	-56526
Permanent loads yg= 0.9	150C1F2	6390	15677	56510	6390	15677	-56510
Wind angle: 0°	150C1F3	6390	15614	56493	6390	15614	-56493
	380C2F1	0	0	0	12781	31454	-113052
	380C2F2	0	0	0	12781	31354	-113020
	380C2F3	0	0	0	12781	31229	-112987
	RTG	0	0	0	3464	8457	-30569
NL3/1b	GW / opgw	1734	4791	17643	1734	4791	-17643
Wind, -20°C	150C1F1	6387	17949	66319	6387	17949	-66319
Permanent loads yg= 0.9	150C1F2	6387	17935	66319	6387	17935	-66319
Wind angle: 0°	150C1F3	6387	17917	66321	6387	17917	-66321
	380C2F1	0	0	0	12774	35897	-132637
	380C2F2	0	0	0	12774	35870	-132639
	380C2F3	0	0	0	12774	35835	-132641
	RTG	0	0	0	3463	9430	-34888

NL3/3	GW / opgw	3304	7647	27318	3304	7647	-27318
Wind, -5°C	150C1F1	7769	19534	71039	7769	19534	-71039
Permanent loads yg= 0.9	150C1F2	7769	19493	71033	7769	19493	-71033
Wind angle: 0°	150C1F3	7769	19441	71027	7769	19441	-71027
	380C2F1	0	0	0	15538	39068	-142079
	380C2F2	0	0	0	15538	38986	-142066
	380C2F3	0	0	0	15538	38883	-142054
	RTG	0	0	0	6610	15011	-54458
NL3/4	GW / opgw	2336	5417	19980	2336	5417	-19980
Construction/maintenance, +5°C	150C1F1	7593	18004	66526	7593	18004	-66526
Permanent loads yg= 0.9	150C1F2	7593	17991	66527	7593	17991	-66527
Wind angle: 0°	150C1F3	7593	17973	66529	7593	17973	-66529
	380C2F1	0	0	0	15186	36009	-133052
	380C2F2	0	0	0	15186	35981	-133054
	380C2F3	0	0	0	15186	35946	-133059
	RTG	0	0	0	4667	10769	-39885
NL3/1a	GW / opgw	1735	5126	16245	1735	8312	-22368
Wind, 10°C	150C1F1	6391	17810	58375	6392	26006	-72777
Permanent loads yg= 0.9	150C1F2	6391	17555	58061	6392	24920	-70632
Wind angle: 45°	150C1F3	6391	17240	57698	6392	23565	-68013
	380C2F1	0	0	0	12784	52013	-145554
	380C2F2	0	0	0	12784	49840	-141264
	380C2F3	0	0	0	12783	47130	-136026
	RTG	0	0	0	3465	12977	-37311
NL3/1b	GW / opgw	1734	4983	17711	1734	5671	-18504
Wind, -20°C	150C1F1	6387	18466	66429	6387	20232	-68043
Permanent loads yg= 0.9	150C1F2	6387	18407	66405	6387	19999	-67759
Wind angle: 45°	150C1F3	6387	18333	66378	6387	19710	-67430
	380C2F1	0	0	0	12774	40465	-136087
	380C2F2	0	0	0	12774	39998	-135518
	380C2F3	0	0	0	12774	39420	-134861
	RTG	0	0	0	3463	10442	-35549
NL3/3	GW / opgw	3304	8802	28293	3305	13212	-35636
Wind, -5°C	150C1F1	7769	21169	72052	7771	27388	-81353
Permanent loads yg= 0.9	150C1F2	7769	20974	71871	7770	26553	-79875
Wind angle: 45°	150C1F3	7769	20732	71665	7770	25518	-78108
	380C2F1	0	0	0	15541	54776	-162707
	380C2F2	0	0	0	15541	53105	-159750
	380C2F3	0	0	0	15540	51036	-156216
	RTG	0	0	0	6611	21321	-62052
NL3/4	GW / opgw	2336	5599	20009	2336	6206	-20501
Construction/maintenance, +5°C	150C1F1	7593	18508	66582	7593	20156	-67755
Permanent loads yg= 0.9	150C1F2	7593	18451	66566	7593	19942	-67542
Wind angle: 45°	150C1F3	7593	18380	66549	7593	19676	-67299
	380C2F1	0	0	0	15186	40313	-135511
	380C2F2	0	0	0	15186	39884	-135085
	380C2F3	0	0	0	15186	39352	-134597
	RTG	0	0	0	4667	11702	-40251
NL3/1a	GW / opgw	1736	9613	25111	1736	9613	-25111
Wind, 10°C	150C1F1	6393	29481	79817	6393	29481	-79817
Permanent loads yg= 0.9	150C1F2	6393	28073	76939	6393	28073	-76939
Wind angle: 90°	150C1F3	6392	26305	73373	6392	26305	-73373
	380C2F1	0	0	0	12786	58962	-159635
	380C2F2	0	0	0	12785	56147	-153879
	380C2F3	0	0	0	12784	52610	-146746
	RTG	0	0	0	3465	14539	-40424
NL3/1b	GW / opgw	1734	5974	18987	1734	5974	-18987
Wind, -20°C	150C1F1	6387	20997	69074	6387	20997	-69074
Permanent loads yg= 0.9	150C1F2	6387	20683	68635	6387	20683	-68635
Wind angle: 90°	150C1F3	6387	20297	68125	6387	20297	-68125
	380C2F1	0	0	0	12774	41993	-138148
	380C2F2	0	0	0	12774	41367	-137270
	380C2F3	0	0	0	12774	40594	-136250
	RTG	0	0	0	3463	10775	-35958
NL3/3	GW / opgw	3306	15037	39110	3306	15037	-39110
Wind, -5°C	150C1F1	7771	30099	86377	7771	30099	-86377
Permanent loads yg= 0.9	150C1F2	7771	28994	84294	7771	28994	-84294
Wind angle: 90°	150C1F3	7771	27619	81769	7771	27619	-81769
	380C2F1	0	0	0	15542	60198	-172755
	380C2F2	0	0	0	15542	57987	-168588
	380C2F3	0	0	0	15541	55238	-163537
	RTG	0	0	0	6612	23468	-65790

NL3/4	GW / opgw	2336	6466	20820	2336	6466	-20820
Construction/maintenance, +5°C	150C1F1	7593	20854	68536	7593	20854	-68536
Permanent loads yg= 0.9	150C1F2	7593	20569	68202	7593	20569	-68202
Wind angle: 90°	150C1F3	7593	20216	67817	7593	20216	-67817
	380C2F1	0	0	0	15187	41708	-137072
	380C2F2	0	0	0	15187	41137	-136404
	380C2F3	0	0	0	15186	40431	-135633
	RTG	0	0	0	4667	11994	-40507
NL3/1a	GW / opgw	1735	8312	22368	1735	5126	-16245
Wind, 10°C	150C1F1	6392	26006	72777	6391	17810	-58375
Permanent loads yg= 0.9	150C1F2	6392	24920	70632	6391	17555	-58061
Wind angle: -45°	150C1F3	6392	23565	68013	6391	17240	-57698
	380C2F1	0	0	0	12781	35619	-116750
	380C2F2	0	0	0	12781	35110	-116122
	380C2F3	0	0	0	12781	34481	-115397
	RTG	0	0	0	3464	9375	-31283
NL3/1b	GW / opgw	1734	5671	18504	1734	4983	-17711
Wind, -20°C	150C1F1	6387	20232	68043	6387	18466	-66429
Permanent loads yg= 0.9	150C1F2	6387	19999	67759	6387	18407	-66405
Wind angle: -45°	150C1F3	6387	19710	67430	6387	18333	-66378
	380C2F1	0	0	0	12774	36933	-132858
	380C2F2	0	0	0	12774	36815	-132809
	380C2F3	0	0	0	12774	36666	-132755
	RTG	0	0	0	3463	9663	-34924
NL3/3	GW / opgw	3305	13212	35636	3304	8802	-28293
Wind, -5°C	150C1F1	7771	27388	81353	7769	21169	-72052
Permanent loads yg= 0.9	150C1F2	7770	26553	79875	7769	20974	-71871
Wind angle: -45°	150C1F3	7770	25518	78108	7769	20732	-71665
	380C2F1	0	0	0	15539	42338	-144103
	380C2F2	0	0	0	15539	41948	-143742
	380C2F3	0	0	0	15539	41464	-143329
	RTG	0	0	0	6610	16350	-55181
NL3/4	GW / opgw	2336	6206	20501	2336	5599	-20009
Construction/maintenance, +5°C	150C1F1	7593	20156	67755	7593	18508	-66582
Permanent loads yg= 0.9	150C1F2	7593	19942	67542	7593	18451	-66566
Wind angle: -45°	150C1F3	7593	19676	67299	7593	18380	-66549
	380C2F1	0	0	0	15186	37015	-133164
	380C2F2	0	0	0	15186	36902	-133132
	380C2F3	0	0	0	15186	36759	-133099
	RTG	0	0	0	4667	10994	-39889

		Ahead			Back		
Loadcase according to 50341-3-15	Att. Point	Vertical [N]	Transversal [N]	Longitudinal [N]	Vertical [N]	Transversal [N]	Longitudinal [N]
NL3/1a	GW / opgw	2313	5421	19460	0	0	0
Wind, 10°C	150C1F1	8522	19719	71422	0	0	0
Permanent loads yg= 1.2	150C1F2	8522	19671	71415	0	0	0
Wind angle: 0°	150C1F3	8522	19611	71408	0	0	0
	380C2F1	17045	39437	142845	17045	39437	-142845
	380C2F2	17045	39342	142830	17045	39342	-142830
	380C2F3	17045	39221	142815	17045	39221	-142815
	RTG	0	0	0	4620	10674	-38843
NL3/1b	GW / opgw	2312	5963	22016	0	0	0
Wind, -20°C	150C1F1	8518	22161	82039	0	0	0
Permanent loads yg= 1.2	150C1F2	8518	22147	82040	0	0	0
Wind angle: 0°	150C1F3	8518	22130	82043	0	0	0
	380C2F1	17036	44322	164077	17036	44322	-164077
	380C2F2	17036	44295	164081	17036	44295	-164081
	380C2F3	17036	44260	164085	17036	44260	-164085
	RTG	0	0	0	4618	11771	-43625
NL3/3	GW / opgw	3883	8610	30911	0	0	0
Wind, -5°C	150C1F1	9901	23444	85630	0	0	0
Permanent loads yg= 1.2	150C1F2	9901	23404	85628	0	0	0
Wind angle: 0°	150C1F3	9901	23354	85627	0	0	0
	380C2F1	19802	46887	171259	19802	46887	-171259
	380C2F2	19802	46808	171256	19802	46808	-171256
	380C2F3	19802	46707	171253	19802	46707	-171253
	RTG	0	0	0	7767	16943	-61667
NL3/4	GW / opgw	2915	6463	23882	0	0	0
Construction/maintenance, +5°C	150C1F1	9725	21883	81000	0	0	0
Permanent loads yg= 1.2	150C1F2	9725	21869	81002	0	0	0
Wind angle: 0°	150C1F3	9725	21852	81005	0	0	0
	380C2F1	19451	43765	162000	19451	43765	-162000
	380C2F2	19451	43738	162004	19451	43738	-162004
	380C2F3	19451	43704	162010	19451	43704	-162010
	RTG	0	0	0	5823	12862	-47696
NL3/1a	GW / opgw	2313	6149	20066	0	0	0
Wind, 10°C	150C1F1	8523	21624	72609	0	0	0
Permanent loads yg= 1.2	150C1F2	8523	21397	72397	0	0	0
Wind angle: 45°	150C1F3	8523	21115	72156	0	0	0
	380C2F1	17045	43248	145217	17048	57685	-166717
	380C2F2	17045	42794	144795	17048	55754	-163327
	380C2F3	17045	42229	144312	17047	53358	-159262
	RTG	0	0	0	4621	14690	-43701
NL3/1b	GW / opgw	2312	6146	22050	0	0	0
Wind, -20°C	150C1F1	8518	22659	82076	0	0	0
Permanent loads yg= 1.2	150C1F2	8518	22603	82063	0	0	0
Wind angle: 45°	150C1F3	8518	22533	82050	0	0	0
	380C2F1	17036	45318	164152	17036	48532	-166189
	380C2F2	17036	45207	164127	17036	48117	-165814
	380C2F3	17036	45066	164100	17036	47600	-165386
	RTG	0	0	0	4618	12712	-44021
NL3/3	GW / opgw	3883	9707	31669	0	0	0
Wind, -5°C	150C1F1	9901	24983	86283	0	0	0
Permanent loads yg= 1.2	150C1F2	9901	24803	86159	0	0	0
Wind angle: 45°	150C1F3	9901	24579	86020	0	0	0
	380C2F1	19803	49966	172566	19805	61135	-186431
	380C2F2	19803	49606	172319	19805	59641	-184137
	380C2F3	19803	49157	172039	19804	57794	-181432
	RTG	0	0	0	7768	22876	-67855
NL3/4	GW / opgw	2915	6640	23894	0	0	0
Construction/maintenance, +5°C	150C1F1	9725	22373	81008	0	0	0
Permanent loads yg= 1.2	150C1F2	9725	22319	81000	0	0	0
Wind angle: 45°	150C1F3	9725	22250	80992	0	0	0
	380C2F1	19451	44747	162016	19451	47830	-163562
	380C2F2	19451	44637	162000	19451	47436	-163268
	380C2F3	19451	44499	161985	19451	46945	-162935
	RTG	0	0	0	5823	13758	-47923
NL3/1a	GW / opgw	2314	10178	27217	0	0	0
Wind, 10°C	150C1F1	8525	31968	89093	0	0	0
Permanent loads yg= 1.2	150C1F2	8525	30695	86719	0	0	0
Wind angle: 90°	150C1F3	8524	29109	83834	0	0	0
	380C2F1	17050	63935	178185	17050	63935	-178185
	380C2F2	17049	61390	173439	17049	61390	-173439
	380C2F3	17048	58219	167668	17048	58219	-167668
	RTG	0	0	0	4621	16077	-46164

NL3/1b	GW / opgw	2312	7025	22909	0	0	0
Wind, -20°C	150C1F1	8518	24939	83786	0	0	0
Permanent loads yg= 1.2	150C1F2	8518	24664	83489	0	0	0
Wind angle: 90°	150C1F3	8518	24323	83149	0	0	0
	380C2F1	17036	49879	167572	17036	49879	-167572
	380C2F2	17036	49328	166979	17036	49328	-166979
	380C2F3	17036	48646	166297	17036	48646	-166297
	RTG	0	0	0	4618	13008	-44292
NL3/3	GW / opgw	3885	15569	41090	0	0	0
Wind, -5°C	150C1F1	9903	33002	97207	0	0	0
Permanent loads yg= 1.2	150C1F2	9903	32007	95535	0	0	0
Wind angle: 90°	150C1F3	9903	30774	93540	0	0	0
	380C2F1	19806	66003	194414	19806	66003	-194414
	380C2F2	19806	64014	191070	19806	64014	-191070
	380C2F3	19805	61548	187080	19805	61548	-187080
	RTG	0	0	0	7769	24883	-71068
NL3/4	GW / opgw	2915	7446	24476	0	0	0
Construction/maintenance, +5°C	150C1F1	9726	24550	82329	0	0	0
Permanent loads yg= 1.2	150C1F2	9726	24291	82093	0	0	0
Wind angle: 90°	150C1F3	9726	23969	81824	0	0	0
	380C2F1	19451	49100	164657	19451	49100	-164657
	380C2F2	19451	48582	164186	19451	48582	-164186
	380C2F3	19451	47938	163647	19451	47938	-163647
	RTG	0	0	0	5823	14030	-48105
NL3/1a	GW / opgw	2314	8980	24860	0	0	0
Wind, 10°C	150C1F1	8524	28843	83359	0	0	0
Permanent loads yg= 1.2	150C1F2	8524	27877	81663	0	0	0
Wind angle: -45°	150C1F3	8524	26679	79631	0	0	0
	380C2F1	17048	57685	166717	17045	43248	-145217
	380C2F2	17048	55754	163327	17045	42794	-144795
	380C2F3	17047	53358	159262	17045	42229	-144312
	RTG	0	0	0	4620	11522	-39293
NL3/1b	GW / opgw	2312	6761	22572	0	0	0
Wind, -20°C	150C1F1	8518	24266	83095	0	0	0
Permanent loads yg= 1.2	150C1F2	8518	24058	82907	0	0	0
Wind angle: -45°	150C1F3	8518	23800	82693	0	0	0
	380C2F1	17036	48532	166189	17036	45318	-164152
	380C2F2	17036	48117	165814	17036	45207	-164127
	380C2F3	17036	47600	165386	17036	45066	-164100
	RTG	0	0	0	4618	11997	-43633
NL3/3	GW / opgw	3884	13833	37952	0	0	0
Wind, -5°C	150C1F1	9902	30568	93216	0	0	0
Permanent loads yg= 1.2	150C1F2	9902	29821	92068	0	0	0
Wind angle: -45°	150C1F3	9902	28897	90716	0	0	0
	380C2F1	19805	61135	186431	19803	49966	-172566
	380C2F2	19805	59641	184137	19803	49606	-172319
	380C2F3	19804	57794	181432	19803	49157	-172039
	RTG	0	0	0	7767	18232	-62203
NL3/4	GW / opgw	2915	7208	24240	0	0	0
Construction/maintenance, +5°C	150C1F1	9726	23915	81781	0	0	0
Permanent loads yg= 1.2	150C1F2	9725	23718	81634	0	0	0
Wind angle: -45°	150C1F3	9725	23473	81468	0	0	0
	380C2F1	19451	47830	163562	19451	44747	-162016
	380C2F2	19451	47436	163268	19451	44637	-162000
	380C2F3	19451	46945	162935	19451	44499	-161985
	RTG	0	0	0	5823	13083	-47686
NL3/1a	GW / opgw	1735	4318	15341	0	0	0
Wind, 10°C	150C1F1	6390	15727	56526	0	0	0
Permanent loads yg= 0.9	150C1F2	6390	15677	56510	0	0	0
Wind angle: 0°	150C1F3	6390	15614	56493	0	0	0
	380C2F1	12781	31454	113052	12781	31454	-113052
	380C2F2	12781	31354	113020	12781	31354	-113020
	380C2F3	12781	31229	112987	12781	31229	-112987
	RTG	0	0	0	3464	8457	-30569
NL3/1b	GW / opgw	1734	4791	17643	0	0	0
Wind, -20°C	150C1F1	6387	17949	66319	0	0	0
Permanent loads yg= 0.9	150C1F2	6387	17935	66319	0	0	0
Wind angle: 0°	150C1F3	6387	17917	66321	0	0	0
	380C2F1	12774	35897	132637	12774	35897	-132637
	380C2F2	12774	35870	132639	12774	35870	-132639
	380C2F3	12774	35835	132641	12774	35835	-132641
	RTG	0	0	0	3463	9430	-34888

NL3/3	GW / opgw	3304	7647	27318	0	0	0
Wind, -5°C	150C1F1	7769	19534	71039	0	0	0
Permanent loads yg= 0.9	150C1F2	7769	19493	71033	0	0	0
Wind angle: 0°	150C1F3	7769	19441	71027	0	0	0
	380C2F1	15538	39068	142079	15538	39068	-142079
	380C2F2	15538	38986	142066	15538	38986	-142066
	380C2F3	15538	38883	142054	15538	38883	-142054
	RTG	0	0	0	6610	15011	-54458
NL3/4	GW / opgw	2336	5417	19980	0	0	0
Construction/maintenance, +5°C	150C1F1	7593	18004	66526	0	0	0
Permanent loads yg= 0.9	150C1F2	7593	17991	66527	0	0	0
Wind angle: 0°	150C1F3	7593	17973	66529	0	0	0
	380C2F1	15186	36009	133052	15186	36009	-133052
	380C2F2	15186	35981	133054	15186	35981	-133054
	380C2F3	15186	35946	133059	15186	35946	-133059
	RTG	0	0	0	4667	10769	-39885
NL3/1a	GW / opgw	1735	5126	16245	0	0	0
Wind, 10°C	150C1F1	6391	17810	58375	0	0	0
Permanent loads yg= 0.9	150C1F2	6391	17555	58061	0	0	0
Wind angle: 45°	150C1F3	6391	17240	57698	0	0	0
	380C2F1	12781	35619	116750	12784	52013	-145554
	380C2F2	12781	35110	116122	12784	49840	-141264
	380C2F3	12781	34481	115397	12783	47130	-136026
	RTG	0	0	0	3465	12977	-37311
NL3/1b	GW / opgw	1734	4983	17711	0	0	0
Wind, -20°C	150C1F1	6387	18466	66429	0	0	0
Permanent loads yg= 0.9	150C1F2	6387	18407	66405	0	0	0
Wind angle: 45°	150C1F3	6387	18333	66378	0	0	0
	380C2F1	12774	36933	132858	12774	40465	-136087
	380C2F2	12774	36815	132809	12774	39998	-135518
	380C2F3	12774	36666	132755	12774	39420	-134861
	RTG	0	0	0	3463	10442	-35549
NL3/3	GW / opgw	3304	8802	28293	0	0	0
Wind, -5°C	150C1F1	7769	21169	72052	0	0	0
Permanent loads yg= 0.9	150C1F2	7769	20974	71871	0	0	0
Wind angle: 45°	150C1F3	7769	20732	71665	0	0	0
	380C2F1	15539	42338	144103	15541	54776	-162707
	380C2F2	15539	41948	143742	15541	53105	-159750
	380C2F3	15539	41464	143329	15540	51036	-156216
	RTG	0	0	0	6611	21321	-62052
NL3/4	GW / opgw	2336	5599	20009	0	0	0
Construction/maintenance, +5°C	150C1F1	7593	18508	66582	0	0	0
Permanent loads yg= 0.9	150C1F2	7593	18451	66566	0	0	0
Wind angle: 45°	150C1F3	7593	18380	66549	0	0	0
	380C2F1	15186	37015	133164	15186	40313	-135511
	380C2F2	15186	36902	133132	15186	39884	-135085
	380C2F3	15186	36759	133099	15186	39352	-134597
	RTG	0	0	0	4667	11702	-40251
NL3/1a	GW / opgw	1736	9613	25111	0	0	0
Wind, 10°C	150C1F1	6393	29481	79817	0	0	0
Permanent loads yg= 0.9	150C1F2	6393	28073	76939	0	0	0
Wind angle: 90°	150C1F3	6392	26305	73373	0	0	0
	380C2F1	12786	58962	159635	12786	58962	-159635
	380C2F2	12785	56147	153879	12785	56147	-153879
	380C2F3	12784	52610	146746	12784	52610	-146746
	RTG	0	0	0	3465	14539	-40424
NL3/1b	GW / opgw	1734	5974	18987	0	0	0
Wind, -20°C	150C1F1	6387	20997	69074	0	0	0
Permanent loads yg= 0.9	150C1F2	6387	20683	68635	0	0	0
Wind angle: 90°	150C1F3	6387	20297	68125	0	0	0
	380C2F1	12774	41993	138148	12774	41993	-138148
	380C2F2	12774	41367	137270	12774	41367	-137270
	380C2F3	12774	40594	136250	12774	40594	-136250
	RTG	0	0	0	3463	10775	-35958
NL3/3	GW / opgw	3306	15037	39110	0	0	0
Wind, -5°C	150C1F1	7771	30099	86377	0	0	0
Permanent loads yg= 0.9	150C1F2	7771	28994	84294	0	0	0
Wind angle: 90°	150C1F3	7771	27619	81769	0	0	0
	380C2F1	15542	60198	172755	15542	60198	-172755
	380C2F2	15542	57987	168588	15542	57987	-168588
	380C2F3	15541	55238	163537	15541	55238	-163537
	RTG	0	0	0	6612	23468	-65790

NL3/4	GW / opgw	2336	6466	20820	0	0	0
Construction/maintenance, +5°C	150C1F1	7593	20854	68536	0	0	0
Permanent loads yg= 0.9	150C1F2	7593	20569	68202	0	0	0
Wind angle: 90°	150C1F3	7593	20216	67817	0	0	0
	380C2F1	15187	41708	137072	15187	41708	-137072
	380C2F2	15187	41137	136404	15187	41137	-136404
	380C2F3	15186	40431	135633	15186	40431	-135633
	RTG	0	0	0	4667	11994	-40507
NL3/1a	GW / opgw	1735	8312	22368	0	0	0
Wind, 10°C	150C1F1	6392	26006	72777	0	0	0
Permanent loads yg= 0.9	150C1F2	6392	24920	70632	0	0	0
Wind angle: -45°	150C1F3	6392	23565	68013	0	0	0
	380C2F1	12784	52013	145554	12781	35619	-116750
	380C2F2	12784	49840	141264	12781	35110	-116122
	380C2F3	12783	47130	136026	12781	34481	-115397
	RTG	0	0	0	3464	9375	-31283
NL3/1b	GW / opgw	1734	5671	18504	0	0	0
Wind, -20°C	150C1F1	6387	20232	68043	0	0	0
Permanent loads yg= 0.9	150C1F2	6387	19999	67759	0	0	0
Wind angle: -45°	150C1F3	6387	19710	67430	0	0	0
	380C2F1	12774	40465	136087	12774	36933	-132858
	380C2F2	12774	39998	135518	12774	36815	-132809
	380C2F3	12774	39420	134861	12774	36666	-132755
	RTG	0	0	0	3463	9663	-34924
NL3/3	GW / opgw	3305	13212	35636	0	0	0
Wind, -5°C	150C1F1	7771	27388	81353	0	0	0
Permanent loads yg= 0.9	150C1F2	7770	26553	79875	0	0	0
Wind angle: -45°	150C1F3	7770	25518	78108	0	0	0
	380C2F1	15541	54776	162707	15539	42338	-144103
	380C2F2	15541	53105	159750	15539	41948	-143742
	380C2F3	15540	51036	156216	15539	41464	-143329
	RTG	0	0	0	6610	16350	-55181
NL3/4	GW / opgw	2336	6206	20501	0	0	0
Construction/maintenance, +5°C	150C1F1	7593	20156	67755	0	0	0
Permanent loads yg= 0.9	150C1F2	7593	19942	67542	0	0	0
Wind angle: -45°	150C1F3	7593	19676	67299	0	0	0
	380C2F1	15186	40313	135511	15186	37015	-133164
	380C2F2	15186	39884	135085	15186	36902	-133132
	380C2F3	15186	39352	134597	15186	36759	-133099
	RTG	0	0	0	4667	10994	-39889

Loadcase according to 50341-3-15	Att. Point	Ahead Vertical [N]	Ahead Transversal [N]	Ahead Longitudinal [N]	Back Vertical [N]	Back Transversal [N]	Back Longitudinal [N]
NL3/1a	GW / opgw	2313	5421	19460	2313	5421	-19460
Wind, 10°C	150C1F1	8522	19719	71422	8522	19719	-71422
Permanent loads yg= 1.2	150C1F2	8522	19671	71415	8522	19671	-71415
Wind angle: 0°	150C1F3	8522	19611	71408	8522	19611	-71408
	380C2F1	17045	39437	142845	17045	39437	-142845
	380C2F2	17045	39342	142830	17045	39342	-142830
	380C2F3	17045	39221	142815	17045	39221	-142815
	RTG	0	0	0	4620	10674	-38843
NL3/1b	GW / opgw	2312	5963	22016	2312	5963	-22016
Wind, -20°C	150C1F1	8518	22161	82039	8518	22161	-82039
Permanent loads yg= 1.2	150C1F2	8518	22147	82040	8518	22147	-82040
Wind angle: 0°	150C1F3	8518	22130	82043	8518	22130	-82043
	380C2F1	17036	44322	164077	17036	44322	-164077
	380C2F2	17036	44295	164081	17036	44295	-164081
	380C2F3	17036	44260	164085	17036	44260	-164085
	RTG	0	0	0	4618	11771	-43625
NL3/3	GW / opgw	3883	8610	30911	3883	8610	-30911
Wind, -5°C	150C1F1	9901	23444	85630	9901	23444	-85630
Permanent loads yg= 1.2	150C1F2	9901	23404	85628	9901	23404	-85628
Wind angle: 0°	150C1F3	9901	23354	85627	9901	23354	-85627
	380C2F1	19802	46887	171259	19802	46887	-171259
	380C2F2	19802	46808	171256	19802	46808	-171256
	380C2F3	19802	46707	171253	19802	46707	-171253
	RTG	0	0	0	7767	16943	-61667
NL3/4	GW / opgw	2915	6463	23882	2915	6463	-23882
Construction/maintenance, +5°C	150C1F1	9725	21883	81000	9725	21883	-81000
Permanent loads yg= 1.2	150C1F2	9725	21869	81002	9725	21869	-81002
Wind angle: 0°	150C1F3	9725	21852	81005	9725	21852	-81005
	380C2F1	19451	43765	162000	19451	43765	-162000
	380C2F2	19451	43738	162004	19451	43738	-162004
	380C2F3	19451	43704	162010	19451	43704	-162010
	RTG	0	0	0	5823	12862	-47696
NL3/1a	GW / opgw	2313	6149	20066	2314	8980	-24860
Wind, 10°C	150C1F1	8523	21624	72609	8524	28843	-83359
Permanent loads yg= 1.2	150C1F2	8523	21397	72397	8524	27877	-81663
Wind angle: 45°	150C1F3	8523	21115	72156	8524	26679	-79631
	380C2F1	17045	43248	145217	17048	57685	-166717
	380C2F2	17045	42794	144795	17048	55754	-163327
	380C2F3	17045	42229	144312	17047	53358	-159262
	RTG	0	0	0	4621	14690	-43701
NL3/1b	GW / opgw	2312	6146	22050	2312	6761	-22572
Wind, -20°C	150C1F1	8518	22659	82076	8518	24266	-83095
Permanent loads yg= 1.2	150C1F2	8518	22603	82063	8518	24058	-82907
Wind angle: 45°	150C1F3	8518	22533	82050	8518	23800	-82693
	380C2F1	17036	45318	164152	17036	48532	-166189
	380C2F2	17036	45207	164127	17036	48117	-165814
	380C2F3	17036	45066	164100	17036	47600	-165386
	RTG	0	0	0	4618	12712	-44021
NL3/3	GW / opgw	3883	9707	31669	3884	13833	-37952
Wind, -5°C	150C1F1	9901	24983	86283	9902	30568	-93216
Permanent loads yg= 1.2	150C1F2	9901	24803	86159	9902	29821	-92068
Wind angle: 45°	150C1F3	9901	24579	86020	9902	28897	-90716
	380C2F1	19803	49966	172566	19805	61135	-186431
	380C2F2	19803	49606	172319	19805	59641	-184137
	380C2F3	19803	49157	172039	19804	57794	-181432
	RTG	0	0	0	7768	22876	-67855
NL3/4	GW / opgw	2915	6640	23894	2915	7208	-24240
Construction/maintenance, +5°C	150C1F1	9725	22373	81008	9726	23915	-81781
Permanent loads yg= 1.2	150C1F2	9725	22319	81000	9725	23718	-81634
Wind angle: 45°	150C1F3	9725	22250	80992	9725	23473	-81468
	380C2F1	19451	44747	162016	19451	47830	-163562
	380C2F2	19451	44637	162000	19451	47436	-163268
	380C2F3	19451	44499	161985	19451	46945	-162935
	RTG	0	0	0	5823	13758	-47923
NL3/1a	GW / opgw	2314	10178	27217	2314	10178	-27217
Wind, 10°C	150C1F1	8525	31968	89093	8525	31968	-89093
Permanent loads yg= 1.2	150C1F2	8525	30695	86719	8525	30695	-86719
Wind angle: 90°	150C1F3	8524	29109	83834	8524	29109	-83834
	380C2F1	17050	63935	178185	17050	63935	-178185
	380C2F2	17049	61390	173439	17049	61390	-173439
	380C2F3	17048	58219	167668	17048	58219	-167668
	RTG	0	0	0	4621	16077	-46164

NL3/1b	GW / opgw	2312	7025	22909	2312	7025	-22909
Wind, -20°C	150C1F1	8518	24939	83786	8518	24939	-83786
Permanent loads yg= 1.2	150C1F2	8518	24664	83489	8518	24664	-83489
Wind angle: 90°	150C1F3	8518	24323	83149	8518	24323	-83149
	380C2F1	17036	49879	167572	17036	49879	-167572
	380C2F2	17036	49328	166979	17036	49328	-166979
	380C2F3	17036	48646	166297	17036	48646	-166297
	RTG	0	0	0	4618	13008	-44292
NL3/3	GW / opgw	3885	15569	41090	3885	15569	-41090
Wind, -5°C	150C1F1	9903	33002	97207	9903	33002	-97207
Permanent loads yg= 1.2	150C1F2	9903	32007	95535	9903	32007	-95535
Wind angle: 90°	150C1F3	9903	30774	93540	9903	30774	-93540
	380C2F1	19806	66003	194414	19806	66003	-194414
	380C2F2	19806	64014	191070	19806	64014	-191070
	380C2F3	19805	61548	187080	19805	61548	-187080
	RTG	0	0	0	7769	24883	-71068
NL3/4	GW / opgw	2915	7446	24476	2915	7446	-24476
Construction/maintenance, +5°C	150C1F1	9726	24550	82329	9726	24550	-82329
Permanent loads yg= 1.2	150C1F2	9726	24291	82093	9726	24291	-82093
Wind angle: 90°	150C1F3	9726	23969	81824	9726	23969	-81824
	380C2F1	19451	49100	164657	19451	49100	-164657
	380C2F2	19451	48582	164186	19451	48582	-164186
	380C2F3	19451	47938	163647	19451	47938	-163647
	RTG	0	0	0	5823	14030	-48105
NL3/1a	GW / opgw	2314	8980	24860	2313	6149	-20066
Wind, 10°C	150C1F1	8524	28843	83359	8523	21624	-72609
Permanent loads yg= 1.2	150C1F2	8524	27877	81663	8523	21397	-72397
Wind angle: -45°	150C1F3	8524	26679	79631	8523	21115	-72156
	380C2F1	17048	57685	166717	17045	43248	-145217
	380C2F2	17048	55754	163327	17045	42794	-144795
	380C2F3	17047	53358	159262	17045	42229	-144312
	RTG	0	0	0	4620	11522	-39293
NL3/1b	GW / opgw	2312	6761	22572	2312	6146	-22050
Wind, -20°C	150C1F1	8518	24266	83095	8518	22659	-82076
Permanent loads yg= 1.2	150C1F2	8518	24058	82907	8518	22603	-82063
Wind angle: -45°	150C1F3	8518	23800	82693	8518	22533	-82050
	380C2F1	17036	48532	166189	17036	45318	-164152
	380C2F2	17036	48117	165814	17036	45207	-164127
	380C2F3	17036	47600	165386	17036	45066	-164100
	RTG	0	0	0	4618	11997	-43633
NL3/3	GW / opgw	3884	13833	37952	3883	9707	-31669
Wind, -5°C	150C1F1	9902	30568	93216	9901	24983	-86283
Permanent loads yg= 1.2	150C1F2	9902	29821	92068	9901	24803	-86159
Wind angle: -45°	150C1F3	9902	28897	90716	9901	24579	-86020
	380C2F1	19805	61135	186431	19803	49966	-172566
	380C2F2	19805	59641	184137	19803	49606	-172319
	380C2F3	19804	57794	181432	19803	49157	-172039
	RTG	0	0	0	7767	18232	-62203
NL3/4	GW / opgw	2915	7208	24240	2915	6640	-23894
Construction/maintenance, +5°C	150C1F1	9726	23915	81781	9725	22373	-81008
Permanent loads yg= 1.2	150C1F2	9725	23718	81634	9725	22319	-81000
Wind angle: -45°	150C1F3	9725	23473	81468	9725	22250	-80992
	380C2F1	19451	47830	163562	19451	44747	-162016
	380C2F2	19451	47436	163268	19451	44637	-162000
	380C2F3	19451	46945	162935	19451	44499	-161985
	RTG	0	0	0	5823	13083	-47686
NL3/1a	GW / opgw	1735	4318	15341	1735	4318	-15341
Wind, 10°C	150C1F1	6390	15727	56526	6390	15727	-56526
Permanent loads yg= 0.9	150C1F2	6390	15677	56510	6390	15677	-56510
Wind angle: 0°	150C1F3	6390	15614	56493	6390	15614	-56493
	380C2F1	12781	31454	113052	12781	31454	-113052
	380C2F2	12781	31354	113020	12781	31354	-113020
	380C2F3	12781	31229	112987	12781	31229	-112987
	RTG	0	0	0	3464	8457	-30569
NL3/1b	GW / opgw	1734	4791	17643	1734	4791	-17643
Wind, -20°C	150C1F1	6387	17949	66319	6387	17949	-66319
Permanent loads yg= 0.9	150C1F2	6387	17935	66319	6387	17935	-66319
Wind angle: 0°	150C1F3	6387	17917	66321	6387	17917	-66321
	380C2F1	12774	35897	132637	12774	35897	-132637
	380C2F2	12774	35870	132639	12774	35870	-132639
	380C2F3	12774	35835	132641	12774	35835	-132641
	RTG	0	0	0	3463	9430	-34888

NL3/3	GW / opgw	3304	7647	27318	3304	7647	-27318
Wind, -5°C	150C1F1	7769	19534	71039	7769	19534	-71039
Permanent loads yg= 0.9	150C1F2	7769	19493	71033	7769	19493	-71033
Wind angle: 0°	150C1F3	7769	19441	71027	7769	19441	-71027
	380C2F1	15538	39068	142079	15538	39068	-142079
	380C2F2	15538	38986	142066	15538	38986	-142066
	380C2F3	15538	38883	142054	15538	38883	-142054
	RTG	0	0	0	6610	15011	-54458
NL3/4	GW / opgw	2336	5417	19980	2336	5417	-19980
Construction/maintenance, +5°C	150C1F1	7593	18004	66526	7593	18004	-66526
Permanent loads yg= 0.9	150C1F2	7593	17991	66527	7593	17991	-66527
Wind angle: 0°	150C1F3	7593	17973	66529	7593	17973	-66529
	380C2F1	15186	36009	133052	15186	36009	-133052
	380C2F2	15186	35981	133054	15186	35981	-133054
	380C2F3	15186	35946	133059	15186	35946	-133059
	RTG	0	0	0	4667	10769	-39885
NL3/1a	GW / opgw	1735	5126	16245	1735	8312	-22368
Wind, 10°C	150C1F1	6391	17810	58375	6392	26006	-72777
Permanent loads yg= 0.9	150C1F2	6391	17555	58061	6392	24920	-70632
Wind angle: 45°	150C1F3	6391	17240	57698	6392	23565	-68013
	380C2F1	12781	35619	116750	12784	52013	-145554
	380C2F2	12781	35110	116122	12784	49840	-141264
	380C2F3	12781	34481	115397	12783	47130	-136026
	RTG	0	0	0	3465	12977	-37311
NL3/1b	GW / opgw	1734	4983	17711	1734	5671	-18504
Wind, -20°C	150C1F1	6387	18466	66429	6387	20232	-68043
Permanent loads yg= 0.9	150C1F2	6387	18407	66405	6387	19999	-67759
Wind angle: 45°	150C1F3	6387	18333	66378	6387	19710	-67430
	380C2F1	12774	36933	132858	12774	40465	-136087
	380C2F2	12774	36815	132809	12774	39998	-135518
	380C2F3	12774	36666	132755	12774	39420	-134861
	RTG	0	0	0	3463	10442	-35549
NL3/3	GW / opgw	3304	8802	28293	3305	13212	-35636
Wind, -5°C	150C1F1	7769	21169	72052	7771	27388	-81353
Permanent loads yg= 0.9	150C1F2	7769	20974	71871	7770	26553	-79875
Wind angle: 45°	150C1F3	7769	20732	71665	7770	25518	-78108
	380C2F1	15539	42338	144103	15541	54776	-162707
	380C2F2	15539	41948	143742	15541	53105	-159750
	380C2F3	15539	41464	143329	15540	51036	-156216
	RTG	0	0	0	6611	21321	-62052
NL3/4	GW / opgw	2336	5599	20009	2336	6206	-20501
Construction/maintenance, +5°C	150C1F1	7593	18508	66582	7593	20156	-67755
Permanent loads yg= 0.9	150C1F2	7593	18451	66566	7593	19942	-67542
Wind angle: 45°	150C1F3	7593	18380	66549	7593	19676	-67299
	380C2F1	15186	37015	133164	15186	40313	-135511
	380C2F2	15186	36902	133132	15186	39884	-135085
	380C2F3	15186	36759	133099	15186	39352	-134597
	RTG	0	0	0	4667	11702	-40251
NL3/1a	GW / opgw	1736	9613	25111	1736	9613	-25111
Wind, 10°C	150C1F1	6393	29481	79817	6393	29481	-79817
Permanent loads yg= 0.9	150C1F2	6393	28073	76939	6393	28073	-76939
Wind angle: 90°	150C1F3	6392	26305	73373	6392	26305	-73373
	380C2F1	12786	58962	159635	12786	58962	-159635
	380C2F2	12785	56147	153879	12785	56147	-153879
	380C2F3	12784	52610	146746	12784	52610	-146746
	RTG	0	0	0	3465	14539	-40424
NL3/1b	GW / opgw	1734	5974	18987	1734	5974	-18987
Wind, -20°C	150C1F1	6387	20997	69074	6387	20997	-69074
Permanent loads yg= 0.9	150C1F2	6387	20683	68635	6387	20683	-68635
Wind angle: 90°	150C1F3	6387	20297	68125	6387	20297	-68125
	380C2F1	12774	41993	138148	12774	41993	-138148
	380C2F2	12774	41367	137270	12774	41367	-137270
	380C2F3	12774	40594	136250	12774	40594	-136250
	RTG	0	0	0	3463	10775	-35958
NL3/3	GW / opgw	3306	15037	39110	3306	15037	-39110
Wind, -5°C	150C1F1	7771	30099	86377	7771	30099	-86377
Permanent loads yg= 0.9	150C1F2	7771	28994	84294	7771	28994	-84294
Wind angle: 90°	150C1F3	7771	27619	81769	7771	27619	-81769
	380C2F1	15542	60198	172755	15542	60198	-172755
	380C2F2	15542	57987	168588	15542	57987	-168588
	380C2F3	15541	55238	163537	15541	55238	-163537
	RTG	0	0	0	6612	23468	-65790

NL3/4	GW / opgw	2336	6466	20820	2336	6466	-20820
Construction/maintenance, +5°C	150C1F1	7593	20854	68536	7593	20854	-68536
Permanent loads yg= 0.9	150C1F2	7593	20569	68202	7593	20569	-68202
Wind angle: 90°	150C1F3	7593	20216	67817	7593	20216	-67817
	380C2F1	15187	41708	137072	15187	41708	-137072
	380C2F2	15187	41137	136404	15187	41137	-136404
	380C2F3	15186	40431	135633	15186	40431	-135633
	RTG	0	0	0	4667	11994	-40507
NL3/1a	GW / opgw	1735	8312	22368	1735	5126	-16245
Wind, 10°C	150C1F1	6392	26006	72777	6391	17810	-58375
Permanent loads yg= 0.9	150C1F2	6392	24920	70632	6391	17555	-58061
Wind angle: -45°	150C1F3	6392	23565	68013	6391	17240	-57698
	380C2F1	12784	52013	145554	12781	35619	-116750
	380C2F2	12784	49840	141264	12781	35110	-116122
	380C2F3	12783	47130	136026	12781	34481	-115397
	RTG	0	0	0	3464	9375	-31283
NL3/1b	GW / opgw	1734	5671	18504	1734	4983	-17711
Wind, -20°C	150C1F1	6387	20232	68043	6387	18466	-66429
Permanent loads yg= 0.9	150C1F2	6387	19999	67759	6387	18407	-66405
Wind angle: -45°	150C1F3	6387	19710	67430	6387	18333	-66378
	380C2F1	12774	40465	136087	12774	36933	-132858
	380C2F2	12774	39998	135518	12774	36815	-132809
	380C2F3	12774	39420	134861	12774	36666	-132755
	RTG	0	0	0	3463	9663	-34924
NL3/3	GW / opgw	3305	13212	35636	3304	8802	-28293
Wind, -5°C	150C1F1	7771	27388	81353	7769	21169	-72052
Permanent loads yg= 0.9	150C1F2	7770	26553	79875	7769	20974	-71871
Wind angle: -45°	150C1F3	7770	25518	78108	7769	20732	-71665
	380C2F1	15541	54776	162707	15539	42338	-144103
	380C2F2	15541	53105	159750	15539	41948	-143742
	380C2F3	15540	51036	156216	15539	41464	-143329
	RTG	0	0	0	6610	16350	-55181
NL3/4	GW / opgw	2336	6206	20501	2336	5599	-20009
Construction/maintenance, +5°C	150C1F1	7593	20156	67755	7593	18508	-66582
Permanent loads yg= 0.9	150C1F2	7593	19942	67542	7593	18451	-66566
Wind angle: -45°	150C1F3	7593	19676	67299	7593	18380	-66549
	380C2F1	15186	40313	135511	15186	37015	-133164
	380C2F2	15186	39884	135085	15186	36902	-133132
	380C2F3	15186	39352	134597	15186	36759	-133099
	RTG	0	0	0	4667	10994	-39889

ZWW4AA400

Loadcases for tower strength (serviceability limit state)

		Ahead			Back		
Loadcase according to 50341-3-15	Att. Point	Vertical [N]	Transversal [N]	Longitudinal [N]	Vertical [N]	Transversal [N]	Longitudinal [N]
NL4/1a	GW / opgw	1928	4761	16779	1928	4761	-16779
Wind, 10°C	150C1F1	7101	17271	61676	7101	17271	-61676
Permanent loads yg= 1.0	150C1F2	7101	17206	61652	7101	17206	-61652
Wind angle: 0°	150C1F3	7101	17124	61626	7101	17124	-61626
	380C2F1	14202	34542	123352	14202	34542	-123352
	380C2F2	14202	34412	123304	14202	34412	-123304
	380C2F3	14202	34248	123251	14202	34248	-123251
	RTG	0	0	0	3850	9294	-33413
NL4/1b	GW / opgw	1927	5183	19144	1927	5183	-19144
Wind, -20°C	150C1F1	7097	19367	71723	7097	19367	-71723
Permanent loads yg= 1.0	150C1F2	7097	19356	71724	7097	19356	-71724
Wind angle: 0°	150C1F3	7097	19341	71726	7097	19341	-71726
	380C2F1	14194	38734	143446	14194	38734	-143446
	380C2F2	14194	38711	143449	14194	38711	-143449
	380C2F3	14194	38682	143453	14194	38682	-143453
	RTG	0	0	0	3848	10220	-37886
NL4/3	GW / opgw	6603	12605	46025	6603	12605	-46025
Wind, -5°C	150C1F1	11209	25633	94110	11209	25633	-94110
Permanent loads yg= 1.0	150C1F2	11209	25601	94112	11209	25601	-94112
Wind angle: 0°	150C1F3	11209	25559	94114	11209	25559	-94114
	380C2F1	22419	51266	188221	22419	51266	-188221
	380C2F2	22419	51201	188223	22419	51201	-188223
	380C2F3	22419	51119	188228	22419	51119	-188228
	RTG	0	0	0	13222	25028	-92102
NL4/4	GW / opgw	2429	5579	20622	2429	5579	-20622
Construction/maintenance, +5°C	150C1F1	8103	18929	70087	8103	18929	-70087
Permanent loads yg= 1.0	150C1F2	8103	18917	70088	8103	18917	-70088
Wind angle: 0°	150C1F3	8103	18903	70090	8103	18903	-70090
	380C2F1	16206	37857	140173	16206	37857	-140173
	380C2F2	16206	37835	140176	16206	37835	-140176
	380C2F3	16206	37806	140181	16206	37806	-140181
	RTG	0	0	0	4852	11099	-41168
NL4/1a	GW / opgw	1928	5835	18079	1928	9991	-26190
Wind, 10°C	150C1F1	7101	20026	64364	7104	30812	-83859
Permanent loads yg= 1.0	150C1F2	7101	19687	63915	7103	29403	-81049
Wind angle: 45°	150C1F3	7101	19269	63394	7103	27637	-77583
	380C2F1	14203	40052	128727	14207	61624	-167718
	380C2F2	14203	39375	127830	14206	58806	-162097
	380C2F3	14202	38537	126788	14206	55274	-155165
	RTG	0	0	0	3850	15277	-42756
NL4/1b	GW / opgw	1927	5336	19175	1927	5857	-19641
Wind, -20°C	150C1F1	7097	19784	71762	7097	21141	-72678
Permanent loads yg= 1.0	150C1F2	7097	19737	71750	7097	20965	-72511
Wind angle: 45°	150C1F3	7097	19678	71738	7097	20747	-72319
	380C2F1	14194	39569	143525	14195	42282	-145357
	380C2F2	14194	39475	143501	14195	41930	-145022
	380C2F3	14194	39357	143476	14194	41493	-144639
	RTG	0	0	0	3848	11011	-38244
NL4/3	GW / opgw	6603	13394	46187	6604	16051	-48504
Wind, -5°C	150C1F1	11209	26852	94417	11210	31048	-98485
Permanent loads yg= 1.0	150C1F2	11209	26712	94351	11210	30494	-97782
Wind angle: 45°	150C1F3	11209	26537	94279	11210	29807	-96965
	380C2F1	22419	53704	188833	22420	62096	-196970
	380C2F2	22419	53425	188703	22420	60987	-195564
	380C2F3	22419	53074	188559	22420	59614	-193930
	RTG	0	0	0	13222	29079	-93915
NL4/4	GW / opgw	2429	5727	20634	2429	6206	-20942
Construction/maintenance, +5°C	150C1F1	8103	19339	70099	8103	20637	-70792
Permanent loads yg= 1.0	150C1F2	8103	19293	70091	8103	20470	-70662
Wind angle: 45°	150C1F3	8103	19235	70084	8103	20263	-70513
	380C2F1	16206	38678	140198	16207	41273	-141585
	380C2F2	16206	38586	140183	16206	40941	-141323
	380C2F3	16206	38471	140168	16206	40527	-141027
	RTG	0	0	0	4852	11850	-41375
NL4/1a	GW / opgw	1929	11643	29647	1929	11643	-29647
Wind, 10°C	150C1F1	7105	35283	92941	7105	35283	-92941
Permanent loads yg= 1.0	150C1F2	7104	33478	89252	7104	33478	-89252
Wind angle: 90°	150C1F3	7104	31199	84636	7104	31199	-84636
	380C2F1	14209	70565	185882	14209	70565	-185882
	380C2F2	14208	66956	178504	14208	66956	-178504
	380C2F3	14207	62398	169272	14207	62398	-169272
	RTG	0	0	0	3851	17307	-46852

NL4/1b	GW / opgw	1927	6082	19940	1927	6082	-19940
Wind, -20°C	150C1F1	7097	21713	73295	7097	21713	-73295
Permanent loads yg= 1.0	150C1F2	7097	21479	73031	7097	21479	-73031
Wind angle: 90°	150C1F3	7097	21190	72727	7097	21190	-72727
	380C2F1	14195	43426	146590	14195	43426	-146590
	380C2F2	14195	42959	146062	14195	42959	-146062
	380C2F3	14195	42379	145453	14195	42379	-145453
	RTG	0	0	0	3848	11262	-38485
NL4/3	GW / opgw	6604	17177	49924	6604	17177	-49924
Wind, -5°C	150C1F1	11211	32857	100993	11211	32857	-100993
Permanent loads yg= 1.0	150C1F2	11210	32117	99932	11210	32117	-99932
Wind angle: 90°	150C1F3	11210	31201	98686	11210	31201	-98686
	380C2F1	22421	65715	201986	22421	65715	-201986
	380C2F2	22421	64234	199863	22421	64234	-199863
	380C2F3	22420	62403	197371	22420	62403	-197371
	RTG	0	0	0	13223	30355	-95112
NL4/4	GW / opgw	2429	6407	21151	2429	6407	-21151
Construction/maintenance, +5°C	150C1F1	8103	21174	71279	8103	21174	-71279
Permanent loads yg= 1.0	150C1F2	8103	20955	71069	8103	20955	-71069
Wind angle: 90°	150C1F3	8103	20682	70830	8103	20682	-70830
	380C2F1	16207	42348	142557	16207	42348	-142557
	380C2F2	16207	41910	142139	16207	41910	-142139
	380C2F3	16207	41365	141660	16207	41365	-141660
	RTG	0	0	0	4852	12080	-41537
NL4/1a	GW / opgw	1928	9991	26190	1928	5835	-18079
Wind, 10°C	150C1F1	7104	30812	83859	7101	20026	-64364
Permanent loads yg= 1.0	150C1F2	7103	29403	81049	7101	19687	-63915
Wind angle: -45°	150C1F3	7103	27637	77583	7101	19269	-63394
	380C2F1	14207	61624	167718	14203	40052	-128727
	380C2F2	14206	58806	162097	14203	39375	-127830
	380C2F3	14206	55274	155165	14202	38537	-126788
	RTG	0	0	0	3850	10507	-34462
NL4/1b	GW / opgw	1927	5857	19641	1927	5336	-19175
Wind, -20°C	150C1F1	7097	21141	72678	7097	19784	-71762
Permanent loads yg= 1.0	150C1F2	7097	20965	72511	7097	19737	-71750
Wind angle: -45°	150C1F3	7097	20747	72319	7097	19678	-71738
	380C2F1	14195	42282	145357	14194	39569	-143525
	380C2F2	14195	41930	145022	14194	39475	-143501
	380C2F3	14194	41493	144639	14194	39357	-143476
	RTG	0	0	0	3848	10408	-37895
NL4/3	GW / opgw	6604	16051	48504	6603	13394	-46187
Wind, -5°C	150C1F1	11210	31048	98485	11209	26852	-94417
Permanent loads yg= 1.0	150C1F2	11210	30494	97782	11209	26712	-94351
Wind angle: -45°	150C1F3	11210	29807	96965	11209	26537	-94279
	380C2F1	22420	62096	196970	22419	53704	-188833
	380C2F2	22420	60987	195564	22419	53425	-188703
	380C2F3	22420	59614	193930	22419	53074	-188559
	RTG	0	0	0	13222	25996	-92151
NL4/4	GW / opgw	2429	6206	20942	2429	5727	-20634
Construction/maintenance, +5°C	150C1F1	8103	20637	70792	8103	19339	-70099
Permanent loads yg= 1.0	150C1F2	8103	20470	70662	8103	19293	-70091
Wind angle: -45°	150C1F3	8103	20263	70513	8103	19235	-70084
	380C2F1	16207	41273	141585	16206	38678	-140198
	380C2F2	16206	40941	141323	16206	38586	-140183
	380C2F3	16206	40527	141027	16206	38471	-140168
	RTG	0	0	0	4852	11284	-41161

ZWW4AA400

Bijlage BAY

Location dependent data to obtain pressures

Wind area			2	
Terrain catagory	O=onbebouwd, B=bebouwd		O	
Hoogte		h	63.2	m
Diameter voet		d voet	3.3	m
top		d top	0.8	m
gem		d gem	2.1	m
wanddikte		t	24	mm
Oppervlakte aan voet		A	247005	mm^2
Traagheidsmoment aan voet		W_x	2.01E+08	mm^3
Weerstandsmoment aan voet		I_x	3.28E+11	mm^4
		2de orde	10.0	%
Mast: Gewicht		$F_{rep;ver}$	751	kN

Ultimate limit state	**hoogte**	F_{ver}	$F_{loodrecht}$	$F_{//}$	$F_{Samengesteld}$		
	m	kN	kN	kN	kN		
GW / opgw	62.6	3.9	15.6	-41.1	43.9	2751	kNm
150C1F1	52.6	9.9	33.0	-97.2	102.7	5400	kNm
150C1F2	42.4	9.9	32.0	-95.5	100.8	4272	kNm
150C1F3	32.2	9.9	30.8	-93.5	98.5	3171	kNm
380C2F1	52.6	19.8	66.0	-194.4	205.3	10799	kNm
380C2F2	42.4	19.8	64.0	-191.1	201.5	8544	kNm
380C2F3	32.2	19.8	61.5	-187.1	196.9	6342	kNm
RTG	22.1	7.8	24.9	-71.1	75.3	1664	kNm

Stuwdruk	$F_{hor.}$	37.6	kN
	$M_{d;wind}$	1063	kNm
Totaal	$M_{d;tot}$	43617	kNm
Totaal moment incl. 2^{ue} orde effect	$M_{d;tot}$	47979	kNm

Normaalkracht;

Optredende normaalkracht

$N_{d;geleiders}$		101	kN
$N_{d;\ e.g.\ mast}$		901	kN
$N_{s;d;totaal}$		1064	kN
Is buis plooigevoelig tgv normaalkracht:	conform NEN-EN 50341 par. 7.4.5.4	JA	
	r_a	0.60	
	A_{eff}	149019	mm^2
Optredende spanning tgv normaalkracht $N_{sd}/A_{eff} = f_{yd}/y_{m1}$		7	N/mm^2

Moment;

Optredende moment in de voet:

$M_{d;tot}$		47979	kNm
Is buis plooigevoelig tgv momentkracht:	conform NEN-EN 50341 par. 7.4.5.4	JA	
	r_a	0.90	
	W_{eff}	1.81E+08	mm^3
Optredende spaning tgv moment: $M_d/W_{eff} = f_{yd}/y_{m1}$		271	N/mm^2
Totale spanning:	s_d	271	N/mm^2
	$s_{d;toegestaan}$	284	N/mm^2

< 284 N/mm^2 = ACCOORD

==> 80% van 355 N/mm^2

Special limit state	**hoogte**	F_{ver}	$F_{loodrecht}$	$F_{//}$	$F_{Samengesteld}$		
	m	kN	kN	kN	kN		
GW / opgw	62.6	3.9	23.3	0.0	23.3	1458	kNm
150C1F1	52.6	14.2	70.6	0.0	70.6	3712	kNm
150C1F2	42.4	14.2	67.0	0.0	67.0	2839	kNm
150C1F3	32.2	14.2	62.4	0.0	62.4	2009	kNm
380C2F1	52.6	28.4	141.1	0.0	141.1	7423	kNm
380C2F2	42.4	28.4	133.9	0.0	133.9	5678	kNm
380C2F3	32.2	28.4	124.8	0.0	124.8	4018	kNm
RTG	22.1	3.9	17.3	-46.9	49.9	1104	kNm

Stuwdruk	$F_{hor.}$	1010	kN		
Verplaating		1.06	m	3.44	EIS TENNET VISUEE
Percentage van de verplaatsing		1.67%		5.5%	NEN-EN-50341
Hoek		1.72	graden		
Kromming		0.35%		1%	NEN-EN-50341
Fundatie rotatiestijfheid		0.005	rad		

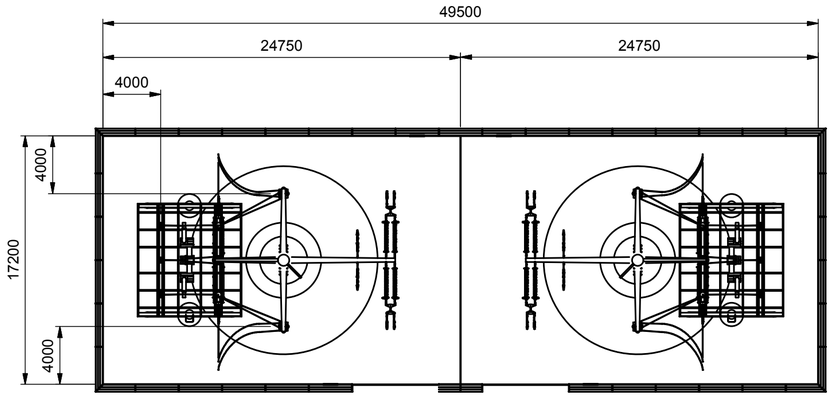

A-A

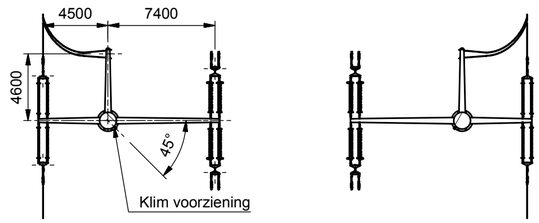

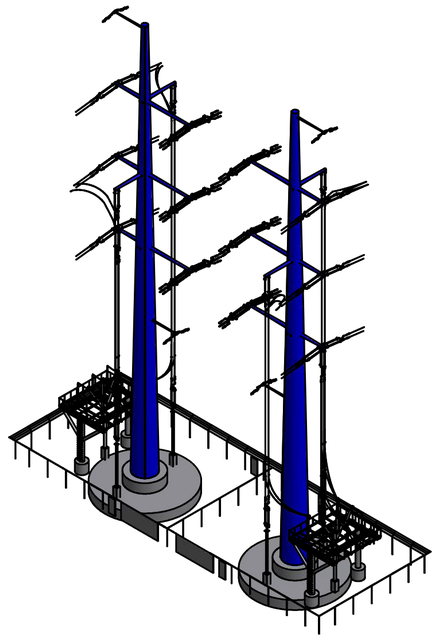

B-B

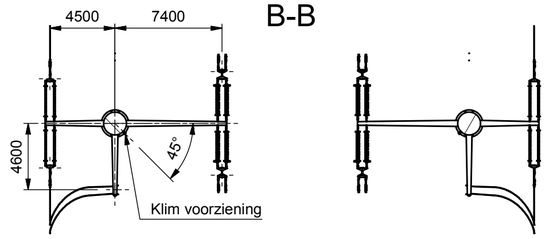

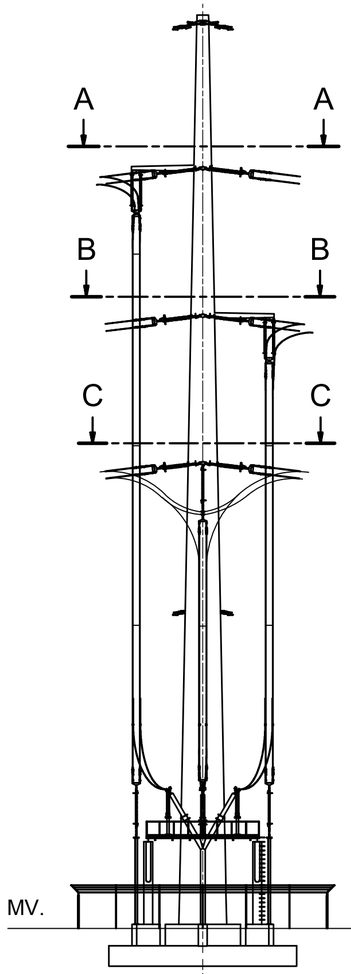

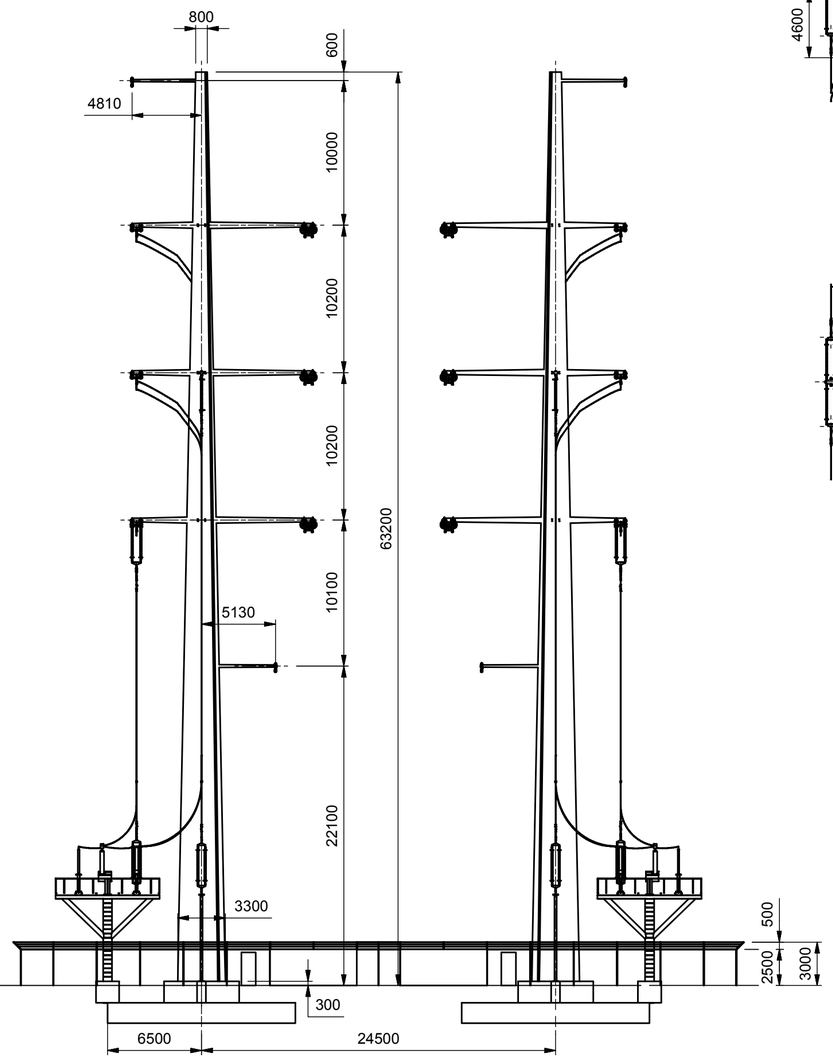

C-C

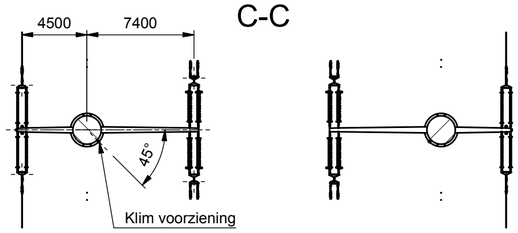

Opmerking:

Vergunning

Lijnhoek: 150 graden
Voor Detail bordes zie tekening: 74102194-035-708

Revision history

Rev.	Date	Description
1.0	26-03-2014	First edition
2.0	7-4-2014	Modification traverse

KEMA DNV

Projectname: Engineering verbinding ZW380

Third angle projection:

Drawing no.: 74102194-035-401

Design state:	WorkInProgress	Scale:	1:300
Drawn by:	SGR 7-4-2014	Units:	mm
Checked by:	APE 7-4-2014	Project no:	145.11
Approved by:	AW 7-4-2014	Company:	TenneT

Description: Mast type: ZWW4AA400 aftakking
150kV tbv inlussing
(380kV steunmast;150kV aftakking)

Revision: 2.0

Format: A2

KEMA Energy & Susstainability, Utrechtseweg 310, 6812 AR Arnhem, tel: +31 26 3 56 91 11, www.dnvkema.com

ZWW4AE400

Fundatie berekening

Bijlage CAR

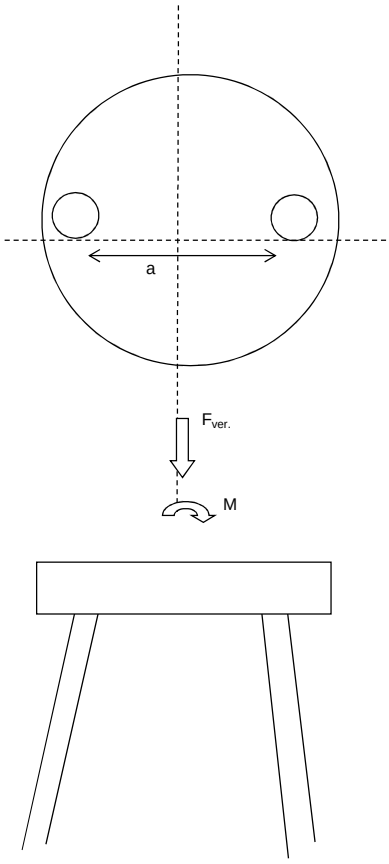

Fundatie ontwerp:
Heipaal

Afmetingen	b	400	mm	
	d	400	mm	
omtrek paal	$O_{p;gem}$	1.6	m	
schoorstand		8	:1	
α		7.125	graden	
Opstort	Diameter	5.3	m	
	Hoogte	1.8	m	
	Inhoud	39.7	m^3	
	e.g.	953	kN	
Onderplaat	Diameter	13.0	m	
	Hoogte	1.3	m	
	Inhoud	173	m^3	
	e.g.	4141	kN	
Hart paal tov rand fund.		0.6	m	
Optreden krachten				
e.g. mast		874	kN	
Fgeleiders		84	kN	
Maximale dwarskracht		1373	kN	
Fmax vert (druk)		1133	kN	
Fmin vert (trek)		849	kN	
Maximale moment		60975	kNm	
Moment				
F_{diag}		5571	kN	
F_{hor}		1373	kN	
F_{ver}		5528	kN	
Mhor (tgv Fhor)		4257	kNm	
M_{tot}		65232	kNm	reductie door opwaarste kracht water
F=M/a		5528	kN	
Verticaal reactiekracht				
Fwater (trek)		2123	kN	
Fgrond (druk)		2988	kN	
Fgrond (trek)		2490	kN	
Fdmax (druk)		5416	kN	
Ftmax (trek)		2564	kN	
Fdtot (druk)		10944	kN	
Fttot (trek)		2964	kN	
Palen druk		10	(-)	
Palen trek		10	(-)	
Totaal palen		20	(-)	Per fundering

ZWW4AE400

TREKPALEN volgens CUR 2001-4 par. 8.

$$F_{r;trek;d} = \int_0^L O_{p;gem} \times p_{r;z;d} \times dz$$

Bijlage CAR

Bepaling opneembare paalbelasting op druk

heipaal			
Afmeting paal	b	0.40	m
	b	0.40	m
omtrek paal	$O_{p;gem}$	1.60	m
paalfactor	α t	0.007	
aantal palen	M	1	
aantal sonderingen	N	1	
factor invloed aantal sonderingen	ξ	0.75	
conusweerstand over wrijvingstraject	$q_{c;z;max}$	15	MPa
	$q_{c;z;rep}$	11.25	MPa
materiaalfactor	$\gamma_{m;b4}$	1.4	
factor, wisselende belastingen	$\gamma_{m;var;qc}$	1.5	
	$q_{c;z;d}$	5.36	MPa
	$p_{r;z;d}$	37.5	kN/m²
	$F_{r;trek;d;i}$	60.0	kN/m⊥
	$F_{trek,d}$	596	kN/m

Bepaling opneembare trekbelasting paal

sondering	diepte		$q_{c;z}$		$P_{r;max;schacht;i}$	$F_{r;trek;d;i}$	$F_{trek,d}$
	m	m	MPa	α t	kPa	kN	kN
	0	-1	0	0.007	0.00	0.00	0
	-1	-2	0	0.007	0.00	0.00	0
	-2	-3	0	0.007	0.00	0.00	0
	-3	-4	0	0.007	0.00	0.00	0
	-4	-5	0	0.007	0.00	0.00	0
	-5	-6	0	0.007	0.00	0.00	0
	-6	-7	0	0.007	0.00	0.00	0
	-7	-8	0	0.007	0.00	0.00	0
	-8	-9	1	0.007	2.50	4.00	4
	-9	-10	3	0.007	7.50	12.00	16
	-10	-11	2	0.007	5.00	8.00	24
	-11	-12	0	0.007	0.00	0.00	24
	-12	-13	3	0.007	7.50	12.00	36
	-13	-14	2	0.007	5.00	8.00	44
	-14	-15	4	0.007	10.00	16.00	60
	-15	-16	10	0.007	25.00	40.00	100
	-16	-17	9	0.007	22.50	36.00	136
	-17	-18	8	0.007	20.00	32.00	168
	-18	-19	12	0.007	30.00	48.00	216
	-19	-20	12	0.007	30.00	48.00	264
	-20	-21	10	0.007	25.00	40.00	304
	-21	-22	11	0.007	27.50	44.00	348
	-22	-23	11	0.007	27.50	44.00	392
	-23	-24	12	0.007	30.00	48.00	440
	-24	-25	12	0.007	30.00	48.00	488
	-25	-26	12	0.007	30.00	48.00	536
	-26	-27	15	0.007	37.50	60.00	596

$F_{trek,d}$	596	kN	paalafmeting	400	mm, paalpuntnivo	-27.00	m

Paalgroep factor	10%	
$F_{trek,d}$	**536.4**	kN

ZWW4AE400

DRUKPALEN

FUNDERINGSCONSTRUCTIE
Toelaatbare paalbelastingen

Bijlage CAR

Bepaling opneembare paalbelasting op druk

heipaal			v		
		diameter	a	2	mm
				2	mm
		Deq		0.001808	

maximale puntweerstand

$P_{r;max;punt;i}$		11.25	MN/m²
paalklasse factor	α_p	1.00	
factor paalvoet	β	1	
hoek van inwendige vrijwing van paalvoet	ϕ	40	
factor dwarsdoorsnede paalvoet	s	1.00	
minimale waarde neergaande deel	$q_{c;II;gem}$	9.00	MN/m²
gem. sondeerwaarde neergaande deel	$q_{c;I;gem}$	14.00	MN/m₂
gem. sondeerwaarde opgaande deel	$q_{c;III;gem}$	11.00	MN/m²

maximale paalschachtwrijving

$P_{r;max;schacht;i}$		0.05	MN/m²
waarin:			
paalfactor	α_s	0.010	
conusweerstand over wrijvingstraject	$q_{c;z;a}$	5.00	MN/m²

maximale draagkracht alleenstaande paal

$\mathbf{F_{r;max;i}}$		0.00	MN
waarin:			
$\mathbf{F_{r;max;punt;i}}$		0.00	MN
paalpunt oppervlak	A_{punt}	0.00	m²
$\mathbf{F_{r;max;schacht;i}}$		0.00	MN
gemiddelde paalomtrek	$O_{p;gem}$	0.01	m
lengte schachtwrijving	Δl	15.00	m

Bepaling rekenwaarde van de maximale draagkracht

$F_{r;paal;max;d}$	MN	0.00	MN
materiaalfactor grond	$\gamma_{m;b}$	1.20	
waarde afhankelijk van aantal palen en aantal sonderingen	$\xi_{1;N}$	0.75	

$F_{r;paal;max;d}$	3 kN	mm, paalpuntnivo	-27.00	m

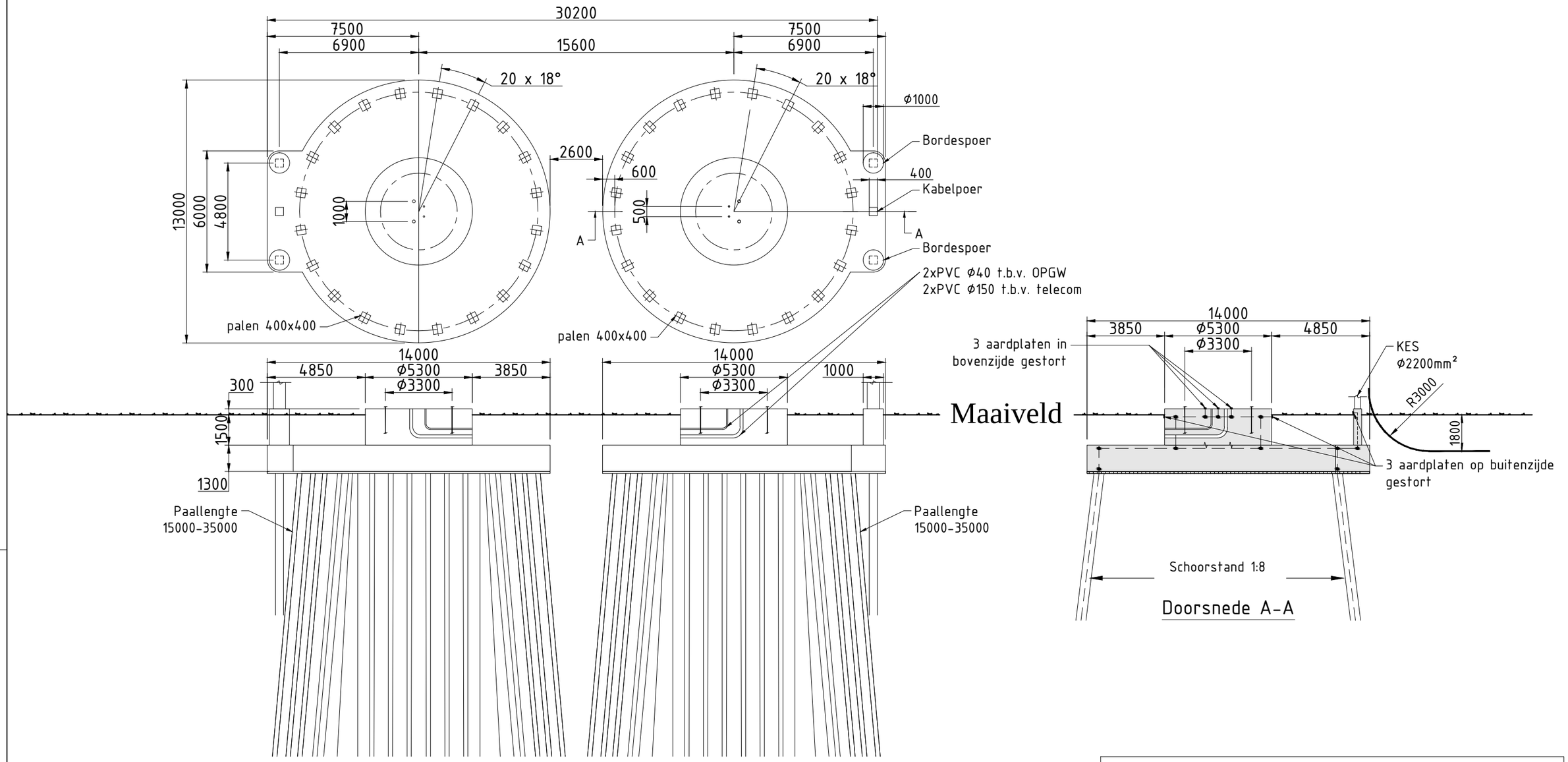

T.B.V. Vergunnings aanvraag

3.0	02-06-2014	Diverse aanpassingen
2.0	25-03-2014	Diverse aanpassingen
1.0	26-07-2013	Eerste uitgave

KEMA DNV

Projectname: Engineering verbinding ZW380

Third angle projection:

Drawing no.: 74102194-032-403

Design state: Definitief		Scale:	1:200
Drawn by: RBE	02-06-2014	Units:	mm
Checked by: AJP	02-06-2014	Project no:	000.145
Approved by: AW	02-06-2014	Company:	TenneT

Description: Principe ontwerp fundatie eindmast ZWW4AE400 masten familie

Revision: 3.0

Format: A3

DNV KEMA Energy & Sustainability, Utrechtseweg 310, 6812 AR Arnhem, tel: +31 26 3 56 91 11, www.dnvkema.com

Verklaring

Gewapend beton

Werkvloer

Verklaring aarding

Ringleiding Ø16mm (FeB220) glad

Koppeling met aardstaaf in paal

Aardplaten

Opmerkingen

Maten in mm
Coordinaten in mm, in het stelsel van de rijksdriehoekmeting
Maatvoering in het 360 graden stelsel
Vellingkanten niet getekend
Ringleiding in bovenkant poer op het bovennet
plaatsen in de eerste laag
Mastvoetanker afmeting exclusief mastvoetflens breedte
Afmetingen indicatief

© 2014 - Filename: DNV KEMA 2014 zw.dwt

ZWW4AE400

AR / NL1

Loadcases for tower strength (ultimate limit state)

		Ahead			Back		
Loadcase according to 50341-3-15	Att. Point	Vertical [N]	Transversal [N]	Longitudinal [N]	Vertical [N]	Transversal [N]	Longitudinal [N]
NL1/1a	GW / opgw	0	0	0	2313	5642	-19572
Wind, 10°C	150C1F1	0	0	0	8522	20309	-71623
Permanent loads yg= 1.2	150C1F2	0	0	0	8522	20208	-71576
Wind angle: 0°	150C1F3	0	0	0	8522	20082	-71524
	380C2F1	0	0	0	17045	40618	-143247
	380C2F2	0	0	0	17045	40417	-143152
	380C2F3	0	0	0	17045	40164	-143048
	RTG	0	0	0	4620	10939	-38915
NL1/1b	GW / opgw	0	0	0	2312	5979	-22016
Wind, -20°C	150C1F1	0	0	0	8518	22204	-82034
Permanent loads yg= 1.2	150C1F2	0	0	0	8518	22187	-82036
Wind angle: 0°	150C1F3	0	0	0	8518	22165	-82038
	380C2F1	0	0	0	17036	44409	-164069
	380C2F2	0	0	0	17036	44375	-164072
	380C2F3	0	0	0	17036	44331	-164076
	RTG	0	0	0	4618	11791	-43623
NL1/3	GW / opgw	0	0	0	9331	16292	-59274
Wind, -5°C	150C1F1	0	0	0	14688	31519	-115300
Permanent loads yg= 1.2	150C1F2	0	0	0	14688	31470	-115301
Wind angle: 0°	150C1F3	0	0	0	14688	31408	-115304
	380C2F1	0	0	0	29376	63038	-230599
	380C2F2	0	0	0	29376	62940	-230602
	380C2F3	0	0	0	29376	62816	-230608
	RTG	0	0	0	18688	32337	-118727
NL1/4	GW / opgw	0	0	0	3065	6740	-24858
Construction/maintenance, +5°C	150C1F1	0	0	0	10026	22453	-82960
Permanent loads yg= 1.2	150C1F2	0	0	0	10026	22436	-82962
Wind angle: 0°	150C1F3	0	0	0	10026	22414	-82965
	380C2F1	0	0	0	20053	44905	-165920
	380C2F2	0	0	0	20053	44871	-165924
	380C2F3	0	0	0	20053	44828	-165930
	RTG	0	0	0	6124	13407	-49654
NL1/6	GW / opgw	0	0	0	2603	5740	-21422
Permanent, +10°C	150C1F1	0	0	0	9589	21041	-78528
Permanent loads yg= 1.35	150C1F2	0	0	0	9589	21041	-78528
	150C1F3	0	0	0	9589	21041	-78528
	380C2F1	0	0	0	19177	42083	-157056
	380C2F2	0	0	0	19177	42083	-157056
	380C2F3	0	0	0	19177	42083	-157056
	RTG	0	0	0	5198	11469	-42804
NL1/1a	GW / opgw	0	0	0	2315	13636	-34239
Wind, 10°C	150C1F1	0	0	0	8527	41255	-107248
Permanent loads yg= 1.2	150C1F2	0	0	0	8527	39143	-103042
Wind angle: 45°	150C1F3	0	0	0	8526	36475	-97775
	380C2F1	0	0	0	17055	82509	-214495
	380C2F2	0	0	0	17054	78286	-206083
	380C2F3	0	0	0	17052	72950	-195550
	RTG	0	0	0	4622	20280	-54290
NL1/1b	GW / opgw	0	0	0	2312	7032	-22918
Wind, -20°C	150C1F1	0	0	0	8518	24956	-83805
Permanent loads yg= 1.2	150C1F2	0	0	0	8518	24680	-83505
Wind angle: 45°	150C1F3	0	0	0	8518	24336	-83161
	380C2F1	0	0	0	17036	49913	-167610
	380C2F2	0	0	0	17036	49359	-167011
	380C2F3	0	0	0	17036	48672	-166322
	RTG	0	0	0	4618	13016	-44300
NL1/3	GW / opgw	0	0	0	9333	21392	-62725
Wind, -5°C	150C1F1	0	0	0	14690	39726	-122166
Permanent loads yg= 1.2	150C1F2	0	0	0	14689	38885	-121082
Wind angle: 45°	150C1F3	0	0	0	14689	37844	-119815
	380C2F1	0	0	0	29380	79451	-244332
	380C2F2	0	0	0	29379	77771	-242163
	380C2F3	0	0	0	29378	75688	-239630
	RTG	0	0	0	18690	38360	-121234
NL1/4	GW / opgw	0	0	0	3066	7701	-25412
Construction/maintenance, +5°C	150C1F1	0	0	0	10027	25074	-84237
Permanent loads yg= 1.2	150C1F2	0	0	0	10027	24816	-84010
Wind angle: 45°	150C1F3	0	0	0	10026	24495	-83750
	380C2F1	0	0	0	20053	50147	-168475
	380C2F2	0	0	0	20053	49632	-168019
	380C2F3	0	0	0	20053	48990	-167500
	RTG	0	0	0	6124	14552	-50029

NL1/1a	GW / opgw	0	0	0	2316	16038	-39137
Wind, 10°C	150C1F1	0	0	0	8529	47872	-120531
Permanent loads yg= 1.2	150C1F2	0	0	0	8528	45214	-115185
Wind angle: 90°	150C1F3	0	0	0	8527	41832	-108401
	380C2F1	0	0	0	17058	95743	-241062
	380C2F2	0	0	0	17057	90427	-230369
	380C2F3	0	0	0	17055	83663	-216802
	RTG	0	0	0	4623	23333	-60459
NL1/1b	GW / opgw	0	0	0	2312	7388	-23436
Wind, -20°C	150C1F1	0	0	0	8518	25859	-84895
Permanent loads yg= 1.2	150C1F2	0	0	0	8518	25490	-84430
Wind angle: 90°	150C1F3	0	0	0	8518	25033	-83891
	380C2F1	0	0	0	17037	51718	-169791
	380C2F2	0	0	0	17037	50979	-168860
	380C2F3	0	0	0	17036	50066	-167782
	RTG	0	0	0	4618	13411	-44734
NL1/3	GW / opgw	0	0	0	9334	23040	-64696
Wind, -5°C	150C1F1	0	0	0	14691	42459	-126000
Permanent loads yg= 1.2	150C1F2	0	0	0	14690	41342	-124384
Wind angle: 90°	150C1F3	0	0	0	14690	39958	-122475
	380C2F1	0	0	0	29381	84919	-252000
	380C2F2	0	0	0	29381	82685	-248768
	380C2F3	0	0	0	29380	79915	-244949
	RTG	0	0	0	18691	40243	-122907
NL1/4	GW / opgw	0	0	0	3066	8012	-25760
Construction/maintenance, +5°C	150C1F1	0	0	0	10027	25909	-85076
Permanent loads yg= 1.2	150C1F2	0	0	0	10027	25568	-84717
Wind angle: 90°	150C1F3	0	0	0	10027	25145	-84303
	380C2F1	0	0	0	20053	51818	-170153
	380C2F2	0	0	0	20053	51136	-169433
	380C2F3	0	0	0	20053	50290	-168606
	RTG	0	0	0	6124	14905	-50305
NL1/1a	GW / opgw	0	0	0	2314	7341	-21850
Wind, 10°C	150C1F1	0	0	0	8523	24649	-76427
Permanent loads yg= 1.2	150C1F2	0	0	0	8523	24112	-75647
Wind angle: -45°	150C1F3	0	0	0	8523	23449	-74733
	380C2F1	0	0	0	17046	49298	-152854
	380C2F2	0	0	0	17046	48224	-151293
	380C2F3	0	0	0	17046	46898	-149466
	RTG	0	0	0	4620	12848	-40820
NL1/1b	GW / opgw	0	0	0	2312	6214	-22081
Wind, -20°C	150C1F1	0	0	0	8518	22840	-82131
Permanent loads yg= 1.2	150C1F2	0	0	0	8518	22769	-82107
Wind angle: -45°	150C1F3	0	0	0	8518	22678	-82081
	380C2F1	0	0	0	17036	45681	-164262
	380C2F2	0	0	0	17036	45537	-164214
	380C2F3	0	0	0	17036	45356	-164162
	RTG	0	0	0	4618	12078	-43652
NL1/3	GW / opgw	0	0	0	9332	17469	-59491
Wind, -5°C	150C1F1	0	0	0	14688	33360	-115804
Permanent loads yg= 1.2	150C1F2	0	0	0	14688	33148	-115699
Wind angle: -45°	150C1F3	0	0	0	14688	32883	-115583
	380C2F1	0	0	0	29376	66719	-231608
	380C2F2	0	0	0	29376	66297	-231398
	380C2F3	0	0	0	29376	65767	-231166
	RTG	0	0	0	18688	33785	-118778
NL1/4	GW / opgw	0	0	0	3066	6965	-24884
Construction/maintenance, +5°C	150C1F1	0	0	0	10026	23075	-83003
Permanent loads yg= 1.2	150C1F2	0	0	0	10026	23005	-82987
Wind angle: -45°	150C1F3	0	0	0	10026	22917	-82972
	380C2F1	0	0	0	20053	46149	-166005
	380C2F2	0	0	0	20053	46010	-165975
	380C2F3	0	0	0	20053	45834	-165943
	RTG	0	0	0	6124	13686	-49651
NL1//1a	GW / opgw	0	0	0	1735	4557	-15520
Wind, 10°C	150C1F1	0	0	0	6390	16356	-56872
Permanent loads yg= 0.9	150C1F2	0	0	0	6390	16247	-56795
Wind angle: 0°	150C1F3	0	0	0	6390	16112	-56708
	380C2F1	0	0	0	12781	32712	-113743
	380C2F2	0	0	0	12781	32495	-113589
	380C2F3	0	0	0	12781	32224	-113416
	RTG	0	0	0	3464	8737	-30698

NL1/1b	GW / opgw	0	0	0	1734	4807	-17644
Wind, -20°C	150C1F1	0	0	0	6387	17993	-66318
Permanent loads yg= 0.9	150C1F2	0	0	0	6387	17976	-66318
Wind angle: 0°	150C1F3	0	0	0	6387	17953	-66318
	380C2F1	0	0	0	12774	35986	-132635
	380C2F2	0	0	0	12774	35951	-132635
	380C2F3	0	0	0	12774	35907	-132637
	RTG	0	0	0	3463	9450	-34887
NL1/3	GW / opgw	0	0	0	8751	15568	-56573
Wind, -5°C	150C1F1	0	0	0	12554	28094	-102519
Permanent loads yg= 0.9	150C1F2	0	0	0	12554	28045	-102518
Wind angle: 0°	150C1F3	0	0	0	12554	27982	-102518
	380C2F1	0	0	0	25109	56188	-205038
	380C2F2	0	0	0	25109	56089	-205035
	380C2F3	0	0	0	25109	55964	-205036
	RTG	0	0	0	17529	30887	-113313
NL1/4	GW / opgw	0	0	0	2487	5711	-21016
Construction/maintenance, +5°C	150C1F1	0	0	0	7894	18612	-68628
Permanent loads yg= 0.9	150C1F2	0	0	0	7894	18595	-68629
Wind angle: 0°	150C1F3	0	0	0	7894	18573	-68631
	380C2F1	0	0	0	15788	37224	-137256
	380C2F2	0	0	0	15788	37190	-137258
	380C2F3	0	0	0	15788	37146	-137262
	RTG	0	0	0	4968	11346	-41962
NL1/6	GW / opgw	0	0	0	1735	4102	-15307
Permanent, +10°C	150C1F1	0	0	0	6390	15137	-56492
Permanent loads yg= 0.9	150C1F2	0	0	0	6390	15137	-56492
	150C1F3	0	0	0	6390	15137	-56492
	380C2F1	0	0	0	12781	30274	-112983
	380C2F2	0	0	0	12781	30274	-112983
	380C2F3	0	0	0	12781	30274	-112983
	RTG	0	0	0	3464	8190	-30564
NL1/1a	GW / opgw	0	0	0	1736	13263	-32850
Wind, 10°C	150C1F1	0	0	0	6395	39507	-100730
Permanent loads yg= 0.9	150C1F2	0	0	0	6394	37259	-96016
Wind angle: 45°	150C1F3	0	0	0	6394	34395	-90018
	380C2F1	0	0	0	12790	79014	-201459
	380C2F2	0	0	0	12789	74519	-192033
	380C2F3	0	0	0	12788	68790	-180036
	RTG	0	0	0	3466	19144	-50054
NL1/1b	GW / opgw	0	0	0	1734	5982	-19000
Wind, -20°C	150C1F1	0	0	0	6387	21016	-69102
Permanent loads yg= 0.9	150C1F2	0	0	0	6387	20701	-68659
Wind angle: 45°	150C1F3	0	0	0	6387	20312	-68144
	380C2F1	0	0	0	12774	42032	-138204
	380C2F2	0	0	0	12774	41402	-137318
	380C2F3	0	0	0	12774	40624	-136288
	RTG	0	0	0	3463	10783	-35969
NL1/3	GW / opgw	0	0	0	8753	20763	-60379
Wind, -5°C	150C1F1	0	0	0	12556	36758	-111097
Permanent loads yg= 0.9	150C1F2	0	0	0	12556	35859	-109790
Wind angle: 45°	150C1F3	0	0	0	12556	34744	-108250
	380C2F1	0	0	0	25112	73517	-222195
	380C2F2	0	0	0	25112	71717	-219580
	380C2F3	0	0	0	25111	69489	-216500
	RTG	0	0	0	17531	36995	-116144
NL1/4	GW / opgw	0	0	0	2487	6730	-21790
Construction/maintenance, +5°C	150C1F1	0	0	0	7894	21403	-70542
Permanent loads yg= 0.9	150C1F2	0	0	0	7894	21121	-70222
Wind angle: 45°	150C1F3	0	0	0	7894	20771	-69853
	380C2F1	0	0	0	15788	42807	-141084
	380C2F2	0	0	0	15788	42242	-140444
	380C2F3	0	0	0	15788	41542	-139707
	RTG	0	0	0	4968	12541	-42527
NL1/1a	GW / opgw	0	0	0	1737	15745	-38044
Wind, 10°C	150C1F1	0	0	0	6396	46464	-115283
Permanent loads yg= 0.9	150C1F2	0	0	0	6396	43683	-109477
Wind angle: 90°	150C1F3	0	0	0	6395	40118	-102012
	380C2F1	0	0	0	12793	92929	-230566
	380C2F2	0	0	0	12791	87366	-218954
	380C2F3	0	0	0	12790	80237	-204024
	RTG	0	0	0	3467	22399	-56976

NL1/1b	GW / opgw	0	0	0	1734	6393	-19722
Wind, -20°C	150C1F1	0	0	0	6387	22050	-70684
Permanent loads yg= 0.9	150C1F2	0	0	0	6387	21626	-70014
Wind angle: 90°	150C1F3	0	0	0	6387	21103	-69228
	380C2F1	0	0	0	12775	44101	-141369
	380C2F2	0	0	0	12775	43253	-140028
	380C2F3	0	0	0	12775	42207	-138457
	RTG	0	0	0	3463	11234	-36607
NL1/3	GW / opgw	0	0	0	8754	22451	-62501
Wind, -5°C	150C1F1	0	0	0	12557	39686	-115656
Permanent loads yg= 0.9	150C1F2	0	0	0	12557	38491	-113745
Wind angle: 90°	150C1F3	0	0	0	12556	37007	-111468
	380C2F1	0	0	0	25114	79372	-231311
	380C2F2	0	0	0	25113	76981	-227490
	380C2F3	0	0	0	25113	74015	-222935
	RTG	0	0	0	17532	38920	-117975
NL1/4	GW / opgw	0	0	0	2487	7070	-22246
Construction/maintenance, +5°C	150C1F1	0	0	0	7894	22325	-71703
Permanent loads yg= 0.9	150C1F2	0	0	0	7894	21948	-71208
Wind angle: 90°	150C1F3	0	0	0	7894	21482	-70634
	380C2F1	0	0	0	15789	44650	-143406
	380C2F2	0	0	0	15789	43896	-142416
	380C2F3	0	0	0	15788	42963	-141268
	RTG	0	0	0	4968	12922	-42903
NL1/1a	GW / opgw	0	0	0	1735	6484	-18653
Wind, 10°C	150C1F1	0	0	0	6391	21253	-63754
Permanent loads yg= 0.9	150C1F2	0	0	0	6391	20639	-62687
Wind angle: -45°	150C1F3	0	0	0	6391	19881	-61420
	380C2F1	0	0	0	12782	42505	-127508
	380C2F2	0	0	0	12782	41278	-125374
	380C2F3	0	0	0	12782	39762	-122840
	RTG	0	0	0	3465	10877	-33467
NL1/1b	GW / opgw	0	0	0	1734	5057	-17763
Wind, -20°C	150C1F1	0	0	0	6387	18659	-66528
Permanent loads yg= 0.9	150C1F2	0	0	0	6387	18583	-66485
Wind angle: -45°	150C1F3	0	0	0	6387	18486	-66438
	380C2F1	0	0	0	12774	37319	-133056
	380C2F2	0	0	0	12774	37165	-132971
	380C2F3	0	0	0	12774	36973	-132876
	RTG	0	0	0	3463	9749	-34960
NL1/3	GW / opgw	0	0	0	8751	16756	-56833
Wind, -5°C	150C1F1	0	0	0	12555	29991	-103232
Permanent loads yg= 0.9	150C1F2	0	0	0	12554	29771	-103094
Wind angle: -45°	150C1F3	0	0	0	12554	29495	-102939
	380C2F1	0	0	0	25109	59981	-206465
	380C2F2	0	0	0	25109	59541	-206188
	380C2F3	0	0	0	25109	58990	-205878
	RTG	0	0	0	17529	32344	-113401
NL1/4	GW / opgw	0	0	0	2487	5942	-21067
Construction/maintenance, +5°C	150C1F1	0	0	0	7894	19253	-68740
Permanent loads yg= 0.9	150C1F2	0	0	0	7894	19180	-68714
Wind angle: -45°	150C1F3	0	0	0	7894	19089	-68685
	380C2F1	0	0	0	15788	38506	-137480
	380C2F2	0	0	0	15788	38360	-137427
	380C2F3	0	0	0	15788	38177	-137369
	RTG	0	0	0	4968	11630	-41979

ZWW4AE400

Loadcases for tower strength (serviceability limit state)

		Ahead			Back		
Loadcase according to 50341-3-15	Att. Point	Vertical [N]	Transversal [N]	Longitudinal [N]	Vertical [N]	Transversal [N]	Longitudinal [N]
NL4/1a	GW / opgw	0	0	0	1928	4761	-16779
Wind, 10°C	150C1F1	0	0	0	7101	17271	-61676
Permanent loads yg= 1.0	150C1F2	0	0	0	7101	17206	-61652
Wind angle: 0°	150C1F3	0	0	0	7101	17124	-61626
	380C2F1	0	0	0	14202	34542	-123352
	380C2F2	0	0	0	14202	34412	-123304
	380C2F3	0	0	0	14202	34248	-123251
	RTG	0	0	0	3850	9294	-33413
NL4/1b	GW / opgw	0	0	0	1927	5183	-19144
Wind, -20°C	150C1F1	0	0	0	7097	19367	-71723
Permanent loads yg= 1.0	150C1F2	0	0	0	7097	19356	-71724
Wind angle: 0°	150C1F3	0	0	0	7097	19341	-71726
	380C2F1	0	0	0	14194	38734	-143446
	380C2F2	0	0	0	14194	38711	-143449
	380C2F3	0	0	0	14194	38682	-143453
	RTG	0	0	0	3848	10220	-37886
NL4/3	GW / opgw	0	0	0	6603	12605	-46025
Wind, -5°C	150C1F1	0	0	0	11209	25633	-94110
Permanent loads yg= 1.0	150C1F2	0	0	0	11209	25601	-94112
Wind angle: 0°	150C1F3	0	0	0	11209	25559	-94114
	380C2F1	0	0	0	22419	51266	-188221
	380C2F2	0	0	0	22419	51201	-188223
	380C2F3	0	0	0	22419	51119	-188228
	RTG	0	0	0	13222	25028	-92102
NL4/4	GW / opgw	0	0	0	2429	5579	-20622
Construction/maintenance, +5°C	150C1F1	0	0	0	8103	18929	-70087
Permanent loads yg= 1.0	150C1F2	0	0	0	8103	18917	-70088
Wind angle: 0°	150C1F3	0	0	0	8103	18903	-70090
	380C2F1	0	0	0	16206	37857	-140173
	380C2F2	0	0	0	16206	37835	-140176
	380C2F3	0	0	0	16206	37806	-140181
	RTG	0	0	0	4852	11099	-41168
NL4/1a	GW / opgw	0	0	0	1928	9991	-26190
Wind, 10°C	150C1F1	0	0	0	7104	30812	-83859
Permanent loads yg= 1.0	150C1F2	0	0	0	7103	29403	-81049
Wind angle: 45°	150C1F3	0	0	0	7103	27637	-77583
	380C2F1	0	0	0	14207	61624	-167718
	380C2F2	0	0	0	14206	58806	-162097
	380C2F3	0	0	0	14206	55274	-155165
	RTG	0	0	0	3850	15277	-42756
NL4/1b	GW / opgw	0	0	0	1927	5857	-19641
Wind, -20°C	150C1F1	0	0	0	7097	21141	-72678
Permanent loads yg= 1.0	150C1F2	0	0	0	7097	20965	-72511
Wind angle: 45°	150C1F3	0	0	0	7097	20747	-72319
	380C2F1	0	0	0	14195	42282	-145357
	380C2F2	0	0	0	14195	41930	-145022
	380C2F3	0	0	0	14194	41493	-144639
	RTG	0	0	0	3848	11011	-38244
NL4/3	GW / opgw	0	0	0	6604	16051	-48504
Wind, -5°C	150C1F1	0	0	0	11210	31048	-98485
Permanent loads yg= 1.0	150C1F2	0	0	0	11210	30494	-97782
Wind angle: 45°	150C1F3	0	0	0	11210	29807	-96965
	380C2F1	0	0	0	22420	62096	-196970
	380C2F2	0	0	0	22420	60987	-195564
	380C2F3	0	0	0	22420	59614	-193930
	RTG	0	0	0	13222	29079	-93915
NL4/4	GW / opgw	0	0	0	2429	6206	-20942
Construction/maintenance, +5°C	150C1F1	0	0	0	8103	20637	-70792
Permanent loads yg= 1.0	150C1F2	0	0	0	8103	20470	-70662
Wind angle: 45°	150C1F3	0	0	0	8103	20263	-70513
	380C2F1	0	0	0	16207	41273	-141585
	380C2F2	0	0	0	16206	40941	-141323
	380C2F3	0	0	0	16206	40527	-141027
	RTG	0	0	0	4852	11850	-41375
NL4/1a	GW / opgw	0	0	0	1929	11643	-29647
Wind, 10°C	150C1F1	0	0	0	7105	35283	-92941
Permanent loads yg= 1.0	150C1F2	0	0	0	7104	33478	-89252
Wind angle: 90°	150C1F3	0	0	0	7104	31199	-84636
	380C2F1	0	0	0	14209	70565	-185882
	380C2F2	0	0	0	14208	66956	-178504
	380C2F3	0	0	0	14207	62398	-169272
	RTG	0	0	0	3851	17307	-46852

NL4/1b	GW / opgw	0	0	0	1927	6082	-19940
Wind, -20°C	150C1F1	0	0	0	7097	21713	-73295
Permanent loads yg= 1.0	150C1F2	0	0	0	7097	21479	-73031
Wind angle: 90°	150C1F3	0	0	0	7097	21190	-72727
	380C2F1	0	0	0	14195	43426	-146590
	380C2F2	0	0	0	14195	42959	-146062
	380C2F3	0	0	0	14195	42379	-145453
	RTG	0	0	0	3848	11262	-38485
NL4/3	GW / opgw	0	0	0	6604	17177	-49924
Wind, -5°C	150C1F1	0	0	0	11211	32857	-100993
Permanent loads yg= 1.0	150C1F2	0	0	0	11210	32117	-99932
Wind angle: 90°	150C1F3	0	0	0	11210	31201	-98686
	380C2F1	0	0	0	22421	65715	-201986
	380C2F2	0	0	0	22421	64234	-199863
	380C2F3	0	0	0	22420	62403	-197371
	RTG	0	0	0	13223	30355	-95112
NL4/4	GW / opgw	0	0	0	2429	6407	-21151
Construction/maintenance, +5°C	150C1F1	0	0	0	8103	21174	-71279
Permanent loads yg= 1.0	150C1F2	0	0	0	8103	20955	-71069
Wind angle: 90°	150C1F3	0	0	0	8103	20682	-70830
	380C2F1	0	0	0	16207	42348	-142557
	380C2F2	0	0	0	16207	41910	-142139
	380C2F3	0	0	0	16207	41365	-141660
	RTG	0	0	0	4852	12080	-41537
NL4/1a	GW / opgw	0	0	0	1928	5835	-18079
Wind, 10°C	150C1F1	0	0	0	7101	20026	-64364
Permanent loads yg= 1.0	150C1F2	0	0	0	7101	19687	-63915
Wind angle: -45°	150C1F3	0	0	0	7101	19269	-63394
	380C2F1	0	0	0	14203	40052	-128727
	380C2F2	0	0	0	14203	39375	-127830
	380C2F3	0	0	0	14202	38537	-126788
	RTG	0	0	0	3850	10507	-34462
NL4/1b	GW / opgw	0	0	0	1927	5336	-19175
Wind, -20°C	150C1F1	0	0	0	7097	19784	-71762
Permanent loads yg= 1.0	150C1F2	0	0	0	7097	19737	-71750
Wind angle: -45°	150C1F3	0	0	0	7097	19678	-71738
	380C2F1	0	0	0	14194	39569	-143525
	380C2F2	0	0	0	14194	39475	-143501
	380C2F3	0	0	0	14194	39357	-143476
	RTG	0	0	0	3848	10408	-37895
NL4/3	GW / opgw	0	0	0	6603	13394	-46187
Wind, -5°C	150C1F1	0	0	0	11209	26852	-94417
Permanent loads yg= 1.0	150C1F2	0	0	0	11209	26712	-94351
Wind angle: -45°	150C1F3	0	0	0	11209	26537	-94279
	380C2F1	0	0	0	22419	53704	-188833
	380C2F2	0	0	0	22419	53425	-188703
	380C2F3	0	0	0	22419	53074	-188559
	RTG	0	0	0	13222	25996	-92151
NL4/4	GW / opgw	0	0	0	2429	5727	-20634
Construction/maintenance, +5°C	150C1F1	0	0	0	8103	19339	-70099
Permanent loads yg= 1.0	150C1F2	0	0	0	8103	19293	-70091
Wind angle: -45°	150C1F3	0	0	0	8103	19235	-70084
	380C2F1	0	0	0	16206	38678	-140198
	380C2F2	0	0	0	16206	38586	-140183
	380C2F3	0	0	0	16206	38471	-140168
	RTG	0	0	0	4852	11284	-41161

ZWW4AE400

Bijlage BAR

Location dependent data to obtain pressures

Wind area			2	
Terrain catagory	O=onbebouwd, B=bebouwd		O	
Hoogte		h	63.2	m
Diameter voet		d voet	3.3	m
top		d top	0.8	m
gem		d gem	2.1	m
wanddikte		t	28	mm
Oppervlakte aan voet		A	287820	mm^2
Traagheidsmoment aan voet		W_x	2.33E+08	mm^3
Weerstandsmoment aan voet		I_x	3.81E+11	mm^4
		2de orde	10.0	%
Mast: Gewicht		$F_{rep;ver}$	874	kN

Ultimate limit state	**hoogte**	F_{ver}	$F_{loodrecht}$	$F_{//}$	$F_{Samengesteld}$		
	m	kN	kN	kN	kN		
GW / opgw	62.6	2.3	16.0	-39.1	42.3	2751	kNm
150C1F1	52.6	8.5	47.9	-120.5	129.7	5400	kNm
150C1F2	42.4	8.5	45.2	-115.2	123.7	4272	kNm
150C1F3	32.2	8.5	41.8	-108.4	116.2	3171	kNm
380C2F1	52.6	17.1	95.7	-241.1	259.4	10799	kNm
380C2F2	42.4	17.1	90.4	-230.4	247.5	8544	kNm
380C2F3	32.2	17.1	83.7	-216.8	232.4	6342	kNm
RTG	22.1	4.6	23.3	-60.5	64.8	1664	kNm

Stuwdruk	$F_{hor.}$	37.6	kN
	$M_{d;wind}$	1063	kNm
Totaal	$M_{d;tot}$	55432	kNm
Totaal moment incl. 2de orde effect	$M_{d;tot}$	60975	kNm

Normaalkracht;

Optredende normaalkracht

$N_{d;geleiders}$		84	kN
$N_{d;\ e.g.\ mast}$		1049	kN
$N_{s;d;totaal}$		1133	kN

Is buis plooigevoelig tgv normaalkracht: conform NEN-EN 50341 par. 7.4.5.4 — JA

	ρ_a	0.65	
	A_{eff}	188192	mm^2

Optredende spanning tgv normaalkracht

$N_{sd}/A_{eff} = f_{yd}/y_{m1}$ — 6 N/mm^2

Moment;

Optredende moment in de voet:

$M_{d;tot}$ — 60975 kNm

Is buis plooigevoelig tgv momentkracht: conform NEN-EN 50341 par. 7.4.5.4 — JA

	ρ_a	0.95	
	W_{eff}	2.23E+08	mm^3

Optredende spaning tgv moment:

$M_d/W_{eff} = f_{yd}/y_{m1}$ — 274 N/mm^2

Totale spanning:	σ_d	280	N/mm^2	< 284 N/mm^2 = ACCOORD
	$\sigma_{d;toegestaan}$	284	N/mm^2	==> 80% van 355 N/mm^2

Special limit state	**hoogte**	F_{ver}	$F_{loodrecht}$	$F_{//}$	$F_{Samengesteld}$		
	m	kN	kN	kN	kN		
GW / opgw	62.6	1.9	11.6	-29.6	31.9	1994	kNm
150C1F1	52.6	7.1	35.3	-92.9	99.4	5229	kNm
150C1F2	42.4	7.1	33.5	-89.3	95.3	4042	kNm
150C1F3	32.2	7.1	31.2	-84.6	90.2	2905	kNm
380C2F1	52.6	14.2	70.6	-185.9	198.8	10458	kNm
380C2F2	42.4	14.2	67.0	-178.5	190.6	8083	kNm
380C2F3	32.2	14.2	62.4	-169.3	180.4	5809	kNm
RTG	22.1	3.9	17.3	-46.9	49.9	1104	kNm

Stuwdruk	$F_{hor.}$	1010	kN		
Verplaating		1.20	m	3.44	EIS TENNET VISUEEL
Percentage van de verplaatsing		1.90%		5.5%	NEN-EN-50341
Hoek		1.98	graden		
Kromming		0.42%		1%	NEN-EN-50341
Fundatie rotatiestijfheid		0.005	rad		

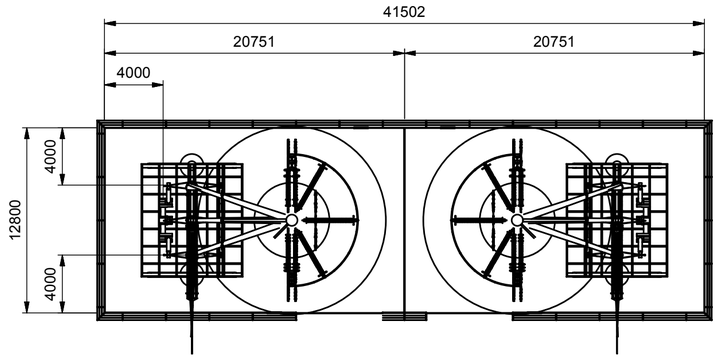

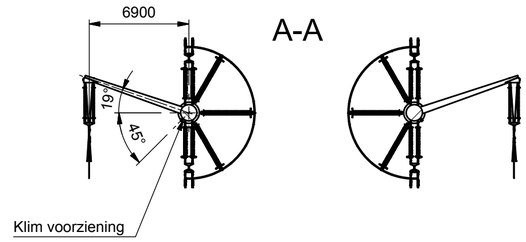

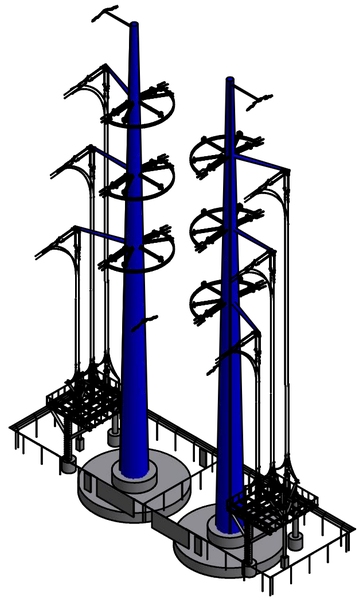

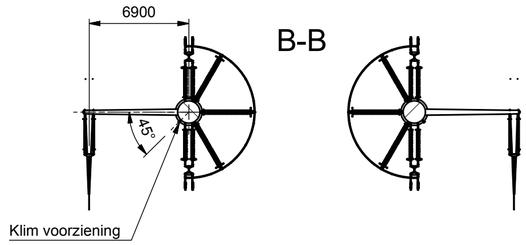

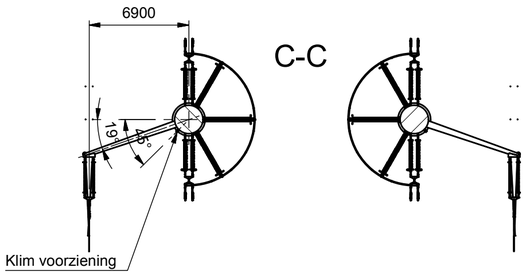

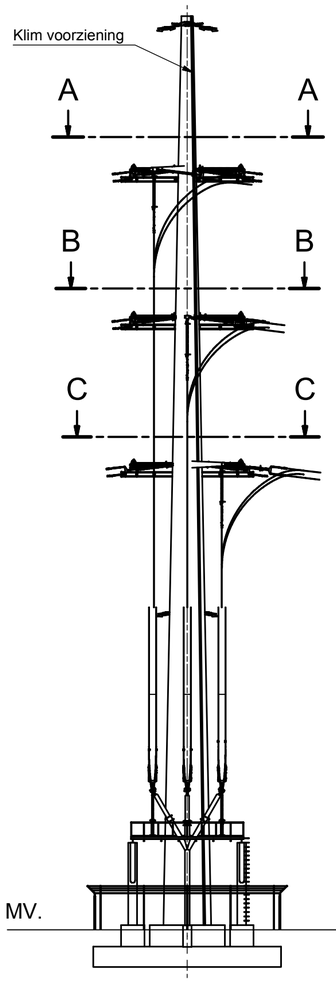

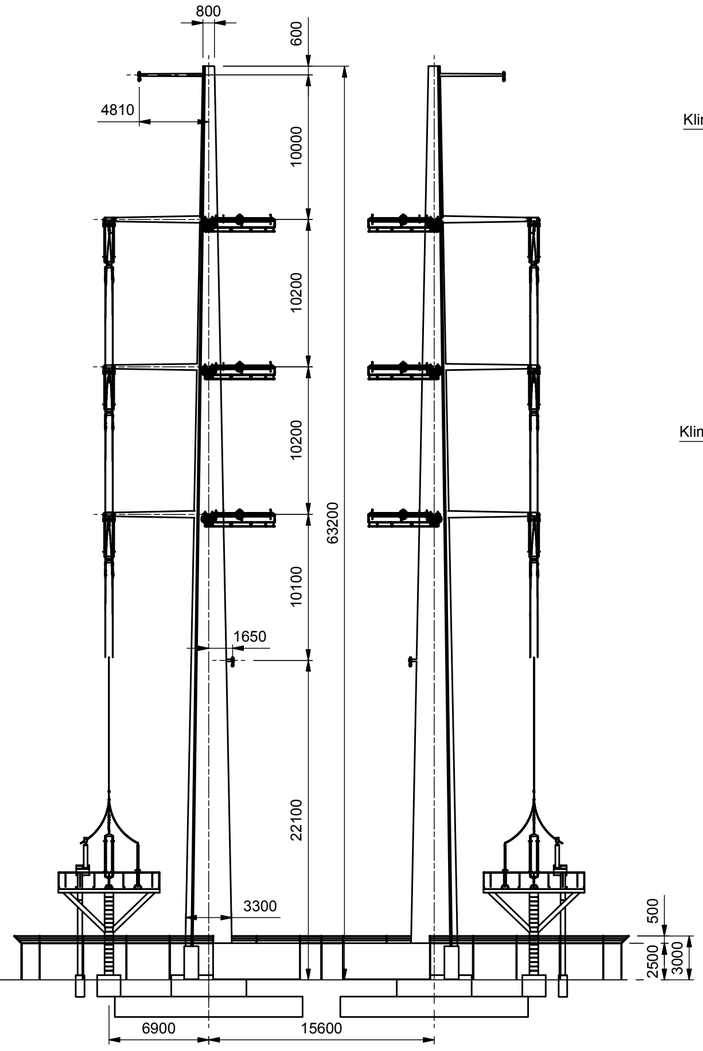

Opmerking:

Lijnhoek 150 graden

Voor Detail bordes zie tekening: 74102194-035-709

Vergunning

Revision history

Rev.	Date	Description
1.0	26-03-2014	First edition
2.0	7-4-2014	Modification traverse

KEMA DNV

Projectname: Engineering verbinding ZW380

Third angle projection:

Drawing no.: 74102194-035-403

Design state:	WorkInProgress	Scale:	1:300
Drawn by:	SGR 7-4-2014	Units:	mm
Checked by:	APE 7-4-2014	Project no:	145.11
Approved by:	AW 7-4-2014	Company:	TenneT

Description: Masttype: ZWW4AE400 opstijgpunt

150kV tbv inlussing
(380kV eindmast;150kV eindmast)

Revision: 2.0

Format: A2

KEMA Energy & Sustainability, Utrechtseweg 310, 6812 AR Arnhem, tel: +31 26 3 56 91 11, www.dnvkema.com

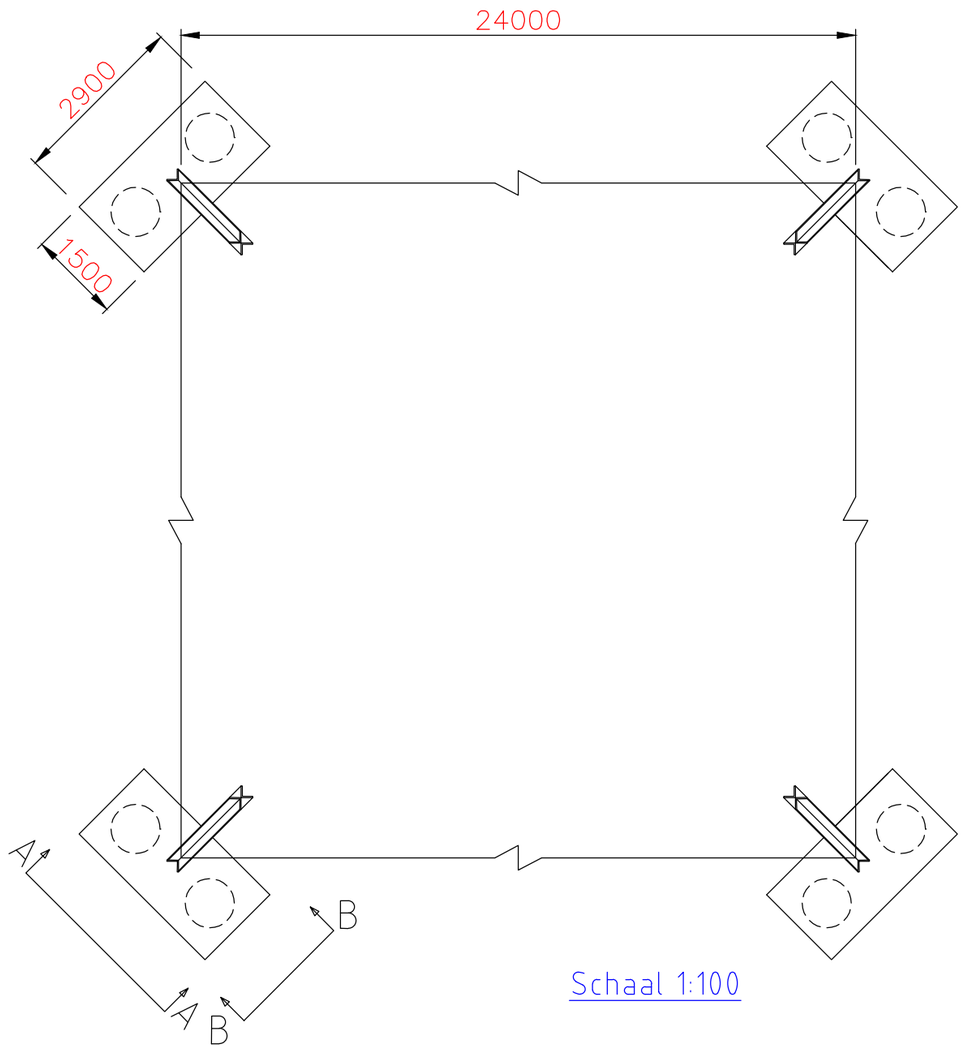

Schaal 1:100

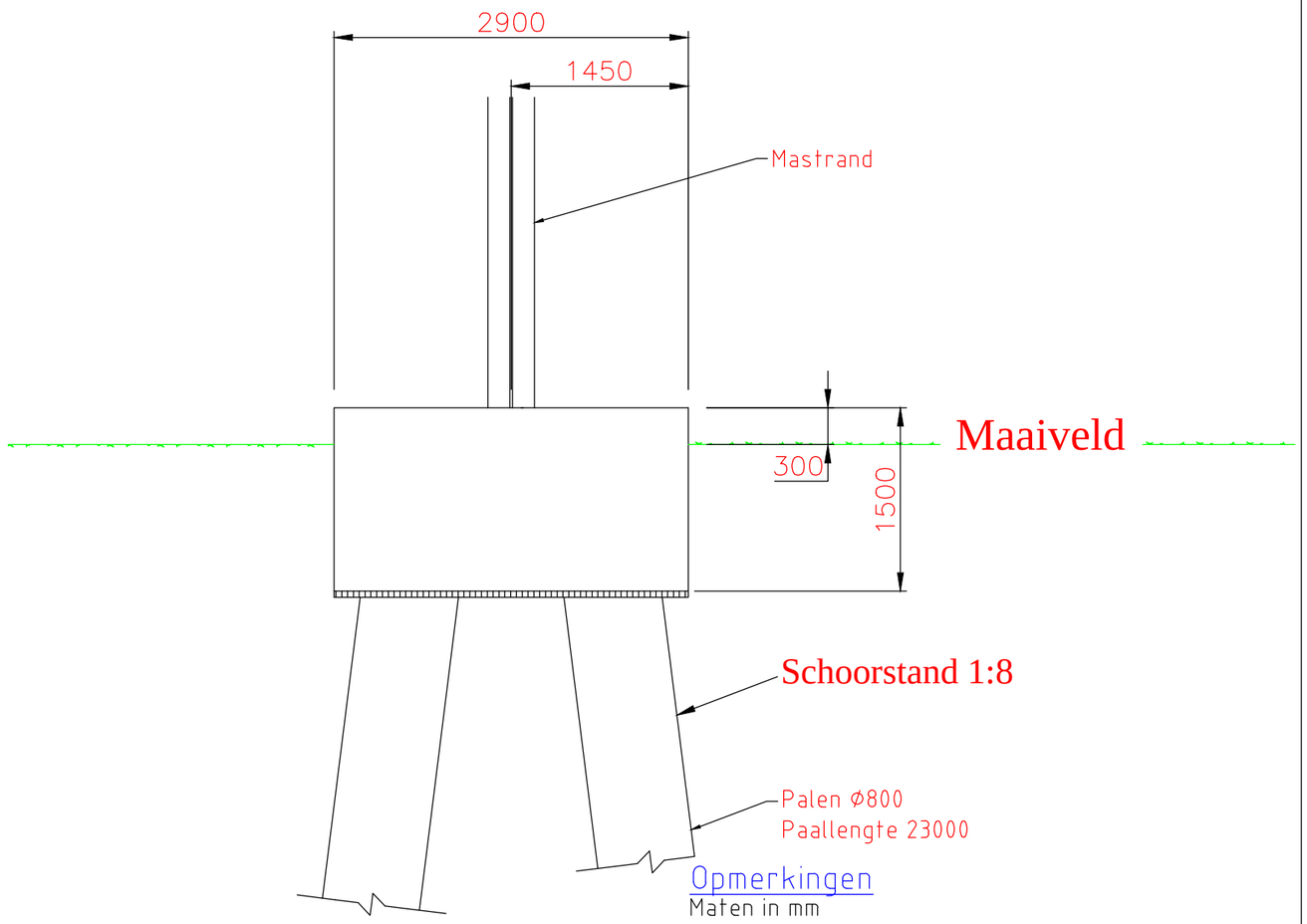

Aanzicht A-A

Schaal 1:50

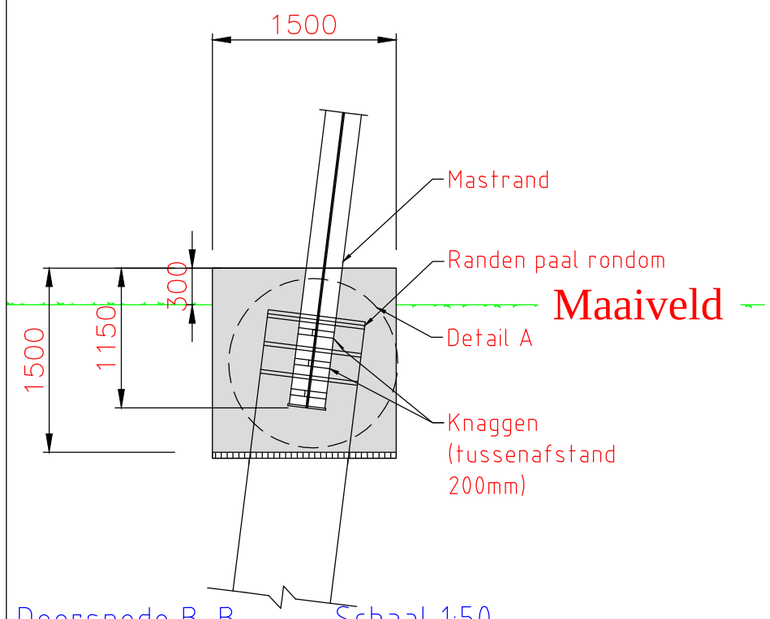

Doorsnede B-B Schaal 1:50

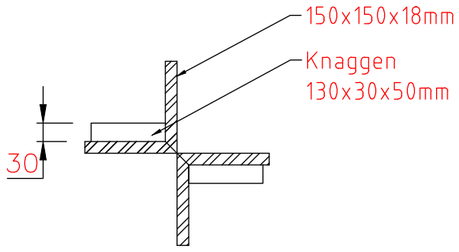

Detail A Schaal 1:10

Opmerkingen

Maten in mm
Hoogtematen in mm t.o.v. maaiveld
Coordinaten in mm, in het stelsel van de rijksdriehoekmeting
Maatvoering in het 360 graden stelsel
Vellingkanten niet getekend
Ringleiding in bovenkant poer op het bovennet plaatsen in de eerste laag
Caldweldplaten toepassen tbv aarding
Ontwerp fundatie conform SPE.05.344 Algemene Specificatie ontwerp axiaal belaste paalfunderingen

Verklaring

Gewapend beton
Werkvloer

Opmerking: Afmetingen indicatief

T.B.V. Aanvraag

2.0	24-02-2014	Diverse aanpassingen
1.0	19-12-2013	Eerste versie

KEMA DNV

Projectname: Engineering verbinding ZW380

Third angle projection:

Drawing no.: 74102194-032-670

Design state: DEFINITIEF		Scale:	1:10 / 1:50 / 1:100
Drawn by: BJT	19-12-2013	Units:	mm
Checked by: AJP	19-12-2013	Project no:	000.145
Approved by: AW	19-12-2013	Company:	TenneT

Description: Principe ontwerp fundatie ZBK

Revision: 2.0

Format: A3

DNV KEMA Energy & Sustainability, Utrechtseweg 310, 6812 AR Arnhem, tel: +31 26 3 56 91 11, www.dnvkema.com

© 2013 - Filename: 74102194-032-670 -Principe ontwerp fundatie ZBK mast Rev2.0.dwg

ZWV4S400+33

Loadcases for tower strength (ultimate limit state)

		Ahead			Back		
Loadcase according to 50341-3-15	Att. Point	Vertical [N]	Transversal [N]	Longitudinal [N]	Vertical [N]	Transversal [N]	Longitudinal [N]
NL1/1a	GW / opgw 1/2	2235	0	20055	3543	0	-20055
Wind, 10°C	150C1/2F1	8245	0	73723	13969	0	-73723
Permanent loads yg= 1.2	150C1/2F2	8245	0	73723	13763	0	-73723
Wind angle: 0°	150C1/2F3	8245	0	73723	13558	0	-73723
	380C2/4F1	16490	0	147446	27937	0	-147446
	380C2/4F2	16490	0	147446	27527	0	-147446
	380C2/4F3	16490	0	147446	27116	0	-147446
	RTG 1/2	4476	0	40154	6851	0	-40154
NL1/1b	GW / opgw 1/2	2234	0	22789	3708	0	-22789
Wind, -20°C	150C1/2F1	8241	0	85855	14849	0	-85855
Permanent loads yg= 1.2	150C1/2F2	8241	0	85855	14611	0	-85855
Wind angle: 0°	150C1/2F3	8241	0	85855	14372	0	-85855
	380C2/4F1	16481	0	171710	29698	0	-171710
	380C2/4F2	16481	0	171710	29221	0	-171710
	380C2/4F3	16481	0	171710	28744	0	-171710
	RTG 1/2	4474	0	46045	7172	0	-46045
NL1/3	GW / opgw 1/2	9040	0	60282	13068	0	-60282
Wind, -5°C	150C1/2F1	14210	0	118491	23450	0	-118491
Permanent loads yg= 1.2	150C1/2F2	14210	0	118491	23119	0	-118491
Wind angle: 0°	150C1/2F3	14210	0	118491	22789	0	-118491
	380C2/4F1	28420	0	236981	46900	0	-236981
	380C2/4F2	28420	0	236981	46239	0	-236981
	380C2/4F3	28420	0	236981	45578	0	-236981
	RTG 1/2	18056	0	120420	25366	0	-120420
NL1/4	GW / opgw 1/2	2987	0	25721	3567	0	-20456
Construction/maintenance, +5°C	150C1/2F1	9749	0	85893	14095	0	-75470
Permanent loads yg= 1.2	150C1/2F2	9749	0	85893	13885	0	-75470
Wind angle: 0°	150C1/2F3	9749	0	85893	13675	0	-75470
	380C2/4F1	19498	0	171786	28190	0	-150939
	380C2/4F2	19498	0	171786	27770	0	-150939
	380C2/4F3	19498	0	171786	27350	0	-150939
	RTG 1/2	5980	0	51516	6898	0	-41011
NL1/6	GW / opgw 1/2	2514	0	22048	3955	0	-22048
Permanent, +10°C	150C1/2F1	9277	0	80870	15565	0	-80870
Permanent loads yg= 1.35	150C1/2F2	9277	0	80870	15340	0	-80870
	150C1/2F3	9277	0	80870	15114	0	-80870
	380C2/4F1	18553	0	161740	31130	0	-161740
	380C2/4F2	18553	0	161740	30679	0	-161740
	380C2/4F3	18553	0	161740	30229	0	-161740
	RTG 1/2	5036	0	44135	7651	0	-44135
NL1/1a	GW / opgw 1/2	2236	3229	31310	2959	3196	-30620
Wind, 10°C	150C1/2F1	8249	9438	102044	11925	9217	-99630
Permanent loads yg= 1.2	150C1/2F2	8248	9051	100241	11903	8769	-97643
Wind angle: 45°	150C1/2F3	8248	8617	98244	11896	8242	-95352
	380C2/4F1	16497	18876	204088	23850	18434	-199260
	380C2/4F2	16497	18102	200482	23806	17537	-195285
	380C2/4F3	16496	17234	196488	23791	16484	-190705
	RTG 1/2	4478	5298	56808	6024	5011	-54647
NL1/1b	GW / opgw 1/2	2234	645	23475	3644	639	-23420
Wind, -20°C	150C1/2F1	8241	1886	87409	14665	1842	-87246
Permanent loads yg= 1.2	150C1/2F2	8241	1809	87287	14449	1752	-87116
Wind angle: 45°	150C1/2F3	8241	1722	87155	14235	1647	-86971
	380C2/4F1	16481	3772	174819	29329	3683	-174492
	380C2/4F2	16481	3617	174573	28899	3504	-174231
	380C2/4F3	16481	3444	174309	28469	3294	-173941
	RTG 1/2	4474	1059	46975	7099	1001	-46826
NL1/3	GW / opgw 1/2	9041	3310	63059	12803	3276	-62838
Wind, -5°C	150C1/2F1	14211	5272	124175	22829	5148	-123590
Permanent loads yg= 1.2	150C1/2F2	14211	5056	123736	22574	4898	-123122
Wind angle: 45°	150C1/2F3	14211	4813	123262	22322	4604	-122599
	380C2/4F1	28422	10543	248350	45659	10297	-247180
	380C2/4F2	28422	10111	247472	45149	9796	-246245
	380C2/4F3	28422	9627	246525	44644	9208	-245199
	RTG 1/2	18057	5446	124224	25060	5153	-123622
NL1/4	GW / opgw 1/2	2987	646	26184	3513	639	-21067
Construction/maintenance, +5°C	150C1/2F1	9749	1887	87114	13942	1842	-76821
Permanent loads yg= 1.2	150C1/2F2	9749	1810	87017	13751	1753	-76695
Wind angle: 45°	150C1/2F3	9749	1723	86913	13561	1648	-76554
	380C2/4F1	19498	3774	174227	27884	3685	-153642
	380C2/4F2	19498	3619	174034	27502	3506	-153389
	380C2/4F3	19498	3446	173825	27122	3295	-153107
	RTG 1/2	5980	1059	52139	6836	1002	-41766

NL1/1a	GW / opgw 1/2	2238	6464	47683	2645	6398	-46336
Wind, 10°C	150C1/2F1	8254	18889	148330	10410	18447	-143242
Permanent loads yg= 1.2	150C1/2F2	8254	18114	144540	10432	17549	-138968
Wind angle: 90°	150C1/2F3	8253	17245	140270	10472	16495	-133932
	380C2/4F1	16509	37777	296660	20820	36894	-286484
	380C2/4F2	16508	36228	289079	20863	35098	-277935
	380C2/4F3	16507	34490	280540	20943	32989	-267865
	RTG 1/2	4481	10603	83673	5406	10029	-79131
NL1/1b	GW / opgw 1/2	2234	1291	25347	3492	1277	-25153
Wind, -20°C	150C1/2F1	8241	3772	91784	14184	3683	-91185
Permanent loads yg= 1.2	150C1/2F2	8241	3617	91335	14024	3504	-90704
Wind angle: 90°	150C1/2F3	8241	3444	90848	13867	3294	-90165
	380C2/4F1	16483	7544	183568	28368	7367	-182369
	380C2/4F2	16482	7235	182669	28048	7009	-181408
	380C2/4F3	16482	6888	181697	27734	6588	-180329
	RTG 1/2	4474	2117	49582	6910	2003	-49040
NL1/3	GW / opgw 1/2	9045	6621	70265	12233	6554	-69537
Wind, -5°C	150C1/2F1	14214	10546	138882	21488	10299	-136960
Permanent loads yg= 1.2	150C1/2F2	14214	10113	137444	21365	9798	-135399
Wind angle: 90°	150C1/2F3	14214	9629	135869	21254	9210	-133627
	380C2/4F1	28429	21091	277765	42977	20598	-273920
	380C2/4F2	28428	20227	274887	42730	19596	-270798
	380C2/4F3	28427	19257	271739	42508	18420	-267253
	RTG 1/2	18062	10896	134506	24323	10308	-132408
NL1/4	GW / opgw 1/2	2987	1291	27496	3381	1278	-22747
Construction/maintenance, +5°C	150C1/2F1	9749	3774	90612	13541	3685	-80654
Permanent loads yg= 1.2	150C1/2F2	9749	3619	90248	13396	3506	-80186
Wind angle: 90°	150C1/2F3	9749	3446	89856	13254	3296	-79661
	380C2/4F1	19499	7548	181223	27082	7370	-161308
	380C2/4F2	19499	7239	180497	26793	7012	-160372
	380C2/4F3	19499	6892	179712	26509	6591	-159321
	RTG 1/2	5981	2119	53938	6675	2004	-43909
NL1/1a	GW / opgw 1/2	2236	3229	31310	2959	3196	-30620
Wind, 10°C	150C1/2F1	8249	9438	102044	11925	9217	-99630
Permanent loads yg= 1.2	150C1/2F2	8248	9051	100241	11903	8769	-97643
Wind angle: -45°	150C1/2F3	8248	8617	98244	11896	8242	-95352
	380C2/4F1	16497	18876	204088	23850	18434	-199260
	380C2/4F2	16497	18102	200482	23806	17537	-195285
	380C2/4F3	16496	17234	196488	23791	16484	-190705
	RTG 1/2	4478	5298	56808	6024	5011	-54647
NL1/1b	GW / opgw 1/2	2234	645	23475	3644	639	-23420
Wind, -20°C	150C1/2F1	8241	1886	87409	14665	1842	-87246
Permanent loads yg= 1.2	150C1/2F2	8241	1809	87287	14449	1752	-87116
Wind angle: -45°	150C1/2F3	8241	1722	87155	14235	1647	-86971
	380C2/4F1	16481	3772	174819	29329	3683	-174492
	380C2/4F2	16481	3617	174573	28899	3504	-174231
	380C2/4F3	16481	3444	174309	28469	3294	-173941
	RTG 1/2	4474	1059	46975	7099	1001	-46826
NL1/3	GW / opgw 1/2	9041	3310	63059	12803	3276	-62838
Wind, -5°C	150C1/2F1	14211	5272	124175	22829	5148	-123590
Permanent loads yg= 1.2	150C1/2F2	14211	5056	123736	22574	4898	-123122
Wind angle: -45°	150C1/2F3	14211	4813	123262	22322	4604	-122599
	380C2/4F1	28422	10543	248350	45659	10297	-247180
	380C2/4F2	28422	10111	247472	45149	9796	-246245
	380C2/4F3	28422	9627	246525	44644	9208	-245199
	RTG 1/2	18057	5446	124224	25060	5153	-123622
NL1/4	GW / opgw 1/2	2987	646	26184	3513	639	-21067
Construction/maintenance, +5°C	150C1/2F1	9749	1887	87114	13942	1842	-76821
Permanent loads yg= 1.2	150C1/2F2	9749	1810	87017	13751	1753	-76695
Wind angle: -45°	150C1/2F3	9749	1723	86913	13561	1648	-76554
	380C2/4F1	19498	3774	174227	27884	3685	-153642
	380C2/4F2	19498	3619	174034	27502	3506	-153389
	380C2/4F3	19498	3446	173825	27122	3295	-153107
	RTG 1/2	5980	1059	52139	6836	1002	-41766
NL1//1a	GW / opgw 1/2	1676	0	15849	2706	0	-15849
Wind, 10°C	150C1/2F1	6182	0	58598	10716	0	-58598
Permanent loads yg= 0.9	150C1/2F2	6182	0	58598	10553	0	-58598
Wind angle: 0°	150C1/2F3	6182	0	58598	10390	0	-58598
	380C2/4F1	12365	0	117195	21432	0	-117195
	380C2/4F2	12365	0	117195	21106	0	-117195
	380C2/4F3	12365	0	117195	20780	0	-117195
	RTG 1/2	3356	0	31751	5227	0	-31751

NL1/1b	GW / opgw 1/2	1675	0	18374	2858	0	-18374
Wind, -20°C	150C1/2F1	6179	0	70059	11549	0	-70059
Permanent loads yg= 0.9	150C1/2F2	6179	0	70059	11355	0	-70059
Wind angle: 0°	150C1/2F3	6179	0	70059	11160	0	-70059
	380C2/4F1	12358	0	140117	23099	0	-140117
	380C2/4F2	12358	0	140117	22710	0	-140117
	380C2/4F3	12358	0	140117	22321	0	-140117
	RTG 1/2	3355	0	37211	5525	0	-37211
NL1/3	GW / opgw 1/2	8480	0	57578	12320	0	-57578
Wind, -5°C	150C1/2F1	12146	0	105661	20363	0	-105661
Permanent loads yg= 0.9	150C1/2F2	12146	0	105661	20068	0	-105661
Wind angle: 0°	150C1/2F3	12146	0	105661	19774	0	-105661
	380C2/4F1	24291	0	211322	40725	0	-211322
	380C2/4F2	24291	0	211322	40136	0	-211322
	380C2/4F3	24291	0	211322	39548	0	-211322
	RTG 1/2	16933	0	115018	23902	0	-115018
NL1/4	GW / opgw 1/2	2428	0	21850	2728	0	-16211
Construction/maintenance, +5°C	150C1/2F1	7686	0	71458	10832	0	-60201
Permanent loads yg= 0.9	150C1/2F2	7686	0	71458	10665	0	-60201
Wind angle: 0°	150C1/2F3	7686	0	71458	10498	0	-60201
	380C2/4F1	15371	0	142916	21665	0	-120402
	380C2/4F2	15371	0	142916	21330	0	-120402
	380C2/4F3	15371	0	142916	20995	0	-120402
	RTG 1/2	4860	0	43781	5269	0	-32526
NL1/6	GW / opgw 1/2	1676	0	15849	2706	0	-15849
Permanent, +10°C	150C1/2F1	6182	0	58598	10716	0	-58598
Permanent loads yg= 0.9	150C1/2F2	6182	0	58598	10553	0	-58598
	150C1/2F3	6182	0	58598	10390	0	-58598
	380C2/4F1	12365	0	117195	21432	0	-117195
	380C2/4F2	12365	0	117195	21106	0	-117195
	380C2/4F3	12365	0	117195	20780	0	-117195
	RTG 1/2	3356	0	31751	5227	0	-31751
NL1/1a	GW / opgw 1/2	1677	3229	29507	2136	3196	-28742
Wind, 10°C	150C1/2F1	6186	9437	94135	8590	9216	-91354
Permanent loads yg= 0.9	150C1/2F2	6185	9050	92061	8594	8767	-89043
Wind angle: 45°	150C1/2F3	6185	8616	89745	8612	8241	-86353
	380C2/4F1	12371	18873	188271	17181	18432	-182708
	380C2/4F2	12371	18100	184121	17188	17535	-178086
	380C2/4F3	12371	17232	179490	17223	16482	-172707
	RTG 1/2	3358	5297	52507	4371	5011	-50028
NL1/1b	GW / opgw 1/2	1675	645	19357	2772	638	-19279
Wind, -20°C	150C1/2F1	6179	1885	72307	11290	1841	-72073
Permanent loads yg= 0.9	150C1/2F2	6179	1808	72132	11128	1752	-71886
Wind angle: 45°	150C1/2F3	6179	1721	71942	10966	1647	-71678
	380C2/4F1	12358	3771	144615	22581	3682	-144146
	380C2/4F2	12358	3616	144263	22256	3503	-143773
	380C2/4F3	12358	3443	143885	21933	3293	-143356
	RTG 1/2	3355	1058	38551	5424	1001	-38339
NL1/3	GW / opgw 1/2	8481	3309	60584	12037	3276	-60346
Wind, -5°C	150C1/2F1	12147	5271	112550	19633	5147	-111850
Permanent loads yg= 0.9	150C1/2F2	12147	5055	112025	19426	4897	-111289
Wind angle: 45°	150C1/2F3	12147	4813	111457	19221	4603	-110660
	380C2/4F1	24294	10541	225100	39266	10295	-223700
	380C2/4F2	24294	10110	224050	38851	9794	-222578
	380C2/4F3	24293	9625	222914	38443	9207	-221320
	RTG 1/2	16934	5446	119144	23573	5152	-118493
NL1/4	GW / opgw 1/2	2428	646	22450	2655	639	-17077
Construction/maintenance, +5°C	150C1/2F1	7686	1887	73108	10624	1842	-62138
Permanent loads yg= 0.9	150C1/2F2	7686	1809	72978	10482	1752	-61959
Wind angle: 45°	150C1/2F3	7686	1723	72838	10341	1647	-61758
	380C2/4F1	15372	3773	146216	21248	3684	-124277
	380C2/4F2	15372	3618	145956	20964	3505	-123918
	380C2/4F3	15372	3445	145676	20683	3295	-123517
	RTG 1/2	4860	1059	44592	5186	1002	-33604
NL1/1a	GW / opgw 1/2	1678	6464	46837	1928	6397	-45446
Wind, 10°C	150C1/2F1	6190	18888	144380	7512	18446	-139030
Permanent loads yg= 0.9	150C1/2F2	6190	18113	140397	7530	17548	-134514
Wind angle: 90°	150C1/2F3	6190	17244	135892	7560	16493	-129165
	380C2/4F1	12381	37775	288759	15025	36891	-278059
	380C2/4F2	12380	36226	280793	15060	35095	-269027
	380C2/4F3	12379	34488	271784	15120	32987	-258330
	RTG 1/2	3361	10602	81538	3932	10029	-76771

NL1/1b	GW / opgw 1/2	1675	1290	21879	2591	1277	-21626
Wind, -20°C	150C1/2F1	6180	3771	78371	10677	3683	-77560
Permanent loads yg= 0.9	150C1/2F2	6180	3617	77764	10580	3504	-76906
Wind angle: 90°	150C1/2F3	6180	3443	77103	10487	3293	-76167
	380C2/4F1	12359	7542	156741	21354	7365	-155120
	380C2/4F2	12359	7233	155527	21160	7007	-153812
	380C2/4F3	12359	6886	154205	20975	6587	-152334
	RTG 1/2	3355	2117	42145	5185	2002	-41415
NL1/3	GW / opgw 1/2	8484	6621	68261	11448	6554	-67492
Wind, -5°C	150C1/2F1	12150	10544	129643	18197	10298	-127456
Permanent loads yg= 0.9	150C1/2F2	12150	10112	128007	18119	9797	-125671
Wind angle: 90°	150C1/2F3	12149	9627	126210	18056	9208	-123634
	380C2/4F1	24300	21088	259286	36393	20595	-254911
	380C2/4F2	24300	20224	256014	36238	19593	-251342
	380C2/4F3	24299	19254	252419	36112	18417	-247268
	RTG 1/2	16939	10894	130159	22800	10306	-127926
NL1/4	GW / opgw 1/2	2428	1291	24109	2502	1278	-19334
Construction/maintenance, +5°C	150C1/2F1	7686	3773	77720	10126	3684	-67431
Permanent loads yg= 0.9	150C1/2F2	7686	3619	77248	10037	3505	-66799
Wind angle: 90°	150C1/2F3	7686	3445	76737	9953	3295	-66085
	380C2/4F1	15373	7547	155440	20251	7369	-134863
	380C2/4F2	15373	7237	154497	20075	7010	-133598
	380C2/4F3	15373	6891	153475	19906	6590	-132171
	RTG 1/2	4860	2118	46889	4987	2003	-36551
NL1/1a	GW / opgw 1/2	1677	3229	29507	2136	3196	-28742
Wind, 10°C	150C1/2F1	6186	9437	94135	8590	9216	-91354
Permanent loads yg= 0.9	150C1/2F2	6185	9050	92061	8594	8767	-89043
Wind angle: -45°	150C1/2F3	6185	8616	89745	8612	8241	-86353
	380C2/4F1	12371	18873	188271	17181	18432	-182708
	380C2/4F2	12371	18100	184121	17188	17535	-178086
	380C2/4F3	12371	17232	179490	17223	16482	-172707
	RTG 1/2	3358	5297	52507	4371	5011	-50028
NL1/1b	GW / opgw 1/2	1675	645	19357	2772	638	-19279
Wind, -20°C	150C1/2F1	6179	1885	72307	11290	1841	-72073
Permanent loads yg= 0.9	150C1/2F2	6179	1808	72132	11128	1752	-71886
Wind angle: -45°	150C1/2F3	6179	1721	71942	10966	1647	-71678
	380C2/4F1	12358	3771	144615	22581	3682	-144146
	380C2/4F2	12358	3616	144263	22256	3503	-143773
	380C2/4F3	12358	3443	143885	21933	3293	-143356
	RTG 1/2	3355	1058	38551	5424	1001	-38339
NL1/3	GW / opgw 1/2	8481	3309	60584	12037	3276	-60346
Wind, -5°C	150C1/2F1	12147	5271	112550	19633	5147	-111850
Permanent loads yg= 0.9	150C1/2F2	12147	5055	112025	19426	4897	-111289
Wind angle: -45°	150C1/2F3	12147	4813	111457	19221	4603	-110660
	380C2/4F1	24294	10541	225100	39266	10295	-223700
	380C2/4F2	24294	10110	224050	38851	9794	-222578
	380C2/4F3	24293	9625	222914	38443	9207	-221320
	RTG 1/2	16934	5446	119144	23573	5152	-118493
NL1/4	GW / opgw 1/2	2428	646	22450	2655	639	-17077
Construction/maintenance, +5°C	150C1/2F1	7686	1887	73108	10624	1842	-62138
Permanent loads yg= 0.9	150C1/2F2	7686	1809	72978	10482	1752	-61959
Wind angle: -45°	150C1/2F3	7686	1723	72838	10341	1647	-61758
	380C2/4F1	15372	3773	146216	21248	3684	-124277
	380C2/4F2	15372	3618	145956	20964	3505	-123918
	380C2/4F3	15372	3445	145676	20683	3295	-123517
	RTG 1/2	4860	1059	44592	5186	1002	-33604

ZWV4S400+33

Loadcases for tower strength (serviceability limit state)

		Ahead			Back		
Loadcase according to 50341-3-15	Att. Point	Vertical [N]	Transversal [N]	Longitudinal [N]	Vertical [N]	Transversal [N]	Longitudinal [N]
NL4/1a	GW / opgw 1/2	1862	0	17287	2987	0	-17287
Wind, 10°C	150C1/2F1	6870	0	63778	11810	0	-63778
Permanent loads yg= 1.0	150C1/2F2	6870	0	63778	11633	0	-63778
Wind angle: 0°	150C1/2F3	6870	0	63778	11455	0	-63778
	380C2/4F1	13740	0	127555	23620	0	-127555
	380C2/4F2	13740	0	127555	23265	0	-127555
	380C2/4F3	13740	0	127555	22910	0	-127555
	RTG 1/2	3730	0	34624	5773	0	-34624
NL4/1b	GW / opgw 1/2	1861	0	19890	3144	0	-19890
Wind, -20°C	150C1/2F1	6866	0	75493	12661	0	-75493
Permanent loads yg= 1.0	150C1/2F2	6866	0	75493	12452	0	-75493
Wind angle: 0°	150C1/2F3	6866	0	75493	12242	0	-75493
	380C2/4F1	13732	0	150986	25323	0	-150986
	380C2/4F2	13732	0	150986	24904	0	-150986
	380C2/4F3	13732	0	150986	24484	0	-150986
	RTG 1/2	3728	0	40247	6079	0	-40247
NL4/3	GW / opgw 1/2	6396	0	46963	9506	0	-46963
Wind, -5°C	150C1/2F1	10844	0	97212	18390	0	-97212
Permanent loads yg= 1.0	150C1/2F2	10844	0	97212	18120	0	-97212
Wind angle: 0°	150C1/2F3	10844	0	97212	17849	0	-97212
	380C2/4F1	21689	0	194424	36781	0	-194424
	380C2/4F2	21689	0	194424	36239	0	-194424
	380C2/4F3	21689	0	194424	35698	0	-194424
	RTG 1/2	12776	0	93900	18423	0	-93900
NL4/4	GW / opgw 1/2	2363	0	21389	3010	0	-17664
Construction/maintenance, +5°C	150C1/2F1	7872	0	72804	11930	0	-65435
Permanent loads yg= 1.0	150C1/2F2	7872	0	72804	11748	0	-65435
Wind angle: 0°	150C1/2F3	7872	0	72804	11566	0	-65435
	380C2/4F1	15744	0	145609	23861	0	-130869
	380C2/4F2	15744	0	145609	23497	0	-130869
	380C2/4F3	15744	0	145609	23133	0	-130869
	RTG 1/2	4732	0	42865	5816	0	-35430
NL4/1a	GW / opgw 1/2	1863	2152	24336	2586	2130	-23872
Wind, 10°C	150C1/2F1	6872	6290	81136	10466	6143	-79565
Permanent loads yg= 1.0	150C1/2F2	6872	6032	79961	10421	5844	-78283
Wind angle: 45°	150C1/2F3	6871	5743	78670	10386	5493	-76817
	380C2/4F1	13743	12580	162271	20932	12285	-159131
	380C2/4F2	13743	12064	159923	20843	11688	-156565
	380C2/4F3	13743	11486	157340	20771	10986	-153634
	RTG 1/2	3731	3531	44836	5231	3340	-43431
NL4/1b	GW / opgw 1/2	1861	430	20282	3108	426	-20250
Wind, -20°C	150C1/2F1	6866	1257	76378	12557	1228	-76285
Permanent loads yg= 1.0	150C1/2F2	6866	1205	76308	12360	1168	-76210
Wind angle: 45°	150C1/2F3	6866	1148	76233	12164	1098	-76127
	380C2/4F1	13732	2514	152757	25113	2455	-152569
	380C2/4F2	13732	2411	152616	24720	2336	-152420
	380C2/4F3	13732	2295	152465	24329	2196	-152255
	RTG 1/2	3728	706	40776	6038	667	-40691
NL4/3	GW / opgw 1/2	6396	2205	48921	9323	2182	-48765
Wind, -5°C	150C1/2F1	10845	3513	100856	17997	3431	-100478
Permanent loads yg= 1.0	150C1/2F2	10845	3369	100572	17775	3264	-100176
Wind angle: 45°	150C1/2F3	10845	3208	100266	17554	3068	-99839
	380C2/4F1	21690	7026	201712	35994	6862	-200955
	380C2/4F2	21690	6739	201144	35549	6528	-200352
	380C2/4F3	21690	6416	200532	35108	6137	-199678
	RTG 1/2	12777	3628	96580	18212	3433	-96154
NL4/4	GW / opgw 1/2	2363	430	21668	2979	426	-18009
Construction/maintenance, +5°C	150C1/2F1	7872	1258	73523	11845	1228	-66199
Permanent loads yg= 1.0	150C1/2F2	7872	1206	73466	11674	1168	-66127
Wind angle: 45°	150C1/2F3	7872	1148	73404	11503	1098	-66047
	380C2/4F1	15744	2515	147046	23690	2456	-132398
	380C2/4F2	15744	2412	146932	23348	2337	-132254
	380C2/4F3	15744	2297	146809	23006	2197	-132094
	RTG 1/2	4732	706	43241	5782	668	-35856
NL4/1a	GW / opgw 1/2	1864	4307	35894	2292	4263	-34917
Wind, 10°C	150C1/2F1	6875	12586	113052	9138	12291	-109425
Permanent loads yg= 1.0	150C1/2F2	6875	12070	110348	9152	11693	-106394
Wind angle: 90°	150C1/2F3	6874	11491	107316	9181	10991	-102845
	380C2/4F1	13750	25172	226105	18277	24583	-218849
	380C2/4F2	13749	24140	220696	18304	23386	-212787
	380C2/4F3	13749	22982	214631	18363	21982	-205691
	RTG 1/2	3732	7065	63382	4693	6683	-60147

NL4/1b	GW / opgw 1/2	1861	860	21384	3015	851	-21267
Wind, -20°C	150C1/2F1	6866	2514	78926	12270	2455	-78572
Permanent loads yg= 1.0	150C1/2F2	6866	2411	78660	12108	2336	-78289
Wind angle: 90°	150C1/2F3	6866	2296	78374	11947	2196	-77974
	380C2/4F1	13733	5028	157851	24539	4910	-157144
	380C2/4F2	13733	4822	157321	24216	4671	-156579
	380C2/4F3	13733	4591	156748	23895	4391	-155947
	RTG 1/2	3728	1411	42293	5926	1335	-41974
NL4/3	GW / opgw 1/2	6398	4411	54076	8915	4366	-53551
Wind, -5°C	150C1/2F1	10847	7027	110576	17086	6863	-109284
Permanent loads yg= 1.0	150C1/2F2	10846	6739	109609	16959	6529	-108240
Wind angle: 90°	150C1/2F3	10846	6416	108554	16839	6137	-107059
	380C2/4F1	21693	14055	221151	34172	13726	-218568
	380C2/4F2	21693	13479	219217	33918	13058	-216480
	380C2/4F3	21693	12833	217108	33678	12275	-214118
	RTG 1/2	12779	7258	103900	17691	6866	-102398
NL4/4	GW / opgw 1/2	2363	861	22472	2900	852	-18988
Construction/maintenance, +5°C	150C1/2F1	7872	2515	75612	11611	2456	-68410
Permanent loads yg= 1.0	150C1/2F2	7872	2412	75393	11468	2337	-68136
Wind angle: 90°	150C1/2F3	7872	2297	75157	11326	2197	-67831
	380C2/4F1	15744	5031	151225	23221	4913	-136819
	380C2/4F2	15744	4825	150787	22935	4674	-136273
	380C2/4F3	15744	4594	150315	22652	4393	-135662
	RTG 1/2	4732	1412	44337	5688	1336	-37088
NL4/1a	GW / opgw 1/2	1863	2152	24336	2586	2130	-23872
Wind, 10°C	150C1/2F1	6872	6290	81136	10466	6143	-79565
Permanent loads yg= 1.0	150C1/2F2	6872	6032	79961	10421	5844	-78283
Wind angle: -45°	150C1/2F3	6871	5743	78670	10386	5493	-76817
	380C2/4F1	13743	12580	162271	20932	12285	-159131
	380C2/4F2	13743	12064	159923	20843	11688	-156565
	380C2/4F3	13743	11486	157340	20771	10986	-153634
	RTG 1/2	3731	3531	44836	5231	3340	-43431
NL4/1b	GW / opgw 1/2	1861	430	20282	3108	426	-20250
Wind, -20°C	150C1/2F1	6866	1257	76378	12557	1228	-76285
Permanent loads yg= 1.0	150C1/2F2	6866	1205	76308	12360	1168	-76210
Wind angle: -45°	150C1/2F3	6866	1148	76233	12164	1098	-76127
	380C2/4F1	13732	2514	152757	25113	2455	-152569
	380C2/4F2	13732	2411	152616	24720	2336	-152420
	380C2/4F3	13732	2295	152465	24329	2196	-152255
	RTG 1/2	3728	706	40776	6038	667	-40691
NL4/3	GW / opgw 1/2	6396	2205	48921	9323	2182	-48765
Wind, -5°C	150C1/2F1	10845	3513	100856	17997	3431	-100478
Permanent loads yg= 1.0	150C1/2F2	10845	3369	100572	17775	3264	-100176
Wind angle: -45°	150C1/2F3	10845	3208	100266	17554	3068	-99839
	380C2/4F1	21690	7026	201712	35994	6862	-200955
	380C2/4F2	21690	6739	201144	35549	6528	-200352
	380C2/4F3	21690	6416	200532	35108	6137	-199678
	RTG 1/2	12777	3628	96580	18212	3433	-96154
NL4/4	GW / opgw 1/2	2363	430	21668	2979	426	-18009
Construction/maintenance, +5°C	150C1/2F1	7872	1258	73523	11845	1228	-66199
Permanent loads yg= 1.0	150C1/2F2	7872	1206	73466	11674	1168	-66127
Wind angle: -45°	150C1/2F3	7872	1148	73404	11503	1098	-66047
	380C2/4F1	15744	2515	147046	23690	2456	-132398
	380C2/4F2	15744	2412	146932	23348	2337	-132254
	380C2/4F3	15744	2297	146809	23006	2197	-132094
	RTG 1/2	4732	706	43241	5782	668	-35856

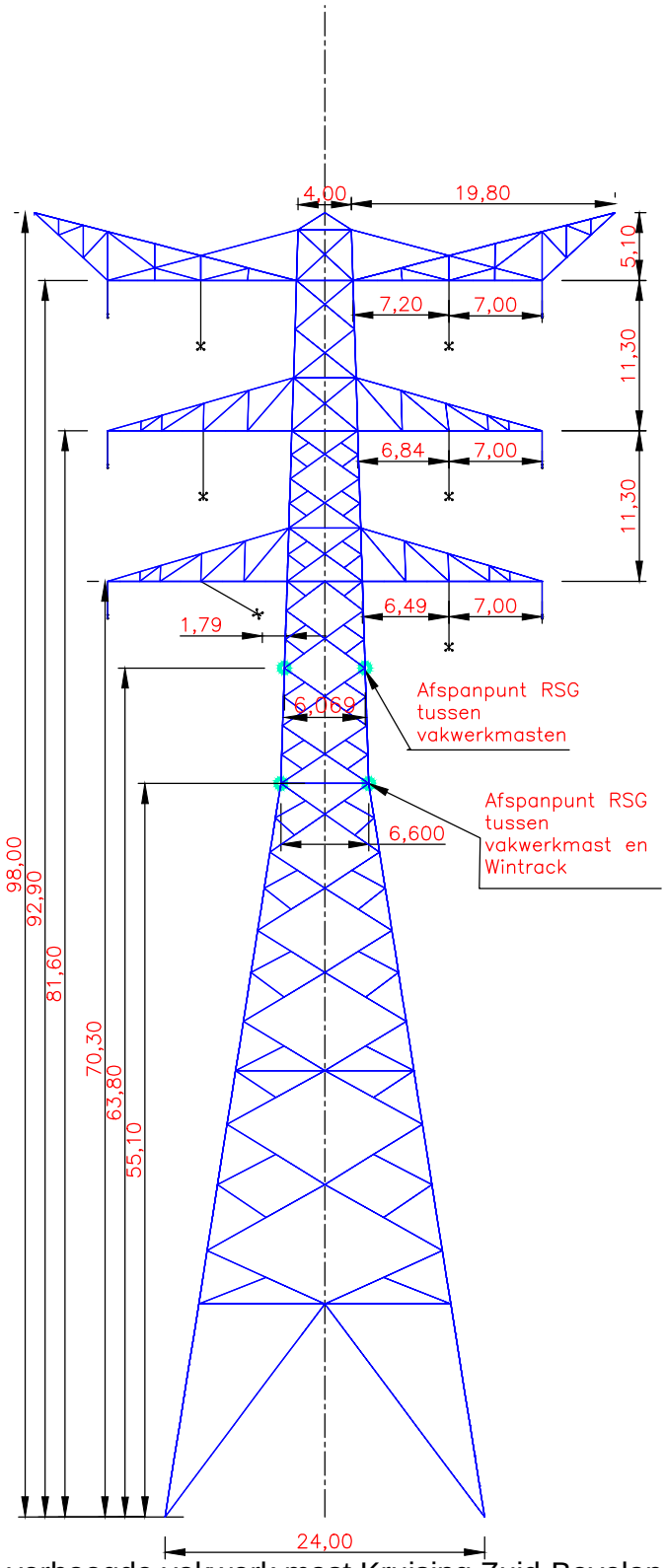

Basisontwerp mastbeeld verhoogde vakwerk mast Kruising Zuid-Bevelandkanaal

Rev 4.0	06-02-2014	Mastbeeld definitief

KEMA DNV

Projectname: ZW380 Engineering

Third angle projection:

Drawing no.: 74102194-35-901

Design state: Basisontwerp		Scale:	1:1
Drawn by: AJP	06-02-2014	Units:	m
Checked by: TvdW	06-02-2014	Project no:	74102194
Approved by: AW	06-02-2014	Company:	TenneT

Description: Mastbeeld ZWV4S400+33 verhoogde vakwerkmast Zuid-Bevelandkruising

Revision: 4.0

Format: A4

DNV KEMA Energy & Sustainability, Utrechtseweg 310, 6812 AR Arnhem, tel: +31 26 3 56 91 11, www.dnvkema.com

© 2012 - Filename: 74102194-035-900-901 mastbeeld verhoogde vakwerkmast Zuid-Bevelandkanaal Rev4.0.dwg

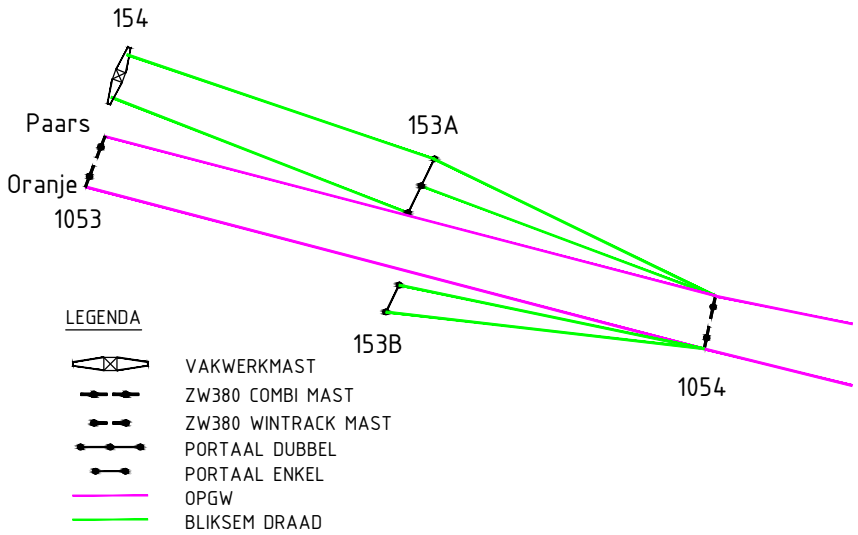

Projectname: Engineering verbinding ZW380			
Third angle projection:	Drawing no.: 74102194-031-305		
Design state: Concept	Scale: N.V.T.	Description: Verloop Bliksemdraden inlussing WAP150	Revision: 1.0
Drawn by: RBE 18-02-2014	Units: m		
Checked by: AJP 18-02-2014	Project no: 000.145		Format: A4
Approved by: AW 18-02-2014	Company: TenneT		

DNV KEMA Energy & Sustainability, Utrechtseweg 310, 6812 AR Arnhem, tel: +31 26 3 56 91 11, www.dnvkema.com

© 2014 - Filename: DNV KEMA 2012 zw.dwt

74102194-ETD/POL 13-2623 V4.0 Definitief

Engineering ZW380
Constructieberekening hybride masten ten behoeve van vergunningaanvraag

Arnhem, 6 maart 2014

Auteur(s) E.J. Platenkamp

In opdracht van TennneT TSO B.V. Projectnummer 000.145.11

auteur : EJ Platenkamp
34 blz. 10 bijl. EJP/JEH

beoordeeld : AJP van der Wekken
goedgekeurd : A. van der Wal

KEMA Nederland B.V. Utrechtseweg 310, 6812 AR Arnhem Postbus 9035, 6800 ET Arnhem Nederland
T +31 26 356 9111 F +31 26 442 8388 contact@dnvkema.com www.dnvkema.com Handelsregister Arnhem 09080262

Copyright © 2013, KEMA Nederland B.V., Arnhem, Nederland. Alle rechten voorbehouden.

Het is verboden om dit document op enige manier te wijzigen, het opsplitsen in delen daarbij inbegrepen. In geval van afwijkingen tussen een elektronische versie (bijv. een PDF bestand) en de originele door KEMA verstrekte papieren versie, prevaleert laatstgenoemde.

KEMA Nederland B.V. en/of de met haar gelieerde maatschappijen zijn niet aansprakelijk voor enige directe, indirecte, bijkomstige of gevolgschade ontstaan door of bij het gebruik van de informatie of gegevens uit dit document, of door de onmogelijkheid die informatie of gegevens te gebruiken.

De inhoud van dit rapport mag slechts als één geheel aan derden kenbaar worden gemaakt, voorzien van bovengenoemde aanduidingen met betrekking tot auteursrechten, aansprakelijkheid, aanpassingen en rechtsgeldigheid.

INHOUD

Pagina

1 Inleiding 4

2 Uitgangspunten 5
2.1 Gebruikte normen 5
2.2 Materiaal typeringen mast 5
2.3 Constructie typering 6
2.4 Uitgangspunten uit de beschouwde normen 6
2.5 Veldlengte 10

3 Mastafmetingen 10

4 Beschrijving constructie 18
4.1 Materiaalklassen 19

5 Conclusie Hybride masten 24

Bijlage A Berekening W2S400 25

Bijlage B Berekening W2HL400 26

Bijlage C Berekening W4S350 27

Bijlage D Berekening W4HL350 28

Bijlage E Berekening W4S400 29

Bijlage F Berekening W4HL400 30

Bijlage G Berekening W4S450 31

Bijlage H Berekening W4HK450 32

Bijlage I Berekening W6S400 33

Bijlage J Berekening W6HL400 34

1 INLEIDING

Dit document geeft een samenvatting van de ontwerpbelastingen en berekeningen van de volgende hybride masttypen, geschikt voor de bouwaanvraag:

- Steunmast geschikt voor twee-circuits, 2x 380 kV, 400 meter veldlengte; type W2S400;
- Hoekmast geschikt voor twee-circuits, 2x 380kV, 400 meter veldlengte, lijnhoek van 130 graden, type W2HL400;
- Steunmast geschikt voor vier-circuits, 2x 380 kV en 2x 150 kV, 350 meter veldlengte; type W4S350;
- Hoekmast geschikt voor vier-circuits, 2x 380 kV en 2x 150 kV, 350 meter veldlengte, lijnhoek van 130 graden, type W4HL350;
- Steunmast geschikt voor vier-circuits, 2x 380 kV en 2x 150 kV, 400 meter veldlengte; type W4S400;
- Hoekmast geschikt voor vier-circuits, 2x 380 kV en 2x 150 kV, 400 meter veldlengte, lijnhoek van 130 graden, type W4HL400;
- Steunmast geschikt voor vier-circuits, 2x 380 kV en 2x 150 kV, 450 meter veldlengte; type W4S450;
- Hoekmast geschikt voor vier-circuits, 2x 380 kV en 2x 150 kV, 450 meter veldlengte, lijnhoek van 150 graden, type W4HK450;
- Steunmast geschikt voor vier-circuits, 4x 380 kV, 400 meter veldlengte; type W6S400;
- Hoekmast geschikt voor vier-circuits, 4x 380kV, 400 meter veldlengte, lijnhoek van 130 graden, type W6HL400.

De ontwerpbelastingen voor de betonnen Wintrack masten zijn gebaseerd op de DNV KEMA vergunningsdocumenten voor de stalen varianten.

Voor alle masttypes zijn de ontwerpbelastingen bepaald. De belastingen zijn zo opgesteld dat deze niet locatie specifiek worden bepaald maar generiek met maximale veldlengte en maximale lijnhoek, tussen opeenvolgende masten. Het effect op de belastingen door verschil in hoogte van opeenvolgende masten wordt niet meegenomen.

De aanpak is gebaseerd op Bijlage IV B95-STA-KA-1300143 Berekening Wintrack hybride masten van 20 februari 2013 versie 0.3.

2 UITGANGSPUNTEN

De in dit document gepresenteerde belastingen zijn niet bepaald op basis van analyse van alle door NEN-EN 50341 voorgeschreven belastinggevallen maar door DNV KEMA zijn die belastinggevallen of combinaties daarvan geselecteerd die de maatgevende belastingen veroorzaken.

Voor steunmasten met een verhoging tot maximaal 10 meter geldt dat deze berekend worden voor een maximale lijnhoek van 2 x 2.5. Voor hoekmasten wordt er een onderscheid gemaakt in de maximaal toelaatbare hoek op de mast, kenbaar gemaakt met een codering in het masttype met K (150°), L (130°) en M (120°).

Overige uitgangspunten en aannames zijn:

- trekparameter bij 10 °C: 1800 m
- geleider 380 kV: 4 bundel AMS620
- geleider 150 kV: 2 bundel AMS620
- bliksemgeleider/OPGW: 1 bundel BRUGG OPGW 226-AL3/38-A20SA
- retour stroomgeleider: 2 bundel WDI AACSR 242-39 Hawk
- hoogte mast en ophangpunten conform de documenten: 12-00570 rapport “mastafmetingen 4x380 kv + 220-380 kV rev 3.0” en 12-00572 rapport “mastafmetingen 2x380+150-380 rev 3.0”
- belastingen zijn inclusief belastingfactoren volgens de NEN-EN 50341-3-15
- Maximum mastsegment gewicht van 35 ton

2.1 Gebruikte normen

- NEN - EN50341-1, “Bovengrondse elektrische lijnen boven 45 kV wisselspanning – Deel 1: Algemene eisen - Gemeenschappelijke specificaties
- NEN - EN50341-3-15, “Bovengrondse elektrische lijnen boven 45 kV wisselspanning - Deel 3: Verzameling van nationale normatieve aspecten”
- NEN-EN 1990:2002- "Eurocode - Grondslagen van het constructief ontwerp”
- NEN-EN 1991-1-1: Belastingen op constructies
- NEN-EN 1992-1-1: Ontwerp en berekening Betonconstructies
- NEN-EN 1994-1-1: Ontwerp en berekening van staal-betonconstructies

2.2 Materiaal typeringen mast

Staal:

- S355J2G3 bij wanddikten kleiner dan 15 mm (t < 15mm)
- S355K2G3 bij wanddikten groter dan 15 mm (t > 15mm).

Beton:

- Betonkwaliteit: C55/67 t/m C90/105
- Wapening B550B
- Nagerekt voorspanstaal kwaliteit FeP1860 uitgaande van 150 mm2 per streng
- Dekking 50 mm,
- Levensduur 50 jaar conform NEN-EN 50341
- Milieuklasse: XC4, XD3, eventueel XF2 afhankelijk van de locaties
- Materiaalfactor van 1,5 voor beton
- Materiaalfactor van 1,5 voor voorgerekt en nagerekt staal
- Materiaalfactor van 1,15 voor betonwapening

2.3 Constructie typering

Veiligheidsklasse	3	1)	$\gamma_{f;g}$ =	1.20	$\gamma_{f;q}$ =	1.50
		2)	$\gamma_{f;g}$ =	1.35		
Referentie periode	50 jaar					
Windtracé	II	onbebouwd				
Ijsgebied	B					

IJsgebied A voor bliksemdraad en OPGW	5√d
IJsgebied A voor retourstroom geleider	5√d
IJsgebied B voor fase geleider	1,8√d

2.4 Uitgangspunten uit de beschouwde normen

Berekening capaciteit stalen secties

Of de capaciteit van de stalen mast voldoende is voor de optredende belasting wordt als volgt geverifieerd (NEN-EN 50341-3-15, paragraaf 7.4.5.4):

Tabel 1 - Capaciteit conform NEN-EN 50341-3

Normaalkracht (N)			Buigend Moment (M)		
Voorwaarde:	d/t <90*ε2	90*ε2 <d/t<315*ε2	Voorwaarde:	d/t <157.5*ε2	157.5*ε2 <d/t<315*ε2
Reductiefactor ρA	1,0	0,3 + 63* ε2*t/d	Reductiefactor ρw	1,0	0,6 + 63* ε2*t/d

Met:

$$A_{eff} = \rho_A \times A$$

$$W_{eff} = \rho_W \times W$$

Aan het volgende criterium moet voldaan worden:

$$\frac{N}{A_{eff}} + \frac{M}{W_{eff}} = \frac{f_y}{\gamma_{M1}}$$

Met: γ_{M1} = 1,0

De factor ε voor staal S355 wordt als volgt bepaald:

$$\varepsilon = \left(\frac{235}{f_y}\right)^{0.5} \rightarrow 0.814$$

Berekening wanddikte masten:

$$W_{ben} = \frac{M_{tot}}{f_{y;d}}$$

Weerstandsmoment voor een cirkelvormige doorsnede is:

$$W = \tfrac{1}{4} \times \pi \times D^2 \times t$$

Bepaling binnendiameter d:

$$d = \sqrt[4]{D^4 - \left(\frac{32 \times W_{ben} \times D}{\pi}\right)}$$

Voor de wanddikte geldt dan:

$$t = \left(\frac{D-d}{2}\right)$$

Berekening capaciteit betonnen secties

Berekening van benodigde weerstandmoment en wanddikte tegen maximaal optredend moment:

$$W_{ben} = \frac{M_{tot}}{f_{cd}}$$

Waarin:

M_{tot} = Maximaal voetmoment uit de belastingen

f_{cd} = Rekenwaarde van tegenstaande betondruk spanning

$$f_{cd} = \frac{f_{ck}}{1.5}$$

f_{ck}= drukcapaciteit van beton

Weerstandsmoment voor een cirkelvormige doorsnede:

$$W = \frac{1}{32} \cdot D \times \pi \times (D^4 - d^4)$$

Bepaling binnendiameter d:

$$d = \sqrt[4]{D^4 - \left(\frac{32 \times W_{ben} \times D}{\pi}\right)}$$

Bepaling voorspankracht ankers

$P_{benodigd}$ = Benodigde voorspankracht

Aantal strengen is afhankelijk van de dwarsdoorsnede per streng en de maximaal toelaatbare spanning per streng (ook nog de materiaalfactor toevoegen in de formule).

$$P_{benodigd} = A_{streng} \cdot \sigma_{streng} \cdot n_{strengen}$$

Aantal ankers hangt van het aantal strengen per kabel af

$$n_{ankers} = \frac{n_{strengen}}{streng / kabel}$$

Bepaling benodigde dwarswapening

De weerstand V_{RD} tegen afschuiving wordt met onderstaande formule bepaald.

$$V_{RD,\max} = \frac{A_{SW}}{s} \cdot z \cdot f_{ywd} \cdot \cot\theta$$

Waarin:

A_{sw} = oppervlakte van de dwarsdoorsnede van de dwarskrachtwapening

s = hart op hartafstand van de beugels

f_{ywd}= rekenwaarde van de vloeigrens van de dwarskrachtwapening

z = Bij dwarskracht diameter van de ringwapening en bij afschuiving door torsie is de omtrek van de ringwapening.

Θ = Hoek tussen de drukdiagonaal van beton en de as van de ligger loodrecht op de dwarskrachtwapening

De torsieweerstand T_{RD} wordt met onderstaande formule bepaald.

Waarin:

v = 0.6 (sterkte reductiefactor)

α_{cw} = 2.5 $(1-\sigma_{cp}/f_{cd})$ factor waarmee met de spanning in de op druk belaste rand rekening is gehouden

f_{cd} = rekenwaarde van de drukspanning van beton

σ_{cp} = gemiddelde waarde betondrukspanning

A_k = Omsloten oppervlak inclusief de holle delen

t_{ef} = meewerkende wanddikte

Θ = (21.8 – 45 graden) hoek tussen de drukdiagonaal van beton en de as van de ligger loodrecht op de dwarskrachtwapening. De berekeningen zijn uitgevoerd bij een hoek van 30 graden.

De capaciteit van een op wringing en afschuiving belast element wordt met de onderstaande voorwaarde getoetst.

$$\frac{T_{ed}}{T_{RD,\max}} + \frac{V_{ed}}{V_{RD,\max}} \leq 1.0$$

T_{ed} = rekenwaarde van het aangrijpend wringend moment

V_{ed} = rekenwaarde van de aangrijpende dwarskracht

2.5 Bepaling maximale belasting op mastsegmenten

De belastingen op de mastsegmenten zijn gebaseerd op het buigmoment uit de geleiders, de wind en het eigengewicht van de mast. Dit is per segment bepaald. De krachten zijn gebaseerd op de NEN-EN-50341-3. Zie hiervoor de tabellen in hoofdstuk 3.

2.6 Veldlengte

De beschouwde masttypen zijn opgenomen in onderstaande tabel:

Tabel 2 – Masttypen

Mast type	Max. ahead span (m)	Max. back span (m)	Max. Lijn hoek (deg)	Mast type aangrenzende mast
W2S400	400	400	2 x 2.5	W2S400
W2HL400	400	400	2 x 25	W2S400
W4S350	350	350	2 x 2.5	W4S350
W4HL350	350	350	2 x 25	W4S350
W4S400	400	400	2 x 2.5	W4S400
W4HL400	400	400	2 x 25	W4S400
W4S450	450	450	2 x 2.5	W4S450
W4HK450	450	450	2 x 15	W4S450
W6S400	400	400	2 x 2.5	W6S400
W6HL400	400	400	2 x 25	W6S400

3 MASTAFMETINGEN

In de volgende tabellen zijn de afmetingen en de belangrijke parameters per hybride mast weergegeven. De resultaten van de berekening dienen als input voor het ontwerp van de fundering. De overgang van het betonnen deel naar het stalen deel zit net onder de retourstroomafspanning.

- Overgang bij W2S400 is op 23 meter vanaf mastvoet;
- Overgang bij W2HL400 is op 22 meter vanaf mastvoet;
- Overgang bij W4S350 is op 19 meter vanaf mastvoet.
- Overgang bij W4HL350 is op 19 meter vanaf mastvoet;
- Overgang bij W4S400 is op 22 meter vanaf mastvoet;
- Overgang bij W4HL400 is op 22 meter vanaf mastvoet.
- Overgang bij W4S450 is op 25 meter vanaf mastvoet;
- Overgang bij W4HK450 is op 25 meter vanaf mastvoet;
- Overgang bij W6S400 is op 23 meter vanaf mastvoet.
- Overgang bij WHL400 is op 23 meter vanaf mastvoet.

Tabel 3 - Afmetingen en belangrijke parameters van betonnen deel mast W2S400

	Segment	
	1	2
Betonklasse	C55/67	C55/67
Lengte (mm)	12000	11000
Voetdiameter (mm)	2200	1893
Topdiameter (mm)	1893	1612
Wanddikte (mm)	400	350
Massa (kN)	598	406
Segment voet moment (kNm)	14361	9661
Dwarskracht (kN)	366	344
Torsiemoment (kNm)	0	0

Tabel 4 - Afmetingen en belangrijke parameters van stalen deel mast W2S400

	Segment
Staalklasse	S355
Lengte (mm)	31800
Voetdiameter (mm)	1612
Topdiameter (mm)	800
Wanddikte (mm)	12
Massa (kN)	189
Segment voet moment (kNm)	6314

Tabel 5 - Afmetingen en belangrijke parameters van mast W2HL400

	Segment	
	1	2
Betonklasse	C70/85	C70/85
Lengte (mm)	12000	10000
Voetdiameter (mm)	2800	2420
Topdiameter (mm)	2420	2104
Wanddikte (mm)	500	450
Massa (kN)	955	622
Segment voet moment (kNm)	39217	26497
Dwarskracht (kN)	968	959
Torsiemoment (kNm)	15	15

Tabel 6 - Afmetingen en belangrijke parameters van stalen deel mast W2HL400

	Segment
Staalklasse	S355
Lengte (mm)	41200
Voetdiameter (mm)	2100
Topdiameter (mm)	800
Wanddikte (mm)	18
Massa (kN)	352
Segment voet moment (kNm)	16083

Tabel 7 - Afmetingen en belangrijke parameters van betonnen deel mast W4S350

	Segment	
	1	2
Betonklasse	C55/67	C55/67
Lengte (mm)	12000	7000
Voetdiameter (mm)	2200	1898
Topdiameter (mm)	1898	1722
Wanddikte (mm)	450	400
Massa (kN)	662	306
Segment voet moment (kNm)	17392	11481
Dwarskracht (kN)	452	429
Torsiemoment (kNm)	0	0

Tabel 8 - Afmetingen en belangrijke parameters van stalen deel mast W4S350

	Segment
Staalklasse	S355
Lengte (mm)	36600
Voetdiameter (mm)	1710
Topdiameter (mm)	800
Wanddikte (mm)	14
Massa (kN)	250
Segment voet moment (kNm)	9019

Tabel 9 - Afmetingen en belangrijke parameters van betonnen deel mast W4HL350

	Segment	
	1	2
Betonklasse	C70/85	C70/85
Lengte (mm)	12000	7000
Voetdiameter (mm)	3000	2524
Topdiameter (mm)	2524	2247
Wanddikte (mm)	500	450
Massa (kN)	1039	472
Segment voet moment (kNm)	50452	33517
Dwarskracht (kN)	1266	1257
Torsiemoment (kNm)	1740	1740

Tabel 10 - Afmetingen en belangrijke parameters van stalen deel mast W4HL350

	Segment
Staalklasse	S355
Lengte (mm)	36500
Voetdiameter (mm)	2230
Topdiameter (mm)	800
Wanddikte (mm)	22
Massa (kN)	324
Segment voet moment (kNm)	24085

Tabel 11 - Afmetingen en belangrijke parameters van betonnen deel mast W4S400

	Segment	
	1	2
Betonklasse	C55/67	C55/67
Lengte (mm)	12000	10000
Voetdiameter (mm)	2400	2097
Topdiameter (mm)	2097	1844
Wanddikte (mm)	500	450
Massa (kN)	793	523
Segment voet moment (kNm)	22868	16128
Dwarskracht (kN)	523	498
Torsiemoment (kNm)	0	0

Tabel 12 - Afmetingen en belangrijke parameters van stalen deel mast W4S400

	Segment
Staalklasse	S355
Lengte (mm)	41300
Voetdiameter (mm)	1840
Topdiameter (mm)	800
Wanddikte (mm)	16
Massa (kN)	362
Segment voet moment (kNm)	11768

Tabel 13 - Afmetingen en belangrijke parameters van betonnen deel mast W4HL400

	Segment	
	1	2
Betonklasse	C70/85	C70/85
Lengte (mm)	12000	10000
Voetdiameter (mm)	3200	2744
Topdiameter (mm)	2744	2365
Wanddikte (mm)	500	450
Massa (kN)	1118	842
Segment voet moment (kNm)	60347	42920
Dwarskracht (kN)	1325	1315
Torsiemoment (kNm)	1837	1837

Tabel 14 - Afmetingen en belangrijke parameters van stalen deel mast W4HL400

	Segment
Staalklasse	S355
Lengte (mm)	41200
Voetdiameter (mm)	2360
Topdiameter (mm)	800
Wanddikte (mm)	24
Massa (kN)	385
Segment voet moment (kNm)	28431

Tabel 15 - Afmetingen en belangrijke parameters van betonnen deel mast W4S450

	Segment		
	1	2	3
Betonklasse	C55/67	C55/67	C55/67
Lengte (mm)	12000	7000	6000
Voetdiameter (mm)	2800	2463	2266
Topdiameter (mm)	2463	2266	2098
Wanddikte (mm)	500	450	400
Massa (kN)	971	460	342
Segment voet moment (kNm)	29677	21824	17384
Dwarskracht (kN)	606	576	559
Torsiemoment (kNm)	0	0	0

Tabel 16 - Afmetingen en belangrijke parameters van stalen deel mast W4S450

	Segment
Staalklasse	S355
Lengte (mm)	46200
Voetdiameter (mm)	2100
Topdiameter (mm)	800
Wanddikte (mm)	16
Massa (kN)	332
Segment voet moment (kNm)	15232

Tabel 17 - Afmetingen en belangrijke parameters van betonnen deel mast W4HK450

	Segment		
	1	2	3
Betonklasse	C70/85	C70/85	C70/85
Lengte (mm)	12000	7000	6000
Voetdiameter (mm)	3300	2878	2632
Topdiameter (mm)	2878	2632	2421
Wanddikte (mm)	500	450	400
Massa (kN)	1178	553	408
Segment voet moment (kNm)	57412	42426	33820
Dwarskracht (kN)	1146	1111	1091
Torsiemoment (kNm)	1737	1737	1737

Tabel 18 - Afmetingen en belangrijke parameters van stalen deel mast W4HK450

	Segment
Staalklasse	S355
Lengte (mm)	46100
Voetdiameter (mm)	2425
Topdiameter (mm)	800
Wanddikte (mm)	22
Massa (kN)	369
Segment voet moment (kNm)	28255

Tabel 19 - Afmetingen en belangrijke parameters van betonnen deel mast W6S400

	Segment	
	1	2
Betonklasse	C55/67	C55/67
Lengte (mm)	12000	11000
Voetdiameter (mm)	2400	2079
Topdiameter (mm)	2079	1786
Wanddikte (mm)	500	450
Massa (kN)	821	591
Segment voet moment (kNm)	22718	15287
Dwarskracht (kN)	541	533
Torsiemoment (kNm)	0	0

Tabel 20 - Afmetingen en belangrijke parameters van stalen deel mast W6S400

	Segment
Staalklasse	S355
Lengte (mm)	36900
Voetdiameter (mm)	1776
Topdiameter (mm)	800
Wanddikte (mm)	15
Massa (kN)	277
Segment voet moment (kNm)	9251

Tabel 21 - Afmetingen en belangrijke parameters van betonnen mast W6HL400

	Segment	
	1	2
Betonklasse	C70/85	C70/85
Lengte (mm)	12000	11000
Voetdiameter (mm)	3500	2954
Topdiameter (mm)	2954	2453
Wanddikte (mm)	500	450
Massa (kN)	1275	812
Segment voet moment (kNm)	71341	48470
Dwarskracht (kN)	1676	1665
Torsiemoment (kNm)	3994	3994

Tabel 22 - Afmetingen en belangrijke parameters van stalen mast W6HL400

	Segment
Staalklasse	S355
Lengte (mm)	36300
Voetdiameter (mm)	2447
Topdiameter (mm)	800
Wanddikte (mm)	24
Massa (kN)	348
Segment voet moment (kNm)	29173

Een aantal afmetingen zijn t.o.v. de stalen mast uitvoeringen gewijzigd. Deze wijzigingen zijn doorgevoerd vanwege de anders te hoge betondruk in de wand. De masttop diameter zijn voor alle masten vergroot naar 0.8 meter omdat uit studies van architect Z&J blijkt dat bij een vergrote mastvoet diameter een grotere masttop diameter esthetisch passender is.

Het is mogelijk is om de voetdiameter nog meer te vergroten om de betondruk in de wand te verlagen. Dit is niet toegepast vanwege dan de afmetingen teveel afwijken van de stalen varianten.

4 BESCHRIJVING CONSTRUCTIE

De masten bestaan per mastlocatie uit twee afzonderlijke taps toelopende buismasten, het zogenaamde bipole mastprincipe. De beschrijving van de constructie komt overeen met paragraaf 4.2 masten uit Bijlage IV B95-STA-KA-1300143_Wintrack – hybride masten.

De hybride Wintrack masten worden opgebouwd uit beton en staal. Het onderstuk, tot net onder het onderste ophangpunt ten behoeve van de retourstroomgeleider, zal uit betonnen voorgespannen elementen bestaan. Vanaf bovenzijde beton, zal de rest van de mast opgebouwd worden uit staal. De staal doorsnede wordt aangepast op de minimale betondoorsnede, zodat een zuivere conische vorm ontstaat.

De belangrijkste randvoorwaarden uit dit document zijn:

- Trekspanning in de wand komende uit het moment moet volledig door voorspanning opgenomen worden
- De segmenten hebben een maximale lengte van 12 meter. Indien een verticaal element meer dan 35 ton weegt, heeft het de voorkeur de verticale betonnen elementen in losse cirkelsegmenten te vervaardigen. Voor de W4S450 en de W4HK450 masten zijn de segmenten opgedeeld in 12, 7 en 6 meter lengte. Dit om een lengte van 1 meter voor het derde segment te voorkomen.
- Alle betonnen segmenten worden uitgevoerd met een doorgaande ronde sparing. In de doorgaande ronde sparing worden verticale voorspankabels aangebracht met verankeringen in de fundatiepoer
- De uitwendige voorspanning wordt op drie niveaus voor de W4S450 en de W4HK450 in fasen aangebracht. Voor de resterende masttypen wordt dit op twee niveaus uitgevoerd. Vanwege beperkte ruimte in de doorgaande sparing is het niet mogelijk alle voorspankabels langs de omtrek van de sparing te positioneren. De voorspankabels worden binnen de omtrek gelijkmatig verdeeld. Om de voorspankracht naar het beton te kunnen overdragen is het noodzakelijk een in het beton geïntegreerde stalen plaat aan te brengen onder de ankerplaten van de voorspanelementen
- Per segment worden de optredende spanningen, inclusief de voorspanspanning getoetst op de capaciteit. De bepaling van de capaciteit per segment is weergegeven in hoofdstuk 2.4.

Opmerking die hierbij gemaakt moet worden is het dwarskrachtmiddelpunt van de voorspanstrengen niet samenvalt met de betonnen wand. Voor de herverdeling van belasting is een extra stalen eindplaat in het beton nodig. In een vervolgstudie, of mastdetaillering, zal de herverdeling tussen voorspanning en beton verder uitgezocht moeten worden.

Afwijkingen ten opzichte van document Bijlage IV B95-STA-KA-1300143_Wintrack – hybride masten zijn de volgende:

- De ankerbouten in de mastsegmenten worden zodanig voorgespannen dat bij een belasting uit mast en geleiders tot de Ultimate Limit State (ULS) de voorspanning niet opgeheven wordt. De ULS belasting is in de ontwerpnorm NEN-EN 50341 gedefinieerd als de maximale belasting uit mast en geleiders met toepassing van belastingsfactoren. De ankerbouten worden gedimensioneerd op de uiterste grenstoestand (ULS) trekbelasting als gedefinieerd in de ontwerpnorm. De maximale betondruk in de wand is de optelsom van de druk door voorspanning, uitwendige belasting op de mast en een reductie door de afname van voorspanning bij een uitwendige druk.

$$\frac{\Delta P_{beton} \cdot l_{beton}}{E_{beton} \cdot A_{beton}} = \Delta L = \frac{\Delta P_{\ anker} \cdot l_{anker}}{E_{anker} \cdot A_{anker}}$$

$$P_{uitw} = \Delta P_{beton} + \Delta P_{anker}$$

  De belastingsverdeling is afhankelijk van de stijfheidsverhouding tussen de betonnen wand en de voorspanankers. De indrukking van het beton (ΔL) en de ankers geeft toename van de kracht op het beton P_{beton} en afname van de voorspanning in de ankers (P_{anker}). Verhouding van deze krachten is afhankelijk van de verhouding tussen EA_{beton} en EA_{anker} aangezien de lengtes L_{beton} en L_{anker} gelijk zijn.
- De schuifspanning komende uit torsiemoment en dwarskracht zijn in de berekeningen ook meegenomen. Voor steunmasten wordt het torsiemoment verwaarloosd. Voor hoek- of afspanmasten treedt de maximale schuifspanning door torsie en dwarskracht op bij eenzijdige afspanning en het afvallen van één circuit. Dit is conform NEN-EN-50341-3-15 belastingsituatie NL3 (Tabel 4.2.11/NL.3). Voor steunmasten treedt de maximale schuifspanning op komende uit de maximale dwarskracht (Belastingsituatie NL1, tabel 4.2.11/NL1). Om de genoemde schuifspanning te weerstaan worden de betonnen elementen met rond 12 mm ringwapening uitgevoerd. De ringwapening dient voldoende capaciteit te hebben om de schuifspanning te weerstaan. Per betonnen element wordt per meter hoogte het aantal het aantal ringen bepaald. Aangenomen wordt een minimale hart op hart afstand van 100 mm tussen de ringen.

4.1 Materiaalklassen

In de bijlagen zijn de afmetingen, materiaalklassen en unity checks opgenomen. De belangrijkste gegevens per mast zijn hieronder gesommeerd. De resterende gegevens zijn in de bijlagen opgenomen.

Tabel 23 - Hoofdparameters wapening mast W2S400

	Segment	
	1	2
Betonklasse	C55/67	C55/67
Type voorspananker	FeP1860	FeP1860
Aantal anker buitenring	15	15
Aantal anker binnenring	0	0
Diameter dwarswapening (mm)	12	12
Materiaal	Fb550	Fb550
Aantal ringbeugels / meter hoogte	5	5

Tabel 24 - Hoofdparameters wapening mast W2HL400

	Segment	
	1	2
Betonklasse	C70/85	C70/85
Type voorspananker	FeP1860	FeP1860
Aantal anker buitenring	18	12
Aantal anker binnenring	8	8
Diameter dwarswapening (mm)	12	12
Materiaal	Fb550	Fb550
Aantal ringbeugels / meter hoogte	5	5

Tabel 25 - Hoofdparameters wapening mast W4S350

	Segment	
	1	2
Betonklasse	C55/67	C55/67
Type voorspananker	FeP1860	FeP1860
Aantal anker buitenring	12	8
Aantal anker binnenring	4	4
Diameter dwarswapening (mm)	12	12
Materiaal	Fb550	Fb550
Aantal ringbeugels / meter hoogte	5	5

Tabel 26 - Hoofdparameters wapening mast W4HL350

	Segment	
	1	2
Betonklasse	C70/85	C70/85
Type voorspananker	FeP1860	FeP1860
Aantal anker buitenring	20	16
Aantal anker binnenring	8	8
Diameter dwarswapening (mm)	12	12
Materiaal	Fb550	Fb550
Aantal ringbeugels / meter hoogte	5	5

Tabel 27 - Hoofdparameters wapening mast W4S400

	Segment	
	1	2
Betonklasse	C55/67	C55/67
Type voorspananker	FeP1860	FeP1860
Aantal anker buitenring	12	10
Aantal anker binnenring	8	6
Diameter dwarswapening (mm)	12	12
Materiaal	Fb550	Fb550
Aantal ringbeugels / meter hoogte	5	5

Tabel 28 - Hoofdparameters wapening mast W4HL400

	Segment	
	1	2
Betonklasse	C70/85	C70/85
Type voorspananker	FeP1860	FeP1860
Aantal anker buitenring	20	16
Aantal anker binnenring	8	8
Diameter dwarswapening (mm)	12	12
Materiaal	Fb550	Fb550
Aantal ringbeugels / meter hoogte	5	5

Tabel 29 - Hoofdparameters wapening mast W4S450

	Segment		
	1	2	3
Betonklasse	C55/67	C55/67	C55/67
Type voorspananker	FeP1860	FeP1860	FeP1860
Aantal anker buitenring	12	10	10
Aantal anker binnenring	8	6	4
Diameter dwarswapening (mm)	12	12	12
Materiaal	Fb550	Fb550	Fb550
Aantal ringbeugels / meter hoogte	5	5	5

Tabel 30 - Hoofdparameters wapening mast W4HK450

	Segment		
	1	2	3
Betonklasse	C70/85	C70/85	C70/85
Type voorspananker	FeP1860	FeP1860	FeP1860
Aantal anker buitenring	20	16	14
Aantal anker binnenring	8	8	6
Diameter dwarswapening (mm)	12	12	12
Materiaal	Fb550	Fb550	Fb550
Aantal ringbeugels / meter hoogte	5	5	5

Tabel 31 - Hoofdparameters wapening mast W6S400

	Segment	
	1	2
Betonklasse	C55/67	C55/67
Type voorspananker	FeP1860	FeP1860
Aantal anker buitenring	12	12
Aantal anker binnenring	4	4
Diameter dwarswapening (mm)	12	12
Materiaal	Fb550	Fb550
Aantal ringbeugels / meter hoogte	5	5

Tabel 32 - Hoofdparameters wapening mast W6HL400

	Segment	
	1	2
Betonklasse	C70/85	C70/85
Type voorspananker	FeP1860	FeP1860
Aantal anker buitenring	25	18
Aantal anker binnenring	8	8
Diameter dwarswapening (mm)	12	12
Materiaal	Fb550	Fb550
Aantal ringbeugels / meter hoogte	5	5

Overzicht van de gegevens van de genoemde masten zijn opgenomen in de bijlagen.

4.2 Elektrische aarding

Het hybride mastlichaam en fundament dient aan de onderstaande aardingseisen te voldoen:

- De aarding van het mastlichaam en de aarding in het fundament moet één geheel vormen;
- De geleiding van bliksem- en kortsluitstromen, zal door separate geleiders aan de binnenzijde van de mast geschieden. Deze geleiding zal afgeschermd moeten worden van de betonwapening en de voorspanstrengen;
- Blikseminslag en kortsluitstromen moeten voldoende afgevloeid worden naar de grond zonder schade aan de mast of fundament te bewerkstelligen;
- Het aardingssysteem moet aan de eisen van isolatie coördinatie voldoen;
- Aan de rand van de ZRO grens, dient bij kortsluiting of blikseminslag de potentiaal aan de gestelde eisen te voldoen;
- De stap- en aanraakspanning van het mastlichaam en fundament moet aan de gestelde eisen voldoen;
- Alle stalen elementen in het mastlichaam moet elektrisch gekoppeld zijn aan het interne aardingssysteem.

5 CONCLUSIE HYBRIDE MASTEN

Controle van de masten is opgenomen in de bijlagen. Het betonnen onderstuk wordt evenals de rapportage van de masten geheel uit beton uitgevoerd, getoetst op betonspanning en afschuiving. Het stalen bovendeel wordt getoetst op sterkte, inclusief plooi. De achterliggende formules uit deze controle zijn tevens in de bijlagen opgenomen.

Type mast	Maximale betonspanning (UC)	Maximale betonafschuiving (UC)	Maximale plooi belasting (UC)
W2S400	0.83	0.08	0.92
W2HL400	0.87	0.18	0.95
W4S350	0.96	0.10	0.98
W4HL350	0.98	0.24	0.98
W4S400	0.98	0.10	0.96
W4HL400	0.98	0.24	0.98
W4S450	0.90	0.11	1.00
W4HK450	0.94	0.20	0.98
W6S400	0.97	0.12	0.92
W6HL400	0.97	0.37	0.92

Voor het betondeel gelden de volgende twee aanvullende conclusies.

1) Een aantal mastelementen voldoet niet aan het criterium van maximaal 35 ton, het zwaarste element is meer dan driemaal dit gewicht. Een oplossing is de hoogte van de elementen te reduceren. In de praktijk betekent dit dat een aantal elementen gelimiteerd wordt tot 3 a 4 meter hoogte. Een andere oplossing is om de elementen op locatie uit een aantal twee tot vier, segmenten samen te stellen. Deze opties zijn momenteel niet verder uitgewerkt.
2) De optredende spanning in het beton zit tegen de toelaatbare grens aan, dit is zichtbaar gemaakt in de Unity Check. In de ontwerpfase kan voor een ruimere marge gekozen worden.

BIJLAGE A BEREKENING W2S400

BIJLAGE B BEREKENING W2HL400

BIJLAGE C BEREKENING W4S350

BIJLAGE D BEREKENING W4HL350

BIJLAGE E BEREKENING W4S400

BIJLAGE F BEREKENING W4HL400

BIJLAGE G BEREKENING W4S450

BIJLAGE H BEREKENING W4HK450

BIJLAGE I BEREKENING W6S400

BIJLAGE J BEREKENING W6HL400

W2HL400 Bijlage B

Segment	**1**	
Lengte	**12**	**m**
Gewicht	**97.3**	**ton**

Betonklasse	B	Voldoet
Voorspananker	FeP1860	
Nkabel; `toegepast Buiten	18	Voldoet
Nkabel; `toegepast Binnen	8	
Dwarswapening	12	rond
Materiaal	550	Fb550
Aantal ringbeugels/meter hoogte	5	Voldoet

Keuze Betonklasse	A	B	C	D
	C55/67	C70/85	C80/95	C90/105
fck	55	70	80	90
yck	1.5	1.5	1.5	1.5
fcd	-36.7	-46.7	-53.3	-60.0
Trekspanning	0	0	0	0

Optredende spanningen

Segment	1		
Ingevulde wanddikte	500		
	Voet	Top	
Buitendiameter	2800	2420	mm
Buitenomtrek	8796	7603	mm
Wanddikte	500	500	mm
Binnendiameter	1800	1420	mm
Doorsnede	Hol	Hol	
Omtrek/dikte	17.59	15.21	Verhouding
Oppervlak	3612832	3016327	mm2
Weerstandsmoment	1787061321	1226772553	mm3
Maximale moment	35651	kNm	
Maximale moment + 2de orde	39217	kNm	
Maximaal dwarskracht	968	kN	
Maximaal torsiemoment	14750	kNmm	
Maximaal normaalkracht	3491	kN	
Spanning tgv normaalkracht	1.0	N/mm2	
Spanning tgv moment	22.0	N/mm2	
2de orde effect verrekening	10%		
Factor e.g	1.2		
Maximale drukspanning	-23.0	Mpa	
Toelaatbare spanning	-46.7	Komende uit betonklasse	
Maximale trekspanning	21.3	MPa	
Toelaatbare trekspanning	0.0	MPa	

Voorspanning

Benodigde voorspanning ULS	21.3	Mpa
Benodigde voorspanning SLS	18	Mpa
Benodigde voorspankracht	76664	kN
Resulterende betonspanningen		
Trekzijde	0	Mpa
Drukzijde	-44	Mpa
Na relaxatie	-40	MPa
Keuze voorspankabels	FeP1860	
Toelaatbare spanning	1200	MPa
Astreng	150	mm2
streng/kabel	19	
Akabel	2850	mm2
Benodigde voorspankracht	76664	kN
Nkabel; benodigd	23	
Nkabel; `toegepast Buiten	18	
Nkabel; `toegepast Binnen	8	
Ankerverdeling top		
Gegeven E6-19		
Randafstand ankers	230	mm
Minimale hoh-afstand ankers	300	mm
Anker circel buiten	1960	mm
Anker cirkel binnen	1360	mm
Omtrek ankercirkel buiten	6158	mm
Omtrek ankercirkel binnen	4273	mm
Aantal plaatsbare ankers buitenring	20	
Aantal plaatsbare ankers binnenring	14	

Afschuiving in wapening door dwarskracht **(NEN-EN 1992-1-1 Hfst. 6.2.3)**

Max. dwarskracht in segment	968	kN
Max. dwarskracht / doorsnede	959	kN
Maximale optredende afschuiving in de wand	959	kN
Hoek loodrecht dwarskracht/drukdiagonaal	30	21,8≤Θ≤45
cot Θ	2	hoek
alfa	80	
cot alfa	0.18	
Asw	113	mm2
s	200	mm
z (horende max. dwarskracht)	2430	mm
fywd	478	Mpa
VRD,S	6176	kN
Toetsing afschuiving door dwarskracht	0.16	

Toetsing betonspanning	0.85	Voldoet
Toetsing afschuiving in wand	0.16	Voldoet

Afschuiving in wapening door torsie

Maximaal torsie	14750	kNmm
Maximaal afschuiving torsie / doorsnede	15	kN
Maximaal dwarskracht bij torsie	435	kN
Max. afschuiving wand door dwarskracht	435	kN
Hoek loodrecht dwarskracht/drukdiagonaal	30	21,8≤Θ≤45
cot Θ	2	hoek
alfa	80	
cot alfa	0.18	
Asw	113	mm2
s	200	mm
z (dwarskracht)	2430	mm
z (torsie)	6063	mm
fywd	478	Mpa
VRD,max (dwarskracht)	6176	kN
VRD,max (torsie)	15409	kN
Toetsing afschuiving door dwarskracht	0.07	
Toetsing afschuiving door torsie	0.00	
Totaal	0.07	

W2HL400 Bijlage B

Segment	**2**	
Lengte	**10**	**m**
Gewicht	**63.4**	**ton**

Betonklasse	B	Voldoet
Voorspananker	FeP1860	
Nkabel; `toegepast Buiten	12	Voldoet
Nkabel; `toegepast Binnen	8	
Dwarswapening	12	rond
Materiaal	550	Fb550
Aantal ringbeugels/meter hoogte	5	Voldoet

Keuze Betonklasse	A	B	C	D
	C55/67	C70/85	C80/95	C90/105
fck	55	70	80	90
yck	1.5	1.5	1.5	1.5
fcd	-36.7	-46.7	-53.3	-60.0
Trekspanning	0	0	0	0

Optredende spanningen

Segment	2		
Ingevulde wanddikte	450		
	Voet	Top	
Buitendiameter	2420	2104	mm
Buitenomtrek	7603	6609	mm
Wanddikte	450	450	mm
Binnendiameter	1520	1204	mm
Doorsnede	Hol	Hol	
Omtrek/dikte	16.90	14.69	Verhouding
Oppervlak	2785380	2338001	mm2
Weerstandsmoment	1175145488	816141526	mm3
Maximale moment	24088	kNm	
Maximale moment + 2de orde	26497	kNm	
Maximaal dwarskracht	959	kN	
Maximaal torsiemoment	14750	kNmm	
Maximaal normaalkracht	2345	kN	
Spanning tgv normaalkracht	0.8	N/mm2	
Spanning tgv moment	22.6	N/mm2	
2de orde effect verrekening	10%		
Factor e.g	1.2		
Maximale drukspanning	-23.4	Mpa	
Toelaatbare spanning	-46.7	Komende uit betonklasse	
Maximale trekspanning	21.9	MPa	
Toelaatbare trekspanning	0.0	MPa	

Voorspanning

Benodigde voorspanning ULS	21.9	Mpa
Benodigde voorspanning SLS	18	Mpa
Benodigde voorspankracht	61053	kN
Resulterende betonspanningen		
Trekzijde	0	Mpa
Drukzijde	-45	Mpa
Na relaxatie	-40	MPa
Keuze voorspankabels	FeP1860	
Toelaatbare spanning	1200	MPa
Astreng	150	mm2
streng/kabel	19	
Akabel	2850	mm2
Benodigde voorspankracht	61053	kN
Nkabel; benodigd	18	
Nkabel; `toegepast Buiten	12	
Nkabel; `toegepast Binnen	8	
Ankerverdeling top		
Gegeven E6-19		
Randafstand ankers	230	mm
Minimale hoh-afstand ankers	300	mm
Anker circel buiten	1644	mm
Anker cirkel binnen	1044	mm
Omtrek ankercirkel buiten	5164	mm
Omtrek ankercirkel binnen	3279	mm
Aantal plaatsbare ankers buitenring	17	
Aantal plaatsbare ankers binnenring	10	

Afschuiving in wapening door dwarskracht **(NEN-EN 1992-1-1 Hfst. 6.2.3)**

Max. dwarskracht in segment	959	kN
Max. dwarskracht / doorsnede	952	kN
Maximale optredende afschuiving in de wand	952	kN
Hoek loodrecht dwarskracht/drukdiagonaal	30	21,8≤Θ≤45
cot Θ	2	hoek
alfa	80	
cot alfa	0.18	
Asw	113	mm2
s	200	mm
z (horende max. dwarskracht)	2090	mm
fywd	478	Mpa
VRD,S	5312	kN
Toetsing afschuiving door dwarskracht	0.18	

Toetsing betonspanning	0.87	Voldoet
Toetsing afschuiving in wand	0.18	Voldoet

Afschuiving in wapening door torsie

Maximaal torsie	14750	kNmm
Maximaal afschuiving torsie / doorsnede	18	kN
Maximaal dwarskracht bij torsie	432	kN
Max. afschuiving wand door dwarskracht	432	kN
Hoek loodrecht dwarskracht/drukdiagonaal	30	21,8≤Θ≤45
cot Θ	2	hoek
alfa	80	
cot alfa	0.18	
Asw	113	mm2
s	200	mm
z (dwarskracht)	2090	mm
z (torsie)	5215	mm
fywd	478	Mpa
VRD,max (dwarskracht)	5312	kN
VRD,max (torsie)	13254	kN
Toetsing afschuiving door dwarskracht	0.08	
Toetsing afschuiving door torsie	0.00	
Totaal	0.08	

W2HL400 Bijlage B

Hoogte overgang Beton/Staal	22000	mm

Eigenschappen mast

Type mast	W2HL400	
Staalkwaliteit	S355	
Toelaatbare spanning	284	
Epsilon staal	0.81	

Uitgangspunten

Windgebied	II	
Bebouwd of onbebouwd	Onbebouwd	
2e orde	10%	

Afmetingen

Topdiameter	0.80	m
Voetdiameter	2.1	m
Hoogte overgang beton/staal	22.00	m
Hoogte mast	63.20	m
Wanddikte	18	mm
Gewicht	35965	kg

Hoogte

GW / opgw	40.60	m
380C1F1	30.60	m
380C1F2	20.40	m
380C1F3	10.20	m
RTG	0.10	m
380C2F1	30.60	m
380C2F2	20.40	m
380C2F3	10.20	m

Krachten	**hoogte m**	**Fver kN**	**Floodrecht kN**	**F// kN**	**FSamengesteld kN**	**Moment per geleider kN**
GW / opgw	40.6	18.7	65.5	0.0	65.5	2660.0
380C1F1	30.6	37.4	119.3	0.0	119.3	3650.3
380C1F2	20.4	58.8	246.4	0.0	246.4	5027.4
380C1F3	10.2	58.8	241.8	0.0	241.8	2466.6
RTG	0.1	29.4	118.1	-224.5	253.6	25.4
380C2F1	30.6	0.0	0.0	0.0	0.0	0.0
380C2F2	20.4	0.0	0.0	0.0	0.0	0.0
380C2F3	10.2	0.0	0.0	0.0	0.0	0.0

Stuwdruk		791.3	N
Moment overgang Beton/Staal (Inclusief 2e orde)		16083	kNm

Controle spanning ten gevolge van normaalkracht

Plooigevoeligheid normaalkracht			
Reductiefactor normaalkracht	ρa	0.66	
Effectieve oppervlakte	Aeff	77406	mm2
Optredende spanning t.g.v. normaalkracht			

Controle spanning ten gevolge van buigend moment

Buigend moment plooigevoeligheid			
Reductiefactor buigend moment	ρa	0.96	
Effectieve weerstandmoment	Weff	58175556	mm3
Optredende spanning t.g.v. buigend moment			

Controle spanning ten gevolge van normaalkracht en buigend moment

Totaal optredende spanning	271	N/mm2
Unity check	0.95	Voldoet

W2S400 Bijlage A

Segment	**1**	
Lengte	**12**	**m**
Gewicht	**61.0**	**ton**

Betonklasse	A	Voldoet
Voorspananker	FeP1860	
Nkabel; `toegepast Buiten	12	Voldoet
Nkabel; `toegepast Binnen	8	
Dwarswapening	12	rond
Materiaal	550	Fb550
Aantal ringbeugels/meter hoogte	5	Voldoet

Keuze Betonklasse	A	B	C	D
	C55/67	C70/85	C80/95	C90/105
fck	55	70	80	90
yck	1.5	1.5	1.5	1.5
fcd	-36.7	-46.7	-53.3	-60.0
Trekspanning	0	0	0	0

Optredende spanningen

Segment	1		
Ingevulde wanddikte	400		
	Voet	Top	
Buitendiameter	2200	1893	mm
Buitenomtrek	6912	5948	mm
Wanddikte	400	400	mm
Binnendiameter	1400	1093	mm
Doorsnede	Hol	Hol	
Omtrek/dikte	17.28	14.87	Verhouding
Oppervlak	2261947	1876700	mm2
Weerstandsmoment	873933956	592303534	mm3
Maximale moment	13055	kNm	
Maximale moment + 2de orde	14361	kNm	
Maximaal dwarskracht	366	kN	
Maximaal torsiemoment	0	kNmm	
Maximaal normaalkracht	2078	kN	
Spanning tgv normaalkracht	0.9	N/mm2	
Spanning tgv moment	16.5	N/mm2	
2de orde effect verrekening	10%		
Factor e.g	1.2		
Maximale drukspanning	-17.4	Mpa	
Toelaatbare spanning	-36.7	Komende uit betonklasse	
Maximale trekspanning	15.8	MPa	
Toelaatbare trekspanning	0.0	MPa	

Voorspanning

Benodigde voorspanning ULS	15.8	Mpa
Benodigde voorspanning SLS	11	Mpa
Benodigde voorspankracht	35610	kN
Resulterende betonspanningen		
Trekzijde	0	Mpa
Drukzijde	-33	Mpa
Na relaxatie	-29	MPa
Keuze voorspankabels	FeP1860	
Toelaatbare spanning	1200	MPa
Astreng	150	mm2
streng/kabel	19	
Akabel	2850	mm2
Benodigde voorspankracht	35610	kN
Nkabel; benodigd	11	
Nkabel; `toegepast Buiten	12	
Nkabel; `toegepast Binnen	8	
Ankerverdeling top		
Gegeven E6-19		
Randafstand ankers	230	mm
Minimale hoh-afstand ankers	300	mm
Anker circel buiten	1433	mm
Anker cirkel binnen	833	mm
Omtrek ankercirkel buiten	4503	mm
Omtrek ankercirkel binnen	2618	mm
Aantal plaatsbare ankers buitenring	15	
Aantal plaatsbare ankers binnenring	8	

Afschuiving in wapening door dwarskracht **(NEN-EN 1992-1-1 Hfst. 6.2.3)**

Max. dwarskracht in segment	366	kN
Max. dwarskracht / doorsnede	345	kN
Maximale optredende afschuiving in de wand	345	kN
Hoek loodrecht dwarskracht/drukdiagonaal	30	21,8≤Θ≤45
cot Θ	2	hoek
alfa	80	
cot alfa	0.18	
Asw	113	mm2
s	200	mm
z (horende max. dwarskracht)	1899	mm
fywd	478	Mpa
VRD,S	4826	kN
Toetsing afschuiving door dwarskracht	0.07	

Toetsing betonspanning	0.80	Voldoet
Toetsing afschuiving in wand	0.07	Voldoet

Afschuiving in wapening door torsie

Maximaal torsie	0	kNmm
Maximaal afschuiving torsie / doorsnede	0	kN
Maximaal dwarskracht bij torsie	0	kN
Max. afschuiving wand door dwarskracht	0	kN
Hoek loodrecht dwarskracht/drukdiagonaal	30	21,8≤Θ≤45
cot Θ	2	hoek
alfa	80	
cot alfa	0.18	
Asw	113	mm2
s	200	mm
z (dwarskracht)	1899	mm
z (torsie)	1257	mm
fywd	478	Mpa
VRD,max (dwarskracht)	4826	kN
VRD,max (torsie)	3194	kN
Toetsing afschuiving door dwarskracht	0.00	
Toetsing afschuiving door torsie	0.00	
Totaal	0.00	

W2S400 Bijlage A

Segment	**2**	
Lengte	**11**	**m**
Gewicht	**41.4**	**ton**

Betonklasse	A	Voldoet
Voorspananker	FeP1860	
Nkabel; `toegepast Buiten	10	Voldoet
Nkabel; `toegepast Binnen	4	
Dwarswapening	12	rond
Materiaal	550	Fb550
Aantal ringbeugels/meter hoogte	5	Voldoet

Keuze Betonklasse	A	B	C	D
	C55/67	C70/85	C80/95	C90/105
fck	55	70	80	90
yck	1.5	1.5	1.5	1.5
fcd	-36.7	-46.7	-53.3	-60.0
Trekspanning	0	0	0	0

Optredende spanningen

Segment	2		
Ingevulde wanddikte	350		
	Voet	Top	
Buitendiameter	1893	1612	mm
Buitenomtrek	5948	5066	mm
Wanddikte	350	350	mm
Binnendiameter	1193	912	mm
Doorsnede	Hol	Hol	
Omtrek/dikte	17.00	14.47	Verhouding
Oppervlak	1697091	1388091	mm2
Weerstandsmoment	561238659	369355499	mm3
Maximale moment	8783	kNm	
Maximale moment + 2de orde	9661	kNm	
Maximaal dwarskracht	344	kN	
Maximaal torsiemoment	0	kNmm	
Maximaal normaalkracht	1360	kN	
Spanning tgv normaalkracht	0.8	N/mm2	
Spanning tgv moment	17.2	N/mm2	
2de orde effect verrekening	10%		
Factor e.g	1.2		
Maximale drukspanning	-18.0	Mpa	
Toelaatbare spanning	-36.7	Komende uit betonklasse	
Maximale trekspanning	16.6	MPa	
Toelaatbare trekspanning	0.0	MPa	

Voorspanning

Benodigde voorspanning ULS	16.6	Mpa
Benodigde voorspanning SLS	11	Mpa
Benodigde voorspankracht	28224	kN
Resulterende betonspanningen		
Trekzijde	0	Mpa
Drukzijde	-35	Mpa
Na relaxatie	-30	MPa
Keuze voorspankabels	FeP1860	
Toelaatbare spanning	1200	MPa
Astreng	150	mm2
streng/kabel	19	
Akabel	2850	mm2
Benodigde voorspankracht	28224	kN
Nkabel; benodigd	9	
Nkabel; `toegepast Buiten	10	
Nkabel; `toegepast Binnen	4	
Ankerverdeling top		
Gegeven E6-19		
Randafstand ankers	230	mm
Minimale hoh-afstand ankers	300	mm
Anker circel buiten	1152	mm
Anker cirkel binnen	552	mm
Omtrek ankercirkel buiten	3620	mm
Omtrek ankercirkel binnen	1735	mm
Aantal plaatsbare ankers buitenring	12	
Aantal plaatsbare ankers binnenring	5	

Afschuiving in wapening door dwarskracht **(NEN-EN 1992-1-1 Hfst. 6.2.3)**

Max. dwarskracht in segment	344	kN
Max. dwarskracht / doorsnede	322	kN
Maximale optredende afschuiving in de wand	322	kN
Hoek loodrecht dwarskracht/drukdiagonaal	30	21,8≤Θ≤45
cot Θ	2	hoek
alfa	80	
cot alfa	0.18	
Asw	113	mm2
s	200	mm
z (horende max. dwarskracht)	1591	mm
fywd	478	Mpa
VRD,S	4043	kN
Toetsing afschuiving door dwarskracht	0.08	

Toetsing betonspanning	0.83	Voldoet
Toetsing afschuiving in wand	0.08	Voldoet

Afschuiving in wapening door torsie

Maximaal torsie	0	kNmm
Maximaal afschuiving torsie / doorsnede	0	kN
Maximaal dwarskracht bij torsie	0	kN
Max. afschuiving wand door dwarskracht	0	kN
Hoek loodrecht dwarskracht/drukdiagonaal	30	21,8≤Θ≤45
cot Θ	2	hoek
alfa	80	
cot alfa	0.18	
Asw	113	mm2
s	200	mm
z (dwarskracht)	1591	mm
z (torsie)	1414	mm
fywd	478	Mpa
VRD,max (dwarskracht)	4043	kN
VRD,max (torsie)	3593	kN
Toetsing afschuiving door dwarskracht	0.00	
Toetsing afschuiving door torsie	0.00	
Totaal	0.00	

W2S400 Bijlage A

Hoogte overgang Beton/Staal	23000	mm

Eigenschappen mast

Type mast	W2S400	
Staalkwaliteit	S355	
Toelaatbare spanning	284	
Epsilon staal	0.81	

Uitgangspunten

Windgebied	II	
Bebouwd of onbebouwd	Onbebouwd	
2e orde	10%	

Afmetingen

Topdiameter	0.80	m
Voetdiameter	1.612	m
Hoogte overgang beton/staal	23.00	m
Hoogte mast	54.80	m
Wanddikte	12	mm
Gewicht	19286	kg

Hoogte

GW / opgw	31.10	m
RTG	0.10	m
380C1F1	25.80	m
380C1F2	15.60	m
380C1F3	5.40	m
380C2F1	25.80	m
380C2F2	15.60	m
380C2F3	5.40	m

Krachten	**hoogte m**	**Fver kN**	**Floodrecht kN**	**F// kN**	**FSamengesteld kN**	**Moment per geleider kN**
GW / opgw	31.1	4.6	14.6	0.0	14.6	454.4
RTG	0.1	9.2	21.0	0.0	21.0	2.1
380C1F1	25.8	34.1	85.5	0.0	85.5	2206.5
380C1F2	15.6	34.1	78.8	0.0	78.8	1229.3
380C1F3	5.4	34.1	70.0	0.0	70.0	378.0
380C2F1	25.8	0.0	0.0	0.0	0.0	0.0
380C2F2	15.6	0.0	0.0	0.0	0.0	0.0
380C2F3	5.4	0.0	0.0	0.0	0.0	0.0

Stuwdruk		1469.2	N
Moment overgang Beton/Staal (Inclusief 2e orde)		6314	kNm

Controle spanning ten gevolge van normaalkracht

Plooigevoeligheid normaalkracht			
Reductiefactor normaalkracht	ρa	0.61	
Effectieve oppervlakte	Aeff	36822	mm2
Optredende spanning t.g.v. normaalkracht			

Controle spanning ten gevolge van buigend moment

Buigend moment plooigevoeligheid			
Reductiefactor buigend moment	ρa	0.91	
Effectieve weerstandmoment	Weff	21804601	mm3
Optredende spanning t.g.v. buigend moment			

Controle spanning ten gevolge van normaalkracht en buigend moment

Totaal optredende spanning	261	N/mm2
Unity check	0.92	Voldoet

W4HK450 Bijlage H

Segment	**1**	
Lengte	**12**	**m**
Gewicht	**120.1**	**ton**

Betonklasse	B	Voldoet
Voorspananker	FeP1860	
Nkabel; `toegepast Buiten	20	Voldoet
Nkabel; `toegepast Binnen	8	
Dwarswapening	12	rond
Materiaal	550	Fb550
Aantal ringbeugels/meter hoogte	5	Voldoet

Keuze Betonklasse	A	B	C	D
	C55/67	C70/85	C80/95	C90/105
fck	55	70	80	90
yck	1.5	1.5	1.5	1.5
fcd	-36.7	-46.7	-53.3	-60.0
Trekspanning	0	0	0	0

Optredende spanningen

Segment	1		
Ingevulde wanddikte	500		
	Voet	Top	
Buitendiameter	3300	2878	mm
Buitenomtrek	10367	9042	mm
Wanddikte	500	500	mm
Binnendiameter	2300	1878	mm
Doorsnede	Hol	Hol	
Omtrek/dikte	20.73	18.08	Verhouding
Oppervlak	4398230	3735446	mm2
Weerstandsmoment	2695581697	1916085365	mm3
Maximale moment	52192	kNm	
Maximale moment + 2de orde	57412	kNm	
Maximaal dwarskracht	1146	kN	
Maximaal torsiemoment	1736695	kNmm	
Maximaal normaalkracht	4447	kN	
Spanning tgv normaalkracht	1.0	N/mm2	
Spanning tgv moment	22.2	N/mm2	
2de orde effect verrekening	10%		
Factor e.g	1.2		
Maximale drukspanning	-23.2	Mpa	
Toelaatbare spanning	-46.7	Komende uit betonklasse	
Maximale trekspanning	21.4	MPa	
Toelaatbare trekspanning	0.0	MPa	

Voorspanning

Benodigde voorspanning ULS	21.4	Mpa
Benodigde voorspanning SLS	16	Mpa
Benodigde voorspankracht	90340	kN
Resulterende betonspanningen		
Trekzijde	0	Mpa
Drukzijde	-45	Mpa
Na relaxatie	-41	MPa
Keuze voorspankabels	FeP1860	
Toelaatbare spanning	1200	MPa
Astreng	150	mm2
streng/kabel	19	
Akabel	2850	mm2
Benodigde voorspankracht	90340	kN
Nkabel; benodigd	27	
Nkabel; `toegepast Buiten	20	
Nkabel; `toegepast Binnen	8	
Ankerverdeling top		
Gegeven E6-19		
Randafstand ankers	230	mm
Minimale hoh-afstand ankers	300	mm
Anker circel buiten	2418	mm
Anker cirkel binnen	1818	mm
Omtrek ankercirkel buiten	7597	mm
Omtrek ankercirkel binnen	5712	mm
Aantal plaatsbare ankers buitenring	25	
Aantal plaatsbare ankers binnenring	19	

Afschuiving in wapening door dwarskracht **(NEN-EN 1992-1-1 Hfst. 6.2.3)**

Max. dwarskracht in segment	1146	kN
Max. dwarskracht / doorsnede	1113	kN
Maximale optredende afschuiving in de wand	1113	kN
Hoek loodrecht dwarskracht/drukdiagonaal	30	21,8≤Θ≤45
cot Θ	2	hoek
alfa	80	
cot alfa	0.18	
Asw	113	mm2
s	200	mm
z (horende max. dwarskracht)	2887	mm
fywd	478	Mpa
VRD,S	7338	kN
Toetsing afschuiving door dwarskracht	0.15	

Toetsing betonspanning	0.87	Voldoet
Toetsing afschuiving in wand	0.15	Voldoet

Afschuiving in wapening door torsie

Maximaal torsie	1736695	kNmm
Maximaal afschuiving torsie / doorsnede	1455	kN
Maximaal dwarskracht bij torsie	516	kN
Max. afschuiving wand door dwarskracht	516	kN
Hoek loodrecht dwarskracht/drukdiagonaal	30	21,8≤Θ≤45
cot Θ	2	hoek
alfa	80	
cot alfa	0.18	
Asw	113	mm2
s	200	mm
z (dwarskracht)	2887	mm
z (torsie)	7501	mm
fywd	478	Mpa
VRD,max (dwarskracht)	7338	kN
VRD,max (torsie)	19062	kN
Toetsing afschuiving door dwarskracht	0.07	
Toetsing afschuiving door torsie	0.08	
Totaal	0.15	

W4HK450 Bijlage H

Segment	**2**	
Lengte	**7**	**m**
Gewicht	**56.4**	**ton**

Betonklasse	B	Voldoet
Voorspananker	FeP1860	
Nkabel; `toegepast Buiten	16	Voldoet
Nkabel; `toegepast Binnen	8	
Dwarswapening	12	rond
Materiaal	550	Fb550
Aantal ringbeugels/meter hoogte	5	Voldoet

Keuze Betonklasse	A	B	C	D
	C55/67	C70/85	C80/95	C90/105
fck	55	70	80	90
yck	1.5	1.5	1.5	1.5
fcd	-36.7	-46.7	-53.3	-60.0
Trekspanning	0	0	0	0

Optredende spanningen

Segment	2		
Ingevulde wanddikte	450		
	Voet	Top	
Buitendiameter	2878	2632	mm
Buitenomtrek	9042	8268	mm
Wanddikte	450	450	mm
Binnendiameter	1978	1732	mm
Doorsnede	Hol	Hol	
Omtrek/dikte	20.09	18.37	Verhouding
Oppervlak	3432588	3084626	mm2
Weerstandsmoment	1818223575	1454252159	mm3
Maximale moment	38569	kNm	
Maximale moment + 2de orde	42426	kNm	
Maximaal dwarskracht	1111	kN	
Maximaal torsiemoment	1736695	kNmm	
Maximaal normaalkracht	3033	kN	
Spanning tgv normaalkracht	0.9	N/mm2	
Spanning tgv moment	23.5	N/mm2	
2de orde effect verrekening	10%		
Factor e.g	1.2		
Maximale drukspanning	-24.4	Mpa	
Toelaatbare spanning	-46.7	Komende uit betonklasse	
Maximale trekspanning	22.8	MPa	
Toelaatbare trekspanning	0.0	MPa	

Voorspanning

Benodigde voorspanning ULS	22.8	Mpa
Benodigde voorspanning SLS	17	Mpa
Benodigde voorspankracht	77930	kN
Resulterende betonspanningen		
Trekzijde	0	Mpa
Drukzijde	-47	Mpa
Na relaxatie	-42	MPa
Keuze voorspankabels	FeP1860	
Toelaatbare spanning	1200	MPa
Astreng	150	mm2
streng/kabel	19	
Akabel	2850	mm2
Benodigde voorspankracht	77930	kN
Nkabel; benodigd	23	
Nkabel; `toegepast Buiten	16	
Nkabel; `toegepast Binnen	8	
Ankerverdeling top		
Gegeven E6-19		
Randafstand ankers	230	mm
Minimale hoh-afstand ankers	300	mm
Anker circel buiten	2172	mm
Anker cirkel binnen	1572	mm
Omtrek ankercirkel buiten	6823	mm
Omtrek ankercirkel binnen	4938	mm
Aantal plaatsbare ankers buitenring	22	
Aantal plaatsbare ankers binnenring	16	

Afschuiving in wapening door dwarskracht **(NEN-EN 1992-1-1 Hfst. 6.2.3)**

Max. dwarskracht in segment	1111	kN
Max. dwarskracht / doorsnede	1093	kN
Maximale optredende afschuiving in de wand	1093	kN
Hoek loodrecht dwarskracht/drukdiagonaal	30	21,8≤Θ≤45
cot Θ	2	hoek
alfa	80	
cot alfa	0.18	
Asw	113	mm2
s	200	mm
z (horende max. dwarskracht)	2637	mm
fywd	478	Mpa
VRD,S	6703	kN
Toetsing afschuiving door dwarskracht	0.16	

Toetsing betonspanning	0.91	Voldoet
Toetsing afschuiving in wand	0.17	Voldoet

Afschuiving in wapening door torsie

Maximaal torsie	1736695	kNmm
Maximaal afschuiving torsie / doorsnede	1588	kN
Maximaal dwarskracht bij torsie	500	kN
Max. afschuiving wand door dwarskracht	500	kN
Hoek loodrecht dwarskracht/drukdiagonaal	30	21,8≤Θ≤45
cot Θ	2	hoek
alfa	80	
cot alfa	0.18	
Asw	113	mm2
s	200	mm
z (dwarskracht)	2637	mm
z (torsie)	6872	mm
fywd	478	Mpa
VRD,max (dwarskracht)	6703	kN
VRD,max (torsie)	17465	kN
Toetsing afschuiving door dwarskracht	0.07	
Toetsing afschuiving door torsie	0.09	
Totaal	0.17	

W4HK450 Bijlage H

Segment	**3**	
Lengte	**6**	**m**
Gewicht	**41.6**	**ton**

Betonklasse	B	Voldoet
Voorspananker	FeP1860	
Nkabel; `toegepast Buiten	14	Voldoet
Nkabel; `toegepast Binnen	6	
Dwarswapening	12	rond
Materiaal	550	Fb550
Aantal ringbeugels/meter hoogte	5	Voldoet

Keuze Betonklasse	A	B	C	D
	C55/67	C70/85	C80/95	C90/105
fck	55	70	80	90
yck	1.5	1.5	1.5	1.5
fcd	-36.7	-46.7	-53.3	-60.0
Trekspanning	0	0	0	0

Optredende spanningen

Segment	3		
Ingevulde wanddikte	400		
	Voet	Top	
Buitendiameter	2632	2421	mm
Buitenomtrek	8268	7606	mm
Wanddikte	400	400	mm
Binnendiameter	1832	1621	mm
Doorsnede	Hol	Hol	
Omtrek/dikte	20.67	19.01	Verhouding
Oppervlak	2804722	2539609	mm2
Weerstandsmoment	1369763679	1113069589	mm3
Maximale moment	30745	kNm	
Maximale moment + 2de orde	33820	kNm	
Maximaal dwarskracht	1091	kN	
Maximaal torsiemoment	1736695	kNmm	
Maximaal normaalkracht	2369	kN	
Spanning tgv normaalkracht	0.8	N/mm2	
Spanning tgv moment	24.9	N/mm2	
2de orde effect verrekening	10%		
Factor e.g	1.2		
Maximale drukspanning	-25.7	Mpa	
Toelaatbare spanning	-46.7	Komende uit betonklasse	
Maximale trekspanning	24.2	MPa	
Toelaatbare trekspanning	0.0	MPa	

Voorspanning

Benodigde voorspanning ULS	24.2	Mpa
Benodigde voorspanning SLS	18	Mpa
Benodigde voorspankracht	67707	kN
Resulterende betonspanningen		
Trekzijde	0	Mpa
Drukzijde	-50	Mpa
Na relaxatie	-45	MPa
Keuze voorspankabels	FeP1860	
Toelaatbare spanning	1200	MPa
Astreng	150	mm2
streng/kabel	19	
Akabel	2850	mm2
Benodigde voorspankracht	67707	kN
Nkabel; benodigd	20	
Nkabel; `toegepast Buiten	14	
Nkabel; `toegepast Binnen	6	
Ankerverdeling top		
Gegeven E6-19		
Randafstand ankers	230	mm
Minimale hoh-afstand ankers	300	mm
Anker circel buiten	1961	mm
Anker cirkel binnen	1361	mm
Omtrek ankercirkel buiten	6161	mm
Omtrek ankercirkel binnen	4276	mm
Aantal plaatsbare ankers buitenring	20	
Aantal plaatsbare ankers binnenring	14	

Afschuiving in wapening door dwarskracht **(NEN-EN 1992-1-1 Hfst. 6.2.3)**

Max. dwarskracht in segment	1091	kN
Max. dwarskracht / doorsnede	977	kN
Maximale optredende afschuiving in de wand	977	kN
Hoek loodrecht dwarskracht/drukdiagonaal	30	21,8≤Θ≤45
cot Θ	2	hoek
alfa	80	
cot alfa	0.18	
Asw	113	mm2
s	200	mm
z (horende max. dwarskracht)	2038	mm
fywd	478	Mpa
VRD,S	5178	kN
Toetsing afschuiving door dwarskracht	0.19	

Toetsing betonspanning	0.96	Voldoet
Toetsing afschuiving in wand	0.20	Voldoet

Afschuiving in wapening door torsie

Maximaal torsie	1736695	kNmm
Maximaal afschuiving torsie / doorsnede	1726	kN
Maximaal dwarskracht bij torsie	491	kN
Max. afschuiving wand door dwarskracht	491	kN
Hoek loodrecht dwarskracht/drukdiagonaal	30	21,8≤Θ≤45
cot Θ	2	hoek
alfa	80	
cot alfa	0.18	
Asw	113	mm2
s	200	mm
z (dwarskracht)	2038	mm
z (torsie)	6322	mm
fywd	478	Mpa
VRD,max (dwarskracht)	5178	kN
VRD,max (torsie)	16068	kN
Toetsing afschuiving door dwarskracht	0.09	
Toetsing afschuiving door torsie	0.11	
Totaal	0.20	

W4HK450 Bijlage H

Hoogte overgang Beton/Staal	25000	mm

Eigenschappen mast

Type mast	W4HK450	
Staalkwaliteit	S355	
Toelaatbare spanning	284	
Epsilon staal	0.81	

Uitgangspunten

Windgebied	II	
Bebouwd of onbebouwd	Onbebouwd	
2e orde	10%	

Afmetingen

Topdiameter	0.80	m
Voetdiameter	2.425	m
Hoogte overgang beton/staal	25.00	m
Hoogte mast	71.10	m
Wanddikte	22	mm
Gewicht	37694	kg

Hoogte

GW / opgw	45.50	m
150C1F1	34.30	m
150C1F2	22.90	m
150C1F3	11.50	m
RTG	0.20	m
380C1F1	34.30	m
380C1F2	22.90	m
380C1F3	11.50	m

Krachten	hoogte m	Fver kN	Floodrecht kN	F// kN	FSamengesteld kN	Moment per geleider kN
GW / opgw	45.5	5.2	34.7	0.0	34.7	1577.8
150C1F1	34.3	19.2	102.7	0.0	102.7	3523.2
150C1F2	22.9	19.2	96.7	0.0	96.7	2215.4
150C1F3	11.5	19.2	89.2	0.0	89.2	1025.7
RTG	0.2	5.2	24.8	-62.1	66.8	13.4
380C1F1	34.3	38.4	205.4	0.0	205.4	7046.5
380C1F2	22.9	38.4	193.5	0.0	193.5	4430.9
380C1F3	11.5	38.4	178.4	0.0	178.4	2051.4

Stuwdruk		3802.4	N
Moment overgang Beton/Staal (Inclusief 2e orde)		28255	kNm

Controle spanning ten gevolge van normaalkracht

Plooigevoeligheid normaalkracht			
Reductiefactor normaalkracht	ρa	0.68	
Effectieve oppervlakte	Aeff	112662	mm2
Optredende spanning t.g.v. normaalkracht			

Controle spanning ten gevolge van buigend moment

Buigend moment plooigevoeligheid			
Reductiefactor buigend moment	ρa	0.98	
Effectieve weerstandmoment	Weff	96736801	mm3
Optredende spanning t.g.v. buigend moment			

Controle spanning ten gevolge van normaalkracht en buigend moment

Totaal optredende spanning	277	N/mm2
Unity check	0.98	Voldoet

W4HL350 Bijlage D

Segment	**1**	
Lengte	**12**	**m**
Gewicht	**105.9**	**ton**

Betonklasse	B	Voldoet
Voorspananker	FeP1860	
Nkabel; `toegepast Buiten	20	Voldoet
Nkabel; `toegepast Binnen	8	
Dwarswapening	12	rond
Materiaal	550	Fb550
Aantal ringbeugels/meter hoogte	5	Voldoet

Keuze Betonklasse	A	B	C	D
	C55/67	C70/85	C80/95	C90/105
fck	55	70	80	90
yck	1.5	1.5	1.5	1.5
fcd	-36.7	-46.7	-53.3	-60.0
Trekspanning	0	0	0	0

Optredende spanningen

Segment	1		
Ingevulde wanddikte	500		
	Voet	Top	
Buitendiameter	3000	2524	mm
Buitenomtrek	9425	7930	mm
Wanddikte	500	500	mm
Binnendiameter	2000	1524	mm
Doorsnede	Hol	Hol	
Omtrek/dikte	18.85	15.86	Verhouding
Oppervlak	3926991	3179801	mm2
Weerstandsmoment	2127120026	1369220120	mm3
Maximale moment	45865	kNm	
Maximale moment + 2de orde	50452	kNm	
Maximaal dwarskracht	1266	kN	
Maximaal torsiemoment	1740354	kNmm	
Maximaal normaalkracht	3468	kN	
Spanning tgv normaalkracht	0.9	N/mm2	
Spanning tgv moment	24.7	N/mm2	
2de orde effect verrekening	10%		
Factor e.g	1.2		
Maximale drukspanning	-25.6	Mpa	
Toelaatbare spanning	-46.7	Komende uit betonklasse	
Maximale trekspanning	24.0	MPa	
Toelaatbare trekspanning	0.0	MPa	

Voorspanning

Benodigde voorspanning ULS	24.0	Mpa
Benodigde voorspanning SLS	20	Mpa
Benodigde voorspankracht	90541	kN
Resulterende betonspanningen		
Trekzijde	0	Mpa
Drukzijde	-50	Mpa
Na relaxatie	-45	MPa
Keuze voorspankabels	FeP1860	
Toelaatbare spanning	1200	MPa
Astreng	150	mm2
streng/kabel	19	
Akabel	2850	mm2
Benodigde voorspankracht	90541	kN
Nkabel; benodigd	27	
Nkabel; `toegepast Buiten	20	
Nkabel; `toegepast Binnen	8	
Ankerverdeling top		
Gegeven E6-19		
Randafstand ankers	230	mm
Minimale hoh-afstand ankers	300	mm
Anker circel buiten	2064	mm
Anker cirkel binnen	1464	mm
Omtrek ankercirkel buiten	6485	mm
Omtrek ankercirkel binnen	4600	mm
Aantal plaatsbare ankers buitenring	21	
Aantal plaatsbare ankers binnenring	15	

Afschuiving in wapening door dwarskracht **(NEN-EN 1992-1-1 Hfst. 6.2.3)**

Max. dwarskracht in segment	1266	kN
Max. dwarskracht / doorsnede	1257	kN
Maximale optredende afschuiving in de wand	1257	kN
Hoek loodrecht dwarskracht/drukdiagonaal	30	21,8≤Θ≤45
cot Θ	2	hoek
alfa	80	
cot alfa	0.18	
Asw	113	mm2
s	200	mm
z (horende max. dwarskracht)	2527	mm
fywd	478	Mpa
VRD,S	6422	kN
Toetsing afschuiving door dwarskracht	0.20	

Toetsing betonspanning	0.96	Voldoet
Toetsing afschuiving in wand	0.20	Voldoet

Afschuiving in wapening door torsie

Maximaal torsie	1740354	kNmm
Maximaal afschuiving torsie / doorsnede	1717	kN
Maximaal dwarskracht bij torsie	570	kN
Max. afschuiving wand door dwarskracht	570	kN
Hoek loodrecht dwarskracht/drukdiagonaal	30	21,8≤Θ≤45
cot Θ	2	hoek
alfa	80	
cot alfa	0.18	
Asw	113	mm2
s	200	mm
z (dwarskracht)	2527	mm
z (torsie)	6368	mm
fywd	478	Mpa
VRD,max (dwarskracht)	6422	kN
VRD,max (torsie)	16184	kN
Toetsing afschuiving door dwarskracht	0.09	
Toetsing afschuiving door torsie	0.11	
Totaal	0.19	

W4HL350 Bijlage D

Segment	**2**	
Lengte	**7**	**m**
Gewicht	**48.1**	**ton**

Betonklasse	B	Voldoet
Voorspananker	FeP1860	
Nkabel; `toegepast Buiten	16	Voldoet
Nkabel; `toegepast Binnen	8	
Dwarswapening	12	rond
Materiaal	550	Fb550
Aantal ringbeugels/meter hoogte	5	Voldoet

Keuze Betonklasse	A	B	C	D
	C55/67	C70/85	C80/95	C90/105
fck	55	70	80	90
yck	1.5	1.5	1.5	1.5
fcd	-36.7	-46.7	-53.3	-60.0
Trekspanning	0	0	0	0

Optredende spanningen

Segment	2		
Ingevulde wanddikte	450		
	Voet	Top	
Buitendiameter	2524	2247	mm
Buitenomtrek	7930	7059	mm
Wanddikte	450	450	mm
Binnendiameter	1624	1347	mm
Doorsnede	Hol	Hol	
Omtrek/dikte	17.62	15.69	Verhouding
Oppervlak	2932507	2540232	mm2
Weerstandsmoment	1308457682	969796871	mm3
Maximale moment	30470	kNm	
Maximale moment + 2de orde	33517	kNm	
Maximaal dwarskracht	1257	kN	
Maximaal torsiemoment	1740354	kNmm	
Maximaal normaalkracht	2221	kN	
Spanning tgv normaalkracht	0.8	N/mm2	
Spanning tgv moment	25.8	N/mm2	
2de orde effect verrekening	10%		
Factor e.g	1.2		
Maximale drukspanning	-26.6	Mpa	
Toelaatbare spanning	-46.7	Komende uit betonklasse	
Maximale trekspanning	25.3	MPa	
Toelaatbare trekspanning	0.0	MPa	

Voorspanning

Benodigde voorspanning ULS	25.3	Mpa
Benodigde voorspanning SLS	21	Mpa
Benodigde voorspankracht	73782	kN
Resulterende betonspanningen		
Trekzijde	0	Mpa
Drukzijde	-52	Mpa
Na relaxatie	-46	MPa
Keuze voorspankabels	FeP1860	
Toelaatbare spanning	1200	MPa
Astreng	150	mm2
streng/kabel	19	
Akabel	2850	mm2
Benodigde voorspankracht	73782	kN
Nkabel; benodigd	22	
Nkabel; `toegepast Buiten	16	
Nkabel; `toegepast Binnen	8	
Ankerverdeling top		
Gegeven E6-19		
Randafstand ankers	230	mm
Minimale hoh-afstand ankers	300	mm
Anker circel buiten	1787	mm
Anker cirkel binnen	1187	mm
Omtrek ankercirkel buiten	5614	mm
Omtrek ankercirkel binnen	3729	mm
Aantal plaatsbare ankers buitenring	18	
Aantal plaatsbare ankers binnenring	12	

Afschuiving in wapening door dwarskracht **(NEN-EN 1992-1-1 Hfst. 6.2.3)**

Max. dwarskracht in segment	1257	kN
Max. dwarskracht / doorsnede	1251	kN
Maximale optredende afschuiving in de wand	1251	kN
Hoek loodrecht dwarskracht/drukdiagonaal	30	21,8≤Θ≤45
cot Θ	2	hoek
alfa	80	
cot alfa	0.18	
Asw	113	mm2
s	200	mm
z (horende max. dwarskracht)	2219	mm
fywd	478	Mpa
VRD,S	5639	kN
Toetsing afschuiving door dwarskracht	0.22	

Toetsing betonspanning	0.98	Voldoet
Toetsing afschuiving in wand	0.24	Voldoet

Afschuiving in wapening door torsie

Maximaal torsie	1740354	kNmm
Maximaal afschuiving torsie / doorsnede	1943	kN
Maximaal dwarskracht bij torsie	565	kN
Max. afschuiving wand door dwarskracht	565	kN
Hoek loodrecht dwarskracht/drukdiagonaal	30	21,8≤Θ≤45
cot Θ	2	hoek
alfa	80	
cot alfa	0.18	
Asw	113	mm2
s	200	mm
z (dwarskracht)	2219	mm
z (torsie)	5627	mm
fywd	478	Mpa
VRD,max (dwarskracht)	5639	kN
VRD,max (torsie)	14299	kN
Toetsing afschuiving door dwarskracht	0.10	
Toetsing afschuiving door torsie	0.14	
Totaal	0.24	

W4HL350 Bijlage D

Hoogte overgang Beton/Staal	19000	mm

Eigenschappen mast

Type mast	W4HL350
Staalkwaliteit	S355
Toelaatbare spanning	284
Epsilon staal	0.81

Uitgangspunten

Windgebied	II
Bebouwd of onbebouwd	Onbebouwd
2e orde	10%

Afmetingen

Topdiameter	0.80	m
Voetdiameter	2.23	m
Hoogte overgang beton/staal	19.00	m
Hoogte mast	55.50	m
Wanddikte	22	mm
Gewicht	33029	kg

Hoogte

GW / opgw	35.90	m
150C1F1	27.10	m
150C1F2	18.10	m
150C1F3	9.10	m
RTG	0.20	m
380C1F1	27.10	m
380C1F2	18.10	m
380C1F3	9.10	m

Krachten	**hoogte m**	**Fver kN**	**Floodrecht kN**	**F// kN**	**FSamengesteld kN**	**Moment per geleider kN**
GW / opgw	35.9	16.3	61.3	0.0	61.3	2201.6
150C1F1	27.1	25.7	118.4	0.0	118.4	3208.2
150C1F2	18.1	25.7	116.4	0.0	116.4	2106.6
150C1F3	9.1	25.7	113.9	0.0	113.9	1036.6
RTG	0.2	16.3	56.3	-108.0	121.8	24.4
380C1F1	27.1	51.4	236.8	0.0	236.8	6416.4
380C1F2	18.1	51.4	232.8	0.0	232.8	4213.1
380C1F3	9.1	51.4	227.8	0.0	227.8	2073.3

Stuwdruk	614.8	N
Moment overgang Beton/Staal (Inclusief 2e orde)	24085	kNm

Controle spanning ten gevolge van normaalkracht

Plooigevoeligheid normaalkracht			
Reductiefactor normaalkracht	ρa	0.71	
Effectieve oppervlakte	Aeff	108569	mm2
Optredende spanning t.g.v. normaalkracht			

Controle spanning ten gevolge van buigend moment

Buigend moment plooigevoeligheid			
Reductiefactor buigend moment	ρa	1.00	
Effectieve weerstandmoment	Weff	83415742	mm3
Optredende spanning t.g.v. buigend moment			

Controle spanning ten gevolge van normaalkracht en buigend moment

Totaal optredende spanning	279	N/mm2
Unity check	0.98	Voldoet

W4HL400 Bijlage F

Segment	**1**	
Lengte	**12**	**m**
Gewicht	**114.0**	**ton**

Betonklasse	B	Voldoet
Voorspananker	FeP1860	
Nkabel; `toegepast Buiten	20	Voldoet
Nkabel; `toegepast Binnen	12	
Dwarswapening	12	rond
Materiaal	550	Fb550
Aantal ringbeugels/meter hoogte	5	Voldoet

Keuze Betonklasse	A	B	C	D
	C55/67	C70/85	C80/95	C90/105
fck	55	70	80	90
yck	1.5	1.5	1.5	1.5
fcd	-36.7	-46.7	-53.3	-60.0
Trekspanning	0	0	0	0

Optredende spanningen

Segment	1		
Ingevulde wanddikte	500		
	Voet	Top	
Buitendiameter	3200	2744	mm
Buitenomtrek	10053	8621	mm
Wanddikte	500	500	mm
Binnendiameter	2200	1744	mm
Doorsnede	Hol	Hol	
Omtrek/dikte	20.11	17.24	Verhouding
Oppervlak	4241150	3525344	mm2
Weerstandsmoment	2498302470	1697893326	mm3
Maximale moment	54861	kNm	
Maximale moment + 2de orde	60347	kNm	
Maximaal dwarskracht	1325	kN	
Maximaal torsiemoment	1836522	kNmm	
Maximaal normaalkracht	4076	kN	
Spanning tgv normaalkracht	1.0	N/mm2	
Spanning tgv moment	25.3	N/mm2	
2de orde effect verrekening	10%		
Factor e.g	1.2		
Maximale drukspanning	-26.2	Mpa	
Toelaatbare spanning	-46.7	Komende uit betonklasse	
Maximale trekspanning	24.5	MPa	
Toelaatbare trekspanning	0.0	MPa	

Voorspanning

Benodigde voorspanning ULS	24.5	Mpa
Benodigde voorspanning SLS	20	Mpa
Benodigde voorspankracht	99389	kN
Resulterende betonspanningen		
Trekzijde	0	Mpa
Drukzijde	-51	Mpa
Na relaxatie	-45	MPa
Keuze voorspankabels	FeP1860	
Toelaatbare spanning	1200	MPa
Astreng	150	mm2
streng/kabel	19	
Akabel	2850	mm2
Benodigde voorspankracht	99389	kN
Nkabel; benodigd	30	
Nkabel; `toegepast Buiten	20	
Nkabel; `toegepast Binnen	12	
Ankerverdeling top		
Gegeven E6-19		
Randafstand ankers	230	mm
Minimale hoh-afstand ankers	300	mm
Anker circel buiten	2284	mm
Anker cirkel binnen	1684	mm
Omtrek ankercirkel buiten	7176	mm
Omtrek ankercirkel binnen	5291	mm
Aantal plaatsbare ankers buitenring	23	
Aantal plaatsbare ankers binnenring	17	

Afschuiving in wapening door dwarskracht **(NEN-EN 1992-1-1 Hfst. 6.2.3)**

Max. dwarskracht in segment	1325	kN
Max. dwarskracht / doorsnede	1315	kN
Maximale optredende afschuiving in de wand	1315	kN
Hoek loodrecht dwarskracht/drukdiagonaal	30	21,8≤Θ≤45
cot Θ	2	hoek
alfa	80	
cot alfa	0.18	
Asw	113	mm2
s	200	mm
z (horende max. dwarskracht)	2756	mm
fywd	478	Mpa
VRD,S	7004	kN
Toetsing afschuiving door dwarskracht	0.19	

Toetsing betonspanning	0.97	Voldoet
Toetsing afschuiving in wand	0.19	Voldoet

Afschuiving in wapening door torsie

Maximaal torsie	1836522	kNmm
Maximaal afschuiving torsie / doorsnede	1628	kN
Maximaal dwarskracht bij torsie	596	kN
Max. afschuiving wand door dwarskracht	596	kN
Hoek loodrecht dwarskracht/drukdiagonaal	30	21,8≤Θ≤45
cot Θ	2	hoek
alfa	80	
cot alfa	0.18	
Asw	113	mm2
s	200	mm
z (dwarskracht)	2756	mm
z (torsie)	7087	mm
fywd	478	Mpa
VRD,max (dwarskracht)	7004	kN
VRD,max (torsie)	18012	kN
Toetsing afschuiving door dwarskracht	0.09	
Toetsing afschuiving door torsie	0.09	
Totaal	0.18	

W4HL400 Bijlage F

Segment	**2**	
Lengte	**10**	**m**
Gewicht	**85.8**	**ton**

Betonklasse	B	Voldoet
Voorspananker	FeP1860	
Nkabel; `toegepast Buiten	18	Voldoet
Nkabel; `toegepast Binnen	8	
Dwarswapening	12	rond
Materiaal	550	Fb550
Aantal ringbeugels/meter hoogte	5	Voldoet

Keuze Betonklasse	A	B	C	D
	C55/67	C70/85	C80/95	C90/105
fck	55	70	80	90
yck	1.5	1.5	1.5	1.5
fcd	-36.7	-46.7	-53.3	-60.0
Trekspanning	0	0	0	0

Optredende spanningen

Segment	2		
Ingevulde wanddikte	450		
	Voet	Top	
Buitendiameter	2744	2365	mm
Buitenomtrek	8621	7428	mm
Wanddikte	450	450	mm
Binnendiameter	1844	1465	mm
Doorsnede	Hol	Hol	
Omtrek/dikte	19.16	16.51	Verhouding
Oppervlak	3243496	2706641	mm2
Weerstandsmoment	1615165287	1106905528	mm3
Maximale moment	39018	kNm	
Maximale moment + 2de orde	42920	kNm	
Maximaal dwarskracht	1315	kN	
Maximaal torsiemoment	1836522	kNmm	
Maximaal normaalkracht	2734	kN	
Spanning tgv normaalkracht	0.8	N/mm2	
Spanning tgv moment	26.6	N/mm2	
2de orde effect verrekening	10%		
Factor e.g	1.2		
Maximale drukspanning	-27.4	Mpa	
Toelaatbare spanning	-46.7	Komende uit betonklasse	
Maximale trekspanning	26.0	MPa	
Toelaatbare trekspanning	0.0	MPa	

Voorspanning

Benodigde voorspanning ULS	26.0	Mpa
Benodigde voorspanning SLS	21	Mpa
Benodigde voorspankracht	84152	kN
Resulterende betonspanningen		
Trekzijde	0	Mpa
Drukzijde	-53	Mpa
Na relaxatie	-45	MPa
Keuze voorspankabels	FeP1860	
Toelaatbare spanning	1200	MPa
Astreng	150	mm2
streng/kabel	19	
Akabel	2850	mm2
Benodigde voorspankracht	84152	kN
Nkabel; benodigd	25	
Nkabel; `toegepast Buiten	18	
Nkabel; `toegepast Binnen	8	
Ankerverdeling top		
Gegeven E6-19		
Randafstand ankers	230	mm
Minimale hoh-afstand ankers	300	mm
Anker circel buiten	1905	mm
Anker cirkel binnen	1305	mm
Omtrek ankercirkel buiten	5983	mm
Omtrek ankercirkel binnen	4098	mm
Aantal plaatsbare ankers buitenring	19	
Aantal plaatsbare ankers binnenring	13	

Afschuiving in wapening door dwarskracht **(NEN-EN 1992-1-1 Hfst. 6.2.3)**

Max. dwarskracht in segment	1315	kN
Max. dwarskracht / doorsnede	1307	kN
Maximale optredende afschuiving in de wand	1307	kN
Hoek loodrecht dwarskracht/drukdiagonaal	30	21,8≤Θ≤45
cot Θ	2	hoek
alfa	80	
cot alfa	0.18	
Asw	113	mm2
s	200	mm
z (horende max. dwarskracht)	2348	mm
fywd	478	Mpa
VRD,S	5967	kN
Toetsing afschuiving door dwarskracht	0.22	

Toetsing betonspanning	0.97	Voldoet
Toetsing afschuiving in wand	0.22	Voldoet

Afschuiving in wapening door torsie

Maximaal torsie	1836522	kNmm
Maximaal afschuiving torsie / doorsnede	1911	kN
Maximaal dwarskracht bij torsie	592	kN
Max. afschuiving wand door dwarskracht	592	kN
Hoek loodrecht dwarskracht/drukdiagonaal	30	21,8≤Θ≤45
cot Θ	2	hoek
alfa	80	
cot alfa	0.18	
Asw	113	mm2
s	200	mm
z (dwarskracht)	2348	mm
z (torsie)	6038	mm
fywd	478	Mpa
VRD,max (dwarskracht)	5967	kN
VRD,max (torsie)	15345	kN
Toetsing afschuiving door dwarskracht	0.10	
Toetsing afschuiving door torsie	0.12	
Totaal	0.22	

W4HL400

Hoogte overgang Beton/Staal	22000	mm

Eigenschappen mast

Type mast	W4HL400
Staalkwaliteit	S355
Toelaatbare spanning	284
Epsilon staal	0.81

Uitgangspunten

Windgebied	II
Bebouwd of onbebouwd	Onbebouwd
2e orde	10%

Afmetingen

Topdiameter	0.80	m
Voetdiameter	2.36	m
Hoogte overgang beton/staal	22.00	m
Hoogte mast	63.20	m
Wanddikte	24	mm
Gewicht	39257	kg

Hoogte

GW / opgw	40.60	m
150C1F1	30.60	m
150C1F2	20.40	m
150C1F3	10.20	m
RTG	0.10	m
380C1F1	30.60	m
380C1F2	20.40	m
380C1F3	10.20	m

Krachten	**hoogte m**	**Fver kN**	**Floodrecht kN**	**F// kN**	**FSamengesteld kN**	**Moment per geleider kN**
GW / opgw	40.6	18.7	65.3	0.0	65.3	2652.1
150C1F1	30.6	29.4	123.2	0.0	123.2	3770.6
150C1F2	20.4	29.4	120.9	0.0	120.9	2466.6
150C1F3	10.2	29.4	118.1	0.0	118.1	1204.4
RTG	0.1	18.7	59.5	-112.8	127.5	12.8
380C1F1	30.6	58.8	246.4	0.0	246.4	7541.2
380C1F2	20.4	58.8	241.8	0.0	241.8	4933.2
380C1F3	10.2	58.8	236.2	0.0	236.2	2408.8

Stuwdruk		856.4	N
Moment overgang Beton/Staal (Inclusief 2e orde)		28431	kNm

Controle spanning ten gevolge van normaalkracht

Plooigevoeligheid normaalkracht			
Reductiefactor normaalkracht	ρa	0.72	
Effectieve oppervlakte	Aeff	127538	mm2
Optredende spanning t.g.v. normaalkracht			

Controle spanning ten gevolge van buigend moment

Buigend moment plooigevoeligheid			
Reductiefactor buigend moment	ρa	1.00	
Effectieve weerstandmoment	Weff	101824779	mm3
Optredende spanning t.g.v. buigend moment			

Controle spanning ten gevolge van normaalkracht en buigend moment

Totaal optredende spanning	275	N/mm2
Unity check	0.97	Voldoet

W4S350 Bijlage C

Segment	**1**	
Lengte	**12**	**m**
Gewicht	**67.5**	**ton**

Betonklasse	A	Voldoet
Voorspananker	FeP1860	
Nkabel; `toegepast Buiten	12	Voldoet
Nkabel; `toegepast Binnen	4	
Dwarswapening	12	rond
Materiaal	550	Fb550
Aantal ringbeugels/meter hoogte	5	Voldoet

Keuze Betonklasse	A	B	C	D
	C55/67	C70/85	C80/95	C90/105
fck	55	70	80	90
yck	1.5	1.5	1.5	1.5
fcd	-36.7	-46.7	-53.3	-60.0
Trekspanning	0	0	0	0

Optredende spanningen

Segment	1		
Ingevulde wanddikte	450		
	Voet	Top	
Buitendiameter	2200	1898	mm
Buitenomtrek	6912	5962	mm
Wanddikte	450	450	mm
Binnendiameter	1300	998	mm
Doorsnede	Hol	Hol	
Omtrek/dikte	15.36	13.25	Verhouding
Oppervlak	2474004	2046838	mm2
Weerstandsmoment	917911791	619804059	mm3
Maximale moment	15811	kNm	
Maximale moment + 2de orde	17392	kNm	
Maximaal dwarskracht	452	kN	
Maximaal torsiemoment	0	kNmm	
Maximaal normaalkracht	2253	kN	
Spanning tgv normaalkracht	0.9	N/mm2	
Spanning tgv moment	19.0	N/mm2	
2de orde effect verrekening	10%		
Factor e.g	1.2		
Maximale drukspanning	-19.9	Mpa	
Toelaatbare spanning	-36.7	Komende uit betonklasse	
Maximale trekspanning	18.3	MPa	
Toelaatbare trekspanning	0.0	MPa	

Voorspanning

Benodigde voorspanning ULS	18.3	Mpa
Benodigde voorspanning SLS	13	Mpa
Benodigde voorspankracht	45185	kN
Resulterende betonspanningen		
Trekzijde	0	Mpa
Drukzijde	-38	Mpa
Na relaxatie	-35	MPa
Keuze voorspankabels	FeP1860	
Toelaatbare spanning	1200	MPa
Astreng	150	mm2
streng/kabel	19	
Akabel	2850	mm2
Benodigde voorspankracht	45185	kN
Nkabel; benodigd	14	
Nkabel; `toegepast Buiten	12	
Nkabel; `toegepast Binnen	4	
Ankerverdeling top		
Gegeven E6-19		
Randafstand ankers	230	mm
Minimale hoh-afstand ankers	300	mm
Anker circel buiten	1438	mm
Anker cirkel binnen	838	mm
Omtrek ankercirkel buiten	4517	mm
Omtrek ankercirkel binnen	2632	mm
Aantal plaatsbare ankers buitenring	15	
Aantal plaatsbare ankers binnenring	8	

Afschuiving in wapening door dwarskracht **(NEN-EN 1992-1-1 Hfst. 6.2.3)**

Max. dwarskracht in segment	452	kN
Max. dwarskracht / doorsnede	430	kN
Maximale optredende afschuiving in de wand	430	kN
Hoek loodrecht dwarskracht/drukdiagonaal	30	21,8≤Θ≤45
cot Θ	2	hoek
alfa	80	
cot alfa	0.18	
Asw	113	mm2
s	200	mm
z (horende max. dwarskracht)	1899	mm
fywd	478	Mpa
VRD,S	4826	kN
Toetsing afschuiving door dwarskracht	0.09	

Toetsing betonspanning	0.95	Voldoet
Toetsing afschuiving in wand	0.09	Voldoet

Afschuiving in wapening door torsie

Maximaal torsie	0	kNmm
Maximaal afschuiving torsie / doorsnede	0	kN
Maximaal dwarskracht bij torsie	0	kN
Max. afschuiving wand door dwarskracht	0	kN
Hoek loodrecht dwarskracht/drukdiagonaal	30	21,8≤Θ≤45
cot Θ	2	hoek
alfa	80	
cot alfa	0.18	
Asw	113	mm2
s	200	mm
z (dwarskracht)	1899	mm
z (torsie)	1100	mm
fywd	478	Mpa
VRD,max (dwarskracht)	4826	kN
VRD,max (torsie)	2794	kN
Toetsing afschuiving door dwarskracht	0.00	
Toetsing afschuiving door torsie	0.00	
Totaal	0.00	

W4S350 Bijlage C

Segment	**2**	
Lengte	**7**	**m**
Gewicht	**31.2**	**ton**

Betonklasse	A	Voldoet
Voorspananker	FeP1860	
Nkabel; `toegepast Buiten	8	Voldoet
Nkabel; `toegepast Binnen	4	
Dwarswapening	12	rond
Materiaal	550	Fb550
Aantal ringbeugels/meter hoogte	5	Voldoet

Keuze Betonklasse	A	B	C	D
	C55/67	C70/85	C80/95	C90/105
fck	55	70	80	90
yck	1.5	1.5	1.5	1.5
fcd	-36.7	-46.7	-53.3	-60.0
Trekspanning	0	0	0	0

Optredende spanningen

Segment	2		
Ingevulde wanddikte	400		
	Voet	Top	
Buitendiameter	1898	1722	mm
Buitenomtrek	5962	5409	mm
Wanddikte	400	400	mm
Binnendiameter	1098	922	mm
Doorsnede	Hol	Hol	
Omtrek/dikte	14.91	13.52	Verhouding
Oppervlak	1882243	1660750	mm2
Weerstandsmoment	595943826	459802760	mm3
Maximale moment	10437	kNm	
Maximale moment + 2de orde	11481	kNm	
Maximaal dwarskracht	429	kN	
Maximaal torsiemoment	0	kNmm	
Maximaal normaalkracht	1459	kN	
Spanning tgv normaalkracht	0.8	N/mm2	
Spanning tgv moment	19.4	N/mm2	
2de orde effect verrekening	10%		
Factor e.g	1.2		
Maximale drukspanning	-20.2	Mpa	
Toelaatbare spanning	-36.7	Komende uit betonklasse	
Maximale trekspanning	18.8	MPa	
Toelaatbare trekspanning	0.0	MPa	

Voorspanning

Benodigde voorspanning ULS	18.8	Mpa
Benodigde voorspanning SLS	13	Mpa
Benodigde voorspankracht	35319	kN
Resulterende betonspanningen		
Trekzijde	0	Mpa
Drukzijde	-39	Mpa
Na relaxatie	-35	MPa
Keuze voorspankabels	FeP1860	
Toelaatbare spanning	1200	MPa
Astreng	150	mm2
streng/kabel	19	
Akabel	2850	mm2
Benodigde voorspankracht	35319	kN
Nkabel; benodigd	11	
Nkabel; `toegepast Buiten	8	
Nkabel; `toegepast Binnen	4	
Ankerverdeling top		
Gegeven E6-19		
Randafstand ankers	230	mm
Minimale hoh-afstand ankers	300	mm
Anker circel buiten	1262	mm
Anker cirkel binnen	662	mm
Omtrek ankercirkel buiten	3963	mm
Omtrek ankercirkel binnen	2078	mm
Aantal plaatsbare ankers buitenring	13	
Aantal plaatsbare ankers binnenring	6	

Afschuiving in wapening door dwarskracht **(NEN-EN 1992-1-1 Hfst. 6.2.3)**

Max. dwarskracht in segment	429	kN
Max. dwarskracht / doorsnede	388	kN
Maximale optredende afschuiving in de wand	388	kN
Hoek loodrecht dwarskracht/drukdiagonaal	30	21,8≤Θ≤45
cot Θ	2	hoek
alfa	80	
cot alfa	0.18	
Asw	113	mm2
s	200	mm
z (horende max. dwarskracht)	1591	mm
fywd	478	Mpa
VRD,S	4043	kN
Toetsing afschuiving door dwarskracht	0.10	

Toetsing betonspanning	0.96	Voldoet
Toetsing afschuiving in wand	0.10	Voldoet

Afschuiving in wapening door torsie

Maximaal torsie	0	kNmm
Maximaal afschuiving torsie / doorsnede	0	kN
Maximaal dwarskracht bij torsie	0	kN
Max. afschuiving wand door dwarskracht	0	kN
Hoek loodrecht dwarskracht/drukdiagonaal	30	21,8≤Θ≤45
cot Θ	2	hoek
alfa	80	
cot alfa	0.18	
Asw	113	mm2
s	200	mm
z (dwarskracht)	1591	mm
z (torsie)	1257	mm
fywd	478	Mpa
VRD,max (dwarskracht)	4043	kN
VRD,max (torsie)	3194	kN
Toetsing afschuiving door dwarskracht	0.00	
Toetsing afschuiving door torsie	0.00	
Totaal	0.00	

W4S350 Bijlage C

Hoogte overgang Beton/Staal	19000	mm

Eigenschappen mast

Type mast	W4S350
Staalkwaliteit	S355
Toelaatbare spanning	284
Epsilon staal	0.81

Uitgangspunten

Windgebied	II
Bebouwd of onbebouwd	Onbebouwd
2e orde	10%

Afmetingen

Topdiameter	0.80	m
Voetdiameter	1.71	m
Hoogte overgang beton/staal	19.00	m
Hoogte mast	55.60	m
Wanddikte	14	mm
Gewicht	25517	kg

Hoogte

GW / opgw	35.90	m
150C1F1	27.10	m
150C1F2	18.10	m
150C1F3	9.10	m
RTG	0.20	m
380C1F1	27.10	m
380C1F2	18.10	m
380C1F3	9.10	m

Krachten	**hoogte m**	**Fver kN**	**Floodrecht kN**	**F// kN**	**FSamengesteld kN**	**Moment per geleider kN**
GW / opgw	35.9	4.0	13.5	0.0	13.5	483.9
150C1F1	27.1	14.9	38.6	0.0	38.6	1046.6
150C1F2	18.1	14.9	36.0	0.0	36.0	651.3
150C1F3	9.1	14.9	32.6	0.0	32.6	296.6
RTG	0.2	8.1	18.2	0.0	18.2	3.6
380C1F1	27.1	29.8	77.2	0.0	77.2	2093.2
380C1F2	18.1	29.8	72.0	0.0	72.0	1302.6
380C1F3	9.1	29.8	65.2	0.0	65.2	593.3

Stuwdruk	1728.3	N
Moment overgang Beton/Staal (Inclusief 2e orde)	9019	kNm

Controle spanning ten gevolge van normaalkracht

Plooigevoeligheid normaalkracht			
Reductiefactor normaalkracht	ρa	0.64	
Effectieve oppervlakte	Aeff	47847	mm2
Optredende spanning t.g.v. normaalkracht			

Controle spanning ten gevolge van buigend moment

Buigend moment plooigevoeligheid			
Reductiefactor buigend moment	ρa	0.94	
Effectieve weerstandmoment	Weff	29533894	mm3
Optredende spanning t.g.v. buigend moment			

Controle spanning ten gevolge van normaalkracht en buigend moment

Totaal optredende spanning	278	N/mm2
Unity check	0.98	Voldoet

W4S400 Bijlage E

Segment	**1**	
Lengte	**12**	**m**
Gewicht	**80.8**	**ton**

Betonklasse	A	Voldoet
Voorspananker	FeP1860	
Nkabel; `toegepast Buiten	12	Voldoet
Nkabel; `toegepast Binnen	8	
Dwarswapening	12	rond
Materiaal	550	Fb550
Aantal ringbeugels/meter hoogte	5	Voldoet

Keuze Betonklasse	A	B	C	D
	C55/67	C70/85	C80/95	C90/105
fck	55	70	80	90
yck	1.5	1.5	1.5	1.5
fcd	-36.7	-46.7	-53.3	-60.0
Trekspanning	0	0	0	0

Optredende spanningen

Segment	1		
Ingevulde wanddikte	500		
	Voet	Top	
Buitendiameter	2400	2097	mm
Buitenomtrek	7540	6587	mm
Wanddikte	500	500	mm
Binnendiameter	1400	1097	mm
Doorsnede	Hol	Hol	
Omtrek/dikte	15.08	13.17	Verhouding
Oppervlak	2984513	2508063	mm2
Weerstandsmoment	1200022944	837162843	mm3
Maximale moment	20789	kNm	
Maximale moment + 2de orde	22868	kNm	
Maximaal dwarskracht	523	kN	
Maximaal torsiemoment	0	kNmm	
Maximaal normaalkracht	2974	kN	
Spanning tgv normaalkracht	1.0	N/mm2	
Spanning tgv moment	19.3	N/mm2	
2de orde effect verrekening	10%		
Factor e.g	1.2		
Maximale drukspanning	-20.3	Mpa	
Toelaatbare spanning	-36.7	Komende uit betonklasse	
Maximale trekspanning	18.6	MPa	
Toelaatbare trekspanning	0.0	MPa	

Voorspanning

Benodigde voorspanning ULS	18.6	Mpa
Benodigde voorspanning SLS	13	Mpa
Benodigde voorspankracht	54643	kN
Resulterende betonspanningen		
Trekzijde	0	Mpa
Drukzijde	-39	Mpa
Na relaxatie	-35	MPa
Keuze voorspankabels	FeP1860	
Toelaatbare spanning	1200	MPa
Astreng	150	mm2
streng/kabel	19	
Akabel	2850	mm2
Benodigde voorspankracht	54643	kN
Nkabel; benodigd	16	
Nkabel; `toegepast Buiten	12	
Nkabel; `toegepast Binnen	8	
Ankerverdeling top		
Gegeven E6-19		
Randafstand ankers	230	mm
Minimale hoh-afstand ankers	300	mm
Anker circel buiten	1637	mm
Anker cirkel binnen	1037	mm
Omtrek ankercirkel buiten	5142	mm
Omtrek ankercirkel binnen	3257	mm
Aantal plaatsbare ankers buitenring	17	
Aantal plaatsbare ankers binnenring	10	

Afschuiving in wapening door dwarskracht **(NEN-EN 1992-1-1 Hfst. 6.2.3)**

Max. dwarskracht in segment	523	kN
Max. dwarskracht / doorsnede	499	kN
Maximale optredende afschuiving in de wand	499	kN
Hoek loodrecht dwarskracht/drukdiagonaal	30	21,8≤Θ≤45
cot Θ	2	hoek
alfa	80	
cot alfa	0.18	
Asw	113	mm2
s	200	mm
z (horende max. dwarskracht)	2104	mm
fywd	478	Mpa
VRD,S	5347	kN
Toetsing afschuiving door dwarskracht	0.09	

Toetsing betonspanning	0.96	Voldoet
Toetsing afschuiving in wand	0.09	Voldoet

Afschuiving in wapening door torsie

Maximaal torsie	0	kNmm
Maximaal afschuiving torsie / doorsnede	0	kN
Maximaal dwarskracht bij torsie	0	kN
Max. afschuiving wand door dwarskracht	0	kN
Hoek loodrecht dwarskracht/drukdiagonaal	30	21,8≤Θ≤45
cot Θ	2	hoek
alfa	80	
cot alfa	0.18	
Asw	113	mm2
s	200	mm
z (dwarskracht)	2104	mm
z (torsie)	942	mm
fywd	478	Mpa
VRD,max (dwarskracht)	5347	kN
VRD,max (torsie)	2395	kN
Toetsing afschuiving door dwarskracht	0.00	
Toetsing afschuiving door torsie	0.00	
Totaal	0.00	

W4S400 Bijlage E

Segment	**2**	
Lengte	**10**	**m**
Gewicht	**53.3**	**ton**

Betonklasse	A	Voldoet
Voorspananker	FeP1860	
Nkabel; `toegepast Buiten	10	Voldoet
Nkabel; `toegepast Binnen	6	
Dwarswapening	12	rond
Materiaal	550	Fb550
Aantal ringbeugels/meter hoogte	5	Voldoet

Keuze Betonklasse	A	B	C	D
	C55/67	C70/85	C80/95	C90/105
fck	55	70	80	90
yck	1.5	1.5	1.5	1.5
fcd	-36.7	-46.7	-53.3	-60.0
Trekspanning	0	0	0	0

Optredende spanningen

Segment	2		
Ingevulde wanddikte	450		
	Voet	Top	
Buitendiameter	2097	1844	mm
Buitenomtrek	6587	5793	mm
Wanddikte	450	450	mm
Binnendiameter	1197	944	mm
Doorsnede	Hol	Hol	
Omtrek/dikte	14.64	12.87	Verhouding
Oppervlak	2327942	1970605	mm2
Weerstandsmoment	808869668	573228715	mm3
Maximale moment	14662	kNm	
Maximale moment + 2de orde	16128	kNm	
Maximaal dwarskracht	498	kN	
Maximaal torsiemoment	0	kNmm	
Maximaal normaalkracht	2023	kN	
Spanning tgv normaalkracht	0.9	N/mm2	
Spanning tgv moment	20.0	N/mm2	
2de orde effect verrekening	10%		
Factor e.g	1.2		
Maximale drukspanning	-20.8	Mpa	
Toelaatbare spanning	-36.7	Komende uit betonklasse	
Maximale trekspanning	19.3	MPa	
Toelaatbare trekspanning	0.0	MPa	

Voorspanning

Benodigde voorspanning ULS	19.3	Mpa
Benodigde voorspanning SLS	13	Mpa
Benodigde voorspankracht	44921	kN
Resulterende betonspanningen		
Trekzijde	0	Mpa
Drukzijde	-40	Mpa
Na relaxatie	-36	MPa
Keuze voorspankabels	FeP1860	
Toelaatbare spanning	1200	MPa
Astreng	150	mm2
streng/kabel	19	
Akabel	2850	mm2
Benodigde voorspankracht	44921	kN
Nkabel; benodigd	14	
Nkabel; `toegepast Buiten	10	
Nkabel; `toegepast Binnen	6	
Ankerverdeling top		
Gegeven E6-19		
Randafstand ankers	230	mm
Minimale hoh-afstand ankers	300	mm
Anker circel buiten	1384	mm
Anker cirkel binnen	784	mm
Omtrek ankercirkel buiten	4348	mm
Omtrek ankercirkel binnen	2463	mm
Aantal plaatsbare ankers buitenring	14	
Aantal plaatsbare ankers binnenring	8	

Afschuiving in wapening door dwarskracht **(NEN-EN 1992-1-1 Hfst. 6.2.3)**

Max. dwarskracht in segment	498	kN
Max. dwarskracht / doorsnede	477	kN
Maximale optredende afschuiving in de wand	477	kN
Hoek loodrecht dwarskracht/drukdiagonaal	30	21,8≤Θ≤45
cot Θ	2	hoek
alfa	80	
cot alfa	0.18	
Asw	113	mm2
s	200	mm
z (horende max. dwarskracht)	1832	mm
fywd	478	Mpa
VRD,S	4656	kN
Toetsing afschuiving door dwarskracht	0.10	

Toetsing betonspanning	0.98	Voldoet
Toetsing afschuiving in wand	0.10	Voldoet

Afschuiving in wapening door torsie

Maximaal torsie	0	kNmm
Maximaal afschuiving torsie / doorsnede	0	kN
Maximaal dwarskracht bij torsie	0	kN
Max. afschuiving wand door dwarskracht	0	kN
Hoek loodrecht dwarskracht/drukdiagonaal	30	21,8≤Θ≤45
cot Θ	2	hoek
alfa	80	
cot alfa	0.18	
Asw	113	mm2
s	200	mm
z (dwarskracht)	1832	mm
z (torsie)	1100	mm
fywd	478	Mpa
VRD,max (dwarskracht)	4656	kN
VRD,max (torsie)	2794	kN
Toetsing afschuiving door dwarskracht	0.00	
Toetsing afschuiving door torsie	0.00	
Totaal	0.00	

W4S400 Bijlage E

Hoogte overgang Beton/Staal	22000	mm

Eigenschappen mast

Type mast	W4S400	
Staalkwaliteit	S355	
Toelaatbare spanning	284	
Epsilon staal	0.81	

Uitgangspunten

Windgebied	II	
Bebouwd of onbebouwd	Onbebouwd	
2e orde	10%	

Afmetingen

Topdiameter	0.80	m
Voetdiameter	1.84	m
Hoogte overgang beton/staal	22.00	m
Hoogte mast	63.30	m
Wanddikte	16	mm
Gewicht	36972	kg

Hoogte

GW / opgw	40.60	m
150C1F1	30.60	m
150C1F2	20.40	m
150C1F3	10.20	m
RTG	0.10	m
380C1F1	30.60	m
380C1F2	20.40	m
380C1F3	10.20	m

Krachten	hoogte m	Fver kN	Floodrecht kN	F// kN	FSamengesteld kN	Moment per geleider kN
GW / opgw	40.6	4.6	15.3	0.0	15.3	622.4
150C1F1	30.6	17.1	43.9	0.0	43.9	1341.9
150C1F2	20.4	17.1	40.8	0.0	40.8	831.8
150C1F3	10.2	17.1	36.8	0.0	36.8	375.8
RTG	0.1	9.2	20.5	0.0	20.5	2.1
380C1F1	30.6	34.1	87.7	0.0	87.7	2683.7
380C1F2	20.4	34.1	81.5	0.0	81.5	1663.6
380C1F3	10.2	34.1	73.7	0.0	73.7	751.7

Stuwdruk		2425.1	N
Moment overgang Beton/Staal (Inclusief 2e orde)		11768	kNm

Controle spanning ten gevolge van normaalkracht

Plooigevoeligheid normaalkracht			
Reductiefactor normaalkracht	ρa	0.66	
Effectieve oppervlakte	Aeff	60754	mm2
Optredende spanning t.g.v. normaalkracht			

Controle spanning ten gevolge van buigend moment

Buigend moment plooigevoeligheid			
Reductiefactor buigend moment	ρa	0.96	
Effectieve weerstandmoment	Weff	39899396	mm3
Optredende spanning t.g.v. buigend moment			

Controle spanning ten gevolge van normaalkracht en buigend moment

Totaal optredende spanning	272	N/mm2
Unity check	0.96	Voldoet

W4S450 Bijlage G

Segment	**1**	
Lengte	**12**	**m**
Gewicht	**99.0**	**ton**

Betonklasse	A	Voldoet
Voorspananker	FeP1860	
Nkabel; `toegepast Buiten	12	Voldoet
Nkabel; `toegepast Binnen	8	
Dwarswapening	12	rond
Materiaal	550	Fb550
Aantal ringbeugels/meter hoogte	5	Voldoet

Keuze Betonklasse	A	B	C	D
	C55/67	C70/85	C80/95	C90/105
fck	55	70	80	90
yck	1.5	1.5	1.5	1.5
fcd	-36.7	-46.7	-53.3	-60.0
Trekspanning	0	0	0	0

Optredende spanningen

Segment	1		
Ingevulde wanddikte	500		
	Voet	Top	
Buitendiameter	2800	2463	mm
Buitenomtrek	8796	7737	mm
Wanddikte	500	500	mm
Binnendiameter	1800	1463	mm
Doorsnede	Hol	Hol	
Omtrek/dikte	17.59	15.47	Verhouding
Oppervlak	3612832	3083350	mm2
Weerstandsmoment	1787061321	1284162939	mm3
Maximale moment	26979	kNm	
Maximale moment + 2de orde	29677	kNm	
Maximaal dwarskracht	606	kN	
Maximaal torsiemoment	0	kNmm	
Maximaal normaalkracht	3738	kN	
Spanning tgv normaalkracht	1.0	N/mm2	
Spanning tgv moment	17.0	N/mm2	
2de orde effect verrekening	10%		
Factor e.g	1.2		
Maximale drukspanning	-18.1	Mpa	
Toelaatbare spanning	-36.7	Komende uit betonklasse	
Maximale trekspanning	16.3	MPa	
Toelaatbare trekspanning	0.0	MPa	

Voorspanning

Benodigde voorspanning ULS	16.3	Mpa
Benodigde voorspanning SLS	11	Mpa
Benodigde voorspankracht	57194	kN
Resulterende betonspanningen		
Trekzijde	0	Mpa
Drukzijde	-34	Mpa
Na relaxatie	-32	MPa
Keuze voorspankabels	FeP1860	
Toelaatbare spanning	1200	MPa
Astreng	150	mm2
streng/kabel	19	
Akabel	2850	mm2
Benodigde voorspankracht	57194	kN
Nkabel; benodigd	17	
Nkabel; `toegepast Buiten	12	
Nkabel; `toegepast Binnen	8	
Ankerverdeling top		
Gegeven E6-19		
Randafstand ankers	230	mm
Minimale hoh-afstand ankers	300	mm
Anker circel buiten	2003	mm
Anker cirkel binnen	1403	mm
Omtrek ankercirkel buiten	6292	mm
Omtrek ankercirkel binnen	4407	mm
Aantal plaatsbare ankers buitenring	20	
Aantal plaatsbare ankers binnenring	14	

Afschuiving in wapening door dwarskracht **(NEN-EN 1992-1-1 Hfst. 6.2.3)**

Max. dwarskracht in segment	606	kN
Max. dwarskracht / doorsnede	578	kN
Maximale optredende afschuiving in de wand	578	kN
Hoek loodrecht dwarskracht/drukdiagonaal	30	21,8≤Θ≤45
cot Θ	2	hoek
alfa	80	
cot alfa	0.18	
Asw	113	mm2
s	200	mm
z (horende max. dwarskracht)	2470	mm
fywd	478	Mpa
VRD,S	6277	kN
Toetsing afschuiving door dwarskracht	0.09	

Toetsing betonspanning	0.86	Voldoet
Toetsing afschuiving in wand	0.09	Voldoet

Afschuiving in wapening door torsie

Maximaal torsie	0	kNmm
Maximaal afschuiving torsie / doorsnede	0	kN
Maximaal dwarskracht bij torsie	0	kN
Max. afschuiving wand door dwarskracht	0	kN
Hoek loodrecht dwarskracht/drukdiagonaal	30	21,8≤Θ≤45
cot Θ	2	hoek
alfa	80	
cot alfa	0.18	
Asw	113	mm2
s	200	mm
z (dwarskracht)	2470	mm
z (torsie)	942	mm
fywd	478	Mpa
VRD,max (dwarskracht)	6277	kN
VRD,max (torsie)	2395	kN
Toetsing afschuiving door dwarskracht	0.00	
Toetsing afschuiving door torsie	0.00	
Totaal	0.00	

W4S450 Bijlage G

Segment	**2**	
Lengte	**7**	**m**
Gewicht	**46.9**	**ton**

Betonklasse	A	Voldoet
Voorspananker	FeP1860	
Nkabel; `toegepast Buiten	10	Voldoet
Nkabel; `toegepast Binnen	6	
Dwarswapening	12	rond
Materiaal	550	Fb550
Aantal ringbeugels/meter hoogte	5	Voldoet

Keuze Betonklasse	A	B	C	D
	C55/67	C70/85	C80/95	C90/105
fck	55	70	80	90
yck	1.5	1.5	1.5	1.5
fcd	-36.7	-46.7	-53.3	-60.0
Trekspanning	0	0	0	0

Optredende spanningen

Segment	2		
Ingevulde wanddikte	450		
	Voet	Top	
Buitendiameter	2463	2266	mm
Buitenomtrek	7737	7120	mm
Wanddikte	450	450	mm
Binnendiameter	1563	1366	mm
Doorsnede	Hol	Hol	
Omtrek/dikte	17.19	15.82	Verhouding
Oppervlak	2845701	2567723	mm2
Weerstandsmoment	1228887464	991781622	mm3
Maximale moment	19840	kNm	
Maximale moment + 2de orde	21824	kNm	
Maximaal dwarskracht	576	kN	
Maximaal torsiemoment	0	kNmm	
Maximaal normaalkracht	2573	kN	
Spanning tgv normaalkracht	0.9	N/mm2	
Spanning tgv moment	17.8	N/mm2	
2de orde effect verrekening	10%		
Factor e.g	1.2		
Maximale drukspanning	-18.7	Mpa	
Toelaatbare spanning	-36.7	Komende uit betonklasse	
Maximale trekspanning	17.1	MPa	
Toelaatbare trekspanning	0.0	MPa	

Voorspanning

Benodigde voorspanning ULS	17.1	Mpa
Benodigde voorspanning SLS	12	Mpa
Benodigde voorspankracht	48687	kN
Resulterende betonspanningen		
Trekzijde	0	Mpa
Drukzijde	-36	Mpa
Na relaxatie	-33	MPa
Keuze voorspankabels	FeP1860	
Toelaatbare spanning	1200	MPa
Astreng	150	mm2
streng/kabel	19	
Akabel	2850	mm2
Benodigde voorspankracht	48687	kN
Nkabel; benodigd	15	
Nkabel; `toegepast Buiten	10	
Nkabel; `toegepast Binnen	6	
Ankerverdeling top		
Gegeven E6-19		
Randafstand ankers	230	mm
Minimale hoh-afstand ankers	300	mm
Anker circel buiten	1806	mm
Anker cirkel binnen	1206	mm
Omtrek ankercirkel buiten	5675	mm
Omtrek ankercirkel binnen	3790	mm
Aantal plaatsbare ankers buitenring	18	
Aantal plaatsbare ankers binnenring	12	

Afschuiving in wapening door dwarskracht **(NEN-EN 1992-1-1 Hfst. 6.2.3)**

Max. dwarskracht in segment	576	kN
Max. dwarskracht / doorsnede	561	kN
Maximale optredende afschuiving in de wand	561	kN
Hoek loodrecht dwarskracht/drukdiagonaal	30	21,8≤Θ≤45
cot Θ	2	hoek
alfa	80	
cot alfa	0.18	
Asw	113	mm2
s	200	mm
z (horende max. dwarskracht)	2270	mm
fywd	478	Mpa
VRD,S	5769	kN
Toetsing afschuiving door dwarskracht	0.10	

Toetsing betonspanning	0.90	Voldoet
Toetsing afschuiving in wand	0.10	Voldoet

Afschuiving in wapening door torsie

Maximaal torsie	0	kNmm
Maximaal afschuiving torsie / doorsnede	0	kN
Maximaal dwarskracht bij torsie	0	kN
Max. afschuiving wand door dwarskracht	0	kN
Hoek loodrecht dwarskracht/drukdiagonaal	30	21,8≤Θ≤45
cot Θ	2	hoek
alfa	80	
cot alfa	0.18	
Asw	113	mm2
s	200	mm
z (dwarskracht)	2270	mm
z (torsie)	1100	mm
fywd	478	Mpa
VRD,max (dwarskracht)	5769	kN
VRD,max (torsie)	2794	kN
Toetsing afschuiving door dwarskracht	0.00	
Toetsing afschuiving door torsie	0.00	
Totaal	0.00	

W4S450 Bijlage G

Segment	**3**	
Lengte	**6**	**m**
Gewicht	**34.9**	**ton**

Betonklasse	A	Voldoet
Voorspananker	FeP1860	
Nkabel; `toegepast Buiten	10	Voldoet
Nkabel; `toegepast Binnen	4	
Dwarswapening	12	rond
Materiaal	550	Fb550
Aantal ringbeugels/meter hoogte	5	Voldoet

Keuze Betonklasse	A	B	C	D
	C55/67	C70/85	C80/95	C90/105
fck	55	70	80	90
yck	1.5	1.5	1.5	1.5
fcd	-36.7	-46.7	-53.3	-60.0
Trekspanning	0	0	0	0

Optredende spanningen

Segment	3		
Ingevulde wanddikte	400		
	Voet	Top	
Buitendiameter	2266	2098	mm
Buitenomtrek	7120	6590	mm
Wanddikte	400	400	mm
Binnendiameter	1466	1298	mm
Doorsnede	Hol	Hol	
Omtrek/dikte	17.80	16.48	Verhouding
Oppervlak	2345252	2133459	mm2
Weerstandsmoment	942493365	773537332	mm3
Maximale moment	15803	kNm	
Maximale moment + 2de orde	17384	kNm	
Maximaal dwarskracht	559	kN	
Maximaal torsiemoment	0	kNmm	
Maximaal normaalkracht	2020	kN	
Spanning tgv normaalkracht	0.9	N/mm2	
Spanning tgv moment	18.6	N/mm2	
2de orde effect verrekening	10%		
Factor e.g	1.2		
Maximale drukspanning	-19.4	Mpa	
Toelaatbare spanning	-36.7	Komende uit betonklasse	
Maximale trekspanning	17.9	MPa	
Toelaatbare trekspanning	0.0	MPa	

Voorspanning

Benodigde voorspanning ULS	17.9	Mpa
Benodigde voorspanning SLS	12	Mpa
Benodigde voorspankracht	41901	kN
Resulterende betonspanningen		
Trekzijde	0	Mpa
Drukzijde	-37	Mpa
Na relaxatie	-34	MPa
Keuze voorspankabels	FeP1860	
Toelaatbare spanning	1200	MPa
Astreng	150	mm2
streng/kabel	19	
Akabel	2850	mm2
Benodigde voorspankracht	41901	kN
Nkabel; benodigd	13	
Nkabel; `toegepast Buiten	10	
Nkabel; `toegepast Binnen	4	

Ankerverdeling top

Gegeven E6-19		
Randafstand ankers	230	mm
Minimale hoh-afstand ankers	300	mm
Anker circel buiten	1638	mm
Anker cirkel binnen	1038	mm
Omtrek ankercirkel buiten	5145	mm
Omtrek ankercirkel binnen	3260	mm
Aantal plaatsbare ankers buitenring	17	
Aantal plaatsbare ankers binnenring	10	

Afschuiving in wapening door dwarskracht **(NEN-EN 1992-1-1 Hfst. 6.2.3)**

Max. dwarskracht in segment	559	kN
Max. dwarskracht / doorsnede	495	kN
Maximale optredende afschuiving in de wand	495	kN
Hoek loodrecht dwarskracht/drukdiagonaal	30	21,8≤Θ≤45
cot Θ	2	hoek
alfa	80	
cot alfa	0.18	
Asw	113	mm2
s	200	mm
z (horende max. dwarskracht)	1790	mm
fywd	478	Mpa
VRD,S	4549	kN
Toetsing afschuiving door dwarskracht	0.11	

Toetsing betonspanning	0.93	Voldoet
Toetsing afschuiving in wand	0.11	Voldoet

Afschuiving in wapening door torsie

Maximaal torsie	0	kNmm
Maximaal afschuiving torsie / doorsnede	0	kN
Maximaal dwarskracht bij torsie	0	kN
Max. afschuiving wand door dwarskracht	0	kN
Hoek loodrecht dwarskracht/drukdiagonaal	30	21,8≤Θ≤45
cot Θ	2	hoek
alfa	80	
cot alfa	0.18	
Asw	113	mm2
s	200	mm
z (dwarskracht)	1790	mm
z (torsie)	1257	mm
fywd	478	Mpa
VRD,max (dwarskracht)	4549	kN
VRD,max (torsie)	3194	kN
Toetsing afschuiving door dwarskracht	0.00	
Toetsing afschuiving door torsie	0.00	
Totaal	0.00	

W4S450 Bijlage G

Hoogte overgang Beton/Staal	25000	mm

Eigenschappen mast

Type mast	W4S450	
Staalkwaliteit	S355	
Toelaatbare spanning	284	
Epsilon staal	0.81	

Uitgangspunten

Windgebied	II	
Bebouwd of onbebouwd	Onbebouwd	
2e orde	10%	

Afmetingen

Topdiameter	0.80	m
Voetdiameter	2.1	m
Hoogte overgang beton/staal	25.00	m
Hoogte mast	71.20	m
Wanddikte	16	mm
Gewicht	33883	kg

Hoogte

GW / opgw	45.50	m
150C1F1	34.30	m
150C1F2	22.90	m
150C1F3	11.50	m
RTG	0.20	m
380C1F1	34.30	m
380C1F2	22.90	m
380C1F3	11.50	m

Krachten	hoogte m	Fver kN	Floodrecht kN	F// kN	FSamengesteld kN	Moment per geleider kN
GW / opgw	45.5	5.2	17.2	0.0	17.2	783.6
150C1F1	34.3	19.2	49.1	0.0	49.1	1684.9
150C1F2	22.9	19.2	45.6	0.0	45.6	1044.0
150C1F3	11.5	19.2	41.1	0.0	41.1	472.7
RTG	0.2	10.4	22.9	0.0	22.9	4.6
380C1F1	34.3	38.4	98.2	0.0	98.2	3369.9
380C1F2	22.9	38.4	91.2	0.0	91.2	2087.9
380C1F3	11.5	38.4	82.2	0.0	82.2	945.4

Stuwdruk		3454.7	N
Moment overgang Beton/Staal (Inclusief 2e orde)		15232	kNm

Controle spanning ten gevolge van normaalkracht

Plooigevoeligheid normaalkracht			
Reductiefactor normaalkracht	ρa	0.62	
Effectieve oppervlakte	Aeff	64711	mm2
Optredende spanning t.g.v. normaalkracht			

Controle spanning ten gevolge van buigend moment

Buigend moment plooigevoeligheid			
Reductiefactor buigend moment	ρa	0.92	
Effectieve weerstandmoment	Weff	49708658	mm3
Optredende spanning t.g.v. buigend moment			

Controle spanning ten gevolge van normaalkracht en buigend moment

Totaal optredende spanning	283	N/mm2
Unity check	1.00	Voldoet

W6HL400 Bijlage J

Segment	**1**	
Lengte	**12**	**m**
Gewicht	**130.0**	**ton**

Betonklasse	B	Voldoet
Voorspananker	FeP1860	
Nkabel; `toegepast Buiten	25	Voldoet
Nkabel; `toegepast Binnen	8	
Dwarswapening	12	rond
Materiaal	550	Fb550
Aantal ringbeugels/meter hoogte	5	Voldoet

Keuze Betonklasse	A	B	C	D
	C55/67	C70/85	C80/95	C90/105
fck	55	70	80	90
yck	1.5	1.5	1.5	1.5
fcd	-36.7	-46.7	-53.3	-60.0
Trekspanning	0	0	0	0

Optredende spanningen

Segment	1		
Ingevulde wanddikte	500		
	Voet	Top	
Buitendiameter	3500	2954	mm
Buitenomtrek	10996	9279	mm
Wanddikte	500	500	mm
Binnendiameter	2500	1954	mm
Doorsnede	Hol	Hol	
Omtrek/dikte	21.99	18.56	Verhouding
Oppervlak	4712389	3854146	mm2
Weerstandsmoment	3113542719	2045500477	mm3
Maximale moment	64856	kNm	
Maximale moment + 2de orde	71341	kNm	
Maximaal dwarskracht	1676	kN	
Maximaal torsiemoment	3993683	kNmm	
Maximaal normaalkracht	4325	kN	
Spanning tgv normaalkracht	0.9	N/mm2	
Spanning tgv moment	24.1	N/mm2	
2de orde effect verrekening	10%		
Factor e.g	1.2		
Maximale drukspanning	-25.0	Mpa	
Toelaatbare spanning	-46.7	Komende uit betonklasse	
Maximale trekspanning	23.4	MPa	
Toelaatbare trekspanning	0.0	MPa	

Voorspanning

Benodigde voorspanning ULS	23.4	Mpa
Benodigde voorspanning SLS	24	Mpa
Benodigde voorspankracht	104732	kN
Resulterende betonspanningen		
Trekzijde	0	Mpa
Drukzijde	-48	Mpa
Na relaxatie	-44	MPa
Keuze voorspankabels	FeP1860	
Toelaatbare spanning	1200	MPa
Astreng	150	mm2
streng/kabel	19	
Akabel	2850	mm2
Benodigde voorspankracht	104732	kN
Nkabel; benodigd	31	
Nkabel; `toegepast Buiten	25	
Nkabel; `toegepast Binnen	8	
Ankerverdeling top		
Gegeven E6-19		
Randafstand ankers	230	mm
Minimale hoh-afstand ankers	300	mm
Anker circel buiten	2494	mm
Anker cirkel binnen	1894	mm
Omtrek ankercirkel buiten	7834	mm
Omtrek ankercirkel binnen	5949	mm
Aantal plaatsbare ankers buitenring	26	
Aantal plaatsbare ankers binnenring	19	

Afschuiving in wapening door dwarskracht **(NEN-EN 1992-1-1 Hfst. 6.2.3)**

Max. dwarskracht in segment	1676	kN
Max. dwarskracht / doorsnede	1665	kN
Maximale optredende afschuiving in de wand	1665	kN
Hoek loodrecht dwarskracht/drukdiagonaal	30	21,8≤Θ≤45
cot Θ	2	hoek
alfa	80	
cot alfa	0.18	
Asw	113	mm2
s	200	mm
z (horende max. dwarskracht)	2947	mm
fywd	478	Mpa
VRD,S	7488	kN
Toetsing afschuiving door dwarskracht	0.22	

Toetsing betonspanning	0.94	Voldoet
Toetsing afschuiving in wand	0.27	Voldoet

Afschuiving in wapening door torsie

Maximaal torsie	3993683	kNmm
Maximaal afschuiving torsie / doorsnede	3265	kN
Maximaal dwarskracht bij torsie	754	kN
Max. afschuiving wand door dwarskracht	754	kN
Hoek loodrecht dwarskracht/drukdiagonaal	30	21,8≤Θ≤45
cot Θ	2	hoek
alfa	80	
cot alfa	0.18	
Asw	113	mm2
s	200	mm
z (dwarskracht)	2947	mm
z (torsie)	7686	mm
fywd	478	Mpa
VRD,max (dwarskracht)	7488	kN
VRD,max (torsie)	19533	kN
Toetsing afschuiving door dwarskracht	0.10	
Toetsing afschuiving door torsie	0.17	
Totaal	0.27	

W6HL400 Bijlage J

Segment	**2**	
Lengte	**11**	**m**
Gewicht	**82.8**	**ton**

Betonklasse	B	Voldoet
Voorspananker	FeP1860	
Nkabel; `toegepast Buiten	18	Voldoet
Nkabel; `toegepast Binnen	8	
Dwarswapening	12	rond
Materiaal	550	Fb550
Aantal ringbeugels/meter hoogte	5	Voldoet

Keuze Betonklasse	A	B	C	D
	C55/67	C70/85	C80/95	C90/105
fck	55	70	80	90
yck	1.5	1.5	1.5	1.5
fcd	-36.7	-46.7	-53.3	-60.0
Trekspanning	0	0	0	0

Optredende spanningen

Segment	2		
Ingevulde wanddikte	450		
	Voet	Top	
Buitendiameter	2954	2453	mm
Buitenomtrek	9279	7706	mm
Wanddikte	450	450	mm
Binnendiameter	2054	1553	mm
Doorsnede	Hol	Hol	
Omtrek/dikte	20.62	17.12	Verhouding
Oppervlak	3539417	2831367	mm2
Weerstandsmoment	1938490433	1216002093	mm3
Maximale moment	44063	kNm	
Maximale moment + 2de orde	48470	kNm	
Maximaal dwarskracht	1665	kN	
Maximaal torsiemoment	3993683	kNmm	
Maximaal normaalkracht	2795	kN	
Spanning tgv normaalkracht	0.8	N/mm2	
Spanning tgv moment	25.4	N/mm2	
2de orde effect verrekening	10%		
Factor e.g	1.2		
Maximale drukspanning	-26.2	Mpa	
Toelaatbare spanning	-46.7	Komende uit betonklasse	
Maximale trekspanning	24.8	MPa	
Toelaatbare trekspanning	0.0	MPa	

Voorspanning

Benodigde voorspanning ULS	24.8	Mpa
Benodigde voorspanning SLS	25	Mpa
Benodigde voorspankracht	87204	kN
Resulterende betonspanningen		
Trekzijde	0	Mpa
Drukzijde	-51	Mpa
Na relaxatie	-45	MPa
Keuze voorspankabels	FeP1860	
Toelaatbare spanning	1200	MPa
Astreng	150	mm2
streng/kabel	19	
Akabel	2850	mm2
Benodigde voorspankracht	87204	kN
Nkabel; benodigd	26	
Nkabel; `toegepast Buiten	18	
Nkabel; `toegepast Binnen	8	
Ankerverdeling top		
Gegeven E6-19		
Randafstand ankers	230	mm
Minimale hoh-afstand ankers	300	mm
Anker circel buiten	1993	mm
Anker cirkel binnen	1393	mm
Omtrek ankercirkel buiten	6261	mm
Omtrek ankercirkel binnen	4376	mm
Aantal plaatsbare ankers buitenring	20	
Aantal plaatsbare ankers binnenring	14	

Afschuiving in wapening door dwarskracht **(NEN-EN 1992-1-1 Hfst. 6.2.3)**

Max. dwarskracht in segment	1665	kN
Max. dwarskracht / doorsnede	1655	kN
Maximale optredende afschuiving in de wand	1655	kN
Hoek loodrecht dwarskracht/drukdiagonaal	30	21,8≤Θ≤45
cot Θ	2	hoek
alfa	80	
cot alfa	0.18	
Asw	113	mm2
s	200	mm
z (horende max. dwarskracht)	2407	mm
fywd	478	Mpa
VRD,S	6116	kN
Toetsing afschuiving door dwarskracht	0.27	

Toetsing betonspanning	0.97	Voldoet
Toetsing afschuiving in wand	0.37	Voldoet

Afschuiving in wapening door torsie

Maximaal torsie	3993683	kNmm
Maximaal afschuiving torsie / doorsnede	3973	kN
Maximaal dwarskracht bij torsie	749	kN
Max. afschuiving wand door dwarskracht	749	kN
Hoek loodrecht dwarskracht/drukdiagonaal	30	21,8≤Θ≤45
cot Θ	2	hoek
alfa	80	
cot alfa	0.18	
Asw	113	mm2
s	200	mm
z (dwarskracht)	2407	mm
z (torsie)	6316	mm
fywd	478	Mpa
VRD,max (dwarskracht)	6116	kN
VRD,max (torsie)	16052	kN
Toetsing afschuiving door dwarskracht	0.12	
Toetsing afschuiving door torsie	0.25	
Totaal	0.37	

W6HL400 Bijlage J

Hoogte overgang Beton/Staal	23000	mm

Eigenschappen mast

Type mast	W6HL400	
Staalkwaliteit	S355	
Toelaatbare spanning	284	
Epsilon staal	0.81	

Uitgangspunten

Windgebied	II	
Bebouwd of onbebouwd	Onbebouwd	
2e orde	10%	

Afmetingen

Topdiameter	0.80	m
Voetdiameter	2.447	m
Hoogte overgang beton/staal	23.00	m
Hoogte mast	59.30	m
Wanddikte	24	mm
Gewicht	35538	kg

Hoogte

GW / opgw	36.30	m
380C1F1	26.30	m
380C1F2	16.10	m
380C1F3	5.90	m
RTG	0.30	m
380C2F1	26.30	m
380C2F2	16.10	m
380C2F3	5.90	m

Krachten	hoogte m	Fver kN	Floodrecht kN	F// kN	FSamengesteld kN	Moment per geleider kN
GW / opgw	36.3	18.7	65.0	0.0	65.0	2359.0
380C1F1	26.3	58.8	245.0	0.0	245.0	6443.6
380C1F2	16.1	58.8	240.1	0.0	240.1	3865.4
380C1F3	5.9	58.8	234.0	0.0	234.0	1380.5
RTG	0.3	18.7	59.7	-113.0	127.8	38.3
380C2F1	26.3	58.8	245.0	0.0	245.0	6443.6
380C2F2	16.1	58.8	240.1	0.0	240.1	3865.4
380C2F3	5.9	58.8	234.0	0.0	234.0	1380.5

Stuwdruk 744.6 N

Moment overgang Beton/Staal (Inclusief 2e orde)		29173	kNm

Controle spanning ten gevolge van normaalkracht

Plooigevoeligheid normaalkracht			
Reductiefactor normaalkracht	ρa	0.71	
Effectieve oppervlakte	Aeff	129533	mm2
Optredende spanning t.g.v. normaalkracht			

Controle spanning ten gevolge van buigend moment

Buigend moment plooigevoeligheid			
Reductiefactor buigend moment	ρa	1.00	
Effectieve weerstandmoment	Weff	109589767	mm3
Optredende spanning t.g.v. buigend moment			

Controle spanning ten gevolge van normaalkracht en buigend moment

Totaal optredende spanning	260	N/mm2
Unity check	0.92	Voldoet

W6S400 Bijlage I

Segment	**1**	
Lengte	**12**	**m**
Gewicht	**83.7**	**ton**

Betonklasse	A	Voldoet
Voorspananker	FeP1860	
Nkabel; `toegepast Buiten	12	Voldoet
Nkabel; `toegepast Binnen	4	
Dwarswapening	12	rond
Materiaal	550	Fb550
Aantal ringbeugels/meter hoogte	5	Voldoet

Keuze Betonklasse	A	B	C	D
	C55/67	C70/85	C80/95	C90/105
fck	55	70	80	90
yck	1.5	1.5	1.5	1.5
fcd	-36.7	-46.7	-53.3	-60.0
Trekspanning	0	0	0	0

Optredende spanningen

Segment	1		
Ingevulde wanddikte	500		
	Voet	Top	
Buitendiameter	2400	2079	mm
Buitenomtrek	7540	6533	mm
Wanddikte	500	500	mm
Binnendiameter	1400	1079	mm
Doorsnede	Hol	Hol	
Omtrek/dikte	15.08	13.07	Verhouding
Oppervlak	2984513	2481019	mm2
Weerstandsmoment	1200022944	818681792	mm3
Maximale moment	20652	kNm	
Maximale moment + 2de orde	22718	kNm	
Maximaal dwarskracht	541	kN	
Maximaal torsiemoment	0	kNmm	
Maximaal normaalkracht	2904	kN	
Spanning tgv normaalkracht	1.0	N/mm2	
Spanning tgv moment	19.2	N/mm2	
2de orde effect verrekening	10%		
Factor e.g	1.2		
Maximale drukspanning	-20.2	Mpa	
Toelaatbare spanning	-36.7	Komende uit betonklasse	
Maximale trekspanning	18.5	MPa	
Toelaatbare trekspanning	0.0	MPa	

Voorspanning

Benodigde voorspanning ULS	18.5	Mpa
Benodigde voorspanning SLS	15	Mpa
Benodigde voorspankracht	54322	kN
Resulterende betonspanningen		
Trekzijde	0	Mpa
Drukzijde	-39	Mpa
Na relaxatie	-36	MPa
Keuze voorspankabels	FeP1860	
Toelaatbare spanning	1200	MPa
Astreng	150	mm2
streng/kabel	19	
Akabel	2850	mm2
Benodigde voorspankracht	54322	kN
Nkabel; benodigd	16	
Nkabel; `toegepast Buiten	12	
Nkabel; `toegepast Binnen	4	
Ankerverdeling top		
Gegeven E6-19		
Randafstand ankers	230	mm
Minimale hoh-afstand ankers	300	mm
Anker circel buiten	1619	mm
Anker cirkel binnen	1019	mm
Omtrek ankercirkel buiten	5088	mm
Omtrek ankercirkel binnen	3203	mm
Aantal plaatsbare ankers buitenring	16	
Aantal plaatsbare ankers binnenring	10	

Afschuiving in wapening door dwarskracht **(NEN-EN 1992-1-1 Hfst. 6.2.3)**

Max. dwarskracht in segment	541	kN
Max. dwarskracht / doorsnede	534	kN
Maximale optredende afschuiving in de wand	534	kN
Hoek loodrecht dwarskracht/drukdiagonaal	30	21,8≤Θ≤45
cot Θ	2	hoek
alfa	80	
cot alfa	0.18	
Asw	113	mm2
s	200	mm
z (horende max. dwarskracht)	2072	mm
fywd	478	Mpa
VRD,S	5266	kN
Toetsing afschuiving door dwarskracht	0.10	

Toetsing betonspanning	0.97	Voldoet
Toetsing afschuiving in wand	0.10	Voldoet

Afschuiving in wapening door torsie

Maximaal torsie	0	kNmm
Maximaal afschuiving torsie / doorsnede	0	kN
Maximaal dwarskracht bij torsie	0	kN
Max. afschuiving wand door dwarskracht	0	kN
Hoek loodrecht dwarskracht/drukdiagonaal	30	21,8≤Θ≤45
cot Θ	2	hoek
alfa	80	
cot alfa	0.18	
Asw	113	mm2
s	200	mm
z (dwarskracht)	2072	mm
z (torsie)	942	mm
fywd	478	Mpa
VRD,max (dwarskracht)	5266	kN
VRD,max (torsie)	2395	kN
Toetsing afschuiving door dwarskracht	0.00	
Toetsing afschuiving door torsie	0.00	
Totaal	0.00	

W6S400 Bijlage I

Segment	**2**	
Lengte	**11**	**m**
Gewicht	**60.2**	**ton**

Betonklasse	A	Voldoet
Voorspananker	FeP1860	
Nkabel; `toegepast Buiten	12	Voldoet
Nkabel; `toegepast Binnen	4	
Dwarswapening	12	rond
Materiaal	550	Fb550
Aantal ringbeugels/meter hoogte	5	Voldoet

Keuze Betonklasse	A	B	C	D
	C55/67	C70/85	C80/95	C90/105
fck	55	70	80	90
yck	1.5	1.5	1.5	1.5
fcd	-36.7	-46.7	-53.3	-60.0
Trekspanning	0	0	0	0

Optredende spanningen

Segment	2		
Ingevulde wanddikte	450		
	Voet	Top	
Buitendiameter	2079	1786	mm
Buitenomtrek	6533	5610	mm
Wanddikte	450	450	mm
Binnendiameter	1179	886	mm
Doorsnede	Hol	Hol	
Omtrek/dikte	14.52	12.47	Verhouding
Oppervlak	2303603	1888220	mm2
Weerstandsmoment	791418544	525138568	mm3
Maximale moment	13897	kNm	
Maximale moment + 2de orde	15287	kNm	
Maximaal dwarskracht	533	kN	
Maximaal torsiemoment	0	kNmm	
Maximaal normaalkracht	1918	kN	
Spanning tgv normaalkracht	0.8	N/mm2	
Spanning tgv moment	19.7	N/mm2	
2de orde effect verrekening	10%		
Factor e.g	1.2		
Maximale drukspanning	-20.5	Mpa	
Toelaatbare spanning	-36.7	Komende uit betonklasse	
Maximale trekspanning	19.1	MPa	
Toelaatbare trekspanning	0.0	MPa	

Voorspanning

Benodigde voorspanning ULS	19.1	Mpa
Benodigde voorspanning SLS	15	Mpa
Benodigde voorspankracht	43517	kN
Resulterende betonspanningen		
Trekzijde	0	Mpa
Drukzijde	-40	Mpa
Na relaxatie	-35	MPa
Keuze voorspankabels	FeP1860	
Toelaatbare spanning	1200	MPa
Astreng	150	mm2
streng/kabel	19	
Akabel	2850	mm2
Benodigde voorspankracht	43517	kN
Nkabel; benodigd	13	
Nkabel; `toegepast Buiten	12	
Nkabel; `toegepast Binnen	4	
Ankerverdeling top		
Gegeven E6-19		
Randafstand ankers	230	mm
Minimale hoh-afstand ankers	300	mm
Anker circel buiten	1326	mm
Anker cirkel binnen	726	mm
Omtrek ankercirkel buiten	4165	mm
Omtrek ankercirkel binnen	2280	mm
Aantal plaatsbare ankers buitenring	13	
Aantal plaatsbare ankers binnenring	7	

Afschuiving in wapening door dwarskracht **(NEN-EN 1992-1-1 Hfst. 6.2.3)**

Max. dwarskracht in segment	533	kN
Max. dwarskracht / doorsnede	527	kN
Maximale optredende afschuiving in de wand	527	kN
Hoek loodrecht dwarskracht/drukdiagonaal	30	21,8≤Θ≤45
cot Θ	2	hoek
alfa	80	
cot alfa	0.18	
Asw	113	mm2
s	200	mm
z (horende max. dwarskracht)	1768	mm
fywd	478	Mpa
VRD,S	4493	kN
Toetsing afschuiving door dwarskracht	0.12	

Toetsing betonspanning	0.97	Voldoet
Toetsing afschuiving in wand	0.12	Voldoet

Afschuiving in wapening door torsie

Maximaal torsie	0	kNmm
Maximaal afschuiving torsie / doorsnede	0	kN
Maximaal dwarskracht bij torsie	0	kN
Max. afschuiving wand door dwarskracht	0	kN
Hoek loodrecht dwarskracht/drukdiagonaal	30	21,8≤Θ≤45
cot Θ	2	hoek
alfa	80	
cot alfa	0.18	
Asw	113	mm2
s	200	mm
z (dwarskracht)	1768	mm
z (torsie)	1100	mm
fywd	478	Mpa
VRD,max (dwarskracht)	4493	kN
VRD,max (torsie)	2794	kN
Toetsing afschuiving door dwarskracht	0.00	
Toetsing afschuiving door torsie	0.00	
Totaal	0.00	

W6S400 Bijlage I

Hoogte overgang Beton/Staal	23000	mm

Eigenschappen mast

Type mast	W6S400
Staalkwaliteit	S355
Toelaatbare spanning	284
Epsilon staal	0.81

Uitgangspunten

Windgebied	II
Bebouwd of onbebouwd	Onbebouwd
2e orde	10%

Afmetingen

Topdiameter	0.80	m
Voetdiameter	1.776	m
Hoogte overgang beton/staal	23.00	m
Hoogte mast	59.90	m
Wanddikte	15	mm
Gewicht	28340	kg

Hoogte

GW / opgw	36.20	m
380C1F1	26.20	m
380C1F2	16.00	m
380C1F3	5.80	m
RTG	0.20	m
380C2F1	26.20	m
380C2F2	16.00	m
380C2F3	5.80	m

Krachten	**hoogte m**	**Fver kN**	**Floodrecht kN**	**F// kN**	**FSamengesteld kN**	**Moment per geleider kN**
GW / opgw	36.2	4.6	15.1	0.0	15.1	545.1
380C1F1	26.2	34.1	85.8	0.0	85.8	2248.2
380C1F2	16.0	34.1	79.1	0.0	79.1	1265.4
380C1F3	5.8	34.1	70.5	0.0	70.5	408.8
RTG	0.2	34.1	85.8	0.0	85.8	17.2
380C2F1	26.2	34.1	79.1	0.0	79.1	2072.1
380C2F2	16.0	34.1	70.5	0.0	70.5	1127.7
380C2F3	5.8	9.2	21.0	0.0	21.0	121.8

Stuwdruk		603.5	N
Moment overgang Beton/Staal (Inclusief 2e orde)		9251	kNm

Controle spanning ten gevolge van normaalkracht

Plooigevoeligheid normaalkracht			
Reductiefactor normaalkracht	ρa	0.65	
Effectieve oppervlakte	Aeff	54126	mm2
Optredende spanning t.g.v. normaalkracht			

Controle spanning ten gevolge van buigend moment

Buigend moment plooigevoeligheid			
Reductiefactor buigend moment	ρa	0.95	
Effectieve weerstandmoment	Weff	34497717	mm3
Optredende spanning t.g.v. buigend moment			

Controle spanning ten gevolge van normaalkracht en buigend moment

Totaal optredende spanning	261	N/mm2
Unity check	0.92	Voldoet

74102194-ETD/POL 13-2622 V4.0 Definitief

Engineering ZW380
Constructieberekening betonnen masten ten behoeve van vergunningaanvraag

Arnhem, 6 maart 2014

Auteur(s) E.J. Platenkamp

In opdracht van TennneT TSO B.V. Projectnummer 000.145.11

auteur : EJ Platenkamp	beoordeeld : AJP van der Wekken
30 blz. 10 bijl. EJP/JEH	goedgekeurd : A. van der Wal

KEMA Nederland B.V. Utrechtseweg 310, 6812 AR Arnhem Postbus 9035, 6800 ET Arnhem Nederland
T +31 26 356 9111 F +31 26 442 8388 contact@dnvkema.com www.dnvkema.com Handelsregister Arnhem 09080262

Copyright © 2013, KEMA Nederland B.V., Arnhem, Nederland. Alle rechten voorbehouden.

Het is verboden om dit document op enige manier te wijzigen, het opsplitsen in delen daarbij inbegrepen. In geval van afwijkingen tussen een elektronische versie (bijv. een PDF bestand) en de originele door KEMA verstrekte papieren versie, prevaleert laatstgenoemde.

KEMA Nederland B.V. en/of de met haar gelieerde maatschappijen zijn niet aansprakelijk voor enige directe, indirecte, bijkomstige of gevolgschade ontstaan door of bij het gebruik van de informatie of gegevens uit dit document, of door de onmogelijkheid die informatie of gegevens te gebruiken.

De inhoud van dit rapport mag slechts als één geheel aan derden kenbaar worden gemaakt, voorzien van bovengenoemde aanduidingen met betrekking tot auteursrechten, aansprakelijkheid, aanpassingen en rechtsgeldigheid.

INHOUD

Pagina

1 Inleiding 4

2 Uitgangspunten 5
2.1 Gebruikte normen 5
2.2 Materiaal typeringen mast 5
2.3 Constructie typering 6
2.4 Uitgangspunten uit de beschouwde normen 6
2.5 Veldlengte 8

3 Mastafmetingen 9

4 Beschrijving constructie 14
4.1 Materiaalklassen 15
4.2 Elektrische aarding 19

5 Conclusie betonnen masten 20

Bijlage A Berekening W2S400 21

Bijlage B Berekening W2HL400 22

Bijlage C Berekening W4S350 23

Bijlage D Berekening W4HL350 24

Bijlage E Berekening W4S400 25

Bijlage F Berekening W4HL400 26

Bijlage G Berekening W4S450 27

Bijlage H Berekening W4HK450 28

Bijlage I Berekening W6S400 29

Bijlage J Berekening W6HL400 30

1 INLEIDING

Dit document geeft een samenvatting van de ontwerpbelastingen en berekeningen van de volgende betonnen masttypen, geschikt voor de bouwaanvraag:

- Steunmast geschikt voor twee-circuits, 2x 380 kV, 400 meter veldlengte; type W2S400;
- Hoekmast geschikt voor twee-circuits, 2x 380kV, 400 meter veldlengte, lijnhoek van 130 graden, type W2HL400;
- Steunmast geschikt voor vier-circuits, 2x 380 kV en 2x 150 kV, 350 meter veldlengte; type W4S350;
- Hoekmast geschikt voor vier-circuits, 2x 380 kV en 2x 150 kV, 350 meter veldlengte, lijnhoek van 130 graden, type W4HL350;
- Steunmast geschikt voor vier-circuits, 2x 380 kV en 2x 150 kV, 400 meter veldlengte; type W4S400;
- Hoekmast geschikt voor vier-circuits, 2x 380 kV en 2x 150 kV, 400 meter veldlengte, lijnhoek van 130 graden, type W4HL400;
- Steunmast geschikt voor vier-circuits, 2x 380 kV en 2x 150 kV, 450 meter veldlengte; type W4S450;
- Hoekmast geschikt voor vier-circuits, 2x 380 kV en 2x 150 kV, 450 meter veldlengte, lijnhoek van 150 graden, type W4HK450;
- Steunmast geschikt voor vier-circuits, 4x 380 kV, 400 meter veldlengte; type W6S400;
- Hoekmast geschikt voor vier-circuits, 4x 380 kV, 400 meter veldlengte, lijnhoek van 130 graden, type W6HL400.

De ontwerpbelastingen voor de betonnen Wintrack masten zijn gebaseerd op de DNV KEMA vergunningsdocumenten voor de stalen varianten.

Voor alle masttypes zijn de ontwerpbelastingen bepaald. De belastingen zijn zo opgesteld dat deze niet locatie specifiek worden bepaald maar generiek met maximale veldlengte en maximale lijnhoek, tussen opeenvolgende masten. Het effect op de belastingen door verschil in hoogte van opeenvolgende masten wordt niet meegenomen.

De aanpak is gebaseerd op Bijlage IV B95-STA-KA-1300165 Berekening Wintrack betonnen masten van 20 februari 2013 versie 0.3.

2 UITGANGSPUNTEN

De in dit document gepresenteerde belastingen zijn niet bepaald op basis van analyse van alle door NEN-EN 50341 voorgeschreven belastinggevallen maar door DNV KEMA zijn die belastinggevallen of combinaties daarvan geselecteerd die de maatgevende belastingen veroorzaken.

Voor steunmasten met een verhoging tot maximaal 10 meter geldt dat deze berekend worden voor een maximale lijnhoek van 2 x 2.5. Voor hoekmasten wordt er een onderscheid gemaakt in de maximaal toelaatbare hoek op de mast, kenbaar gemaakt met een codering in het masttype met K (150°), L (130°) en M (120°).

Overige uitgangspunten en aannames zijn:

- trekparameter bij 10 °C: 1800 m
- geleider 380 kV: 4 bundel AMS620
- geleider 150 kV: 2 bundel AMS620
- bliksemgeleider/OPGW: 1 bundel BRUGG OPGW 226-AL3/38-A20SA
- retour stroomgeleider: 2 bundel WDI AACSR 242-39 Hawk
- hoogte mast en ophangpunten conform de documenten: 12-00570 rapport “mastafmetingen 4x380 kv + 220-380 kV rev 3.0” en 12-00572 rapport “mastafmetingen 2x380+150-380 rev 3.0”
- belastingen zijn inclusief belastingfactoren volgens de NEN-EN 50341-3-15
- Maximum mastsegment gewicht van 35 ton.

2.1 Gebruikte normen

- NEN - EN50341-1, “Bovengrondse elektrische lijnen boven 45 kV wisselspanning – Deel 1: Algemene eisen - Gemeenschappelijke specificaties
- NEN - EN50341-3-15, “Bovengrondse elektrische lijnen boven 45 kV wisselspanning - Deel 3: Verzameling van nationale normatieve aspecten”
- NEN-EN 1990:2002, "Eurocode - Grondslagen van het constructief ontwerp"
- NEN-EN 1992-1-1: Ontwerp en berekening Betonconstructies.

2.2 Materiaal typeringen mast

- Betonkwaliteit: C55/67, C70/85, C80/95 en C90/105
- Wapening Fe550B
- Nagerekt voorspanstaal kwaliteit FeP1860 uitgaande van 150 mm2 per streng

- Dekking 50 mm
- Levensduur 50 jaar conform NEN-EN 50341
- Milieuklasse: XC4, XD3, eventueel XF2 afhankelijk van de locaties
- Materiaalfactor van 1,5 voor beton
- Materiaalfactor van 1,5 voor voorgerekt en nagerekt staal
- Materiaalfactor van 1,15 voor wapeningstaal

2.3 Constructie typering

Veiligheidsklasse	3	1)	$\gamma_{f;g}$ =	1.20	$\gamma_{f;q}$ =	1.50
		2)	$\gamma_{f;g}$ =	1.35		
Referentie periode	50 jaar					
Windtracé	II	onbebouwd				
IJsgebied A voor bliksemdraad en OPGW					5√d	
IJsgebied A voor retourstroom geleider					5√d	
IJsgebied B voor fase geleider					1,8√d	

2.4 Uitgangspunten uit de beschouwde normen

Berekening capaciteit betonnen secties

Berekening van benodigde weerstandmoment en wanddikte tegen maximaal optredend moment:

$$W_{ben} = \frac{M_{tot}}{f_{cd}}$$

Waarin:

M_{tot} = Maximaal voetmoment uit de belastingen

f_{cd} = Rekenwaarde van tegenstaande betondruk spanning

$$f_{cd} = \frac{f_{ck}}{1.5}$$

f_{ck}= drukcapaciteit van beton

Weerstandsmoment voor een cirkelvormige doorsnede:

$$W = \frac{1}{32} \cdot D \times \pi \times (D^4 - d^4)$$

Bepaling voorspankracht ankers

$P_{benodigd}$ = Benodigde voorspankracht

Aantal strengen is afhankelijk van de dwarsdoorsnede per streng en de maximaal toelaatbare spanning per streng

$$P_{benodigd} = A_{streng} \cdot \sigma_{streng} \cdot n_{strengen}$$

Aantal ankers hangt van het aantal strengen per kabel af

$$n_{ankers} = \frac{n_{strengen}}{streng / kabel}$$

Bepaling benodigde dwarswapening

De weerstand V_{RD} tegen afschuiving wordt met onderstaande formule bepaald.

$$V_{RD,\max} = \frac{A_{SW}}{s} \cdot z \cdot f_{ywd} \cdot \cot\theta$$

Waarin:

A_{sw} = oppervlakte van de dwarsdoorsnede van de dwarskrachtwapening

s = hart op hartafstand van de beugels

f_{ywd}= rekenwaarde van de vloeigrens van de dwarskrachtwapening

z = Bij dwarskracht diameter van de ringwapening en bij afschuiving door torsie is de omtrek van de ringwapening.

Θ = Hoek tussen de drukdiagonaal van beton en de as van de ligger loodrecht op de dwarskrachtwapening

De torsieweerstand T_{RD} wordt met onderstaande formule bepaald.

$$T_{RD,\max} = 2 \cdot \nu \cdot \alpha_{cw} \cdot f_{cd} \cdot A_k \cdot t_{e_f} \cdot \sin\theta \cdot \cos\theta$$

Waarin:

v = 0.6 (sterkte reductiefactor)

α_{cw} = 2.5 ($1-\sigma_{cp}/f_{cd}$) factor waarmee met de spanning in de op druk belaste rand rekening is gehouden

f_{cd} = rekenwaarde van de drukspanning van beton

σ_{cp} = gemiddelde waarde betondrukspanning

A_k = Omsloten oppervlak inclusief de holle delen

t_{ef} = meewerkende wanddikte

Θ = (21,8 – 45 graden) hoek tussen de drukdiagonaal van beton en de as van de ligger loodrecht op de dwarskrachtwapening. De berekeningen zijn uitgevoerd bij een hoek van 30 graden.

De capaciteit van een op wringing en afschuiving belast element wordt met de onderstaande voorwaarde getoetst.

$$\frac{T_{ed}}{T_{RD,\max}} + \frac{V_{ed}}{V_{RD,\max}} \leq 1.0$$

T_{ed} = rekenwaarde van het aangrijpend wringend moment
V_{ed} = rekenwaarde van de aangrijpende dwarskracht

2.5 Bepaling maximale belasting op mastsegmenten

De belastingen op de mastsegmenten zijn gebaseerd op het buigmoment uit de geleiders, de wind en het eigengewicht van de mast. Dit is per segment bepaald. De krachten zijn gebaseerd op de NEN-EN-50341-3. Zie hiervoor de tabellen in hoofdstuk 3.

2.6 Veldlengte

De beschouwde masttypen zijn opgenomen in onderstaande tabel:

Tabel 1 – Masttypen

Mast type	Max. ahead span (m)	Max. back span (m)	Max. Lijn hoek (deg)	Mast type aangrenzende mast
W2S400	400	400	2 x 2.5	W2S400
W2HL400	400	400	2 x 25	W2S400
W4S350	350	350	2 x 2.5	W4S350
W4HL350	350	350	2 x 25	W4S350
W4S400	400	400	2 x 2.5	W4S400
W4HL400	400	400	2 x 25	W4S400
W4S450	450	450	2 x 2.5	W4S450
W4HK450	450	450	2 x 15	W4S450
W6S400	400	400	2 x 2.5	W6S400
W6HL400	400	400	2 x 25	W6S400

3 MASTAFMETINGEN

In de volgende tabel zijn de afmetingen en de belangrijke parameters per betonnen mast weergegeven. De resultaten van de berekening dienen als input voor het ontwerp van de fundering.

Tabel 2 - Afmetingen en belangrijke parameters van mast W2S400

	Segment				
	1	2	3	4	5
Betonklasse	C55/67	C55/67	C55/67	C55/67	C55/67
Lengte (mm)	12000	12000	12000	12000	6800
Voetdiameter (mm)	2200	1893	1587	1280	974
Topdiameter (mm)	1893	1587	1280	974	800
Wanddikte (mm)	400	350	300	250	200
Massa (kN)	598	441	308	198	89
Segment voet moment (kNm)	14361	9661	5273	2042	233
Dwarskracht (kN)	366	344	300	208	110
Torsiemoment (kNm)	0	0	0	0	0

Tabel 3 - Afmetingen en belangrijke parameters van mast W2HL400

	Segment					
	1	2	3	4	5	6
Betonklasse	C70/85	C70/85	C55/67	C55/67	C55/67	C55/67
Lengte (mm)	12000	12000	12000	12000	12000	3200
Voetdiameter (mm)	2800	2420	2041	1661	1281	901
Topdiameter (mm)	2420	2041	1661	1281	901	800
Wanddikte (mm)	500	450	400	300	200	150
Massa (kN)	955	725	524	317	178	43
Segment voet moment (kNm)	39217	26497	14419	6286	1815	230
Dwarskracht (kN)	968	959	697	446	192	67
Torsiemoment (kNm)	15	15	15	15	15	15

Tabel 4 - Afmetingen en belangrijke parameters van mast W4S350

	Segment				
	1	2	3	4	5
Betonklasse	C55/67	C55/67	C55/67	C55/67	C55/67
Lengte (mm)	12000	12000	12000	12000	7600
Voetdiameter (mm)	2200	1898	1596	1294	991
Topdiameter (mm)	1898	1596	1294	991	800
Wanddikte (mm)	450	400	300	250	200
Massa (kN)	662	492	300	204	97
Segment voet moment (kNm)	17392	11481	5977	1992	139
Dwarskracht (kN)	452	429	387	268	24
Torsiemoment (kNm)	0	0	0	0	0

Tabel 5 - Afmetingen en belangrijke parameters van mast W4HL350

	Segment				
	1	2	3	4	5
Betonklasse	C70/85	C70/85	C70/85	C70/85	C55/67
Lengte (mm)	12000	12000	12000	12000	7500
Voetdiameter (mm)	3000	2524	2049	1573	1097
Topdiameter (mm)	2524	2049	1573	1097	800
Wanddikte (mm)	500	450	400	300	150
Massa (kN)	1039	755	491	283	101
Segment voet moment (kNm)	50452	33517	17373	5918	462
Dwarskracht (kN)	1266	1257	1126	776	65
Torsiemoment (kNm)	1740	1740	1740	1210	125

Tabel 6 - Afmetingen en belangrijke parameters van mast W4S400

	Segment					
	1	2	3	4	5	6
Betonklasse	C55/67	C55/67	C55/67	C55/67	C55/67	C55/67
Lengte (mm)	12000	12000	12000	12000	12000	3300
Voetdiameter (mm)	2400	2097	1793	1490	1187	883
Topdiameter (mm)	2097	1793	1490	1187	883	800
Wanddikte (mm)	500	450	400	300	200	150
Massa (kN)	793	609	448	281	166	42
Segment voet moment (kNm)	22868	16128	9759	4420	1168	51
Dwarskracht (kN)	523	498	452	316	171	20
Torsiemoment (kNm)	0	0	0	0	0	0

Tabel 7 - Afmetingen en belangrijke parameters van mast W4HL400

	Segment					
	1	2	3	4	5	6
Betonklasse	C70/85	C70/85	C70/85	C70/85	C55/67	C55/67
Lengte (mm)	12000	12000	12000	12000	12000	3200
Voetdiameter (mm)	3200	2744	2289	1833	1377	922
Topdiameter (mm)	2744	2289	1833	1377	922	800
Wanddikte (mm)	500	450	400	300	200	150
Massa (kN)	1118	842	599	352	189	44
Segment voet moment (kNm)	60347	42920	25887	11879	3206	230
Dwarskracht (kN)	1325	1315	1177	814	443	67
Torsiemoment (kNm)	1836	18365	1836	1277	707	0

Tabel 8 - Afmetingen en belangrijke parameters van mast W4S450

	Segment					
	1	2	3	4	5	6
Betonklasse	C55/67	C55/67	C55/67	C55/67	C55/67	C55/67
Lengte (mm)	12000	12000	12000	12000	12000	11200
Voetdiameter (mm)	2800	2463	2126	1789	1452	1115
Topdiameter (mm)	2463	2126	1789	1452	1115	800
Wanddikte (mm)	500	450	400	300	200	150
Massa (kN)	970	755	564	357	194	142
Segment voet moment (kNm)	29677	21824	14359	7570	2748	299
Dwarskracht (kN)	606	576	546	493	342	35
Torsiemoment (kNm)	0	0	0	0	0	0

Tabel 9 - Afmetingen en belangrijke parameters van mast W4HK450

	Segment					
	1	2	3	4	5	6
Betonklasse	C70/85	C70/85	C70/85	C70/85	C55/67	C55/67
Lengte (mm)	12000	12000	12000	12000	12000	11100
Voetdiameter (mm)	3300	2878	2456	2034	1612	1190
Topdiameter (mm)	2878	2456	2034	1612	1190	800
Wanddikte (mm)	500	450	400	300	250	200
Massa (kN)	1178	906	667	413	259	162
Segment voet moment (kNm)	57412	42426	27892	14608	5214	557
Dwarskracht (kN)	1146	1111	1077	975	677	53
Torsiemoment (kNm)	1737	1737	1737	1737	1219	148

Tabel 10 - Afmetingen en belangrijke parameters van mast W6S400

	Segment				
	1	2	3	4	5
Betonklasse	C55/67	C55/67	C55/67	C55/67	C55/67
Lengte (mm)	12000	12000	12000	12000	11900
Voetdiameter (mm)	2400	2079	1759	1438	1118
Topdiameter (mm)	2079	1759	1438	1118	800
Wanddikte (mm)	500	450	400	300	150
Massa (kN)	821	591	427	259	139
Segment voet moment (kNm)	22718	15287	8423	3399	427
Dwarskracht (kN)	541	533	440	341	185
Torsiemoment (kNm)	0	0	0	0	0

Tabel 11 - Afmetingen en belangrijke parameters van mast W6HL400

	Segment				
	1	2	3	4	5
Betonklasse	C70/85	C70/85	C70/85	C70/85	C55/67
Lengte (mm)	12000	12000	12000	12000	11300
Voetdiameter (mm)	3500	2954	2407	1861	1315
Topdiameter (mm)	2954	2407	1861	1315	800
Wanddikte (mm)	500	450	400	300	150
Massa (kN)	1274	888	614	341	158
Segment voet moment (kNm)	71341	48470	26908	10724	1797
Dwarskracht (kN)	1676	1665	1526	1049	561
Torsiemoment (kNm)	3994	3994	3994	2729	1439

Een aantal afmetingen zijn t.o.v. de stalen mast uitvoeringen gewijzigd. Deze wijzigingen zijn doorgevoerd vanwege de anders te hoge betondruk in de wand. Gemiddeld genomen zijn voor alle masten de voetdiameters met 10 % vergroot. Daarnaast zijn de masttop diameters vergroot naar 0.8 meter omdat uit studies van architect Z&J blijkt dat bij een vergrote mastvoet diameter een grotere masttop diameter esthetisch passender is.

Het is mogelijk is om de voetdiameter nog meer te vergroten om de betondruk in de wand te verlagen. Dit is niet toegepast vanwege dan de afmetingen teveel afwijken van de stalen varianten.

4 BESCHRIJVING CONSTRUCTIE

De masten bestaan per mastlocatie uit twee afzonderlijke taps toelopende buismasten, het zogenaamde bipole mastprincipe. De beschrijving van de constructie komt overeen met paragraaf 4.2 masten uit Bijlage IV B95-STA-KA-1300165_Wintrack – betonnen masten.

De belangrijkste randvoorwaarden uit dit document zijn:

- Trekspanning in de wand komende uit het moment moet volledig door voorspanning opgenomen worden
- De segmenten hebben een maximale lengte van 12 meter. Indien een verticaal element meer dan 35 ton weegt, heeft het de voorkeur de verticale betonnen elementen in losse cirkelsegmenten te vervaardigen.
- Alle segmenten worden in gewapend beton uitgevoerd met een doorgaande ronde sparing. In de doorgaande ronde sparing worden verticale voorspankabels aangebracht met verankeringen in de fundatiepoer
- De uitwendige voorspanning wordt op vijf niveaus voor 350 meter en 400 meter velden masten in fasen aangebracht. Voor de 450 meter velden masten wordt dit op zes niveaus aangebracht. Vanwege beperkte ruimte in de doorgaande sparing is het niet mogelijk alle voorspankabels langs de omtrek van de sparing te positioneren. De voorspankabels worden binnen de omtrek gelijkmatig verdeeld. Om de voorspankracht naar het beton te kunnen overdragen is het noodzakelijk een in het beton geintegreerde stalen plaat aan te brengen onder de ankerplaten van de voorspanelementen.
  Per segment worden de optredende spanningen, inclusief de voorspanspanning getoetst op de capaciteit. De bepaling van de capaciteit per segment is weergegeven in hoofdstuk 2.4.

De opmerking die hierbij gemaakt moet worden is dat het dwarskrachtmiddelpunt van de voorspanstrengen niet samenvalt met dat van de betonnen wand. Voor de herverdeling van belasting is een extra stalen eindplaat in het beton nodig. In een vervolgstudie, of mastdetaillering, zal de herverdeling tussen voorspanning en beton verder uitgezocht moeten worden.

Afwijkingen ten opzichte van document Bijlage III B95-STA-KA-1300165_Wintrack – betonnen masten zijn de volgende:

- De ankerbouten in de mastsegmenten worden zodanig voorgespannen dat bij een belasting uit mast en geleiders tot de Ultimate Limit State (ULS) de voorspanning niet opgeheven wordt. De ULS belasting is in de ontwerpnorm NEN-EN 50341 gedefinieerd als de maximale belasting uit mast en geleiders met toepassing van belastingsfactoren. De ankerbouten worden gedimensioneerd op de uiterste grenstoestand (ULS) trekbelasting als gedefinieerd in de ontwerpnorm. De maximale betondruk in de wand is de optelsom van de druk door voorspanning, uitwendige belasting op de mast en een reductie door de afname van voorspanning bij een uitwendige druk.

$$\frac{\Delta P_{beton} \cdot l_{beton}}{E_{beton} \cdot A_{beton}} = \Delta L = \frac{\Delta P_{\ anker} \cdot l_{anker}}{E_{anker} \cdot A_{anker}}$$

$$P_{uitw} = \Delta P_{beton} + \Delta P_{anker}$$

De belastingsverdeling is afhankelijk van de stijfheidsverhouding tussen de betonnen wand en de voorspanankers. De indrukking van het beton (ΔL) en de ankers geeft toename van de kracht op het beton P_{beton} en afname van de voorspanning in de ankers (P_{anker}). De verhouding van deze krachten is afhankelijk van de verhouding tussen EA_{beton} en EA_{anker} aangezien de lengtes L_{beton} en L_{anker} gelijk zijn.

- De schuifspanning komende uit torsiemoment en dwarskracht zijn in de berekeningen ook meegenomen. Voor steunmasten wordt het torsiemoment verwaarloosd. Voor hoek- of afspanmasten treedt de maximale schuifspanning door torsie en dwarskracht op bij eenzijdige afspanning en het afvallen van één circuit. Dit is conform NEN-EN-50341-3-15 belastingsituatie NL3 (Tabel 4.2.11/NL.3). Voor steunmasten treedt de maximale schuifspanning op komende uit de maximale dwarskracht (Belastingsituatie NL1, tabel 4.2.11/NL1). Om de genoemde schuifspanning te weerstaan worden de betonnen elementen met rond 12 mm ringwapening uitgevoerd. De ringwapening dient voldoende capaciteit te hebben om de schuifspanning te weerstaan. Per betonnen element wordt per meter hoogte het aantal ringen bepaald. Aangenomen wordt een minimaal hart op hart afstand van 100 mm tussen de ringen.

4.1 Materiaalklassen

In de bijlagen zijn de afmetingen, materiaalklassen en unity checks opgenomen. De belangrijkste gegevens per mast zijn hieronder gesommeerd:

Tabel 12 - Hoofdparameters wapening mast W2S400

	Segment				
	1	2	3	4	5
Betonklasse	C55/67	C55/67	C55/67	C55/67	C55/67
Type voorspananker	FeP1860	FeP1860	FeP1860	FeP1860	FeP1860
Aantal ankers buitenring	12	10	6	4	2
Aantal ankers binnenring	8	4	2	0	0
Diameter dwarswapening (mm)	12	12	12	12	12
Materiaal	Fb550	Fb550	Fb550	Fb550	Fb550
Aantal ringbeugels / meter hoogte	5	5	5	5	5

Tabel 13 - Hoofdparameters wapening mast W2HL400

	Segment					
	1	2	3	4	5	6
Betonklasse	C70/85	C70/85	C55/67	C55/67	C55/67	C55/67
Type voorspananker	FeP1860	FeP1860	FeP1860	FeP1860	FeP1860	FeP1860
Aantal anker buitenring	18	12	10	6	4	2
Aantal anker binnenring	8	8	4	2	0	0
Diameter dwarswapening (mm)	12	12	12	12	12	12
Materiaal	Fb550	Fb550	Fb550	Fb550	Fb550	Fb550
Aantal ringbeugels / meter hoogte	5	5	5	5	5	5

Tabel 14 - Hoofdparameters wapening mast W4S350

	Segment				
	1	2	3	4	5
Betonklasse	C55/67	C55/67	C55/67	C55/67	C55/67
Type voorspananker	FeP1860	FeP1860	FeP1860	FeP1860	FeP1860
Aantal anker buitenring	12	8	6	4	2
Aantal anker binnenring	4	4	2	0	0
Diameter dwarswapening (mm)	12	12	12	12	12
Materiaal	Fb550	Fb550	Fb550	Fb550	Fb550
Aantal ringbeugels / meter hoogte	5	5	5	5	5

Tabel 15 - Hoofdparameters wapening mast W4HL350

	Segment				
	1	2	3	4	5
Betonklasse	C70/85	C70/85	C70/85	C70/85	C55/67
Type voorspananker	FeP1860	FeP1860	FeP1860	FeP1860	FeP1860
Aantal anker buitenring	20	16	10	6	2
Aantal anker binnenring	8	8	5	1	0
Diameter dwarswapening (mm)	12	12	12	12	12
Materiaal	Fb550	Fb550	Fb550	Fb550	Fb550
Aantal ringbeugels / meter hoogte	5	5	5	5	5

Tabel 16 - Hoofdparameters wapening mast W4S400

	Segment				
	1	2	3	4	5
Betonklasse	C55/67	C55/67	C55/67	C55/67	C55/67
Type voorspananker	FeP1860	FeP1860	FeP1860	FeP1860	FeP1860
Aantal anker buitenring	12	10	9	6	4
Aantal anker binnenring	8	6	2	1	1
Diameter dwarswapening (mm)	12	12	12	12	12
Materiaal	Fb550	Fb550	Fb550	Fb550	Fb550
Aantal ringbeugels / meter hoogte	5	5	5	5	5

Tabel 17 - Hoofdparameters wapening mast W4HL400

	Segment				
	1	2	3	4	5
Betonklasse	C70/85	C70/85	C70/85	C70/85	C55/67
Type voorspananker	FeP1860	FeP1860	FeP1860	FeP1860	FeP1860
Aantal anker buitenring	20	16	10	6	2
Aantal anker binnenring	8	8	5	1	0
Diameter dwarswapening (mm)	12	12	12	12	12
Materiaal	Fb550	Fb550	Fb550	Fb550	Fb550
Aantal ringbeugels / meter hoogte	5	5	5	5	5

Tabel 18 - Hoofdparameters wapening mast W4S450

	Segment					
	1	2	3	4	5	6
Betonklasse	C55/67	C55/67	C55/67	C55/67	C55/67	C55/67
Type voorspananker	FeP1860	FeP1860	FeP1860	FeP1860	FeP1860	FeP1860
Aantal anker buitenring	12	10	10	8	4	3
Aantal anker binnenring	8	6	4	2	1	0
Diameter dwarswapening (mm)	12	12	12	12	12	12
Materiaal	Fb550	Fb550	Fb550	Fb550	Fb550	Fb550
Aantal ringbeugels / meter hoogte	5	5	5	5	5	5

Tabel 19 - Hoofdparameters wapening mast W4HK450

	Segment					
	1	2	3	4	5	6
Betonklasse	C70/85	C70/85	C70/85	C70/85	C55/67	C55/67
Type voorspananker	FeP1860	FeP1860	FeP1860	FeP1860	FeP1860	FeP1860
Aantal anker buitenring	20	16	12	10	6	2
Aantal anker binnenring	8	8	6	4	1	0
Diameter dwarswapening (mm)	12	12	12	12	12	12
Materiaal	Fb550	Fb550	Fb550	Fb550	Fb550	Fb550
Aantal ringbeugels / meter hoogte	5	5	5	5	5	5

Tabel 20 - Hoofdparameters wapening mast W6S400

	Segment				
	1	2	3	4	5
Betonklasse	C55/67	C55/67	C55/67	C55/67	C55/67
Type voorspananker	FeP1860	FeP1860	FeP1860	FeP1860	FeP1860
Aantal anker buitenring	12	12	8	6	2
Aantal anker binnenring	4	4	2	0	0
Diameter dwarswapening (mm)	12	12	12	12	12
Materiaal	Fb550	Fb550	Fb550	Fb550	Fb550
Aantal ringbeugels / meter hoogte	5	5	5	5	5

Tabel 21 - Hoofdparameters wapening mast W6HL400

	Segment				
	1	2	3	4	5
Betonklasse	C70/85	C70/85	C70/85	C70/85	C55/67
Type voorspananker	FeP1860	FeP1860	FeP1860	FeP1860	FeP1860
Aantal anker buitenring	25	18	12	8	2
Aantal anker binnenring	8	8	6	2	0
Diameter dwarswapening (mm)	12	12	12	12	12
Materiaal	Fb550	Fb550	Fb550	Fb550	Fb550
Aantal ringbeugels / meter hoogte	5	5	5	5	5

Overzicht van de gegevens van de genoemde masten zijn opgenomen in de bijlagen.

4.2 Elektrische aarding

Het betonnen mastlichaam en fundament dient aan de onderstaande aardingseisen te voldoen:

- De aarding van het mastlichaam en de aarding in het fundament moet één geheel vormen;
- De geleiding van bliksem- en kortsluitstromen, zal door separate geleiders aan de binnenzijde van de mast geschieden. Deze geleiding zal afgeschermd moeten worden van het constructiestaal;
- Blikseminslag en kortsluitstromen moeten voldoende afgevloeid worden naar de grond zonder schade aan de mast of fundament te bewerkstelligen;
- Het aardingssysteem moet aan de eisen van isolatie coördinatie voldoen;
- Aan de rand van de ZRO grens, dient bij kortsluiting of blikseminslag de potentiaal aan de gestelde eisen te voldoen;
- De stap- en aanraakspanning van het mastlichaam en fundament moet aan de gestelde eisen voldoen;
- Alle stalen elementen in het mastlichaam moet elektrisch gekoppeld zijn aan het interne aardingssysteem.

5 CONCLUSIE BETONNEN MASTEN

De controle van de sterkte van de voorgespannen betonnen masten is opgenomen in Bijlage A t/m C. De volgende masten zijn gecontroleerd en leiden tot onderstaande unity checks (UC):

Tabel 22 - Overzicht "unity checks" masten

Type mast	Maximale betonspanning (UC)	Maximale betonafschuiving (UC)
W2S400	0.83	0.08
W2H400	0.96	0.18
W4S350	0.96	0.10
W4H350	0.97	0.33
W4S400	0.98	0.11
W4H400	0.97	0.33
W4S450	0.89	0.11
W4H450	0.93	0.27
W6S400	0.97	0.12
W6HL400	0.97	0.46

Voor de masten gelden de volgende twee aanvullende conclusies.

1) Een aantal mastelementen voldoet niet aan het criterium van maximaal 35 ton, het zwaarste element is meer dan driemaal dit gewicht. Een oplossing is de hoogte van de elementen te reduceren. In de praktijk betekent dit dat een aantal elementen gelimiteerd wordt tot 3 a 4 meter hoogte. Een andere oplossing is om de elementen op locatie uit een aantal twee tot vier, segmenten samen te stellen. Deze opties zijn momenteel niet verder uitgewerkt.
2) De optredende spanning in het beton zit tegen de toelaatbare grens aan, dit is zichtbaar gemaakt in de Unity Check. In de ontwerpfase kan voor een ruimere marge gekozen worden.

BIJLAGE A BEREKENING W2S400

BIJLAGE B BEREKENING W2HL400

BIJLAGE C BEREKENING W4S350

BIJLAGE D BEREKENING W4HL350

BIJLAGE E BEREKENING W4S400

BIJLAGE F BEREKENING W4HL400

BIJLAGE G BEREKENING W4S450

BIJLAGE H BEREKENING W4HK450

BIJLAGE I BEREKENING W6S400

BIJLAGE J BEREKENING W6HL400

W2HL400 Bijlage B

Segment	**1**	
Lengte	**12**	**m**
Gewicht	**97.3**	**ton**

Betonklasse	B	Voldoet
Voorspananker	FeP1860	
Nkabel; `toegepast Buiten	18	Voldoet
Nkabel; `toegepast Binnen	8	
Dwarswapening	12	rond
Materiaal	550	Fb550
Aantal ringbeugels/meter hoogte	5	Voldoet

Keuze Betonklasse	A	B	C	D
	C55/67	C70/85	C80/95	C90/105
fck	55	70	80	90
yck	1.5	1.5	1.5	1.5
fcd	-36.7	-46.7	-53.3	-60.0
Trekspanning	0	0	0	0

Optredende spanningen

Segment	1		
Ingevulde wanddikte	500		
	Voet	Top	
Buitendiameter	2800	2420	mm
Buitenomtrek	8796	7603	mm
Wanddikte	500	500	mm
Binnendiameter	1800	1420	mm
Doorsnede	Hol	Hol	
Omtrek/dikte	17.59	15.21	Verhouding
Oppervlak	3612832	3016327	mm2
Weerstandsmoment	1787061321	1226772553	mm3
Maximale moment	35651	kNm	
Maximale moment + 2de orde	39217	kNm	
Maximaal dwarskracht	968	kN	
Maximaal torsiemoment	14750	kNmm	
Maximaal normaalkracht	3491	kN	
Spanning tgv normaalkracht	1.0	N/mm2	
Spanning tgv moment	22.0	N/mm2	
2de orde effect verrekening	10%		
Factor e.g	1.2		
Maximale drukspanning	-23.0	Mpa	
Toelaatbare spanning	-46.7	Komende uit betonklasse	
Maximale trekspanning	21.3	MPa	
Toelaatbare trekspanning	0.0	MPa	

Voorspanning

Benodigde voorspanning ULS	21.3	Mpa
Benodigde voorspanning SLS	18	Mpa
Benodigde voorspankracht	76664	kN
Resulterende betonspanningen		
Trekzijde	0	Mpa
Drukzijde	-44	Mpa
Na relaxatie	-40	MPa
Keuze voorspankabels	FeP1860	
Toelaatbare spanning	1200	MPa
Astreng	150	mm2
streng/kabel	19	
Akabel	2850	mm2
Benodigde voorspankracht	76664	kN
Nkabel; benodigd	23	
Nkabel; `toegepast Buiten	18	
Nkabel; `toegepast Binnen	8	
Ankerverdeling top		
Gegeven E6-19		
Randafstand ankers	230	mm
Minimale hoh-afstand ankers	300	mm
Anker circel buiten	1960	mm
Anker cirkel binnen	1360	mm
Omtrek ankercirkel buiten	6158	mm
Omtrek ankercirkel binnen	4273	mm
Aantal plaatsbare ankers buitenring	20	
Aantal plaatsbare ankers binnenring	14	

Afschuiving in wapening door dwarskracht **(NEN-EN 1992-1-1 Hfst. 6.2.3)**

Max. dwarskracht in segment	968	kN
Max. dwarskracht / doorsnede	959	kN
Maximale optredende afschuiving in de wand	959	kN
Hoek loodrecht dwarskracht/drukdiagonaal	30	21,8≤Θ≤45
cot Θ	2	hoek
alfa	80	
cot alfa	0.18	
Asw	113	mm2
s	200	mm
z (horende max. dwarskracht)	2430	mm
fywd	478	Mpa
VRD,S	6176	kN
Toetsing afschuiving door dwarskracht	0.16	

Toetsing betonspanning	0.85	Voldoet
Toetsing afschuiving in wand	0.16	Voldoet

Afschuiving in wapening door torsie

Maximaal torsie	14750	kNmm
Maximaal afschuiving torsie / doorsnede	15	kN
Maximaal dwarskracht bij torsie	435	kN
Max. afschuiving wand door dwarskracht	435	kN
Hoek loodrecht dwarskracht/drukdiagonaal	30	21,8≤Θ≤45
cot Θ	2	hoek
alfa	80	
cot alfa	0.18	
Asw	113	mm2
s	200	mm
z (dwarskracht)	2430	mm
z (torsie)	6063	mm
fywd	478	Mpa
VRD,max (dwarskracht)	6176	kN
VRD,max (torsie)	15409	kN
Toetsing afschuiving door dwarskracht	0.07	
Toetsing afschuiving door torsie	0.00	
Totaal	0.07	

W2HL400 Bijlage B

Segment	**2**	
Lengte	**12**	**m**
Gewicht	**73.9**	**ton**

Betonklasse	B	Voldoet
Voorspananker	FeP1860	
Nkabel; `toegepast Buiten	12	Voldoet
Nkabel; `toegepast Binnen	8	
Dwarswapening	12	rond
Materiaal	550	Fb550
Aantal ringbeugels/meter hoogte	5	Voldoet

Keuze Betonklasse	A	B	C	D
	C55/67	C70/85	C80/95	C90/105
fck	55	70	80	90
yck	1.5	1.5	1.5	1.5
fcd	-36.7	-46.7	-53.3	-60.0
Trekspanning	0	0	0	0

Optredende spanningen

Segment	2		
Ingevulde wanddikte	450		
	Voet	Top	
Buitendiameter	2420	2041	mm
Buitenomtrek	7603	6410	mm
Wanddikte	450	450	mm
Binnendiameter	1520	1141	mm
Doorsnede	Hol	Hol	
Omtrek/dikte	16.90	14.25	Verhouding
Oppervlak	2785380	2248525	mm2
Weerstandsmoment	1175145488	752686260	mm3
Maximale moment	24088	kNm	
Maximale moment + 2de orde	26497	kNm	
Maximaal dwarskracht	959	kN	
Maximaal torsiemoment	14750	kNmm	
Maximaal normaalkracht	2345	kN	
Spanning tgv normaalkracht	0.8	N/mm2	
Spanning tgv moment	22.6	N/mm2	
2de orde effect verrekening	10%		
Factor e.g	1.2		
Maximale drukspanning	-23.4	Mpa	
Toelaatbare spanning	-46.7	Komende uit betonklasse	
Maximale trekspanning	21.9	MPa	
Toelaatbare trekspanning	0.0	MPa	

Voorspanning

Benodigde voorspanning ULS	21.9	Mpa
Benodigde voorspanning SLS	18	Mpa
Benodigde voorspankracht	61053	kN
Resulterende betonspanningen		
Trekzijde	0	Mpa
Drukzijde	-45	Mpa
Na relaxatie	-40	MPa
Keuze voorspankabels	FeP1860	
Toelaatbare spanning	1200	MPa
Astreng	150	mm2
streng/kabel	19	
Akabel	2850	mm2
Benodigde voorspankracht	61053	kN
Nkabel; benodigd	18	
Nkabel; `toegepast Buiten	12	
Nkabel; `toegepast Binnen	8	
Ankerverdeling top		
Gegeven E6-19		
Randafstand ankers	230	mm
Minimale hoh-afstand ankers	300	mm
Anker circel buiten	1581	mm
Anker cirkel binnen	981	mm
Omtrek ankercirkel buiten	4965	mm
Omtrek ankercirkel binnen	3080	mm
Aantal plaatsbare ankers buitenring	16	
Aantal plaatsbare ankers binnenring	10	

Afschuiving in wapening door dwarskracht **(NEN-EN 1992-1-1 Hfst. 6.2.3)**

Max. dwarskracht in segment	959	kN
Max. dwarskracht / doorsnede	952	kN
Maximale optredende afschuiving in de wand	952	kN
Hoek loodrecht dwarskracht/drukdiagonaal	30	21,8≤Θ≤45
cot Θ	2	hoek
alfa	80	
cot alfa	0.18	
Asw	113	mm2
s	200	mm
z (horende max. dwarskracht)	2090	mm
fywd	478	Mpa
VRD,S	5312	kN
Toetsing afschuiving door dwarskracht	0.18	

Toetsing betonspanning	0.86	Voldoet
Toetsing afschuiving in wand	0.18	Voldoet

Afschuiving in wapening door torsie

Maximaal torsie	14750	kNmm
Maximaal afschuiving torsie / doorsnede	18	kN
Maximaal dwarskracht bij torsie	432	kN
Max. afschuiving wand door dwarskracht	432	kN
Hoek loodrecht dwarskracht/drukdiagonaal	30	21,8≤Θ≤45
cot Θ	2	hoek
alfa	80	
cot alfa	0.18	
Asw	113	mm2
s	200	mm
z (dwarskracht)	2090	mm
z (torsie)	5027	mm
fywd	478	Mpa
VRD,max (dwarskracht)	5312	kN
VRD,max (torsie)	12774	kN
Toetsing afschuiving door dwarskracht	0.08	
Toetsing afschuiving door torsie	0.00	
Totaal	0.08	

W2HL400 Bijlage B

Segment	**3**	
Lengte	**12**	**m**
Gewicht	**53.4**	**ton**

Betonklasse	A	Voldoet
Voorspananker	FeP1860	
Nkabel; `toegepast Buiten	10	Voldoet
Nkabel; `toegepast Binnen	4	
Dwarswapening	12	rond
Materiaal	550	Fb550
Aantal ringbeugels/meter hoogte	5	Voldoet

Keuze Betonklasse	A	B	C	D
	C55/67	C70/85	C80/95	C90/105
fck	55	70	80	90
yck	1.5	1.5	1.5	1.5
fcd	-36.7	-46.7	-53.3	-60.0
Trekspanning	0	0	0	0

Optredende spanningen

Segment	3		
Ingevulde wanddikte	400		
	Voet	Top	
Buitendiameter	2041	1661	mm
Buitenomtrek	6410	5217	mm
Wanddikte	400	400	mm
Binnendiameter	1241	861	mm
Doorsnede	Hol	Hol	
Omtrek/dikte	16.03	13.04	Verhouding
Oppervlak	2061521	1584317	mm2
Weerstandsmoment	720156381	417246712	mm3
Maximale moment	13108	kNm	
Maximale moment + 2de orde	14419	kNm	
Maximaal dwarskracht	697	kN	
Maximaal torsiemoment	14750	kNmm	
Maximaal normaalkracht	1446	kN	
Spanning tgv normaalkracht	0.7	N/mm2	
Spanning tgv moment	20.0	N/mm2	
2de orde effect verrekening	10%		
Factor e.g	1.2		
Maximale drukspanning	-20.7	Mpa	
Toelaatbare spanning	-36.7	Komende uit betonklasse	
Maximale trekspanning	19.5	MPa	
Toelaatbare trekspanning	0.0	MPa	

Voorspanning

Benodigde voorspanning ULS	19.5	Mpa
Benodigde voorspanning SLS	16	Mpa
Benodigde voorspankracht	40204	kN
Resulterende betonspanningen		
Trekzijde	0	Mpa
Drukzijde	-40	Mpa
Na relaxatie	-36	MPa
Keuze voorspankabels	FeP1860	
Toelaatbare spanning	1200	MPa
Astreng	150	mm2
streng/kabel	19	
Akabel	2850	mm2
Benodigde voorspankracht	40204	kN
Nkabel; benodigd	12	
Nkabel; `toegepast Buiten	10	
Nkabel; `toegepast Binnen	4	
Ankerverdeling top		
Gegeven E6-19		
Randafstand ankers	230	mm
Minimale hoh-afstand ankers	300	mm
Anker circel buiten	1201	mm
Anker cirkel binnen	601	mm
Omtrek ankercirkel buiten	3772	mm
Omtrek ankercirkel binnen	1887	mm
Aantal plaatsbare ankers buitenring	12	
Aantal plaatsbare ankers binnenring	6	

Afschuiving in wapening door dwarskracht **(NEN-EN 1992-1-1 Hfst. 6.2.3)**

Max. dwarskracht in segment	697	kN
Max. dwarskracht / doorsnede	691	kN
Maximale optredende afschuiving in de wand	691	kN
Hoek loodrecht dwarskracht/drukdiagonaal	30	21,8≤Θ≤45
cot Θ	2	hoek
alfa	80	
cot alfa	0.18	
Asw	113	mm2
s	200	mm
z (horende max. dwarskracht)	1770	mm
fywd	478	Mpa
VRD,S	4498	kN
Toetsing afschuiving door dwarskracht	0.15	

Toetsing betonspanning	0.98	Voldoet
Toetsing afschuiving in wand	0.15	Voldoet

Afschuiving in wapening door torsie

Maximaal torsie	14750	kNmm
Maximaal afschuiving torsie / doorsnede	23	kN
Maximaal dwarskracht bij torsie	313	kN
Max. afschuiving wand door dwarskracht	313	kN
Hoek loodrecht dwarskracht/drukdiagonaal	30	21,8≤Θ≤45
cot Θ	2	hoek
alfa	80	
cot alfa	0.18	
Asw	113	mm2
s	200	mm
z (dwarskracht)	1770	mm
z (torsie)	3990	mm
fywd	478	Mpa
VRD,max (dwarskracht)	4498	kN
VRD,max (torsie)	10140	kN
Toetsing afschuiving door dwarskracht	0.07	
Toetsing afschuiving door torsie	0.00	
Totaal	0.07	

W2HL400 Bijlage B

Segment	**4**	
Lengte	**12**	**m**
Gewicht	**32.3**	**ton**

Betonklasse	A	Voldoet
Voorspananker	FeP1860	
Nkabel; `toegepast Buiten	6	Voldoet
Nkabel; `toegepast Binnen	2	
Dwarswapening	12	rond
Materiaal	550	Fb550
Aantal ringbeugels/meter hoogte	5	Voldoet

Keuze Betonklasse	A	B	C	D
	C55/67	C70/85	C80/95	C90/105
fck	55	70	80	90
yck	1.5	1.5	1.5	1.5
fcd	-36.7	-46.7	-53.3	-60.0
Trekspanning	0	0	0	0
	0			
	0			

Optredende spanningen

Segment	4		
Ingevulde wanddikte	300		
	Voet	Top	
Buitendiameter	1661	1281	mm
Buitenomtrek	5217	4024	mm
Wanddikte	300	300	mm
Binnendiameter	1061	681	mm
Doorsnede	Hol	Hol	
Omtrek/dikte	17.39	13.41	Verhouding
Oppervlak	1282486	924583	mm2
Weerstandsmoment	374852473	189892285	mm3
Maximale moment	5714	kNm	
Maximale moment + 2de orde	6286	kNm	
Maximaal dwarskracht	446	kN	
Maximaal torsiemoment	14750	kNmm	
Maximaal normaalkracht	759	kN	
Spanning tgv normaalkracht	0.6	N/mm2	
Spanning tgv moment	16.8	N/mm2	
2de orde effect verrekening	10%		
Factor e.g	1.2		
Maximale drukspanning	-17.4	Mpa	
Toelaatbare spanning	-36.7	Komende uit betonklasse	
Maximale trekspanning	16.3	MPa	
Toelaatbare trekspanning	0.0	MPa	

Voorspanning

Benodigde voorspanning ULS	16.3	Mpa
Benodigde voorspanning SLS	14	Mpa
Benodigde voorspankracht	20949	kN
Resulterende betonspanningen		
Trekzijde	0	Mpa
Drukzijde	-34	Mpa
Na relaxatie	-30	MPa
Keuze voorspankabels	FeP1860	
Toelaatbare spanning	1200	MPa
Astreng	150	mm2
streng/kabel	19	
Akabel	2850	mm2
Benodigde voorspankracht	20949	kN
Nkabel; benodigd	7	
Nkabel; `toegepast Buiten	6	
Nkabel; `toegepast Binnen	2	
Ankerverdeling top		
Gegeven E6-19		
Randafstand ankers	230	mm
Minimale hoh-afstand ankers	300	mm
Anker circel buiten	821	mm
Anker cirkel binnen	221	mm
Omtrek ankercirkel buiten	2579	mm
Omtrek ankercirkel binnen	694	mm
Aantal plaatsbare ankers buitenring	8	
Aantal plaatsbare ankers binnenring	2	

Afschuiving in wapening door dwarskracht **(NEN-EN 1992-1-1 Hfst. 6.2.3)**

Max. dwarskracht in segment	446	kN
Max. dwarskracht / doorsnede	442	kN
Maximale optredende afschuiving in de wand	442	kN
Hoek loodrecht dwarskracht/drukdiagonaal	30	21,8≤Θ≤45
cot Θ	2	hoek
alfa	80	
cot alfa	0.18	
Asw	113	mm2
s	200	mm
z (horende max. dwarskracht)	1430	mm
fywd	478	Mpa
VRD,S	3634	kN
Toetsing afschuiving door dwarskracht	0.12	

Toetsing betonspanning	0.83	Voldoet
Toetsing afschuiving in wand	0.12	Voldoet

Afschuiving in wapening door torsie

Maximaal torsie	14750	kNmm
Maximaal afschuiving torsie / doorsned	30	kN
Maximaal dwarskracht bij torsie	201	kN
Max. afschuiving wand door dwarskrac	201	kN
Hoek loodrecht dwarskracht/drukdiago	30	21,8≤Θ≤45
cot Θ	2	hoek
alfa	80	
cot alfa	0.18	
Asw	113	mm2
s	200	mm
z (dwarskracht)	1430	mm
z (torsie)	3110	mm
fywd	478	Mpa
VRD,max (dwarskracht)	3634	kN
VRD,max (torsie)	7904	kN
Toetsing afschuiving door dwarskracht	0.06	
Toetsing afschuiving door torsie	0.00	
Totaal	0.06	

W2HL400 Bijlage B

Segment	**5**	
Lengte	**12**	**m**
Gewicht	**18.1**	**ton**

Betonklasse	A	Voldoet
Voorspananker	FeP1860	
Nkabel; `toegepast Buiten	4	Voldoet
Nkabel; `toegepast Binnen	0	
Dwarswapening	12	rond
Materiaal	550	Fb550
Aantal ringbeugels/meter hoogte	5	Voldoet

Keuze Betonklasse	A	B	C	D
	C55/67	C70/85	C80/95	C90/105
fck	55	70	80	90
yck	1.5	1.5	1.5	1.5
fcd	-36.7	-46.7	-53.3	-60.0
Trekspanning	0	0	0	0

Optredende spanningen

Segment	5		
Ingevulde wanddikte	200		
	Voet	Top	
Buitendiameter	1281	901	mm
Buitenomtrek	4024	2831	mm
Wanddikte	200	200	mm
Binnendiameter	881	501	mm
Doorsnede	Hol	Hol	
Omtrek/dikte	20.12	14.16	Verhouding
Oppervlak	679220	440618	mm2
Weerstandsmoment	160204845	64994491	mm3
Maximale moment	1650	kNm	
Maximale moment + 2de orde	1815	kNm	
Maximaal dwarskracht	192	kN	
Maximaal torsiemoment	14750	kNmm	
Maximaal normaalkracht	321	kN	
Spanning tgv normaalkracht	0.5	N/mm2	
Spanning tgv moment	11.4	N/mm2	
2de orde effect verrekening	10%		
Factor e.g	1.2		
Maximale drukspanning	-11.8	Mpa	
Toelaatbare spanning	-36.7	Komende uit betonklasse	
Maximale trekspanning	10.9	MPa	
Toelaatbare trekspanning	0.0	MPa	

Voorspanning

Benodigde voorspanning ULS	10.9	Mpa
Benodigde voorspanning SLS	9	Mpa
Benodigde voorspankracht	7462	kN
Resulterende betonspanningen		
Trekzijde	0	Mpa
Drukzijde	-23	Mpa
Na relaxatie	-20	MPa
Keuze voorspankabels	FeP1860	
Toelaatbare spanning	1200	MPa
Astreng	150	mm2
streng/kabel	19	
Akabel	2850	mm2
Benodigde voorspankracht	7462	kN
Nkabel; benodigd	3	
Nkabel; `toegepast Buiten	4	
Nkabel; `toegepast Binnen	0	
Ankerverdeling top		
Gegeven E6-19		
Randafstand ankers	230	mm
Minimale hoh-afstand ankers	300	mm
Anker circel buiten	441	mm
Anker cirkel binnen	-159	mm
Omtrek ankercirkel buiten	1386	mm
Omtrek ankercirkel binnen	-499	mm
Aantal plaatsbare ankers buitenring	4	
Aantal plaatsbare ankers binnenring	-1	

Afschuiving in wapening door dwarskracht **(NEN-EN 1992-1-1 Hfst. 6.2.3)**

Max. dwarskracht in segment		192	kN
Max. dwarskracht / doorsnede		190	kN
Maximale optredende afschuiving in de wand		190	kN
Hoek loodrecht dwarskracht/drukdiagonaal		30	21,8≤Θ≤45
cot Θ		2	hoek
alfa		80	
cot alfa		0.18	
Asw		113	mm2
s		200	mm
z (horende max. dwarskracht)		1110	mm
fywd		478	Mpa
VRD,S		2821	kN
Toetsing afschuiving door dwarskracht		0.07	0
	0	0	0

Toetsing betonspanning	0.56	Voldoet
Toetsing afschuiving in wand	0.07	Voldoet

Afschuiving in wapening door torsie

Maximaal torsie	14750	kNmm
Maximaal afschuiving torsie / doorsned	42	kN
Maximaal dwarskracht bij torsie	87	kN
Max. afschuiving wand door dwarskra	87	kN
Hoek loodrecht dwarskracht/drukdiago	30	21,8≤Θ≤45
cot Θ	2	hoek
alfa	80	
cot alfa	0.18	
Asw	113	mm2
s	200	mm
z (dwarskracht)	1110	mm
z (torsie)	2231	mm
fywd	478	Mpa
VRD,max (dwarskracht)	2821	kN
VRD,max (torsie)	5669	kN
Toetsing afschuiving door dwarskracht	0.03	
Toetsing afschuiving door torsie	0.01	
Totaal	0.04	

W2HL400 Bijlage B

Segment	**6**	
Lengte	**3.2**	**m**
Gewicht	**4.4**	**ton**

Betonklasse	A	Voldoet
Voorspananker	FeP1860	
Nkabel; `toegepast Buiten	2	Voldoet
Nkabel; `toegepast Binnen	0	
Dwarswapening	12	rond
Materiaal	550	Fb550
Aantal ringbeugels/meter hoogte	5	Voldoet

Keuze Betonklasse	A	B	C	D
	C55/67	C70/85	C80/95	C90/105
fck	55	70	80	90
yck	1.5	1.5	1.5	1.5
fcd	-36.7	-46.7	-53.3	-60.0
Trekspanning	0	0	0	0

Optredende spanningen

Segment	6		
Ingevulde wanddikte	150		
	Voet	Top	
Buitendiameter	901	800	mm
Buitenomtrek	2831	2513	mm
Wanddikte	150	150	mm
Binnendiameter	601	500	mm
Doorsnede	Hol	Hol	
Omtrek/dikte	18.88	16.76	Verhouding
Oppervlak	354026	306305	mm2
Weerstandsmoment	57634991	42595579	mm3
Maximale moment	209	kNm	
Maximale moment + 2de orde	230	kNm	
Maximaal dwarskracht	67	kN	
Maximaal torsiemoment	14750	kNmm	
Maximaal normaalkracht	70	kN	
Spanning tgv normaalkracht	0.1	N/mm2	
Spanning tgv moment	16.8	N/mm2	
2de orde effect verrekening	10%		
Factor e.g	1.2		
Maximale drukspanning	-16.9	Mpa	
Toelaatbare spanning	-36.7	Komende uit betonklasse	
Maximale trekspanning	16.7	MPa	
Toelaatbare trekspanning	0.0	MPa	

Voorspanning

Benodigde voorspanning ULS	16.7	Mpa
Benodigde voorspanning SLS	14	Mpa
Benodigde voorspankracht	1995	kN
Resulterende betonspanningen		
Trekzijde	0	Mpa
Drukzijde	-34	Mpa
Na relaxatie	-31	MPa
Keuze voorspankabels	FeP1860	
Toelaatbare spanning	1200	MPa
Astreng	150	mm2
streng/kabel	19	
Akabel	2850	mm2
Benodigde voorspankracht	1995	kN
Nkabel; benodigd	1	
Nkabel; `toegepast Buiten	2	
Nkabel; `toegepast Binnen	0	
Ankerverdeling top		
Gegeven E6-19		
Randafstand ankers	230	mm
Minimale hoh-afstand ankers	300	mm
Anker circel buiten	340	mm
Anker cirkel binnen	-260	mm
Omtrek ankercirkel buiten	1068	mm
Omtrek ankercirkel binnen	-817	mm
Aantal plaatsbare ankers buitenring	3	
Aantal plaatsbare ankers binnenring	-2	

Afschuiving in wapening door dwarskracht **(NEN-EN 1992-1-1 Hfst. 6.2.3)**

Max. dwarskracht in segment	67	kN
Max. dwarskracht / doorsnede	66	kN
Maximale optredende afschuiving in de wand	66	kN
Hoek loodrecht dwarskracht/drukdiagonaal	30	21,8≤Θ≤45
cot Θ	2	hoek
alfa	80	
cot alfa	0.18	
Asw	113	mm2
s	200	mm
z (horende max. dwarskracht)	800	mm
fywd	478	Mpa
VRD,S	2033	kN
Toetsing afschuiving door dwarskracht	0.03	

Toetsing betonspanning	0.84	Voldoet
Toetsing afschuiving in wand	0.03	Voldoet

Afschuiving in wapening door torsie

Maximaal torsie	14750	kNmm
Maximaal afschuiving torsie / doorsnec	45	kN
Maximaal dwarskracht bij torsie	30	kN
Max. afschuiving wand door dwarskra	30	kN
Hoek loodrecht dwarskracht/drukdiago	30	21,8≤Θ≤45
cot Θ	2	hoek
alfa	80	
cot alfa	0.18	
Asw	113	mm2
s	200	mm
z (dwarskracht)	800	mm
z (torsie)	2042	mm
fywd	478	Mpa
VRD,max (dwarskracht)	2033	kN
VRD,max (torsie)	5190	kN
Toetsing afschuiving door dwarskracht	0.01	
Toetsing afschuiving door torsie	0.01	
Totaal	0.02	

W2S400 Bijlage A

Segment	**1**	
Lengte	**12**	**m**
Gewicht	**61.0**	**ton**

Betonklasse	A	Voldoet
Voorspananker	FeP1860	
Nkabel; `toegepast Buiten	12	Voldoet
Nkabel; `toegepast Binnen	8	
Dwarswapening	12	rond
Materiaal	550	Fb550
Aantal ringbeugels/meter hoogte	5	Voldoet

Keuze Betonklasse	A	B	C	D
	C55/67	C70/85	C80/95	C90/105
fck	55	70	80	90
yck	1.5	1.5	1.5	1.5
fcd	-36.7	-46.7	-53.3	-60.0
Trekspanning	0	0	0	0

Optredende spanningen

Segment	1		
Ingevulde wanddikte	400		
	Voet	Top	
Buitendiameter	2200	1893	mm
Buitenomtrek	6912	5948	mm
Wanddikte	400	400	mm
Binnendiameter	1400	1093	mm
Doorsnede	Hol	Hol	
Omtrek/dikte	17.28	14.87	Verhouding
Oppervlak	2261947	1876700	mm2
Weerstandsmoment	873933956	592303534	mm3
Maximale moment	13055	kNm	
Maximale moment + 2de orde	14361	kNm	
Maximaal dwarskracht	366	kN	
Maximaal torsiemoment	0	kNmm	
Maximaal normaalkracht	2078	kN	
Spanning tgv normaalkracht	0.9	N/mm2	
Spanning tgv moment	16.5	N/mm2	
2de orde effect verrekening	10%		
Factor e.g	1.2		
Maximale drukspanning	-17.4	Mpa	
Toelaatbare spanning	-36.7	Komende uit betonklasse	
Maximale trekspanning	15.8	MPa	
Toelaatbare trekspanning	0.0	MPa	

Voorspanning

Benodigde voorspanning ULS	15.8	Mpa
Benodigde voorspanning SLS	11	Mpa
Benodigde voorspankracht	35610	kN
Resulterende betonspanningen		
Trekzijde	0	Mpa
Drukzijde	-33	Mpa
Na relaxatie	-29	MPa
Keuze voorspankabels	FeP1860	
Toelaatbare spanning	1200	MPa
Astreng	150	mm2
streng/kabel	19	
Akabel	2850	mm2
Benodigde voorspankracht	35610	kN
Nkabel; benodigd	11	
Nkabel; `toegepast Buiten	12	
Nkabel; `toegepast Binnen	8	
Ankerverdeling top		
Gegeven E6-19		
Randafstand ankers	230	mm
Minimale hoh-afstand ankers	300	mm
Anker circel buiten	1433	mm
Anker cirkel binnen	833	mm
Omtrek ankercirkel buiten	4503	mm
Omtrek ankercirkel binnen	2618	mm
Aantal plaatsbare ankers buitenring	15	
Aantal plaatsbare ankers binnenring	8	

Afschuiving in wapening door dwarskracht **(NEN-EN 1992-1-1 Hfst. 6.2.3)**

Max. dwarskracht in segment	366	kN
Max. dwarskracht / doorsnede	345	kN
Maximale optredende afschuiving in de wand	345	kN
Hoek loodrecht dwarskracht/drukdiagonaal	30	21,8≤Θ≤45
cot Θ	2	hoek
alfa	80	
cot alfa	0.18	
Asw	113	mm2
s	200	mm
z (horende max. dwarskracht)	1899	mm
fywd	478	Mpa
VRD,S	4826	kN
Toetsing afschuiving door dwarskracht	0.07	

Toetsing betonspanning	0.80	Voldoet
Toetsing afschuiving in wand	0.07	Voldoet

Afschuiving in wapening door torsie

Maximaal torsie	0	kNmm
Maximaal afschuiving torsie / doorsnede	0	kN
Maximaal dwarskracht bij torsie	0	kN
Max. afschuiving wand door dwarskracht	0	kN
Hoek loodrecht dwarskracht/drukdiagonaal	30	21,8≤Θ≤45
cot Θ	2	hoek
alfa	80	
cot alfa	0.18	
Asw	113	mm2
s	200	mm
z (dwarskracht)	1899	mm
z (torsie)	1257	mm
fywd	478	Mpa
VRD,max (dwarskracht)	4826	kN
VRD,max (torsie)	3194	kN
Toetsing afschuiving door dwarskracht	0.00	
Toetsing afschuiving door torsie	0.00	
Totaal	0.00	

W2S400 Bijlage A

Segment	**2**	
Lengte	**12**	**m**
Gewicht	**45.0**	**ton**

Betonklasse	A	Voldoet
Voorspananker	FeP1860	
Nkabel; `toegepast Buiten	10	Voldoet
Nkabel; `toegepast Binnen	4	
Dwarswapening	12	rond
Materiaal	550	Fb550
Aantal ringbeugels/meter hoogte	5	Voldoet

Keuze Betonklasse	A	B	C	D
	C55/67	C70/85	C80/95	C90/105
fck	55	70	80	90
yck	1.5	1.5	1.5	1.5
fcd	-36.7	-46.7	-53.3	-60.0
Trekspanning	0	0	0	0

Optredende spanningen

Segment	2		
Ingevulde wanddikte	350		
	Voet	Top	
Buitendiameter	1893	1587	mm
Buitenomtrek	5948	4985	mm
Wanddikte	350	350	mm
Binnendiameter	1193	887	mm
Doorsnede	Hol	Hol	
Omtrek/dikte	17.00	14.24	Verhouding
Oppervlak	1697091	1360000	mm2
Weerstandsmoment	561238659	354026419	mm3
Maximale moment	8783	kNm	
Maximale moment + 2de orde	9661	kNm	
Maximaal dwarskracht	344	kN	
Maximaal torsiemoment	0	kNmm	
Maximaal normaalkracht	1360	kN	
Spanning tgv normaalkracht	0.8	N/mm2	
Spanning tgv moment	17.2	N/mm2	
2de orde effect verrekening	10%		
Factor e.g	1.2		
Maximale drukspanning	-18.0	Mpa	
Toelaatbare spanning	-36.7	Komende uit betonklasse	
Maximale trekspanning	16.6	MPa	
Toelaatbare trekspanning	0.0	MPa	

Voorspanning

Benodigde voorspanning ULS	16.6	Mpa
Benodigde voorspanning SLS	11	Mpa
Benodigde voorspankracht	28224	kN
Resulterende betonspanningen		
Trekzijde	0	Mpa
Drukzijde	-35	Mpa
Na relaxatie	-30	MPa
Keuze voorspankabels	FeP1860	
Toelaatbare spanning	1200	MPa
Astreng	150	mm2
streng/kabel	19	
Akabel	2850	mm2
Benodigde voorspankracht	28224	kN
Nkabel; benodigd	9	
Nkabel; `toegepast Buiten	10	
Nkabel; `toegepast Binnen	4	
Ankerverdeling top		
Gegeven E6-19		
Randafstand ankers	230	mm
Minimale hoh-afstand ankers	300	mm
Anker circel buiten	1127	mm
Anker cirkel binnen	527	mm
Omtrek ankercirkel buiten	3540	mm
Omtrek ankercirkel binnen	1655	mm
Aantal plaatsbare ankers buitenring	11	
Aantal plaatsbare ankers binnenring	5	

Afschuiving in wapening door dwarskracht **(NEN-EN 1992-1-1 Hfst. 6.2.3)**

Max. dwarskracht in segment	344	kN
Max. dwarskracht / doorsnede	322	kN
Maximale optredende afschuiving in de wand	322	kN
Hoek loodrecht dwarskracht/drukdiagonaal	30	21,8≤Θ≤45
cot Θ	2	hoek
alfa	80	
cot alfa	0.18	
Asw	113	mm2
s	200	mm
z (horende max. dwarskracht)	1591	mm
fywd	478	Mpa
VRD,S	4043	kN
Toetsing afschuiving door dwarskracht	0.08	

Toetsing betonspanning	0.83	Voldoet
Toetsing afschuiving in wand	0.08	Voldoet

Afschuiving in wapening door torsie

Maximaal torsie	0	kNmm
Maximaal afschuiving torsie / doorsnede	0	kN
Maximaal dwarskracht bij torsie	0	kN
Max. afschuiving wand door dwarskracht	0	kN
Hoek loodrecht dwarskracht/drukdiagonaal	30	21,8≤Θ≤45
cot Θ	2	hoek
alfa	80	
cot alfa	0.18	
Asw	113	mm2
s	200	mm
z (dwarskracht)	1591	mm
z (torsie)	1414	mm
fywd	478	Mpa
VRD,max (dwarskracht)	4043	kN
VRD,max (torsie)	3593	kN
Toetsing afschuiving door dwarskracht	0.00	
Toetsing afschuiving door torsie	0.00	
Totaal	0.00	

W2S400 Bijlage A

Segment	**3**	
Lengte	**12**	**m**
Gewicht	**31.4**	**ton**

Betonklasse	A	Voldoet
Voorspananker	FeP1860	
Nkabel; `toegepast Buiten	6	Voldoet
Nkabel; `toegepast Binnen	2	
Dwarswapening	12	rond
Materiaal	550	Fb550
Aantal ringbeugels/meter hoogte	5	Voldoet

Keuze Betonklasse	A	B	C	D
	C55/67	C70/85	C80/95	C90/105
fck	55	70	80	90
yck	1.5	1.5	1.5	1.5
fcd	-36.7	-46.7	-53.3	-60.0
Trekspanning	0	0	0	0

Optredende spanningen

Segment	3		
Ingevulde wanddikte	300		
	Voet	Top	
Buitendiameter	1587	1280	mm
Buitenomtrek	4985	4022	mm
Wanddikte	300	300	mm
Binnendiameter	987	680	mm
Doorsnede	Hol	Hol	
Omtrek/dikte	16.62	13.41	Verhouding
Oppervlak	1212838	923903	mm2
Weerstandsmoment	333619282	189604591	mm3
Maximale moment	4793	kNm	
Maximale moment + 2de orde	5273	kNm	
Maximaal dwarskracht	300	kN	
Maximaal torsiemoment	0	kNmm	
Maximaal normaalkracht	821	kN	
Spanning tgv normaalkracht	0.7	N/mm2	
Spanning tgv moment	15.9	N/mm2	
2de orde effect verrekening	10%		
Factor e.g	1.2		
Maximale drukspanning	-16.6	Mpa	
Toelaatbare spanning	-36.7	Komende uit betonklasse	
Maximale trekspanning	15.4	MPa	
Toelaatbare trekspanning	0.0	MPa	

Voorspanning

Benodigde voorspanning ULS	15.4	Mpa
Benodigde voorspanning SLS	11	Mpa
Benodigde voorspankracht	18598	kN
Resulterende betonspanningen		
Trekzijde	0	Mpa
Drukzijde	-32	Mpa
Na relaxatie	-29	MPa
Keuze voorspankabels	FeP1860	
Toelaatbare spanning	1200	MPa
Astreng	150	mm2
streng/kabel	19	
Akabel	2850	mm2
Benodigde voorspankracht	18598	kN
Nkabel; benodigd	6	
Nkabel; `toegepast Buiten	6	
Nkabel; `toegepast Binnen	2	
Ankerverdeling top		
Gegeven E6-19		
Randafstand ankers	230	mm
Minimale hoh-afstand ankers	300	mm
Anker circel buiten	820	mm
Anker cirkel binnen	220	mm
Omtrek ankercirkel buiten	2577	mm
Omtrek ankercirkel binnen	692	mm
Aantal plaatsbare ankers buitenring	8	
Aantal plaatsbare ankers binnenring	2	

Afschuiving in wapening door dwarskracht **(NEN-EN 1992-1-1 Hfst. 6.2.3)**

Max. dwarskracht in segment	300	kN
Max. dwarskracht / doorsnede	292	kN
Maximale optredende afschuiving in de wand	292	kN
Hoek loodrecht dwarskracht/drukdiagonaal	30	21,8≤Θ≤45
cot Θ	2	hoek
alfa	80	
cot alfa	0.18	
Asw	113	mm2
s	200	mm
z (horende max. dwarskracht)	1465	mm
fywd	478	Mpa
VRD,S	3723	kN
Toetsing afschuiving door dwarskracht	0.08	

Toetsing betonspanning	0.78	Voldoet
Toetsing afschuiving in wand	0.08	Voldoet

Afschuiving in wapening door torsie

Maximaal torsie	0	kNmm
Maximaal afschuiving torsie / doorsnede	0	kN
Maximaal dwarskracht bij torsie	0	kN
Max. afschuiving wand door dwarskracht	0	kN
Hoek loodrecht dwarskracht/drukdiagonaal	30	21,8≤Θ≤45
cot Θ	2	hoek
alfa	80	
cot alfa	0.18	
Asw	113	mm2
s	200	mm
z (dwarskracht)	1465	mm
z (torsie)	1571	mm
fywd	478	Mpa
VRD,max (dwarskracht)	3723	kN
VRD,max (torsie)	3992	kN
Toetsing afschuiving door dwarskracht	0.00	
Toetsing afschuiving door torsie	0.00	
Totaal	0.00	

W2S400 Bijlage A

Segment	**4**	
Lengte	**12**	**m**
Gewicht	**20.2**	**ton**

Betonklasse	A	Voldoet
Voorspananker	FeP1860	
Nkabel; `toegepast Buiten	4	Voldoet
Nkabel; `toegepast Binnen	0	
Dwarswapening	12	rond
Materiaal	550	Fb550
Aantal ringbeugels/meter hoogte	5	Voldoet

Keuze Betonklasse	A	B	C	D
	C55/67	C70/85	C80/95	C90/105
fck	55	70	80	90
yck	1.5	1.5	1.5	1.5
fcd	-36.7	-46.7	-53.3	-60.0
Trekspanning	0	0	0	0
	0			
	0			

Optredende spanningen

Segment	4		
Ingevulde wanddikte	250		
	Voet	Top	
Buitendiameter	1280	974	mm
Buitenomtrek	4022	3059	mm
Wanddikte	250	250	mm
Binnendiameter	780	474	mm
Doorsnede	Hol	Hol	
Omtrek/dikte	16.09	12.24	Verhouding
Oppervlak	809189	568410	mm2
Weerstandsmoment	177602098	85559402	mm3
Maximale moment	1857	kNm	
Maximale moment + 2de orde	2042	kNm	
Maximaal dwarskracht	208	kN	
Maximaal torsiemoment	0	kNmm	
Maximaal normaalkracht	418	kN	
Spanning tgv normaalkracht	0.5	N/mm2	
Spanning tgv moment	11.6	N/mm2	
2de orde effect verrekening	10%		
Factor e.g	1.2		
Maximale drukspanning	-12.1	Mpa	
Toelaatbare spanning	-36.7	Komende uit betonklasse	
Maximale trekspanning	11.2	MPa	
Toelaatbare trekspanning	0.0	MPa	

Voorspanning

Benodigde voorspanning ULS	11.2	Mpa
Benodigde voorspanning SLS	8	Mpa
Benodigde voorspankracht	9035	kN
Resulterende betonspanningen		
Trekzijde	0	Mpa
Drukzijde	-23	Mpa
Na relaxatie	-21	MPa
Keuze voorspankabels	FeP1860	
Toelaatbare spanning	1200	MPa
Astreng	150	mm2
streng/kabel	19	
Akabel	2850	mm2
Benodigde voorspankracht	9035	kN
Nkabel; benodigd	3	
Nkabel; `toegepast Buiten	4	
Nkabel; `toegepast Binnen	0	
Ankerverdeling top		
Gegeven E6-19		
Randafstand ankers	230	mm
Minimale hoh-afstand ankers	300	mm
Anker circel buiten	514	mm
Anker cirkel binnen	-86	mm
Omtrek ankercirkel buiten	1614	mm
Omtrek ankercirkel binnen	-271	mm
Aantal plaatsbare ankers buitenring	5	
Aantal plaatsbare ankers binnenring	0	

Afschuiving in wapening door dwarskracht **(NEN-EN 1992-1-1 Hfst. 6.2.3)**

Max. dwarskracht in segment	208	kN
Max. dwarskracht / doorsnede	203	kN
Maximale optredende afschuiving in de wand	203	kN
Hoek loodrecht dwarskracht/drukdiagonaal	30	21,8≤Θ≤45
cot Θ	2	hoek
alfa	80	
cot alfa	0.18	
Asw	113	mm2
s	200	mm
z (horende max. dwarskracht)	1199	mm
fywd	478	Mpa
VRD,S	3047	kN
Toetsing afschuiving door dwarskracht	0.07	

Toetsing betonspanning	0.58	Voldoet
Toetsing afschuiving in wand	0.07	Voldoet

Afschuiving in wapening door torsie

Maximaal torsie	0	kNmm
Maximaal afschuiving torsie / doorsned	0	kN
Maximaal dwarskracht bij torsie	0	kN
Max. afschuiving wand door dwarskrac	0	kN
Hoek loodrecht dwarskracht/drukdiago	30	21,8≤Θ≤45
cot Θ	2	hoek
alfa	80	
cot alfa	0.18	
Asw	113	mm2
s	200	mm
z (dwarskracht)	1199	mm
z (torsie)	1728	mm
fywd	478	Mpa
VRD,max (dwarskracht)	3047	kN
VRD,max (torsie)	4391	kN
Toetsing afschuiving door dwarskracht	0.00	
Toetsing afschuiving door torsie	0.00	
Totaal	0.00	

W2S400 Bijlage A

Segment	**5**	
Lengte	**6.8**	**m**
Gewicht	**9.1**	**ton**

Betonklasse	A	Voldoet
Voorspananker	FeP1860	
Nkabel; `toegepast Buiten	2	Voldoet
Nkabel; `toegepast Binnen	0	
Dwarswapening	12	rond
Materiaal	550	Fb550
Aantal ringbeugels/meter hoogte	5	Voldoet

Keuze Betonklasse	A	B	C	D
	C55/67	C70/85	C80/95	C90/105
fck	55	70	80	90
yck	1.5	1.5	1.5	1.5
fcd	-36.7	-46.7	-53.3	-60.0
Trekspanning	0	0	0	0

Optredende spanningen

Segment	5		
Ingevulde wanddikte	200		
	Voet	Top	
Buitendiameter	974	800	mm
Buitenomtrek	3059	2513	mm
Wanddikte	200	200	mm
Binnendiameter	574	400	mm
Doorsnede	Hol	Hol	
Omtrek/dikte	15.30	12.57	Verhouding
Oppervlak	486144	376991	mm2
Weerstandsmoment	79713263	47123890	mm3
Maximale moment	212	kNm	
Maximale moment + 2de orde	233	kNm	
Maximaal dwarskracht	110	kN	
Maximaal torsiemoment	0	kNmm	
Maximaal normaalkracht	146	kN	
Spanning tgv normaalkracht	0.3	N/mm2	
Spanning tgv moment	3.0	N/mm2	
2de orde effect verrekening	10%		
Factor e.g	1.2		
Maximale drukspanning	-3.3	Mpa	
Toelaatbare spanning	-36.7	Komende uit betonklasse	
Maximale trekspanning	2.7	MPa	
Toelaatbare trekspanning	0.0	MPa	

Voorspanning

Benodigde voorspanning ULS	2.7	Mpa
Benodigde voorspanning SLS	2	Mpa
Benodigde voorspankracht	1325	kN
Resulterende betonspanningen		
Trekzijde	0	Mpa
Drukzijde	-6	Mpa
Na relaxatie	-6	MPa
Keuze voorspankabels	FeP1860	
Toelaatbare spanning	1200	MPa
Astreng	150	mm2
streng/kabel	19	
Akabel	2850	mm2
Benodigde voorspankracht	1325	kN
Nkabel; benodigd	1	
Nkabel; `toegepast Buiten	2	
Nkabel; `toegepast Binnen	0	
Ankerverdeling top		
Gegeven E6-19		
Randafstand ankers	230	mm
Minimale hoh-afstand ankers	300	mm
Anker circel buiten	340	mm
Anker cirkel binnen	-260	mm
Omtrek ankercirkel buiten	1068	mm
Omtrek ankercirkel binnen	-817	mm
Aantal plaatsbare ankers buitenring	3	
Aantal plaatsbare ankers binnenring	-2	

Afschuiving in wapening door dwarskracht **(NEN-EN 1992-1-1 Hfst. 6.2.3)**

Max. dwarskracht in segment		110	kN
Max. dwarskracht / doorsnede		108	kN
Maximale optredende afschuiving in de wand		108	kN
Hoek loodrecht dwarskracht/drukdiagonaal		30	21,8≤Θ≤45
cot Θ		2	hoek
alfa		80	
cot alfa		0.18	
Asw		113	mm2
s		200	mm
z (horende max. dwarskracht)		933	mm
fywd		478	Mpa
VRD,S		2371	kN
Toetsing afschuiving door dwarskracht		0.05	0
	0	0	0

Toetsing betonspanning	0.15	Voldoet
Toetsing afschuiving in wand	0.05	Voldoet

Afschuiving in wapening door torsie

Maximaal torsie	0	kNmm
Maximaal afschuiving torsie / doorsned	0	kN
Maximaal dwarskracht bij torsie	0	kN
Max. afschuiving wand door dwarskra	0	kN
Hoek loodrecht dwarskracht/drukdiago	30	21,8≤Θ≤45
cot Θ	2	hoek
alfa	80	
cot alfa	0.18	
Asw	113	mm2
s	200	mm
z (dwarskracht)	933	mm
z (torsie)	1885	mm
fywd	478	Mpa
VRD,max (dwarskracht)	2371	kN
VRD,max (torsie)	4790	kN
Toetsing afschuiving door dwarskracht	0.00	
Toetsing afschuiving door torsie	0.00	
Totaal	0.00	

W4HK450 Bijlage H

Segment	**1**	
Lengte	**12**	**m**
Gewicht	**120.1**	**ton**

Betonklasse	B	Voldoet
Voorspananker	FeP1860	
Nkabel; `toegepast Buiten	20	Voldoet
Nkabel; `toegepast Binnen	8	
Dwarswapening	12	rond
Materiaal	550	Fb550
Aantal ringbeugels/meter hoogte	5	Voldoet

Keuze Betonklasse	A	B	C	D
	C55/67	C70/85	C80/95	C90/105
fck	55	70	80	90
yck	1.5	1.5	1.5	1.5
fcd	-36.7	-46.7	-53.3	-60.0
Trekspanning	0	0	0	0

Optredende spanningen

Segment	1		
Ingevulde wanddikte	500		
	Voet	Top	
Buitendiameter	3300	2878	mm
Buitenomtrek	10367	9042	mm
Wanddikte	500	500	mm
Binnendiameter	2300	1878	mm
Doorsnede	Hol	Hol	
Omtrek/dikte	20.73	18.08	Verhouding
Oppervlak	4398230	3735446	mm2
Weerstandsmoment	2695581697	1916085365	mm3
Maximale moment	52192	kNm	
Maximale moment + 2de orde	57412	kNm	
Maximaal dwarskracht	1146	kN	
Maximaal torsiemoment	1736695	kNmm	
Maximaal normaalkracht	4485	kN	
Spanning tgv normaalkracht	1.0	N/mm2	
Spanning tgv moment	22.2	N/mm2	
2de orde effect verrekening	10%		
Factor e.g	1.2		
Maximale drukspanning	-23.2	Mpa	
Toelaatbare spanning	-46.7	Komende uit betonklasse	
Maximale trekspanning	21.4	MPa	
Toelaatbare trekspanning	0.0	MPa	

Voorspanning

Benodigde voorspanning ULS	21.4	Mpa
Benodigde voorspanning SLS	16	Mpa
Benodigde voorspankracht	90312	kN
Resulterende betonspanningen		
Trekzijde	0	Mpa
Drukzijde	-45	Mpa
Na relaxatie	-41	MPa
Keuze voorspankabels	FeP1860	
Toelaatbare spanning	1200	MPa
Astreng	150	mm2
streng/kabel	19	
Akabel	2850	mm2
Benodigde voorspankracht	90312	kN
Nkabel; benodigd	27	
Nkabel; `toegepast Buiten	20	
Nkabel; `toegepast Binnen	8	
Ankerverdeling top		
Gegeven E6-19		
Randafstand ankers	230	mm
Minimale hoh-afstand ankers	300	mm
Anker circel buiten	2418	mm
Anker cirkel binnen	1818	mm
Omtrek ankercirkel buiten	7597	mm
Omtrek ankercirkel binnen	5712	mm
Aantal plaatsbare ankers buitenring	25	
Aantal plaatsbare ankers binnenring	19	

Afschuiving in wapening door dwarskracht **(NEN-EN 1992-1-1 Hfst. 6.2.3)**

Max. dwarskracht in segment	1146	kN
Max. dwarskracht / doorsnede	1113	kN
Maximale optredende afschuiving in de wand	1113	kN
Hoek loodrecht dwarskracht/drukdiagonaal	30	21,8≤Θ≤45
cot Θ	2	hoek
alfa	80	
cot alfa	0.18	
Asw	113	mm2
s	200	mm
z (horende max. dwarskracht)	2887	mm
fywd	478	Mpa
VRD,S	7338	kN
Toetsing afschuiving door dwarskracht	0.15	

Toetsing betonspanning	0.87	Voldoet
Toetsing afschuiving in wand	0.15	Voldoet

Afschuiving in wapening door torsie

Maximaal torsie	1736695	kNmm
Maximaal afschuiving torsie / doorsnede	1455	kN
Maximaal dwarskracht bij torsie	516	kN
Max. afschuiving wand door dwarskracht	516	kN
Hoek loodrecht dwarskracht/drukdiagonaal	30	21,8≤Θ≤45
cot Θ	2	hoek
alfa	80	
cot alfa	0.18	
Asw	113	mm2
s	200	mm
z (dwarskracht)	2887	mm
z (torsie)	7501	mm
fywd	478	Mpa
VRD,max (dwarskracht)	7338	kN
VRD,max (torsie)	19062	kN
Toetsing afschuiving door dwarskracht	0.07	
Toetsing afschuiving door torsie	0.08	
Totaal	0.15	

W4HK450 Bijlage H

Segment	**2**	
Lengte	**12**	**m**
Gewicht	**92.4**	**ton**

Betonklasse	B	Voldoet
Voorspananker	FeP1860	
Nkabel; `toegepast Buiten	16	Voldoet
Nkabel; `toegepast Binnen	8	
Dwarswapening	12	rond
Materiaal	550	Fb550
Aantal ringbeugels/meter hoogte	5	Voldoet

Keuze Betonklasse	A	B	C	D
	C55/67	C70/85	C80/95	C90/105
fck	55	70	80	90
yck	1.5	1.5	1.5	1.5
fcd	-36.7	-46.7	-53.3	-60.0
Trekspanning	0	0	0	0

Optredende spanningen

Segment	2		
Ingevulde wanddikte	450		
	Voet	Top	
Buitendiameter	2878	2456	mm
Buitenomtrek	9042	7716	mm
Wanddikte	450	450	mm
Binnendiameter	1978	1556	mm
Doorsnede	Hol	Hol	
Omtrek/dikte	20.09	17.15	Verhouding
Oppervlak	3432588	2836083	mm2
Weerstandsmoment	1818223575	1220233443	mm3
Maximale moment	38569	kNm	
Maximale moment + 2de orde	42426	kNm	
Maximaal dwarskracht	1111	kN	
Maximaal torsiemoment	1736695	kNmm	
Maximaal normaalkracht	3071	kN	
Spanning tgv normaalkracht	0.9	N/mm2	
Spanning tgv moment	23.5	N/mm2	
2de orde effect verrekening	10%		
Factor e.g	1.2		
Maximale drukspanning	-24.4	Mpa	
Toelaatbare spanning	-46.7	Komende uit betonklasse	
Maximale trekspanning	22.8	MPa	
Toelaatbare trekspanning	0.0	MPa	

Voorspanning

Benodigde voorspanning ULS	22.8	Mpa
Benodigde voorspanning SLS	17	Mpa
Benodigde voorspankracht	77901	kN
Resulterende betonspanningen		
Trekzijde	0	Mpa
Drukzijde	-47	Mpa
Na relaxatie	-42	MPa
Keuze voorspankabels	FeP1860	
Toelaatbare spanning	1200	MPa
Astreng	150	mm2
streng/kabel	19	
Akabel	2850	mm2
Benodigde voorspankracht	77901	kN
Nkabel; benodigd	23	
Nkabel; `toegepast Buiten	16	
Nkabel; `toegepast Binnen	8	
Ankerverdeling top		
Gegeven E6-19		
Randafstand ankers	230	mm
Minimale hoh-afstand ankers	300	mm
Anker circel buiten	1996	mm
Anker cirkel binnen	1396	mm
Omtrek ankercirkel buiten	6271	mm
Omtrek ankercirkel binnen	4386	mm
Aantal plaatsbare ankers buitenring	20	
Aantal plaatsbare ankers binnenring	14	

Afschuiving in wapening door dwarskracht **(NEN-EN 1992-1-1 Hfst. 6.2.3)**

Max. dwarskracht in segment	1111	kN
Max. dwarskracht / doorsnede	1079	kN
Maximale optredende afschuiving in de wand	1079	kN
Hoek loodrecht dwarskracht/drukdiagonaal	30	21,8≤Θ≤45
cot Θ	2	hoek
alfa	80	
cot alfa	0.18	
Asw	113	mm2
s	200	mm
z (horende max. dwarskracht)	2462	mm
fywd	478	Mpa
VRD,S	6258	kN
Toetsing afschuiving door dwarskracht	0.17	

Toetsing betonspanning	0.90	Voldoet
Toetsing afschuiving in wand	0.19	Voldoet

Afschuiving in wapening door torsie

Maximaal torsie	1736695	kNmm
Maximaal afschuiving torsie / doorsnede	1726	kN
Maximaal dwarskracht bij torsie	500	kN
Max. afschuiving wand door dwarskracht	500	kN
Hoek loodrecht dwarskracht/drukdiagonaal	30	21,8≤Θ≤45
cot Θ	2	hoek
alfa	80	
cot alfa	0.18	
Asw	113	mm2
s	200	mm
z (dwarskracht)	2462	mm
z (torsie)	6322	mm
fywd	478	Mpa
VRD,max (dwarskracht)	6258	kN
VRD,max (torsie)	16068	kN
Toetsing afschuiving door dwarskracht	0.08	
Toetsing afschuiving door torsie	0.11	
Totaal	0.19	

W4HK450 Bijlage H

Segment	**3**	
Lengte	**12**	**m**
Gewicht	**68.0**	**ton**

Betonklasse	B	Voldoet
Voorspananker	FeP1860	
Nkabel; `toegepast Buiten	12	Voldoet
Nkabel; `toegepast Binnen	6	
Dwarswapening	12	rond
Materiaal	550	Fb550
Aantal ringbeugels/meter hoogte	5	Voldoet

Keuze Betonklasse	A	B	C	D
	C55/67	C70/85	C80/95	C90/105
fck	55	70	80	90
yck	1.5	1.5	1.5	1.5
fcd	-36.7	-46.7	-53.3	-60.0
Trekspanning	0	0	0	0

Optredende spanningen

Segment	3		
Ingevulde wanddikte	400		
	Voet	Top	
Buitendiameter	2456	2034	mm
Buitenomtrek	7716	6391	mm
Wanddikte	400	400	mm
Binnendiameter	1656	1234	mm
Doorsnede	Hol	Hol	
Omtrek/dikte	19.29	15.98	Verhouding
Oppervlak	2583794	2053568	mm2
Weerstandsmoment	1153925770	714379188	mm3
Maximale moment	25356	kNm	
Maximale moment + 2de orde	27892	kNm	
Maximaal dwarskracht	1077	kN	
Maximaal torsiemoment	1736695	kNmm	
Maximaal normaalkracht	1983	kN	
Spanning tgv normaalkracht	0.8	N/mm2	
Spanning tgv moment	24.3	N/mm2	
2de orde effect verrekening	10%		
Factor e.g	1.2		
Maximale drukspanning	-25.1	Mpa	
Toelaatbare spanning	-46.7	Komende uit betonklasse	
Maximale trekspanning	23.7	MPa	
Toelaatbare trekspanning	0.0	MPa	

Voorspanning

Benodigde voorspanning ULS	23.7	Mpa
Benodigde voorspanning SLS	17	Mpa
Benodigde voorspankracht	61168	kN
Resulterende betonspanningen		
Trekzijde	0	Mpa
Drukzijde	-49	Mpa
Na relaxatie	-44	MPa
Keuze voorspankabels	FeP1860	
Toelaatbare spanning	1200	MPa
Astreng	150	mm2
streng/kabel	19	
Akabel	2850	mm2
Benodigde voorspankracht	61168	kN
Nkabel; benodigd	18	
Nkabel; `toegepast Buiten	12	
Nkabel; `toegepast Binnen	6	
Ankerverdeling top		
Gegeven E6-19		
Randafstand ankers	230	mm
Minimale hoh-afstand ankers	300	mm
Anker circel buiten	1574	mm
Anker cirkel binnen	974	mm
Omtrek ankercirkel buiten	4945	mm
Omtrek ankercirkel binnen	3060	mm
Aantal plaatsbare ankers buitenring	16	
Aantal plaatsbare ankers binnenring	10	

Afschuiving in wapening door dwarskracht **(NEN-EN 1992-1-1 Hfst. 6.2.3)**

Max. dwarskracht in segment	1077	kN
Max. dwarskracht / doorsnede	977	kN
Maximale optredende afschuiving in de wand	977	kN
Hoek loodrecht dwarskracht/drukdiagonaal	30	21,8≤Θ≤45
cot Θ	2	hoek
alfa	80	
cot alfa	0.18	
Asw	113	mm2
s	200	mm
z (horende max. dwarskracht)	2038	mm
fywd	478	Mpa
VRD,S	5178	kN
Toetsing afschuiving door dwarskracht	0.19	

Toetsing betonspanning	0.93	Voldoet
Toetsing afschuiving in wand	0.26	Voldoet

Afschuiving in wapening door torsie

Maximaal torsie	1736695	kNmm
Maximaal afschuiving torsie / doorsnede	2121	kN
Maximaal dwarskracht bij torsie	484	kN
Max. afschuiving wand door dwarskracht	484	kN
Hoek loodrecht dwarskracht/drukdiagonaal	30	21,8≤Θ≤45
cot Θ	2	hoek
alfa	80	
cot alfa	0.18	
Asw	113	mm2
s	200	mm
z (dwarskracht)	2038	mm
z (torsie)	5144	mm
fywd	478	Mpa
VRD,max (dwarskracht)	5178	kN
VRD,max (torsie)	13074	kN
Toetsing afschuiving door dwarskracht	0.09	
Toetsing afschuiving door torsie	0.16	
Totaal	0.26	

W4HK450 Bijlage H

Segment	**4**	
Lengte	**12**	**m**
Gewicht	**42.1**	**ton**

Betonklasse	B	Voldoet
Voorspananker	FeP1860	
Nkabel; `toegepast Buiten	10	Voldoet
Nkabel; `toegepast Binnen	4	
Dwarswapening	12	rond
Materiaal	550	Fb550
Aantal ringbeugels/meter hoogte	5	Voldoet

Keuze Betonklasse	A	B	C	D
	C55/67	C70/85	C80/95	C90/105
fck	55	70	80	90
yck	1.5	1.5	1.5	1.5
fcd	-36.7	-46.7	-53.3	-60.0
Trekspanning	0	0	0	0
	0			
	0			

Optredende spanningen

Segment	4		
Ingevulde wanddikte	300		
	Voet	Top	
Buitendiameter	2034	1612	mm
Buitenomtrek	6391	5065	mm
Wanddikte	300	300	mm
Binnendiameter	1434	1012	mm
Doorsnede	Hol	Hol	
Omtrek/dikte	21.30	16.88	Verhouding
Oppervlak	1634424	1236754	mm2
Weerstandsmoment	622169905	347491407	mm3
Maximale moment	13280	kNm	
Maximale moment + 2de orde	14608	kNm	
Maximaal dwarskracht	975	kN	
Maximaal torsiemoment	1736695	kNmm	
Maximaal normaalkracht	1178	kN	
Spanning tgv normaalkracht	0.7	N/mm2	
Spanning tgv moment	23.7	N/mm2	
2de orde effect verrekening	10%		
Factor e.g	1.2		
Maximale drukspanning	-24.5	Mpa	
Toelaatbare spanning	-46.7	Komende uit betonklasse	
Maximale trekspanning	23.2	MPa	
Toelaatbare trekspanning	0.0	MPa	

Voorspanning

Benodigde voorspanning ULS	23.2	Mpa
Benodigde voorspanning SLS	17	Mpa
Benodigde voorspankracht	37714	kN
Resulterende betonspanningen		
Trekzijde	0	Mpa
Drukzijde	-48	Mpa
Na relaxatie	-41	MPa
Keuze voorspankabels	FeP1860	
Toelaatbare spanning	1200	MPa
Astreng	150	mm2
streng/kabel	19	
Akabel	2850	mm2
Benodigde voorspankracht	37714	kN
Nkabel; benodigd	12	
Nkabel; `toegepast Buiten	10	
Nkabel; `toegepast Binnen	4	
Ankerverdeling top		
Gegeven E6-19		
Randafstand ankers	230	mm
Minimale hoh-afstand ankers	300	mm
Anker circel buiten	1152	mm
Anker cirkel binnen	552	mm
Omtrek ankercirkel buiten	3620	mm
Omtrek ankercirkel binnen	1735	mm
Aantal plaatsbare ankers buitenring	12	
Aantal plaatsbare ankers binnenring	5	

Afschuiving in wapening door dwarskracht **(NEN-EN 1992-1-1 Hfst. 6.2.3)**

Max. dwarskracht in segment	975	kN
Max. dwarskracht / doorsnede	973	kN
Maximale optredende afschuiving in de wand	973	kN
Hoek loodrecht dwarskracht/drukdiagonaal	30	21,8≤Θ≤45
cot Θ	2	hoek
alfa	80	
cot alfa	0.18	
Asw	113	mm2
s	200	mm
z (horende max. dwarskracht)	1988	mm
fywd	478	Mpa
VRD,S	5051	kN
Toetsing afschuiving door dwarskracht	0.19	

Toetsing betonspanning	0.89	Voldoet
Toetsing afschuiving in wand	0.26	Voldoet

Afschuiving in wapening door torsie

Maximaal torsie	1736695	kNmm
Maximaal afschuiving torsie / doorsned	1857	kN
Maximaal dwarskracht bij torsie	439	kN
Max. afschuiving wand door dwarskrac	439	kN
Hoek loodrecht dwarskracht/drukdiago	30	21,8≤Θ≤45
cot Θ	2	hoek
alfa	80	
cot alfa	0.18	
Asw	113	mm2
s	200	mm
z (dwarskracht)	1988	mm
z (torsie)	4123	mm
fywd	478	Mpa
VRD,max (dwarskracht)	5051	kN
VRD,max (torsie)	10479	kN
Toetsing afschuiving door dwarskracht	0.09	
Toetsing afschuiving door torsie	0.18	
Totaal	0.26	

W4HK450 Bijlage H

Segment	**5**	
Lengte	**12**	**m**
Gewicht	**26.4**	**ton**

Betonklasse	A	Voldoet
Voorspananker	FeP1860	
Nkabel; `toegepast Buiten	6	Voldoet
Nkabel; `toegepast Binnen	1	
Dwarswapening	12	rond
Materiaal	550	Fb550
Aantal ringbeugels/meter hoogte	5	Voldoet

Keuze Betonklasse	A	B	C	D
	C55/67	C70/85	C80/95	C90/105
fck	55	70	80	90
yck	1.5	1.5	1.5	1.5
fcd	-36.7	-46.7	-53.3	-60.0
Trekspanning	0	0	0	0

Optredende spanningen

Segment	5		
Ingevulde wanddikte	250		
	Voet	Top	
Buitendiameter	1612	1190	mm
Buitenomtrek	5065	3739	mm
Wanddikte	250	250	mm
Binnendiameter	1112	690	mm
Doorsnede	Hol	Hol	
Omtrek/dikte	20.26	14.96	Verhouding
Oppervlak	1069898	738506	mm2
Weerstandsmoment	318232657	146835593	mm3
Maximale moment	4740	kNm	
Maximale moment + 2de orde	5214	kNm	
Maximaal dwarskracht	677	kN	
Maximaal torsiemoment	1218516	kNmm	
Maximaal normaalkracht	625	kN	
Spanning tgv normaalkracht	0.6	N/mm2	
Spanning tgv moment	16.7	N/mm2	
2de orde effect verrekening	10%		
Factor e.g	1.2		
Maximale drukspanning	-17.3	Mpa	
Toelaatbare spanning	-36.7	Komende uit betonklasse	
Maximale trekspanning	16.1	MPa	
Toelaatbare trekspanning	0.0	MPa	

Voorspanning

Benodigde voorspanning ULS	16.1	Mpa
Benodigde voorspanning SLS	12	Mpa
Benodigde voorspankracht	17236	kN
Resulterende betonspanningen		
Trekzijde	0	Mpa
Drukzijde	-33	Mpa
Na relaxatie	-30	MPa
Keuze voorspankabels	FeP1860	
Toelaatbare spanning	1200	MPa
Astreng	150	mm2
streng/kabel	19	
Akabel	2850	mm2
Benodigde voorspankracht	17236	kN
Nkabel; benodigd	6	
Nkabel; `toegepast Buiten	6	
Nkabel; `toegepast Binnen	1	
Ankerverdeling top		
Gegeven E6-19		
Randafstand ankers	230	mm
Minimale hoh-afstand ankers	300	mm
Anker circel buiten	730	mm
Anker cirkel binnen	130	mm
Omtrek ankercirkel buiten	2294	mm
Omtrek ankercirkel binnen	409	mm
Aantal plaatsbare ankers buitenring	7	
Aantal plaatsbare ankers binnenring	1	

Afschuiving in wapening door dwarskracht **(NEN-EN 1992-1-1 Hfst. 6.2.3)**

Max. dwarskracht in segment		677	kN
Max. dwarskracht / doorsnede		677	kN
Maximale optredende afschuiving in de wand		677	kN
Hoek loodrecht dwarskracht/drukdiagonaal		30	21,8≤Θ≤45
cot Θ		2	hoek
alfa		80	
cot alfa		0.18	
Asw		113	mm2
s		200	mm
z (horende max. dwarskracht)		1588	mm
fywd		478	Mpa
VRD,S		4034	kN
Toetsing afschuiving door dwarskracht		0.17	0
	0	0	0

Toetsing betonspanning	0.81	Voldoet
Toetsing afschuiving in wand	0.27	Voldoet

Afschuiving in wapening door torsie

Maximaal torsie	1218516	kNmm
Maximaal afschuiving torsie / doorsned	1469	kN
Maximaal dwarskracht bij torsie	304	kN
Max. afschuiving wand door dwarskra	304	kN
Hoek loodrecht dwarskracht/drukdiago	30	21,8≤Θ≤45
cot Θ	2	hoek
alfa	80	
cot alfa	0.18	
Asw	113	mm2
s	200	mm
z (dwarskracht)	1588	mm
z (torsie)	2945	mm
fywd	478	Mpa
VRD,max (dwarskracht)	4034	kN
VRD,max (torsie)	7485	kN
Toetsing afschuiving door dwarskracht	0.08	
Toetsing afschuiving door torsie	0.20	
Totaal	0.27	

W4HK450 Bijlage H

Segment	**6**	
Lengte	**11.1**	**m**
Gewicht	**16.5**	**ton**

Betonklasse	A	Voldoet
Voorspananker	FeP1860	
Nkabel; `toegepast Buiten	2	Voldoet
Nkabel; `toegepast Binnen	0	
Dwarswapening	12	rond
Materiaal	550	Fb550
Aantal ringbeugels/meter hoogte	5	Voldoet

Keuze Betonklasse	A	B	C	D
	C55/67	C70/85	C80/95	C90/105
fck	55	70	80	90
yck	1.5	1.5	1.5	1.5
fcd	-36.7	-46.7	-53.3	-60.0
Trekspanning	0	0	0	0

Optredende spanningen

Segment	6		
Ingevulde wanddikte	200		
	Voet	Top	
Buitendiameter	1190	800	mm
Buitenomtrek	3739	2513	mm
Wanddikte	200	200	mm
Binnendiameter	790	400	mm
Doorsnede	Hol	Hol	
Omtrek/dikte	18.70	12.57	Verhouding
Oppervlak	622221	376991	mm2
Weerstandsmoment	133389477	47123890	mm3
Maximale moment	506	kNm	
Maximale moment + 2de orde	557	kNm	
Maximaal dwarskracht	53	kN	
Maximaal torsiemoment	148136	kNmm	
Maximaal normaalkracht	199	kN	
Spanning tgv normaalkracht	0.3	N/mm2	
Spanning tgv moment	3.9	N/mm2	
2de orde effect verrekening	10%		
Factor e.g	1.2		
Maximale drukspanning	-4.2	Mpa	
Toelaatbare spanning	-36.7	Komende uit betonklasse	
Maximale trekspanning	3.7	MPa	
Toelaatbare trekspanning	0.0	MPa	

Voorspanning

Benodigde voorspanning ULS	3.7	Mpa
Benodigde voorspanning SLS	3	Mpa
Benodigde voorspankracht	2249	kN
Resulterende betonspanningen		
Trekzijde	0	Mpa
Drukzijde	-8	Mpa
Na relaxatie	-7	MPa
Keuze voorspankabels	FeP1860	
Toelaatbare spanning	1200	MPa
Astreng	150	mm2
streng/kabel	19	
Akabel	2850	mm2
Benodigde voorspankracht	2249	kN
Nkabel; benodigd	1	
Nkabel; `toegepast Buiten	2	
Nkabel; `toegepast Binnen	0	
Ankerverdeling top		
Gegeven E6-19		
Randafstand ankers	230	mm
Minimale hoh-afstand ankers	300	mm
Anker circel buiten	340	mm
Anker cirkel binnen	-260	mm
Omtrek ankercirkel buiten	1068	mm
Omtrek ankercirkel binnen	-817	mm
Aantal plaatsbare ankers buitenring	3	
Aantal plaatsbare ankers binnenring	-2	

Afschuiving in wapening door dwarskracht **(NEN-EN 1992-1-1 Hfst. 6.2.3)**

Max. dwarskracht in segment	53	kN
Max. dwarskracht / doorsnede	37	kN
Maximale optredende afschuiving in de wand	37	kN
Hoek loodrecht dwarskracht/drukdiagonaal	30	21,8≤Θ≤45
cot Θ	2	hoek
alfa	80	
cot alfa	0.18	
Asw	113	mm2
s	200	mm
z (horende max. dwarskracht)	813	mm
fywd	478	Mpa
VRD,S	2065	kN
Toetsing afschuiving door dwarskracht	0.02	

Toetsing betonspanning	0.20	Voldoet
Toetsing afschuiving in wand	0.11	Voldoet

Afschuiving in wapening door torsie

Maximaal torsie	148136	kNmm
Maximaal afschuiving torsie / doorsnec	494	kN
Maximaal dwarskracht bij torsie	24	kN
Max. afschuiving wand door dwarskra	24	kN
Hoek loodrecht dwarskracht/drukdiago	30	21,8≤Θ≤45
cot Θ	2	hoek
alfa	80	
cot alfa	0.18	
Asw	113	mm2
s	200	mm
z (dwarskracht)	813	mm
z (torsie)	1885	mm
fywd	478	Mpa
VRD,max (dwarskracht)	2065	kN
VRD,max (torsie)	4790	kN
Toetsing afschuiving door dwarskracht	0.01	
Toetsing afschuiving door torsie	0.10	
Totaal	0.11	

W4HL350 Bijlage D

Segment	**1**	
Lengte	**12**	**m**
Gewicht	**105.9**	**ton**

Betonklasse	B	Voldoet
Voorspananker	FeP1860	
Nkabel; `toegepast Buiten	20	Voldoet
Nkabel; `toegepast Binnen	8	
Dwarswapening	12	rond
Materiaal	550	Fb550
Aantal ringbeugels/meter hoogte	5	Voldoet

Keuze Betonklasse	A	B	C	D
	C55/67	C70/85	C80/95	C90/105
fck	55	70	80	90
yck	1.5	1.5	1.5	1.5
fcd	-36.7	-46.7	-53.3	-60.0
Trekspanning	0	0	0	0

Optredende spanningen

Segment	1		
Ingevulde wanddikte	500		
	Voet	Top	
Buitendiameter	3000	2524	mm
Buitenomtrek	9425	7930	mm
Wanddikte	500	500	mm
Binnendiameter	2000	1524	mm
Doorsnede	Hol	Hol	
Omtrek/dikte	18.85	15.86	Verhouding
Oppervlak	3926991	3179801	mm2
Weerstandsmoment	2127120026	1369220120	mm3
Maximale moment	45865	kNm	
Maximale moment + 2de orde	50452	kNm	
Maximaal dwarskracht	1266	kN	
Maximaal torsiemoment	1740354	kNmm	
Maximaal normaalkracht	3468	kN	
Spanning tgv normaalkracht	0.9	N/mm2	
Spanning tgv moment	24.7	N/mm2	
2de orde effect verrekening	10%		
Factor e.g	1.2		
Maximale drukspanning	-25.6	Mpa	
Toelaatbare spanning	-46.7	Komende uit betonklasse	
Maximale trekspanning	24.0	MPa	
Toelaatbare trekspanning	0.0	MPa	

Voorspanning

Benodigde voorspanning ULS	24.0	Mpa
Benodigde voorspanning SLS	20	Mpa
Benodigde voorspankracht	90541	kN
Resulterende betonspanningen		
Trekzijde	0	Mpa
Drukzijde	-50	Mpa
Na relaxatie	-45	MPa
Keuze voorspankabels	FeP1860	
Toelaatbare spanning	1200	MPa
Astreng	150	mm2
streng/kabel	19	
Akabel	2850	mm2
Benodigde voorspankracht	90541	kN
Nkabel; benodigd	27	
Nkabel; `toegepast Buiten	20	
Nkabel; `toegepast Binnen	8	
Ankerverdeling top		
Gegeven E6-19		
Randafstand ankers	230	mm
Minimale hoh-afstand ankers	300	mm
Anker circel buiten	2064	mm
Anker cirkel binnen	1464	mm
Omtrek ankercirkel buiten	6485	mm
Omtrek ankercirkel binnen	4600	mm
Aantal plaatsbare ankers buitenring	21	
Aantal plaatsbare ankers binnenring	15	

Afschuiving in wapening door dwarskracht **(NEN-EN 1992-1-1 Hfst. 6.2.3)**

Max. dwarskracht in segment	1266	kN
Max. dwarskracht / doorsnede	1257	kN
Maximale optredende afschuiving in de wand	1257	kN
Hoek loodrecht dwarskracht/drukdiagonaal	30	21,8≤Θ≤45
cot Θ	2	hoek
alfa	80	
cot alfa	0.18	
Asw	113	mm2
s	200	mm
z (horende max. dwarskracht)	2527	mm
fywd	478	Mpa
VRD,S	6422	kN
Toetsing afschuiving door dwarskracht	0.20	

Toetsing betonspanning	0.96	Voldoet
Toetsing afschuiving in wand	0.20	Voldoet

Afschuiving in wapening door torsie

Maximaal torsie	1740354	kNmm
Maximaal afschuiving torsie / doorsnede	1717	kN
Maximaal dwarskracht bij torsie	570	kN
Max. afschuiving wand door dwarskracht	570	kN
Hoek loodrecht dwarskracht/drukdiagonaal	30	21,8≤Θ≤45
cot Θ	2	hoek
alfa	80	
cot alfa	0.18	
Asw	113	mm2
s	200	mm
z (dwarskracht)	2527	mm
z (torsie)	6368	mm
fywd	478	Mpa
VRD,max (dwarskracht)	6422	kN
VRD,max (torsie)	16184	kN
Toetsing afschuiving door dwarskracht	0.09	
Toetsing afschuiving door torsie	0.11	
Totaal	0.19	

W4HL350 Bijlage D

Segment	**2**	
Lengte	**12**	**m**
Gewicht	**77.0**	**ton**

Betonklasse	B	Voldoet
Voorspananker	FeP1860	
Nkabel; `toegepast Buiten	16	Voldoet
Nkabel; `toegepast Binnen	8	
Dwarswapening	12	rond
Materiaal	550	Fb550
Aantal ringbeugels/meter hoogte	5	Voldoet

Keuze Betonklasse	A	B	C	D
	C55/67	C70/85	C80/95	C90/105
fck	55	70	80	90
yck	1.5	1.5	1.5	1.5
fcd	-36.7	-46.7	-53.3	-60.0
Trekspanning	0	0	0	0

Optredende spanningen

Segment	2		
Ingevulde wanddikte	450		
	Voet	Top	
Buitendiameter	2524	2049	mm
Buitenomtrek	7930	6436	mm
Wanddikte	450	450	mm
Binnendiameter	1624	1149	mm
Doorsnede	Hol	Hol	
Omtrek/dikte	17.62	14.30	Verhouding
Oppervlak	2932507	2260036	mm2
Weerstandsmoment	1308457682	760694279	mm3
Maximale moment	30470	kNm	
Maximale moment + 2de orde	33517	kNm	
Maximaal dwarskracht	1257	kN	
Maximaal torsiemoment	1740354	kNmm	
Maximaal normaalkracht	2221	kN	
Spanning tgv normaalkracht	0.8	N/mm2	
Spanning tgv moment	25.8	N/mm2	
2de orde effect verrekening	10%		
Factor e.g	1.2		
Maximale drukspanning	-26.6	Mpa	
Toelaatbare spanning	-46.7	Komende uit betonklasse	
Maximale trekspanning	25.3	MPa	
Toelaatbare trekspanning	0.0	MPa	

Voorspanning

Benodigde voorspanning ULS	25.3	Mpa
Benodigde voorspanning SLS	21	Mpa
Benodigde voorspankracht	73782	kN
Resulterende betonspanningen		
Trekzijde	0	Mpa
Drukzijde	-52	Mpa
Na relaxatie	-45	MPa
Keuze voorspankabels	FeP1860	
Toelaatbare spanning	1200	MPa
Astreng	150	mm2
streng/kabel	19	
Akabel	2850	mm2
Benodigde voorspankracht	73782	kN
Nkabel; benodigd	22	
Nkabel; `toegepast Buiten	16	
Nkabel; `toegepast Binnen	8	
Ankerverdeling top		
Gegeven E6-19		
Randafstand ankers	230	mm
Minimale hoh-afstand ankers	300	mm
Anker circel buiten	1589	mm
Anker cirkel binnen	989	mm
Omtrek ankercirkel buiten	4991	mm
Omtrek ankercirkel binnen	3106	mm
Aantal plaatsbare ankers buitenring	16	
Aantal plaatsbare ankers binnenring	10	

Afschuiving in wapening door dwarskracht **(NEN-EN 1992-1-1 Hfst. 6.2.3)**

Max. dwarskracht in segment	1257	kN
Max. dwarskracht / doorsnede	1251	kN
Maximale optredende afschuiving in de wand	1251	kN
Hoek loodrecht dwarskracht/drukdiagonaal	30	21,8≤Θ≤45
cot Θ	2	hoek
alfa	80	
cot alfa	0.18	
Asw	113	mm2
s	200	mm
z (horende max. dwarskracht)	2219	mm
fywd	478	Mpa
VRD,S	5639	kN
Toetsing afschuiving door dwarskracht	0.22	

Toetsing betonspanning	0.97	Voldoet
Toetsing afschuiving in wand	0.27	Voldoet

Afschuiving in wapening door torsie

Maximaal torsie	1740354	kNmm
Maximaal afschuiving torsie / doorsnede	2185	kN
Maximaal dwarskracht bij torsie	565	kN
Max. afschuiving wand door dwarskracht	565	kN
Hoek loodrecht dwarskracht/drukdiagonaal	30	21,8≤Θ≤45
cot Θ	2	hoek
alfa	80	
cot alfa	0.18	
Asw	113	mm2
s	200	mm
z (dwarskracht)	2219	mm
z (torsie)	5005	mm
fywd	478	Mpa
VRD,max (dwarskracht)	5639	kN
VRD,max (torsie)	12719	kN
Toetsing afschuiving door dwarskracht	0.10	
Toetsing afschuiving door torsie	0.17	
Totaal	0.27	

W4HL350 Bijlage D

Segment	**3**	
Lengte	**12**	**m**
Gewicht	**50.1**	**ton**

Betonklasse	B	Voldoet
Voorspananker	FeP1860	
Nkabel; `toegepast Buiten	10	Voldoet
Nkabel; `toegepast Binnen	5	
Dwarswapening	12	rond
Materiaal	550	Fb550
Aantal ringbeugels/meter hoogte	5	Voldoet

Keuze Betonklasse	A	B	C	D
	C55/67	C70/85	C80/95	C90/105
fck	55	70	80	90
yck	1.5	1.5	1.5	1.5
fcd	-36.7	-46.7	-53.3	-60.0
Trekspanning	0	0	0	0

Optredende spanningen

Segment	3		
Ingevulde wanddikte	400		
	Voet	Top	
Buitendiameter	2049	1573	mm
Buitenomtrek	6436	4942	mm
Wanddikte	400	400	mm
Binnendiameter	1249	773	mm
Doorsnede	Hol	Hol	
Omtrek/dikte	16.09	12.35	Verhouding
Oppervlak	2071753	1474001	mm2
Weerstandsmoment	727625122	359807183	mm3
Maximale moment	15794	kNm	
Maximale moment + 2de orde	17373	kNm	
Maximaal dwarskracht	1126	kN	
Maximaal torsiemoment	1740354	kNmm	
Maximaal normaalkracht	1298	kN	
Spanning tgv normaalkracht	0.6	N/mm2	
Spanning tgv moment	24.4	N/mm2	
2de orde effect verrekening	10%		
Factor e.g	1.2		
Maximale drukspanning	-25.0	Mpa	
Toelaatbare spanning	-46.7	Komende uit betonklasse	
Maximale trekspanning	23.9	MPa	
Toelaatbare trekspanning	0.0	MPa	

Voorspanning

Benodigde voorspanning ULS	23.9	Mpa
Benodigde voorspanning SLS	20	Mpa
Benodigde voorspankracht	49040	kN
Resulterende betonspanningen		
Trekzijde	0	Mpa
Drukzijde	-49	Mpa
Na relaxatie	-43	MPa
Keuze voorspankabels	FeP1860	
Toelaatbare spanning	1200	MPa
Astreng	150	mm2
streng/kabel	19	
Akabel	2850	mm2
Benodigde voorspankracht	49040	kN
Nkabel; benodigd	15	
Nkabel; `toegepast Buiten	10	
Nkabel; `toegepast Binnen	5	
Ankerverdeling top		
Gegeven E6-19		
Randafstand ankers	230	mm
Minimale hoh-afstand ankers	300	mm
Anker circel buiten	1113	mm
Anker cirkel binnen	513	mm
Omtrek ankercirkel buiten	3497	mm
Omtrek ankercirkel binnen	1612	mm
Aantal plaatsbare ankers buitenring	11	
Aantal plaatsbare ankers binnenring	5	

Afschuiving in wapening door dwarskracht **(NEN-EN 1992-1-1 Hfst. 6.2.3)**

Max. dwarskracht in segment	1126	kN
Max. dwarskracht / doorsnede	1123	kN
Maximale optredende afschuiving in de wand	1123	kN
Hoek loodrecht dwarskracht/drukdiagonaal	30	21,8≤Θ≤45
cot Θ	2	hoek
alfa	80	
cot alfa	0.18	
Asw	113	mm2
s	200	mm
z (horende max. dwarskracht)	1867	mm
fywd	478	Mpa
VRD,S	4745	kN
Toetsing afschuiving door dwarskracht	0.24	

Toetsing betonspanning	0.93	Voldoet
Toetsing afschuiving in wand	0.32	Voldoet

Afschuiving in wapening door torsie

Maximaal torsie	1740354	kNmm
Maximaal afschuiving torsie / doorsnede	2050	kN
Maximaal dwarskracht bij torsie	507	kN
Max. afschuiving wand door dwarskracht	507	kN
Hoek loodrecht dwarskracht/drukdiagonaal	30	21,8≤Θ≤45
cot Θ	2	hoek
alfa	80	
cot alfa	0.18	
Asw	113	mm2
s	200	mm
z (dwarskracht)	1867	mm
z (torsie)	3710	mm
fywd	478	Mpa
VRD,max (dwarskracht)	4745	kN
VRD,max (torsie)	9429	kN
Toetsing afschuiving door dwarskracht	0.11	
Toetsing afschuiving door torsie	0.22	
Totaal	0.32	

W4HL350 Bijlage D

Segment	**4**	
Lengte	**12**	**m**
Gewicht	**28.8**	**ton**

Betonklasse	B	Voldoet
Voorspananker	FeP1860	
Nkabel; `toegepast Buiten	6	Voldoet
Nkabel; `toegepast Binnen	1	
Dwarswapening	12	rond
Materiaal	550	Fb550
Aantal ringbeugels/meter hoogte	5	Voldoet

Keuze Betonklasse	A	B	C	D
	C55/67	C70/85	C80/95	C90/105
fck	55	70	80	90
yck	1.5	1.5	1.5	1.5
fcd	-36.7	-46.7	-53.3	-60.0
Trekspanning	0	0	0	0
	0			
Optredende spanningen	0			

Segment	4		
Ingevulde wanddikte	300		
	Voet	Top	
Buitendiameter	1573	1097	mm
Buitenomtrek	4942	3447	mm
Wanddikte	300	300	mm
Binnendiameter	973	497	mm
Doorsnede	Hol	Hol	
Omtrek/dikte	16.47	11.49	Verhouding
Oppervlak	1199749	751435	mm2
Weerstandsmoment	326153489	124237887	mm3
Maximale moment	5380	kNm	
Maximale moment + 2de orde	5918	kNm	
Maximaal dwarskracht	776	kN	
Maximaal torsiemoment	1210262	kNmm	
Maximaal normaalkracht	631	kN	
Spanning tgv normaalkracht	0.5	N/mm2	
Spanning tgv moment	18.2	N/mm2	
2de orde effect verrekening	10%		
Factor e.g	1.2		
Maximale drukspanning	-18.8	Mpa	
Toelaatbare spanning	-46.7	Komende uit betonklasse	
Maximale trekspanning	17.8	MPa	
Toelaatbare trekspanning	0.0	MPa	

Voorspanning

Benodigde voorspanning ULS	17.8	Mpa
Benodigde voorspanning SLS	15	Mpa
Benodigde voorspankracht	21350	kN
Resulterende betonspanningen		
Trekzijde	0	Mpa
Drukzijde	-37	Mpa
Na relaxatie	-33	MPa
Keuze voorspankabels	FeP1860	
Toelaatbare spanning	1200	MPa
Astreng	150	mm2
streng/kabel	19	
Akabel	2850	mm2
Benodigde voorspankracht	21350	kN
Nkabel; benodigd	7	
Nkabel; `toegepast Buiten	6	
Nkabel; `toegepast Binnen	1	
Ankerverdeling top		
Gegeven E6-19		
Randafstand ankers	230	mm
Minimale hoh-afstand ankers	300	mm
Anker circel buiten	637	mm
Anker cirkel binnen	37	mm
Omtrek ankercirkel buiten	2002	mm
Omtrek ankercirkel binnen	117	mm
Aantal plaatsbare ankers buitenring	6	
Aantal plaatsbare ankers binnenring	0	

Afschuiving in wapening door dwarskracht **(NEN-EN 1992-1-1 Hfst. 6.2.3)**

Max. dwarskracht in segment	776	kN
Max. dwarskracht / doorsnede	775	kN
Maximale optredende afschuiving in de wand	775	kN
Hoek loodrecht dwarskracht/drukdiagonaal	30	21,8≤Θ≤45
cot Θ	2	hoek
alfa	80	
cot alfa	0.18	
Asw	113	mm2
s	200	mm
z (horende max. dwarskracht)	1515	mm
fywd	478	Mpa
VRD,S	3850	kN
Toetsing afschuiving door dwarskracht	0.20	

Toetsing betonspanning	0.71	Voldoet
Toetsing afschuiving in wand	0.33	Voldoet

Afschuiving in wapening door torsie

Maximaal torsie	1210262	kNmm
Maximaal afschuiving torsie / doorsned	1596	kN
Maximaal dwarskracht bij torsie	349	kN
Max. afschuiving wand door dwarskrac	349	kN
Hoek loodrecht dwarskracht/drukdiago	30	21,8≤Θ≤45
cot Θ	2	hoek
alfa	80	
cot alfa	0.18	
Asw	113	mm2
s	200	mm
z (dwarskracht)	1515	mm
z (torsie)	2642	mm
fywd	478	Mpa
VRD,max (dwarskracht)	3850	kN
VRD,max (torsie)	6715	kN
Toetsing afschuiving door dwarskracht	0.09	
Toetsing afschuiving door torsie	0.24	
Totaal	0.33	

W4HL350 Bijlage D

Segment	**5**	
Lengte	**7.5**	**m**
Gewicht	**10.3**	**ton**

Betonklasse	A	Voldoet
Voorspananker	FeP1860	
Nkabel; `toegepast Buiten	2	Voldoet
Nkabel; `toegepast Binnen	0	
Dwarswapening	12	rond
Materiaal	550	Fb550
Aantal ringbeugels/meter hoogte	5	Voldoet

Keuze Betonklasse	A	B	C	D
	C55/67	C70/85	C80/95	C90/105
fck	55	70	80	90
yck	1.5	1.5	1.5	1.5
fcd	-36.7	-46.7	-53.3	-60.0
Trekspanning	0	0	0	0

Optredende spanningen

Segment	5		
Ingevulde wanddikte	150		
	Voet	Top	
Buitendiameter	1097	800	mm
Buitenomtrek	3447	2513	mm
Wanddikte	150	150	mm
Binnendiameter	797	500	mm
Doorsnede	Hol	Hol	
Omtrek/dikte	22.98	16.76	Verhouding
Oppervlak	446403	306305	mm2
Weerstandsmoment	93555777	42595579	mm3
Maximale moment	420	kNm	
Maximale moment + 2de orde	462	kNm	
Maximaal dwarskracht	65	kN	
Maximaal torsiemoment	124919	kNmm	
Maximaal normaalkracht	138	kN	
Spanning tgv normaalkracht	0.3	N/mm2	
Spanning tgv moment	5.1	N/mm2	
2de orde effect verrekening	10%		
Factor e.g	1.2		
Maximale drukspanning	-5.4	Mpa	
Toelaatbare spanning	-36.7	Komende uit betonklasse	
Maximale trekspanning	4.7	MPa	
Toelaatbare trekspanning	0.0	MPa	

Voorspanning

Benodigde voorspanning ULS	4.7	Mpa
Benodigde voorspanning SLS	4	Mpa
Benodigde voorspankracht	2368	kN
Resulterende betonspanningen		
Trekzijde	0	Mpa
Drukzijde	-10	Mpa
Na relaxatie	-9	MPa
Keuze voorspankabels	FeP1860	
Toelaatbare spanning	1200	MPa
Astreng	150	mm2
streng/kabel	19	
Akabel	2850	mm2
Benodigde voorspankracht	2368	kN
Nkabel; benodigd	1	
Nkabel; `toegepast Buiten	2	
Nkabel; `toegepast Binnen	0	
Ankerverdeling top		
Gegeven E6-19		
Randafstand ankers	230	mm
Minimale hoh-afstand ankers	300	mm
Anker circel buiten	340	mm
Anker cirkel binnen	-260	mm
Omtrek ankercirkel buiten	1068	mm
Omtrek ankercirkel binnen	-817	mm
Aantal plaatsbare ankers buitenring	3	
Aantal plaatsbare ankers binnenring	-2	

Afschuiving in wapening door dwarskracht **(NEN-EN 1992-1-1 Hfst. 6.2.3)**

Max. dwarskracht in segment		65	kN
Max. dwarskracht / doorsnede		62	kN
Maximale optredende afschuiving in de wand		62	kN
Hoek loodrecht dwarskracht/drukdiagonaal		30	21,8≤Θ≤45
cot Θ		2	hoek
alfa		80	
cot alfa		0.18	
Asw		113	mm2
s		200	mm
z (horende max. dwarskracht)		811	mm
fywd		478	Mpa
VRD,S		2061	kN
Toetsing afschuiving door dwarskracht		0.03	0
	0	0	0

Toetsing betonspanning	0.25	Voldoet
Toetsing afschuiving in wand	0.09	Voldoet

Afschuiving in wapening door torsie

Maximaal torsie	124919	kNmm
Maximaal afschuiving torsie / doorsned	378	kN
Maximaal dwarskracht bij torsie	29	kN
Max. afschuiving wand door dwarskra	29	kN
Hoek loodrecht dwarskracht/drukdiago	30	21,8≤Θ≤45
cot Θ	2	hoek
alfa	80	
cot alfa	0.18	
Asw	113	mm2
s	200	mm
z (dwarskracht)	811	mm
z (torsie)	2077	mm
fywd	478	Mpa
VRD,max (dwarskracht)	2061	kN
VRD,max (torsie)	5277	kN
Toetsing afschuiving door dwarskracht	0.01	
Toetsing afschuiving door torsie	0.07	
Totaal	0.09	

W4HL400 Bijlage F

Segment	**1**	
Lengte	**12**	**m**
Gewicht	**114.0**	**ton**

Betonklasse	B	Voldoet
Voorspananker	FeP1860	
Nkabel; `toegepast Buiten	20	Voldoet
Nkabel; `toegepast Binnen	12	
Dwarswapening	12	rond
Materiaal	550	Fb550
Aantal ringbeugels/meter hoogte	5	Voldoet

Keuze Betonklasse	A	B	C	D
	C55/67	C70/85	C80/95	C90/105
fck	55	70	80	90
yck	1.5	1.5	1.5	1.5
fcd	-36.7	-46.7	-53.3	-60.0
Trekspanning	0	0	0	0

Optredende spanningen

Segment	1		
Ingevulde wanddikte	500		
	Voet	Top	
Buitendiameter	3200	2744	mm
Buitenomtrek	10053	8621	mm
Wanddikte	500	500	mm
Binnendiameter	2200	1744	mm
Doorsnede	Hol	Hol	
Omtrek/dikte	20.11	17.24	Verhouding
Oppervlak	4241150	3525344	mm2
Weerstandsmoment	2498302470	1697893326	mm3
Maximale moment	54861	kNm	
Maximale moment + 2de orde	60347	kNm	
Maximaal dwarskracht	1325	kN	
Maximaal torsiemoment	1836522	kNmm	
Maximaal normaalkracht	4076	kN	
Spanning tgv normaalkracht	1.0	N/mm2	
Spanning tgv moment	25.3	N/mm2	
2de orde effect verrekening	10%		
Factor e.g	1.2		
Maximale drukspanning	-26.2	Mpa	
Toelaatbare spanning	-46.7	Komende uit betonklasse	
Maximale trekspanning	24.5	MPa	
Toelaatbare trekspanning	0.0	MPa	

Voorspanning

Benodigde voorspanning ULS	24.5	Mpa
Benodigde voorspanning SLS	20	Mpa
Benodigde voorspankracht	99389	kN
Resulterende betonspanningen		
Trekzijde	0	Mpa
Drukzijde	-51	Mpa
Na relaxatie	-45	MPa
Keuze voorspankabels	FeP1860	
Toelaatbare spanning	1200	MPa
Astreng	150	mm2
streng/kabel	19	
Akabel	2850	mm2
Benodigde voorspankracht	99389	kN
Nkabel; benodigd	30	
Nkabel; `toegepast Buiten	20	
Nkabel; `toegepast Binnen	12	
Ankerverdeling top		
Gegeven E6-19		
Randafstand ankers	230	mm
Minimale hoh-afstand ankers	300	mm
Anker circel buiten	2284	mm
Anker cirkel binnen	1684	mm
Omtrek ankercirkel buiten	7176	mm
Omtrek ankercirkel binnen	5291	mm
Aantal plaatsbare ankers buitenring	23	
Aantal plaatsbare ankers binnenring	17	

Afschuiving in wapening door dwarskracht **(NEN-EN 1992-1-1 Hfst. 6.2.3)**

Max. dwarskracht in segment	1325	kN
Max. dwarskracht / doorsnede	1315	kN
Maximale optredende afschuiving in de wand	1315	kN
Hoek loodrecht dwarskracht/drukdiagonaal	30	21,8≤Θ≤45
cot Θ	2	hoek
alfa	80	
cot alfa	0.18	
Asw	113	mm2
s	200	mm
z (horende max. dwarskracht)	2756	mm
fywd	478	Mpa
VRD,S	7004	kN
Toetsing afschuiving door dwarskracht	0.19	

Toetsing betonspanning	0.97	Voldoet
Toetsing afschuiving in wand	0.19	Voldoet

Afschuiving in wapening door torsie

Maximaal torsie	1836522	kNmm
Maximaal afschuiving torsie / doorsnede	1628	kN
Maximaal dwarskracht bij torsie	596	kN
Max. afschuiving wand door dwarskracht	596	kN
Hoek loodrecht dwarskracht/drukdiagonaal	30	21,8≤Θ≤45
cot Θ	2	hoek
alfa	80	
cot alfa	0.18	
Asw	113	mm2
s	200	mm
z (dwarskracht)	2756	mm
z (torsie)	7087	mm
fywd	478	Mpa
VRD,max (dwarskracht)	7004	kN
VRD,max (torsie)	18012	kN
Toetsing afschuiving door dwarskracht	0.09	
Toetsing afschuiving door torsie	0.09	
Totaal	0.18	

W4HL400 Bijlage F

Segment	**2**	
Lengte	**12**	**m**
Gewicht	**85.8**	**ton**

Betonklasse	B	Voldoet
Voorspananker	FeP1860	
Nkabel; `toegepast Buiten	18	Voldoet
Nkabel; `toegepast Binnen	8	
Dwarswapening	12	rond
Materiaal	550	Fb550
Aantal ringbeugels/meter hoogte	5	Voldoet

Keuze Betonklasse	A	B	C	D
	C55/67	C70/85	C80/95	C90/105
fck	55	70	80	90
yck	1.5	1.5	1.5	1.5
fcd	-36.7	-46.7	-53.3	-60.0
Trekspanning	0	0	0	0

Optredende spanningen

Segment	2		
Ingevulde wanddikte	450		
	Voet	Top	
Buitendiameter	2744	2289	mm
Buitenomtrek	8621	7190	mm
Wanddikte	450	450	mm
Binnendiameter	1844	1389	mm
Doorsnede	Hol	Hol	
Omtrek/dikte	19.16	15.98	Verhouding
Oppervlak	3243496	2599270	mm2
Weerstandsmoment	1615165287	1017335590	mm3
Maximale moment	39018	kNm	
Maximale moment + 2de orde	42920	kNm	
Maximaal dwarskracht	1315	kN	
Maximaal torsiemoment	1836522	kNmm	
Maximaal normaalkracht	2734	kN	
Spanning tgv normaalkracht	0.8	N/mm2	
Spanning tgv moment	26.6	N/mm2	
2de orde effect verrekening	10%		
Factor e.g	1.2		
Maximale drukspanning	-27.4	Mpa	
Toelaatbare spanning	-46.7	Komende uit betonklasse	
Maximale trekspanning	26.0	MPa	
Toelaatbare trekspanning	0.0	MPa	

Voorspanning

Benodigde voorspanning ULS	26.0	Mpa
Benodigde voorspanning SLS	21	Mpa
Benodigde voorspankracht	84152	kN
Resulterende betonspanningen		
Trekzijde	0	Mpa
Drukzijde	-53	Mpa
Na relaxatie	-45	MPa
Keuze voorspankabels	FeP1860	
Toelaatbare spanning	1200	MPa
Astreng	150	mm2
streng/kabel	19	
Akabel	2850	mm2
Benodigde voorspankracht	84152	kN
Nkabel; benodigd	25	
Nkabel; `toegepast Buiten	18	
Nkabel; `toegepast Binnen	8	
Ankerverdeling top		
Gegeven E6-19		
Randafstand ankers	230	mm
Minimale hoh-afstand ankers	300	mm
Anker circel buiten	1829	mm
Anker cirkel binnen	1229	mm
Omtrek ankercirkel buiten	5745	mm
Omtrek ankercirkel binnen	3860	mm
Aantal plaatsbare ankers buitenring	19	
Aantal plaatsbare ankers binnenring	12	

Afschuiving in wapening door dwarskracht **(NEN-EN 1992-1-1 Hfst. 6.2.3)**

Max. dwarskracht in segment	1315	kN
Max. dwarskracht / doorsnede	1307	kN
Maximale optredende afschuiving in de wand	1307	kN
Hoek loodrecht dwarskracht/drukdiagonaal	30	21,8≤Θ≤45
cot Θ	2	hoek
alfa	80	
cot alfa	0.18	
Asw	113	mm2
s	200	mm
z (horende max. dwarskracht)	2348	mm
fywd	478	Mpa
VRD,S	5967	kN
Toetsing afschuiving door dwarskracht	0.22	

Toetsing betonspanning	0.97	Voldoet
Toetsing afschuiving in wand	0.23	Voldoet

Afschuiving in wapening door torsie

Maximaal torsie	1836522	kNmm
Maximaal afschuiving torsie / doorsnede	1985	kN
Maximaal dwarskracht bij torsie	592	kN
Max. afschuiving wand door dwarskracht	592	kN
Hoek loodrecht dwarskracht/drukdiagonaal	30	21,8≤Θ≤45
cot Θ	2	hoek
alfa	80	
cot alfa	0.18	
Asw	113	mm2
s	200	mm
z (dwarskracht)	2348	mm
z (torsie)	5812	mm
fywd	478	Mpa
VRD,max (dwarskracht)	5967	kN
VRD,max (torsie)	14770	kN
Toetsing afschuiving door dwarskracht	0.10	
Toetsing afschuiving door torsie	0.13	
Totaal	0.23	

W4HL400 Bijlage F

Segment	**3**	
Lengte	**12**	**m**
Gewicht	**61.1**	**ton**

Betonklasse	B	Voldoet
Voorspananker	FeP1860	
Nkabel; `toegepast Buiten	14	Voldoet
Nkabel; `toegepast Binnen	5	
Dwarswapening	12	rond
Materiaal	550	Fb550
Aantal ringbeugels/meter hoogte	5	Voldoet

Keuze Betonklasse	A	B	C	D
	C55/67	C70/85	C80/95	C90/105
fck	55	70	80	90
yck	1.5	1.5	1.5	1.5
fcd	-36.7	-46.7	-53.3	-60.0
Trekspanning	0	0	0	0

Optredende spanningen

Segment	3		
Ingevulde wanddikte	400		
	Voet	Top	
Buitendiameter	2289	1833	mm
Buitenomtrek	7190	5758	mm
Wanddikte	400	400	mm
Binnendiameter	1489	1033	mm
Doorsnede	Hol	Hol	
Omtrek/dikte	17.97	14.40	Verhouding
Oppervlak	2373294	1800650	mm2
Weerstandsmoment	966186267	543569748	mm3
Maximale moment	23534	kNm	
Maximale moment + 2de orde	25887	kNm	
Maximaal dwarskracht	1177	kN	
Maximaal torsiemoment	1836522	kNmm	
Maximaal normaalkracht	1706	kN	
Spanning tgv normaalkracht	0.7	N/mm2	
Spanning tgv moment	26.8	N/mm2	
2de orde effect verrekening	10%		
Factor e.g	1.2		
Maximale drukspanning	-27.5	Mpa	
Toelaatbare spanning	-46.7	Komende uit betonklasse	
Maximale trekspanning	26.3	MPa	
Toelaatbare trekspanning	0.0	MPa	

Voorspanning

Benodigde voorspanning ULS	26.3	Mpa
Benodigde voorspanning SLS	22	Mpa
Benodigde voorspankracht	62330	kN
Resulterende betonspanningen		
Trekzijde	0	Mpa
Drukzijde	-54	Mpa
Na relaxatie	-46	MPa
Keuze voorspankabels	FeP1860	
Toelaatbare spanning	1200	MPa
Astreng	150	mm2
streng/kabel	19	
Akabel	2850	mm2
Benodigde voorspankracht	62330	kN
Nkabel; benodigd	19	
Nkabel; `toegepast Buiten	14	
Nkabel; `toegepast Binnen	5	
Ankerverdeling top		
Gegeven E6-19		
Randafstand ankers	230	mm
Minimale hoh-afstand ankers	300	mm
Anker circel buiten	1373	mm
Anker cirkel binnen	773	mm
Omtrek ankercirkel buiten	4313	mm
Omtrek ankercirkel binnen	2428	mm
Aantal plaatsbare ankers buitenring	14	
Aantal plaatsbare ankers binnenring	8	

Afschuiving in wapening door dwarskracht **(NEN-EN 1992-1-1 Hfst. 6.2.3)**

Max. dwarskracht in segment	1177	kN
Max. dwarskracht / doorsnede	1171	kN
Maximale optredende afschuiving in de wand	1171	kN
Hoek loodrecht dwarskracht/drukdiagonaal	30	21,8≤Θ≤45
cot Θ	2	hoek
alfa	80	
cot alfa	0.18	
Asw	113	mm2
s	200	mm
z (horende max. dwarskracht)	1964	mm
fywd	478	Mpa
VRD,S	4991	kN
Toetsing afschuiving door dwarskracht	0.23	

Toetsing betonspanning	0.98	Voldoet
Toetsing afschuiving in wand	0.29	Voldoet

Afschuiving in wapening door torsie

Maximaal torsie	1836522	kNmm
Maximaal afschuiving torsie / doorsnede	2348	kN
Maximaal dwarskracht bij torsie	530	kN
Max. afschuiving wand door dwarskracht	530	kN
Hoek loodrecht dwarskracht/drukdiagonaal	30	21,8≤Θ≤45
cot Θ	2	hoek
alfa	80	
cot alfa	0.18	
Asw	113	mm2
s	200	mm
z (dwarskracht)	1964	mm
z (torsie)	4913	mm
fywd	478	Mpa
VRD,max (dwarskracht)	4991	kN
VRD,max (torsie)	12487	kN
Toetsing afschuiving door dwarskracht	0.11	
Toetsing afschuiving door torsie	0.19	
Totaal	0.29	

W4HL400 Bijlage F

Segment	**4**	
Lengte	**12**	**m**
Gewicht	**35.9**	**ton**

Betonklasse	B	Voldoet
Voorspananker	FeP1860	
Nkabel; `toegepast Buiten	8	Voldoet
Nkabel; `toegepast Binnen	3	
Dwarswapening	12	rond
Materiaal	550	Fb550
Aantal ringbeugels/meter hoogte	5	Voldoet

Keuze Betonklasse	A	B	C	D
	C55/67	C70/85	C80/95	C90/105
fck	55	70	80	90
yck	1.5	1.5	1.5	1.5
fcd	-36.7	-46.7	-53.3	-60.0
Trekspanning	0	0	0	0
	0			
	0			

Optredende spanningen

Segment	4		
Ingevulde wanddikte	300		
	Voet	Top	
Buitendiameter	1833	1377	mm
Buitenomtrek	5758	4327	mm
Wanddikte	300	300	mm
Binnendiameter	1233	777	mm
Doorsnede	Hol	Hol	
Omtrek/dikte	19.19	14.42	Verhouding
Oppervlak	1444735	1015251	mm2
Weerstandsmoment	480777384	230440168	mm3
Maximale moment	10799	kNm	
Maximale moment + 2de orde	11879	kNm	
Maximaal dwarskracht	814	kN	
Maximaal torsiemoment	1277140	kNmm	
Maximaal normaalkracht	899	kN	
Spanning tgv normaalkracht	0.6	N/mm2	
Spanning tgv moment	24.7	N/mm2	
2de orde effect verrekening	10%		
Factor e.g	1.2		
Maximale drukspanning	-25.4	Mpa	
Toelaatbare spanning	-46.7	Komende uit betonklasse	
Maximale trekspanning	24.3	MPa	
Toelaatbare trekspanning	0.0	MPa	

Voorspanning

Benodigde voorspanning ULS	24.3	Mpa
Benodigde voorspanning SLS	20	Mpa
Benodigde voorspankracht	35044	kN
Resulterende betonspanningen		
Trekzijde	0	Mpa
Drukzijde	-50	Mpa
Na relaxatie	-44	MPa
Keuze voorspankabels	FeP1860	
Toelaatbare spanning	1200	MPa
Astreng	150	mm2
streng/kabel	19	
Akabel	2850	mm2
Benodigde voorspankracht	35044	kN
Nkabel; benodigd	11	
Nkabel; `toegepast Buiten	8	
Nkabel; `toegepast Binnen	3	
Ankerverdeling top		
Gegeven E6-19		
Randafstand ankers	230	mm
Minimale hoh-afstand ankers	300	mm
Anker circel buiten	917	mm
Anker cirkel binnen	317	mm
Omtrek ankercirkel buiten	2882	mm
Omtrek ankercirkel binnen	997	mm
Aantal plaatsbare ankers buitenring	9	
Aantal plaatsbare ankers binnenring	3	

Afschuiving in wapening door dwarskracht **(NEN-EN 1992-1-1 Hfst. 6.2.3)**

Max. dwarskracht in segment	814	kN
Max. dwarskracht / doorsnede	809	kN
Maximale optredende afschuiving in de wand	809	kN
Hoek loodrecht dwarskracht/drukdiagonaal	30	21,8≤Θ≤45
cot Θ	2	hoek
alfa	80	
cot alfa	0.18	
Asw	113	mm2
s	200	mm
z (horende max. dwarskracht)	1556	mm
fywd	478	Mpa
VRD,S	3954	kN
Toetsing afschuiving door dwarskracht	0.20	

Toetsing betonspanning	0.93	Voldoet
Toetsing afschuiving in wand	0.30	Voldoet

Afschuiving in wapening door torsie

Maximaal torsie	1277140	kNmm
Maximaal afschuiving torsie / doorsned	2034	kN
Maximaal dwarskracht bij torsie	366	kN
Max. afschuiving wand door dwarskra	366	kN
Hoek loodrecht dwarskracht/drukdiago	30	21,8≤Θ≤45
cot Θ	2	hoek
alfa	80	
cot alfa	0.18	
Asw	113	mm2
s	200	mm
z (dwarskracht)	1556	mm
z (torsie)	3946	mm
fywd	478	Mpa
VRD,max (dwarskracht)	3954	kN
VRD,max (torsie)	10028	kN
Toetsing afschuiving door dwarskracht	0.09	
Toetsing afschuiving door torsie	0.20	
Totaal	0.30	

W4HL400 Bijlage F

Segment	**5**	
Lengte	**12**	**m**
Gewicht	**19.3**	**ton**

Betonklasse	A	Voldoet
Voorspananker	FeP1860	
Nkabel; `toegepast Buiten	4	Voldoet
Nkabel; `toegepast Binnen	0	
Dwarswapening	12	rond
Materiaal	550	Fb550
Aantal ringbeugels/meter hoogte	5	Voldoet

Keuze Betonklasse	A	B	C	D
	C55/67	C70/85	C80/95	C90/105
fck	55	70	80	90
yck	1.5	1.5	1.5	1.5
fcd	-36.7	-46.7	-53.3	-60.0
Trekspanning	0	0	0	0

Optredende spanningen

Segment	5		
Ingevulde wanddikte	200		
	Voet	Top	
Buitendiameter	1377	922	mm
Buitenomtrek	4327	2895	mm
Wanddikte	200	200	mm
Binnendiameter	977	522	mm
Doorsnede	Hol	Hol	
Omtrek/dikte	21.63	14.48	Verhouding
Oppervlak	739666	453344	mm2
Weerstandsmoment	191444716	68945897	mm3
Maximale moment	2915	kNm	
Maximale moment + 2de orde	3206	kNm	
Maximaal dwarskracht	443	kN	
Maximaal torsiemoment	707445	kNmm	
Maximaal normaalkracht	387	kN	
Spanning tgv normaalkracht	0.5	N/mm2	
Spanning tgv moment	16.8	N/mm2	
2de orde effect verrekening	10%		
Factor e.g	1.2		
Maximale drukspanning	-17.3	Mpa	
Toelaatbare spanning	-36.7	Komende uit betonklasse	
Maximale trekspanning	16.3	MPa	
Toelaatbare trekspanning	0.0	MPa	

Voorspanning

Benodigde voorspanning ULS	16.3	Mpa
Benodigde voorspanning SLS	13	Mpa
Benodigde voorspankracht	12110	kN
Resulterende betonspanningen		
Trekzijde	0	Mpa
Drukzijde	-34	Mpa
Na relaxatie	-30	MPa
Keuze voorspankabels	FeP1860	
Toelaatbare spanning	1200	MPa
Astreng	150	mm2
streng/kabel	19	
Akabel	2850	mm2
Benodigde voorspankracht	12110	kN
Nkabel; benodigd	4	
Nkabel; `toegepast Buiten	4	
Nkabel; `toegepast Binnen	0	
Ankerverdeling top		
Gegeven E6-19		
Randafstand ankers	230	mm
Minimale hoh-afstand ankers	300	mm
Anker circel buiten	462	mm
Anker cirkel binnen	-138	mm
Omtrek ankercirkel buiten	1450	mm
Omtrek ankercirkel binnen	-435	mm
Aantal plaatsbare ankers buitenring	4	
Aantal plaatsbare ankers binnenring	-1	

Afschuiving in wapening door dwarskracht **(NEN-EN 1992-1-1 Hfst. 6.2.3)**

Max. dwarskracht in segment		443	kN
Max. dwarskracht / doorsnede		440	kN
Maximale optredende afschuiving in de wand		440	kN
Hoek loodrecht dwarskracht/drukdiagonaal		30	21,8≤Θ≤45
cot Θ		2	hoek
alfa		80	
cot alfa		0.18	
Asw		113	mm2
s		200	mm
z (horende max. dwarskracht)		1172	mm
fywd		478	Mpa
VRD,S		2979	kN
Toetsing afschuiving door dwarskracht		0.15	0
	0	0	0

Toetsing betonspanning	0.83	Voldoet
Toetsing afschuiving in wand	0.25	Voldoet

Afschuiving in wapening door torsie

Maximaal torsie	707445	kNmm
Maximaal afschuiving torsie / doorsnec	1456	kN
Maximaal dwarskracht bij torsie	199	kN
Max. afschuiving wand door dwarskra	199	kN
Hoek loodrecht dwarskracht/drukdiago	30	21,8≤Θ≤45
cot Θ	2	hoek
alfa	80	
cot alfa	0.18	
Asw	113	mm2
s	200	mm
z (dwarskracht)	1172	mm
z (torsie)	3054	mm
fywd	478	Mpa
VRD,max (dwarskracht)	2979	kN
VRD,max (torsie)	7760	kN
Toetsing afschuiving door dwarskracht	0.07	
Toetsing afschuiving door torsie	0.19	
Totaal	0.25	

W4HL400 Bijlage F

Segment	**6**	
Lengte	**3.2**	**m**
Gewicht	**4.5**	**ton**

Betonklasse	A	Voldoet niet
Voorspananker	FeP1860	
Nkabel; `toegepast Buiten	2	Voldoet
Nkabel; `toegepast Binnen	0	
Dwarswapening	12	rond
Materiaal	550	Fb550
Aantal ringbeugels/meter hoogte	5	Voldoet

Keuze Betonklasse	A	B	C	D
	C55/67	C70/85	C80/95	C90/105
fck	55	70	80	90
yck	1.5	1.5	1.5	1.5
fcd	-36.7	-46.7	-53.3	-60.0
Trekspanning	0	0	0	0

Optredende spanningen

Segment	6		
Ingevulde wanddikte	150		
	Voet	Top	
Buitendiameter	922	800	mm
Buitenomtrek	2895	2513	mm
Wanddikte	150	150	mm
Binnendiameter	622	500	mm
Doorsnede	Hol	Hol	
Omtrek/dikte	19.30	16.76	Verhouding
Oppervlak	363570	306305	mm2
Weerstandsmoment	60929874	42595579	mm3
Maximale moment	209	kNm	
Maximale moment + 2de orde	230	kNm	
Maximaal dwarskracht	67	kN	
Maximaal torsiemoment	0	kNmm	
Maximaal normaalkracht	72	kN	
Spanning tgv normaalkracht	0.1	N/mm2	
Spanning tgv moment	24.7	N/mm2	
2de orde effect verrekening	10%		
Factor e.g	1.2		
Maximale drukspanning	-24.8	Mpa	
Toelaatbare spanning	-36.7	Komende uit betonklasse	
Maximale trekspanning	24.7	MPa	
Toelaatbare trekspanning	0.0	MPa	

Voorspanning

Benodigde voorspanning ULS	24.7	Mpa
Benodigde voorspanning SLS	20	Mpa
Benodigde voorspankracht	1943	kN
Resulterende betonspanningen		
Trekzijde	0	Mpa
Drukzijde	-50	Mpa
Na relaxatie	-45	MPa
Keuze voorspankabels	FeP1860	
Toelaatbare spanning	1200	MPa
Astreng	150	mm2
streng/kabel	19	
Akabel	2850	mm2
Benodigde voorspankracht	1943	kN
Nkabel; benodigd	1	
Nkabel; `toegepast Buiten	2	
Nkabel; `toegepast Binnen	0	
Ankerverdeling top		
Gegeven E6-19		
Randafstand ankers	230	mm
Minimale hoh-afstand ankers	300	mm
Anker circel buiten	340	mm
Anker cirkel binnen	-260	mm
Omtrek ankercirkel buiten	1068	mm
Omtrek ankercirkel binnen	-817	mm
Aantal plaatsbare ankers buitenring	3	
Aantal plaatsbare ankers binnenring	-2	

Afschuiving in wapening door dwarskracht **(NEN-EN 1992-1-1 Hfst. 6.2.3)**

Max. dwarskracht in segment	67	kN
Max. dwarskracht / doorsnede	66	kN
Maximale optredende afschuiving in de wand	66	kN
Hoek loodrecht dwarskracht/drukdiagonaal	30	21,8≤Θ≤45
cot Θ	2	hoek
alfa	80	
cot alfa	0.18	
Asw	113	mm2
s	200	mm
z (horende max. dwarskracht)	800	mm
fywd	478	Mpa
VRD,S	2033	kN
Toetsing afschuiving door dwarskracht	0.03	

Toetsing betonspanning	1.24	Voldoet niet
Toetsing afschuiving in wand	0.08	Voldoet

Afschuiving in wapening door torsie

Maximaal torsie	0	kNmm
Maximaal afschuiving torsie / doorsne	397	kN
Maximaal dwarskracht bij torsie	0	kN
Max. afschuiving wand door dwarskra	0	kN
Hoek loodrecht dwarskracht/drukdiago	30	21,8≤Θ≤45
cot Θ	2	hoek
alfa	80	
cot alfa	0.18	
Asw	113	mm2
s	200	mm
z (dwarskracht)	800	mm
z (torsie)	2042	mm
fywd	478	Mpa
VRD,max (dwarskracht)	2033	kN
VRD,max (torsie)	5190	kN
Toetsing afschuiving door dwarskracht	0.00	
Toetsing afschuiving door torsie	0.08	
Totaal	0.08	

W4S350 Bijlage C

Segment	**1**	
Lengte	**12**	**m**
Gewicht	**67.5**	**ton**

Betonklasse	A	Voldoet
Voorspananker	FeP1860	
Nkabel; `toegepast Buiten	12	Voldoet
Nkabel; `toegepast Binnen	4	
Dwarswapening	12	rond
Materiaal	550	Fb550
Aantal ringbeugels/meter hoogte	5	Voldoet

Keuze Betonklasse	A	B	C	D
	C55/67	C70/85	C80/95	C90/105
fck	55	70	80	90
yck	1.5	1.5	1.5	1.5
fcd	-36.7	-46.7	-53.3	-60.0
Trekspanning	0	0	0	0

Optredende spanningen

Segment	1		
Ingevulde wanddikte	450		
	Voet	Top	
Buitendiameter	2200	1898	mm
Buitenomtrek	6912	5962	mm
Wanddikte	450	450	mm
Binnendiameter	1300	998	mm
Doorsnede	Hol	Hol	
Omtrek/dikte	15.36	13.25	Verhouding
Oppervlak	2474004	2046838	mm2
Weerstandsmoment	917911791	619804059	mm3
Maximale moment	15811	kNm	
Maximale moment + 2de orde	17392	kNm	
Maximaal dwarskracht	452	kN	
Maximaal torsiemoment	0	kNmm	
Maximaal normaalkracht	2253	kN	
Spanning tgv normaalkracht	0.9	N/mm2	
Spanning tgv moment	19.0	N/mm2	
2de orde effect verrekening	10%		
Factor e.g	1.2		
Maximale drukspanning	-19.9	Mpa	
Toelaatbare spanning	-36.7	Komende uit betonklasse	
Maximale trekspanning	18.3	MPa	
Toelaatbare trekspanning	0.0	MPa	

Voorspanning

Benodigde voorspanning ULS	18.3	Mpa
Benodigde voorspanning SLS	13	Mpa
Benodigde voorspankracht	45185	kN
Resulterende betonspanningen		
Trekzijde	0	Mpa
Drukzijde	-38	Mpa
Na relaxatie	-35	MPa
Keuze voorspankabels	FeP1860	
Toelaatbare spanning	1200	MPa
Astreng	150	mm2
streng/kabel	19	
Akabel	2850	mm2
Benodigde voorspankracht	45185	kN
Nkabel; benodigd	14	
Nkabel; `toegepast Buiten	12	
Nkabel; `toegepast Binnen	4	
Ankerverdeling top		
Gegeven E6-19		
Randafstand ankers	230	mm
Minimale hoh-afstand ankers	300	mm
Anker circel buiten	1438	mm
Anker cirkel binnen	838	mm
Omtrek ankercirkel buiten	4517	mm
Omtrek ankercirkel binnen	2632	mm
Aantal plaatsbare ankers buitenring	15	
Aantal plaatsbare ankers binnenring	8	

Afschuiving in wapening door dwarskracht **(NEN-EN 1992-1-1 Hfst. 6.2.3)**

Max. dwarskracht in segment	452	kN
Max. dwarskracht / doorsnede	430	kN
Maximale optredende afschuiving in de wand	430	kN
Hoek loodrecht dwarskracht/drukdiagonaal	30	21,8≤Θ≤45
cot Θ	2	hoek
alfa	80	
cot alfa	0.18	
Asw	113	mm2
s	200	mm
z (horende max. dwarskracht)	1899	mm
fywd	478	Mpa
VRD,S	4826	kN
Toetsing afschuiving door dwarskracht	0.09	

Toetsing betonspanning	0.95	Voldoet
Toetsing afschuiving in wand	0.09	Voldoet

Afschuiving in wapening door torsie

Maximaal torsie	0	kNmm
Maximaal afschuiving torsie / doorsnede	0	kN
Maximaal dwarskracht bij torsie	0	kN
Max. afschuiving wand door dwarskracht	0	kN
Hoek loodrecht dwarskracht/drukdiagonaal	30	21,8≤Θ≤45
cot Θ	2	hoek
alfa	80	
cot alfa	0.18	
Asw	113	mm2
s	200	mm
z (dwarskracht)	1899	mm
z (torsie)	1100	mm
fywd	478	Mpa
VRD,max (dwarskracht)	4826	kN
VRD,max (torsie)	2794	kN
Toetsing afschuiving door dwarskracht	0.00	
Toetsing afschuiving door torsie	0.00	
Totaal	0.00	

W4S350 Bijlage C

Segment	**2**	
Lengte	**12**	**m**
Gewicht	**50.2**	**ton**

Betonklasse	A	Voldoet
Voorspananker	FeP1860	
Nkabel; `toegepast Buiten	8	Voldoet
Nkabel; `toegepast Binnen	4	
Dwarswapening	12	rond
Materiaal	550	Fb550
Aantal ringbeugels/meter hoogte	5	Voldoet

Keuze Betonklasse	A	B	C	D
	C55/67	C70/85	C80/95	C90/105
fck	55	70	80	90
yck	1.5	1.5	1.5	1.5
fcd	-36.7	-46.7	-53.3	-60.0
Trekspanning	0	0	0	0

Optredende spanningen

Segment	2		
Ingevulde wanddikte	400		
	Voet	Top	
Buitendiameter	1898	1596	mm
Buitenomtrek	5962	5013	mm
Wanddikte	400	400	mm
Binnendiameter	1098	796	mm
Doorsnede	Hol	Hol	
Omtrek/dikte	14.91	12.53	Verhouding
Oppervlak	1882243	1502540	mm2
Weerstandsmoment	595943826	374216818	mm3
Maximale moment	10437	kNm	
Maximale moment + 2de orde	11481	kNm	
Maximaal dwarskracht	429	kN	
Maximaal torsiemoment	0	kNmm	
Maximaal normaalkracht	1459	kN	
Spanning tgv normaalkracht	0.8	N/mm2	
Spanning tgv moment	19.4	N/mm2	
2de orde effect verrekening	10%		
Factor e.g	1.2		
Maximale drukspanning	-20.2	Mpa	
Toelaatbare spanning	-36.7	Komende uit betonklasse	
Maximale trekspanning	18.8	MPa	
Toelaatbare trekspanning	0.0	MPa	

Voorspanning

Benodigde voorspanning ULS	18.8	Mpa
Benodigde voorspanning SLS	13	Mpa
Benodigde voorspankracht	35319	kN
Resulterende betonspanningen		
Trekzijde	0	Mpa
Drukzijde	-39	Mpa
Na relaxatie	-35	MPa
Keuze voorspankabels	FeP1860	
Toelaatbare spanning	1200	MPa
Astreng	150	mm2
streng/kabel	19	
Akabel	2850	mm2
Benodigde voorspankracht	35319	kN
Nkabel; benodigd	11	
Nkabel; `toegepast Buiten	8	
Nkabel; `toegepast Binnen	4	
Ankerverdeling top		
Gegeven E6-19		
Randafstand ankers	230	mm
Minimale hoh-afstand ankers	300	mm
Anker circel buiten	1136	mm
Anker cirkel binnen	536	mm
Omtrek ankercirkel buiten	3568	mm
Omtrek ankercirkel binnen	1683	mm
Aantal plaatsbare ankers buitenring	11	
Aantal plaatsbare ankers binnenring	5	

Afschuiving in wapening door dwarskracht **(NEN-EN 1992-1-1 Hfst. 6.2.3)**

Max. dwarskracht in segment	429	kN
Max. dwarskracht / doorsnede	388	kN
Maximale optredende afschuiving in de wand	388	kN
Hoek loodrecht dwarskracht/drukdiagonaal	30	21,8≤Θ≤45
cot Θ	2	hoek
alfa	80	
cot alfa	0.18	
Asw	113	mm2
s	200	mm
z (horende max. dwarskracht)	1591	mm
fywd	478	Mpa
VRD,S	4043	kN
Toetsing afschuiving door dwarskracht	0.10	

Toetsing betonspanning	0.96	Voldoet
Toetsing afschuiving in wand	0.10	Voldoet

Afschuiving in wapening door torsie

Maximaal torsie	0	kNmm
Maximaal afschuiving torsie / doorsnede	0	kN
Maximaal dwarskracht bij torsie	0	kN
Max. afschuiving wand door dwarskracht	0	kN
Hoek loodrecht dwarskracht/drukdiagonaal	30	21,8≤Θ≤45
cot Θ	2	hoek
alfa	80	
cot alfa	0.18	
Asw	113	mm2
s	200	mm
z (dwarskracht)	1591	mm
z (torsie)	1257	mm
fywd	478	Mpa
VRD,max (dwarskracht)	4043	kN
VRD,max (torsie)	3194	kN
Toetsing afschuiving door dwarskracht	0.00	
Toetsing afschuiving door torsie	0.00	
Totaal	0.00	

W4S350 Bijlage C

Segment	**3**	
Lengte	**12**	**m**
Gewicht	**30.6**	**ton**

Betonklasse	A	Voldoet
Voorspananker	FeP1860	
Nkabel; `toegepast Buiten	6	Voldoet
Nkabel; `toegepast Binnen	2	
Dwarswapening	12	rond
Materiaal	550	Fb550
Aantal ringbeugels/meter hoogte	5	Voldoet

Keuze Betonklasse	A	B	C	D
	C55/67	C70/85	C80/95	C90/105
fck	55	70	80	90
yck	1.5	1.5	1.5	1.5
fcd	-36.7	-46.7	-53.3	-60.0
Trekspanning	0	0	0	0

Optredende spanningen

Segment	3		
Ingevulde wanddikte	300		
	Voet	Top	
Buitendiameter	1596	1294	mm
Buitenomtrek	5013	4064	mm
Wanddikte	300	300	mm
Binnendiameter	996	694	mm
Doorsnede	Hol	Hol	
Omtrek/dikte	16.71	13.55	Verhouding
Oppervlak	1221153	936375	mm2
Weerstandsmoment	338408263	194925224	mm3
Maximale moment	5434	kNm	
Maximale moment + 2de orde	5977	kNm	
Maximaal dwarskracht	387	kN	
Maximaal torsiemoment	0	kNmm	
Maximaal normaalkracht	860	kN	
Spanning tgv normaalkracht	0.7	N/mm2	
Spanning tgv moment	18.0	N/mm2	
2de orde effect verrekening	10%		
Factor e.g	1.2		
Maximale drukspanning	-18.7	Mpa	
Toelaatbare spanning	-36.7	Komende uit betonklasse	
Maximale trekspanning	17.5	MPa	
Toelaatbare trekspanning	0.0	MPa	

Voorspanning

Benodigde voorspanning ULS	17.5	Mpa
Benodigde voorspanning SLS	12	Mpa
Benodigde voorspankracht	21138	kN
Resulterende betonspanningen		
Trekzijde	0	Mpa
Drukzijde	-36	Mpa
Na relaxatie	-32	MPa
Keuze voorspankabels	FeP1860	
Toelaatbare spanning	1200	MPa
Astreng	150	mm2
streng/kabel	19	
Akabel	2850	mm2
Benodigde voorspankracht	21138	kN
Nkabel; benodigd	7	
Nkabel; `toegepast Buiten	6	
Nkabel; `toegepast Binnen	2	
Ankerverdeling top		
Gegeven E6-19		
Randafstand ankers	230	mm
Minimale hoh-afstand ankers	300	mm
Anker circel buiten	834	mm
Anker cirkel binnen	234	mm
Omtrek ankercirkel buiten	2619	mm
Omtrek ankercirkel binnen	734	mm
Aantal plaatsbare ankers buitenring	8	
Aantal plaatsbare ankers binnenring	2	

Afschuiving in wapening door dwarskracht **(NEN-EN 1992-1-1 Hfst. 6.2.3)**

Max. dwarskracht in segment	387	kN
Max. dwarskracht / doorsnede	380	kN
Maximale optredende afschuiving in de wand	380	kN
Hoek loodrecht dwarskracht/drukdiagonaal	30	21,8≤Θ≤45
cot Θ	2	hoek
alfa	80	
cot alfa	0.18	
Asw	113	mm2
s	200	mm
z (horende max. dwarskracht)	1479	mm
fywd	478	Mpa
VRD,S	3759	kN
Toetsing afschuiving door dwarskracht	0.10	

Toetsing betonspanning	0.88	Voldoet
Toetsing afschuiving in wand	0.10	Voldoet

Afschuiving in wapening door torsie

Maximaal torsie	0	kNmm
Maximaal afschuiving torsie / doorsnede	0	kN
Maximaal dwarskracht bij torsie	0	kN
Max. afschuiving wand door dwarskracht	0	kN
Hoek loodrecht dwarskracht/drukdiagonaal	30	21,8≤Θ≤45
cot Θ	2	hoek
alfa	80	
cot alfa	0.18	
Asw	113	mm2
s	200	mm
z (dwarskracht)	1479	mm
z (torsie)	1571	mm
fywd	478	Mpa
VRD,max (dwarskracht)	3759	kN
VRD,max (torsie)	3992	kN
Toetsing afschuiving door dwarskracht	0.00	
Toetsing afschuiving door torsie	0.00	
Totaal	0.00	

W4S350 Bijlage C

Segment	**4**	
Lengte	**12**	**m**
Gewicht	**20.8**	**ton**

Betonklasse	A	Voldoet
Voorspananker	FeP1860	
Nkabel; `toegepast Buiten	4	Voldoet
Nkabel; `toegepast Binnen	0	
Dwarswapening	12	rond
Materiaal	550	Fb550
Aantal ringbeugels/meter hoogte	5	Voldoet

Keuze Betonklasse	A	B	C	D
	C55/67	C70/85	C80/95	C90/105
fck	55	70	80	90
yck	1.5	1.5	1.5	1.5
fcd	-36.7	-46.7	-53.3	-60.0
Trekspanning	0	0	0	0
	0			
	0			

Optredende spanningen

Segment	4		
Ingevulde wanddikte	250		
	Voet	Top	
Buitendiameter	1294	991	mm
Buitenomtrek	4064	3114	mm
Wanddikte	250	250	mm
Binnendiameter	794	491	mm
Doorsnede	Hol	Hol	
Omtrek/dikte	16.25	12.46	Verhouding
Oppervlak	819583	582268	mm2
Weerstandsmoment	182390015	89881168	mm3
Maximale moment	1811	kNm	
Maximale moment + 2de orde	1992	kNm	
Maximaal dwarskracht	268	kN	
Maximaal torsiemoment	0	kNmm	
Maximaal normaalkracht	455	kN	
Spanning tgv normaalkracht	0.6	N/mm2	
Spanning tgv moment	11.0	N/mm2	
2de orde effect verrekening	10%		
Factor e.g	1.2		
Maximale drukspanning	-11.6	Mpa	
Toelaatbare spanning	-36.7	Komende uit betonklasse	
Maximale trekspanning	10.6	MPa	
Toelaatbare trekspanning	0.0	MPa	

Voorspanning

Benodigde voorspanning ULS	10.6	Mpa
Benodigde voorspanning SLS	7	Mpa
Benodigde voorspankracht	8643	kN
Resulterende betonspanningen		
Trekzijde	0	Mpa
Drukzijde	-22	Mpa
Na relaxatie	-20	MPa
Keuze voorspankabels	FeP1860	
Toelaatbare spanning	1200	MPa
Astreng	150	mm2
streng/kabel	19	
Akabel	2850	mm2
Benodigde voorspankracht	8643	kN
Nkabel; benodigd	3	
Nkabel; `toegepast Buiten	4	
Nkabel; `toegepast Binnen	0	
Ankerverdeling top		
Gegeven E6-19		
Randafstand ankers	230	mm
Minimale hoh-afstand ankers	300	mm
Anker circel buiten	531	mm
Anker cirkel binnen	-69	mm
Omtrek ankercirkel buiten	1669	mm
Omtrek ankercirkel binnen	-216	mm
Aantal plaatsbare ankers buitenring	5	
Aantal plaatsbare ankers binnenring	0	

Afschuiving in wapening door dwarskracht **(NEN-EN 1992-1-1 Hfst. 6.2.3)**

Max. dwarskracht in segment	268	kN
Max. dwarskracht / doorsnede	266	kN
Maximale optredende afschuiving in de wand	266	kN
Hoek loodrecht dwarskracht/drukdiagonaal	30	21,8≤Θ≤45
cot Θ	2	hoek
alfa	80	
cot alfa	0.18	
Asw	113	mm2
s	200	mm
z (horende max. dwarskracht)	1255	mm
fywd	478	Mpa
VRD,S	3189	kN
Toetsing afschuiving door dwarskracht	0.08	

Toetsing betonspanning	0.55	Voldoet
Toetsing afschuiving in wand	0.08	Voldoet

Afschuiving in wapening door torsie

Maximaal torsie	0	kNmm
Maximaal afschuiving torsie / doorsned	0	kN
Maximaal dwarskracht bij torsie	0	kN
Max. afschuiving wand door dwarskrac	0	kN
Hoek loodrecht dwarskracht/drukdiago	30	21,8≤Θ≤45
cot Θ	2	hoek
alfa	80	
cot alfa	0.18	
Asw	113	mm2
s	200	mm
z (dwarskracht)	1255	mm
z (torsie)	1728	mm
fywd	478	Mpa
VRD,max (dwarskracht)	3189	kN
VRD,max (torsie)	4391	kN
Toetsing afschuiving door dwarskracht	0.00	
Toetsing afschuiving door torsie	0.00	
Totaal	0.00	

W4S350 Bijlage C

Segment	**5**	
Lengte	**7.6**	**m**
Gewicht	**9.9**	**ton**

Betonklasse	A	Voldoet
Voorspananker	FeP1860	
Nkabel; `toegepast Buiten	2	Voldoet
Nkabel; `toegepast Binnen	0	
Dwarswapening	12	rond
Materiaal	550	Fb550
Aantal ringbeugels/meter hoogte	5	Voldoet

Keuze Betonklasse	A	B	C	D
	C55/67	C70/85	C80/95	C90/105
fck	55	70	80	90
yck	1.5	1.5	1.5	1.5
fcd	-36.7	-46.7	-53.3	-60.0
Trekspanning	0	0	0	0

Optredende spanningen

Segment	5		
Ingevulde wanddikte	200		
	Voet	Top	
Buitendiameter	991	800	mm
Buitenomtrek	3114	2513	mm
Wanddikte	200	200	mm
Binnendiameter	591	400	mm
Doorsnede	Hol	Hol	
Omtrek/dikte	15.57	12.57	Verhouding
Oppervlak	497230	376991	mm2
Weerstandsmoment	83542625	47123890	mm3
Maximale moment	127	kNm	
Maximale moment + 2de orde	139	kNm	
Maximaal dwarskracht	24	kN	
Maximaal torsiemoment	0	kNmm	
Maximaal normaalkracht	121	kN	
Spanning tgv normaalkracht	0.2	N/mm2	
Spanning tgv moment	1.7	N/mm2	
2de orde effect verrekening	10%		
Factor e.g	1.2		
Maximale drukspanning	-2.0	Mpa	
Toelaatbare spanning	-36.7	Komende uit betonklasse	
Maximale trekspanning	1.5	MPa	
Toelaatbare trekspanning	0.0	MPa	

Voorspanning

Benodigde voorspanning ULS	1.5	Mpa
Benodigde voorspanning SLS	1	Mpa
Benodigde voorspankracht	749	kN
Resulterende betonspanningen		
Trekzijde	0	Mpa
Drukzijde	-3	Mpa
Na relaxatie	-3	MPa
Keuze voorspankabels	FeP1860	
Toelaatbare spanning	1200	MPa
Astreng	150	mm2
streng/kabel	19	
Akabel	2850	mm2
Benodigde voorspankracht	749	kN
Nkabel; benodigd	1	
Nkabel; `toegepast Buiten	2	
Nkabel; `toegepast Binnen	0	
Ankerverdeling top		
Gegeven E6-19		
Randafstand ankers	230	mm
Minimale hoh-afstand ankers	300	mm
Anker circel buiten	340	mm
Anker cirkel binnen	-260	mm
Omtrek ankercirkel buiten	1068	mm
Omtrek ankercirkel binnen	-817	mm
Aantal plaatsbare ankers buitenring	3	
Aantal plaatsbare ankers binnenring	-2	

Afschuiving in wapening door dwarskracht **(NEN-EN 1992-1-1 Hfst. 6.2.3)**

Max. dwarskracht in segment		24	kN
Max. dwarskracht / doorsnede		24	kN
Maximale optredende afschuiving in de wand		24	kN
Hoek loodrecht dwarskracht/drukdiagonaal		30	21,8≤Θ≤45
cot Θ		2	hoek
alfa		80	
cot alfa		0.18	
Asw		113	mm2
s		200	mm
z (horende max. dwarskracht)		975	mm
fywd		478	Mpa
VRD,S		2478	kN
Toetsing afschuiving door dwarskracht		0.01	0
	0	0	0

Toetsing betonspanning	0.09	Voldoet
Toetsing afschuiving in wand	0.01	Voldoet

Afschuiving in wapening door torsie

Maximaal torsie	0	kNmm
Maximaal afschuiving torsie / doorsned	0	kN
Maximaal dwarskracht bij torsie	0	kN
Max. afschuiving wand door dwarskra	0	kN
Hoek loodrecht dwarskracht/drukdiago	30	21,8≤Θ≤45
cot Θ	2	hoek
alfa	80	
cot alfa	0.18	
Asw	113	mm2
s	200	mm
z (dwarskracht)	975	mm
z (torsie)	1885	mm
fywd	478	Mpa
VRD,max (dwarskracht)	2478	kN
VRD,max (torsie)	4790	kN
Toetsing afschuiving door dwarskracht	0.00	
Toetsing afschuiving door torsie	0.00	
Totaal	0.00	

W4S400 Bijlage E

Segment	**1**	
Lengte	**12**	**m**
Gewicht	**80.8**	**ton**

Betonklasse	A	Voldoet
Voorspananker	FeP1860	
Nkabel; `toegepast Buiten	12	Voldoet
Nkabel; `toegepast Binnen	8	
Dwarswapening	12	rond
Materiaal	550	Fb550
Aantal ringbeugels/meter hoogte	5	Voldoet

Keuze Betonklasse	A	B	C	D
	C55/67	C70/85	C80/95	C90/105
fck	55	70	80	90
yck	1.5	1.5	1.5	1.5
fcd	-36.7	-46.7	-53.3	-60.0
Trekspanning	0	0	0	0

Optredende spanningen

Segment	1		
Ingevulde wanddikte	500		
	Voet	Top	
Buitendiameter	2400	2097	mm
Buitenomtrek	7540	6587	mm
Wanddikte	500	500	mm
Binnendiameter	1400	1097	mm
Doorsnede	Hol	Hol	
Omtrek/dikte	15.08	13.17	Verhouding
Oppervlak	2984513	2508063	mm2
Weerstandsmoment	1200022944	837162843	mm3
Maximale moment	20789	kNm	
Maximale moment + 2de orde	22868	kNm	
Maximaal dwarskracht	523	kN	
Maximaal torsiemoment	0	kNmm	
Maximaal normaalkracht	2974	kN	
Spanning tgv normaalkracht	1.0	N/mm2	
Spanning tgv moment	19.3	N/mm2	
2de orde effect verrekening	10%		
Factor e.g	1.2		
Maximale drukspanning	-20.3	Mpa	
Toelaatbare spanning	-36.7	Komende uit betonklasse	
Maximale trekspanning	18.6	MPa	
Toelaatbare trekspanning	0.0	MPa	

Voorspanning

Benodigde voorspanning ULS	18.6	Mpa
Benodigde voorspanning SLS	13	Mpa
Benodigde voorspankracht	54643	kN
Resulterende betonspanningen		
Trekzijde	0	Mpa
Drukzijde	-39	Mpa
Na relaxatie	-35	MPa
Keuze voorspankabels	FeP1860	
Toelaatbare spanning	1200	MPa
Astreng	150	mm2
streng/kabel	19	
Akabel	2850	mm2
Benodigde voorspankracht	54643	kN
Nkabel; benodigd	16	
Nkabel; `toegepast Buiten	12	
Nkabel; `toegepast Binnen	8	
Ankerverdeling top		
Gegeven E6-19		
Randafstand ankers	230	mm
Minimale hoh-afstand ankers	300	mm
Anker circel buiten	1637	mm
Anker cirkel binnen	1037	mm
Omtrek ankercirkel buiten	5142	mm
Omtrek ankercirkel binnen	3257	mm
Aantal plaatsbare ankers buitenring	17	
Aantal plaatsbare ankers binnenring	10	

Afschuiving in wapening door dwarskracht **(NEN-EN 1992-1-1 Hfst. 6.2.3)**

Max. dwarskracht in segment	523	kN
Max. dwarskracht / doorsnede	499	kN
Maximale optredende afschuiving in de wand	499	kN
Hoek loodrecht dwarskracht/drukdiagonaal	30	21,8≤Θ≤45
cot Θ	2	hoek
alfa	80	
cot alfa	0.18	
Asw	113	mm2
s	200	mm
z (horende max. dwarskracht)	2104	mm
fywd	478	Mpa
VRD,S	5347	kN
Toetsing afschuiving door dwarskracht	0.09	

Toetsing betonspanning	0.96	Voldoet
Toetsing afschuiving in wand	0.09	Voldoet

Afschuiving in wapening door torsie

Maximaal torsie	0	kNmm
Maximaal afschuiving torsie / doorsnede	0	kN
Maximaal dwarskracht bij torsie	0	kN
Max. afschuiving wand door dwarskracht	0	kN
Hoek loodrecht dwarskracht/drukdiagonaal	30	21,8≤Θ≤45
cot Θ	2	hoek
alfa	80	
cot alfa	0.18	
Asw	113	mm2
s	200	mm
z (dwarskracht)	2104	mm
z (torsie)	942	mm
fywd	478	Mpa
VRD,max (dwarskracht)	5347	kN
VRD,max (torsie)	2395	kN
Toetsing afschuiving door dwarskracht	0.00	
Toetsing afschuiving door torsie	0.00	
Totaal	0.00	

W4S400 Bijlage E

Segment	**2**	
Lengte	**12**	**m**
Gewicht	**62.1**	**ton**

Betonklasse	A	Voldoet
Voorspananker	FeP1860	
Nkabel; `toegepast Buiten	10	Voldoet
Nkabel; `toegepast Binnen	6	
Dwarswapening	12	rond
Materiaal	550	Fb550
Aantal ringbeugels/meter hoogte	5	Voldoet

Keuze Betonklasse	A	B	C	D
	C55/67	C70/85	C80/95	C90/105
fck	55	70	80	90
yck	1.5	1.5	1.5	1.5
fcd	-36.7	-46.7	-53.3	-60.0
Trekspanning	0	0	0	0

Optredende spanningen

Segment	2		
Ingevulde wanddikte	450		
	Voet	Top	
Buitendiameter	2097	1793	mm
Buitenomtrek	6587	5634	mm
Wanddikte	450	450	mm
Binnendiameter	1197	893	mm
Doorsnede	Hol	Hol	
Omtrek/dikte	14.64	12.52	Verhouding
Oppervlak	2327942	1899137	mm2
Weerstandsmoment	808869668	531377409	mm3
Maximale moment	14662	kNm	
Maximale moment + 2de orde	16128	kNm	
Maximaal dwarskracht	498	kN	
Maximaal torsiemoment	0	kNmm	
Maximaal normaalkracht	2023	kN	
Spanning tgv normaalkracht	0.9	N/mm2	
Spanning tgv moment	20.0	N/mm2	
2de orde effect verrekening	10%		
Factor e.g	1.2		
Maximale drukspanning	-20.8	Mpa	
Toelaatbare spanning	-36.7	Komende uit betonklasse	
Maximale trekspanning	19.3	MPa	
Toelaatbare trekspanning	0.0	MPa	

Voorspanning

Benodigde voorspanning ULS	19.3	Mpa
Benodigde voorspanning SLS	13	Mpa
Benodigde voorspankracht	44921	kN
Resulterende betonspanningen		
Trekzijde	0	Mpa
Drukzijde	-40	Mpa
Na relaxatie	-36	MPa
Keuze voorspankabels	FeP1860	
Toelaatbare spanning	1200	MPa
Astreng	150	mm2
streng/kabel	19	
Akabel	2850	mm2
Benodigde voorspankracht	44921	kN
Nkabel; benodigd	14	
Nkabel; `toegepast Buiten	10	
Nkabel; `toegepast Binnen	6	
Ankerverdeling top		
Gegeven E6-19		
Randafstand ankers	230	mm
Minimale hoh-afstand ankers	300	mm
Anker circel buiten	1333	mm
Anker cirkel binnen	733	mm
Omtrek ankercirkel buiten	4189	mm
Omtrek ankercirkel binnen	2304	mm
Aantal plaatsbare ankers buitenring	13	
Aantal plaatsbare ankers binnenring	7	

Afschuiving in wapening door dwarskracht **(NEN-EN 1992-1-1 Hfst. 6.2.3)**

Max. dwarskracht in segment	498	kN
Max. dwarskracht / doorsnede	477	kN
Maximale optredende afschuiving in de wand	477	kN
Hoek loodrecht dwarskracht/drukdiagonaal	30	21,8≤Θ≤45
cot Θ	2	hoek
alfa	80	
cot alfa	0.18	
Asw	113	mm2
s	200	mm
z (horende max. dwarskracht)	1832	mm
fywd	478	Mpa
VRD,S	4656	kN
Toetsing afschuiving door dwarskracht	0.10	

Toetsing betonspanning	0.98	Voldoet
Toetsing afschuiving in wand	0.10	Voldoet

Afschuiving in wapening door torsie

Maximaal torsie	0	kNmm
Maximaal afschuiving torsie / doorsnede	0	kN
Maximaal dwarskracht bij torsie	0	kN
Max. afschuiving wand door dwarskracht	0	kN
Hoek loodrecht dwarskracht/drukdiagonaal	30	21,8≤Θ≤45
cot Θ	2	hoek
alfa	80	
cot alfa	0.18	
Asw	113	mm2
s	200	mm
z (dwarskracht)	1832	mm
z (torsie)	1100	mm
fywd	478	Mpa
VRD,max (dwarskracht)	4656	kN
VRD,max (torsie)	2794	kN
Toetsing afschuiving door dwarskracht	0.00	
Toetsing afschuiving door torsie	0.00	
Totaal	0.00	

W4S400 Bijlage E

Segment	**3**	
Lengte	**12**	**m**
Gewicht	**45.7**	**ton**

Betonklasse	A	Voldoet
Voorspananker	FeP1860	
Nkabel; `toegepast Buiten	9	Voldoet
Nkabel; `toegepast Binnen	2	
Dwarswapening	12	rond
Materiaal	550	Fb550
Aantal ringbeugels/meter hoogte	5	Voldoet

Keuze Betonklasse	A	B	C	D
	C55/67	C70/85	C80/95	C90/105
fck	55	70	80	90
yck	1.5	1.5	1.5	1.5
fcd	-36.7	-46.7	-53.3	-60.0
Trekspanning	0	0	0	0

Optredende spanningen

Segment	3		
Ingevulde wanddikte	400		
	Voet	Top	
Buitendiameter	1793	1490	mm
Buitenomtrek	5634	4681	mm
Wanddikte	400	400	mm
Binnendiameter	993	690	mm
Doorsnede	Hol	Hol	
Omtrek/dikte	14.09	11.70	Verhouding
Oppervlak	1750954	1369794	mm2
Weerstandsmoment	512942173	309849332	mm3
Maximale moment	8872	kNm	
Maximale moment + 2de orde	9759	kNm	
Maximaal dwarskracht	452	kN	
Maximaal torsiemoment	0	kNmm	
Maximaal normaalkracht	1282	kN	
Spanning tgv normaalkracht	0.7	N/mm2	
Spanning tgv moment	19.1	N/mm2	
2de orde effect verrekening	10%		
Factor e.g	1.2		
Maximale drukspanning	-19.8	Mpa	
Toelaatbare spanning	-36.7	Komende uit betonklasse	
Maximale trekspanning	18.5	MPa	
Toelaatbare trekspanning	0.0	MPa	

Voorspanning

Benodigde voorspanning ULS	18.5	Mpa
Benodigde voorspanning SLS	13	Mpa
Benodigde voorspankracht	32387	kN
Resulterende betonspanningen		
Trekzijde	0	Mpa
Drukzijde	-38	Mpa
Na relaxatie	-35	MPa
Keuze voorspankabels	FeP1860	
Toelaatbare spanning	1200	MPa
Astreng	150	mm2
streng/kabel	19	
Akabel	2850	mm2
Benodigde voorspankracht	32387	kN
Nkabel; benodigd	10	
Nkabel; `toegepast Buiten	9	
Nkabel; `toegepast Binnen	2	
Ankerverdeling top		
Gegeven E6-19		
Randafstand ankers	230	mm
Minimale hoh-afstand ankers	300	mm
Anker circel buiten	1030	mm
Anker cirkel binnen	430	mm
Omtrek ankercirkel buiten	3236	mm
Omtrek ankercirkel binnen	1351	mm
Aantal plaatsbare ankers buitenring	10	
Aantal plaatsbare ankers binnenring	4	

Afschuiving in wapening door dwarskracht **(NEN-EN 1992-1-1 Hfst. 6.2.3)**

Max. dwarskracht in segment	452	kN
Max. dwarskracht / doorsnede	434	kN
Maximale optredende afschuiving in de wand	434	kN
Hoek loodrecht dwarskracht/drukdiagonaal	30	21,8≤Θ≤45
cot Θ	2	hoek
alfa	80	
cot alfa	0.18	
Asw	113	mm2
s	200	mm
z (horende max. dwarskracht)	1576	mm
fywd	478	Mpa
VRD,S	4005	kN
Toetsing afschuiving door dwarskracht	0.11	

Toetsing betonspanning	0.94	Voldoet
Toetsing afschuiving in wand	0.11	Voldoet

Afschuiving in wapening door torsie

Maximaal torsie	0	kNmm
Maximaal afschuiving torsie / doorsnede	0	kN
Maximaal dwarskracht bij torsie	0	kN
Max. afschuiving wand door dwarskracht	0	kN
Hoek loodrecht dwarskracht/drukdiagonaal	30	21,8≤Θ≤45
cot Θ	2	hoek
alfa	80	
cot alfa	0.18	
Asw	113	mm2
s	200	mm
z (dwarskracht)	1576	mm
z (torsie)	1257	mm
fywd	478	Mpa
VRD,max (dwarskracht)	4005	kN
VRD,max (torsie)	3194	kN
Toetsing afschuiving door dwarskracht	0.00	
Toetsing afschuiving door torsie	0.00	
Totaal	0.00	

W4S400 Bijlage E

Segment	**4**	
Lengte	**12**	**m**
Gewicht	**28.6**	**ton**

Betonklasse	A	Voldoet
Voorspananker	FeP1860	
Nkabel; `toegepast Buiten	6	Voldoet
Nkabel; `toegepast Binnen	1	
Dwarswapening	12	rond
Materiaal	550	Fb550
Aantal ringbeugels/meter hoogte	5	Voldoet

Keuze Betonklasse	A	B	C	D
	C55/67	C70/85	C80/95	C90/105
fck	55	70	80	90
yck	1.5	1.5	1.5	1.5
fcd	-36.7	-46.7	-53.3	-60.0
Trekspanning	0	0	0	0
	0			
Optredende spanningen	0			

Segment	4		
Ingevulde wanddikte	300		
	Voet	Top	
Buitendiameter	1490	1187	mm
Buitenomtrek	4681	3728	mm
Wanddikte	300	300	mm
Binnendiameter	890	587	mm
Doorsnede	Hol	Hol	
Omtrek/dikte	15.60	12.43	Verhouding
Oppervlak	1121593	835723	mm2
Weerstandsmoment	283440330	154276002	mm3
Maximale moment	4018	kNm	
Maximale moment + 2de orde	4420	kNm	
Maximaal dwarskracht	316	kN	
Maximaal torsiemoment	0	kNmm	
Maximaal normaalkracht	693	kN	
Spanning tgv normaalkracht	0.6	N/mm2	
Spanning tgv moment	15.7	N/mm2	
2de orde effect verrekening	10%		
Factor e.g	1.2		
Maximale drukspanning	-16.3	Mpa	
Toelaatbare spanning	-36.7	Komende uit betonklasse	
Maximale trekspanning	15.2	MPa	
Toelaatbare trekspanning	0.0	MPa	

Voorspanning

Benodigde voorspanning ULS	15.2	Mpa
Benodigde voorspanning SLS	10	Mpa
Benodigde voorspankracht	17004	kN
Resulterende betonspanningen		
Trekzijde	0	Mpa
Drukzijde	-31	Mpa
Na relaxatie	-28	MPa
Keuze voorspankabels	FeP1860	
Toelaatbare spanning	1200	MPa
Astreng	150	mm2
streng/kabel	19	
Akabel	2850	mm2
Benodigde voorspankracht	17004	kN
Nkabel; benodigd	5	
Nkabel; `toegepast Buiten	6	
Nkabel; `toegepast Binnen	1	
Ankerverdeling top		
Gegeven E6-19		
Randafstand ankers	230	mm
Minimale hoh-afstand ankers	300	mm
Anker circel buiten	727	mm
Anker cirkel binnen	127	mm
Omtrek ankercirkel buiten	2283	mm
Omtrek ankercirkel binnen	398	mm
Aantal plaatsbare ankers buitenring	7	
Aantal plaatsbare ankers binnenring	1	

Afschuiving in wapening door dwarskracht **(NEN-EN 1992-1-1 Hfst. 6.2.3)**

Max. dwarskracht in segment	316	kN
Max. dwarskracht / doorsnede	304	kN
Maximale optredende afschuiving in de wand	304	kN
Hoek loodrecht dwarskracht/drukdiagonaal	30	21,8≤Θ≤45
cot Θ	2	hoek
alfa	80	
cot alfa	0.18	
Asw	113	mm2
s	200	mm
z (horende max. dwarskracht)	1320	mm
fywd	478	Mpa
VRD,S	3355	kN
Toetsing afschuiving door dwarskracht	0.09	

Toetsing betonspanning	0.77	Voldoet
Toetsing afschuiving in wand	0.09	Voldoet

Afschuiving in wapening door torsie

Maximaal torsie	0	kNmm
Maximaal afschuiving torsie / doorsned	0	kN
Maximaal dwarskracht bij torsie	0	kN
Max. afschuiving wand door dwarskrac	0	kN
Hoek loodrecht dwarskracht/drukdiago	30	21,8≤Θ≤45
cot Θ	2	hoek
alfa	80	
cot alfa	0.18	
Asw	113	mm2
s	200	mm
z (dwarskracht)	1320	mm
z (torsie)	1571	mm
fywd	478	Mpa
VRD,max (dwarskracht)	3355	kN
VRD,max (torsie)	3992	kN
Toetsing afschuiving door dwarskracht	0.00	
Toetsing afschuiving door torsie	0.00	
Totaal	0.00	

W4S400 Bijlage E

Segment	**5**	
Lengte	**12**	**m**
Gewicht	**16.9**	**ton**

Betonklasse	A	Voldoet
Voorspananker	FeP1860	
Nkabel; `toegepast Buiten	4	Voldoet
Nkabel; `toegepast Binnen	1	
Dwarswapening	12	rond
Materiaal	550	Fb550
Aantal ringbeugels/meter hoogte	5	Voldoet

Keuze Betonklasse	A	B	C	D
	C55/67	C70/85	C80/95	C90/105
fck	55	70	80	90
yck	1.5	1.5	1.5	1.5
fcd	-36.7	-46.7	-53.3	-60.0
Trekspanning	0	0	0	0

Optredende spanningen

Segment	5		
Ingevulde wanddikte	200		
	Voet	Top	
Buitendiameter	1187	883	mm
Buitenomtrek	3728	2775	mm
Wanddikte	200	200	mm
Binnendiameter	787	483	mm
Doorsnede	Hol	Hol	
Omtrek/dikte	18.64	13.88	Verhouding
Oppervlak	619981	429401	mm2
Weerstandsmoment	132387879	61615798	mm3
Maximale moment	1062	kNm	
Maximale moment + 2de orde	1168	kNm	
Maximaal dwarskracht	171	kN	
Maximaal torsiemoment	0	kNmm	
Maximaal normaalkracht	305	kN	
Spanning tgv normaalkracht	0.5	N/mm2	
Spanning tgv moment	8.9	N/mm2	
2de orde effect verrekening	10%		
Factor e.g	1.2		
Maximale drukspanning	-9.4	Mpa	
Toelaatbare spanning	-36.7	Komende uit betonklasse	
Maximale trekspanning	8.4	MPa	
Toelaatbare trekspanning	0.0	MPa	

Voorspanning

Benodigde voorspanning ULS	8.4	Mpa
Benodigde voorspanning SLS	6	Mpa
Benodigde voorspankracht	5257	kN
Resulterende betonspanningen		
Trekzijde	0	Mpa
Drukzijde	-18	Mpa
Na relaxatie	-15	MPa
Keuze voorspankabels	FeP1860	
Toelaatbare spanning	1200	MPa
Astreng	150	mm2
streng/kabel	19	
Akabel	2850	mm2
Benodigde voorspankracht	5257	kN
Nkabel; benodigd	2	
Nkabel; `toegepast Buiten	4	
Nkabel; `toegepast Binnen	1	
Ankerverdeling top		
Gegeven E6-19		
Randafstand ankers	230	mm
Minimale hoh-afstand ankers	300	mm
Anker circel buiten	423	mm
Anker cirkel binnen	-177	mm
Omtrek ankercirkel buiten	1330	mm
Omtrek ankercirkel binnen	-555	mm
Aantal plaatsbare ankers buitenring	4	
Aantal plaatsbare ankers binnenring	-1	

Afschuiving in wapening door dwarskracht **(NEN-EN 1992-1-1 Hfst. 6.2.3)**

Max. dwarskracht in segment		171	kN
Max. dwarskracht / doorsnede		162	kN
Maximale optredende afschuiving in de wand		162	kN
Hoek loodrecht dwarskracht/drukdiagonaal		30	21,8≤Θ≤45
cot Θ		2	hoek
alfa		80	
cot alfa		0.18	
Asw		113	mm2
s		200	mm
z (horende max. dwarskracht)		1048	mm
fywd		478	Mpa
VRD,S		2663	kN
Toetsing afschuiving door dwarskracht		0.06	0
	0	0	0

Toetsing betonspanning	0.42	Voldoet
Toetsing afschuiving in wand	0.06	Voldoet

Afschuiving in wapening door torsie

Maximaal torsie	0	kNmm
Maximaal afschuiving torsie / doorsned	0	kN
Maximaal dwarskracht bij torsie	0	kN
Max. afschuiving wand door dwarskra	0	kN
Hoek loodrecht dwarskracht/drukdiago	30	21,8≤Θ≤45
cot Θ	2	hoek
alfa	80	
cot alfa	0.18	
Asw	113	mm2
s	200	mm
z (dwarskracht)	1048	mm
z (torsie)	1885	mm
fywd	478	Mpa
VRD,max (dwarskracht)	2663	kN
VRD,max (torsie)	4790	kN
Toetsing afschuiving door dwarskracht	0.00	
Toetsing afschuiving door torsie	0.00	
Totaal	0.00	

W4S400 Bijlage E

Segment	**6**	
Lengte	**3.3**	**m**
Gewicht	**4.3**	**ton**

Betonklasse	A	Voldoet
Voorspananker	FeP1860	
Nkabel; `toegepast Buiten	3	Voldoet
Nkabel; `toegepast Binnen	0	
Dwarswapening	12	rond
Materiaal	550	Fb550
Aantal ringbeugels/meter hoogte	5	Voldoet

Keuze Betonklasse	A	B	C	D
	C55/67	C70/85	C80/95	C90/105
fck	55	70	80	90
yck	1.5	1.5	1.5	1.5
fcd	-36.7	-46.7	-53.3	-60.0
Trekspanning	0	0	0	0

Optredende spanningen

Segment	6		
Ingevulde wanddikte	150		
	Voet	Top	
Buitendiameter	883	800	mm
Buitenomtrek	2775	2513	mm
Wanddikte	150	150	mm
Binnendiameter	583	500	mm
Doorsnede	Hol	Hol	
Omtrek/dikte	18.50	16.76	Verhouding
Oppervlak	345612	306305	mm2
Weerstandsmoment	54809909	42595579	mm3
Maximale moment	47	kNm	
Maximale moment + 2de orde	51	kNm	
Maximaal dwarskracht	20	kN	
Maximaal torsiemoment	0	kNmm	
Maximaal normaalkracht	55	kN	
Spanning tgv normaalkracht	0.1	N/mm2	
Spanning tgv moment	15.7	N/mm2	
2de orde effect verrekening	10%		
Factor e.g	1.2		
Maximale drukspanning	-15.7	Mpa	
Toelaatbare spanning	-36.7	Komende uit betonklasse	
Maximale trekspanning	15.6	MPa	
Toelaatbare trekspanning	0.0	MPa	

Voorspanning

Benodigde voorspanning ULS	15.6	Mpa
Benodigde voorspanning SLS	11	Mpa
Benodigde voorspankracht	425	kN
Resulterende betonspanningen		
Trekzijde	0	Mpa
Drukzijde	-31	Mpa
Na relaxatie	-27	MPa
Keuze voorspankabels	FeP1860	
Toelaatbare spanning	1200	MPa
Astreng	150	mm2
streng/kabel	19	
Akabel	2850	mm2
Benodigde voorspankracht	425	kN
Nkabel; benodigd	1	
Nkabel; `toegepast Buiten	3	
Nkabel; `toegepast Binnen	0	
Ankerverdeling top		
Gegeven E6-19		
Randafstand ankers	230	mm
Minimale hoh-afstand ankers	300	mm
Anker circel buiten	340	mm
Anker cirkel binnen	-260	mm
Omtrek ankercirkel buiten	1068	mm
Omtrek ankercirkel binnen	-817	mm
Aantal plaatsbare ankers buitenring	3	
Aantal plaatsbare ankers binnenring	-2	

Afschuiving in wapening door dwarskracht **(NEN-EN 1992-1-1 Hfst. 6.2.3)**

Max. dwarskracht in segment	20	kN
Max. dwarskracht / doorsnede	20	kN
Maximale optredende afschuiving in de wand	20	kN
Hoek loodrecht dwarskracht/drukdiagonaal	30	21,8≤Θ≤45
cot Θ	2	hoek
alfa	80	
cot alfa	0.18	
Asw	113	mm2
s	200	mm
z (horende max. dwarskracht)	872	mm
fywd	478	Mpa
VRD,S	2216	kN
Toetsing afschuiving door dwarskracht	0.01	

Toetsing betonspanning	0.75	Voldoet
Toetsing afschuiving in wand	0.01	Voldoet

Afschuiving in wapening door torsie

Maximaal torsie	0	kNmm
Maximaal afschuiving torsie / doorsnec	0	kN
Maximaal dwarskracht bij torsie	0	kN
Max. afschuiving wand door dwarskra	0	kN
Hoek loodrecht dwarskracht/drukdiago	30	21,8≤Θ≤45
cot Θ	2	hoek
alfa	80	
cot alfa	0.18	
Asw	113	mm2
s	200	mm
z (dwarskracht)	872	mm
z (torsie)	2042	mm
fywd	478	Mpa
VRD,max (dwarskracht)	2216	kN
VRD,max (torsie)	5190	kN
Toetsing afschuiving door dwarskracht	0.00	
Toetsing afschuiving door torsie	0.00	
Totaal	0.00	

W4S450 Bijlage G

Segment	**1**	
Lengte	**12**	**m**
Gewicht	**99.0**	**ton**

Betonklasse	A	Voldoet
Voorspananker	FeP1860	
Nkabel; `toegepast Buiten	12	Voldoet
Nkabel; `toegepast Binnen	8	
Dwarswapening	12	rond
Materiaal	550	Fb550
Aantal ringbeugels/meter hoogte	5	Voldoet

Keuze Betonklasse	A	B	C	D
	C55/67	C70/85	C80/95	C90/105
fck	55	70	80	90
yck	1.5	1.5	1.5	1.5
fcd	-36.7	-46.7	-53.3	-60.0
Trekspanning	0	0	0	0

Optredende spanningen

Segment	1		
Ingevulde wanddikte	500		
	Voet	Top	
Buitendiameter	2800	2463	mm
Buitenomtrek	8796	7737	mm
Wanddikte	500	500	mm
Binnendiameter	1800	1463	mm
Doorsnede	Hol	Hol	
Omtrek/dikte	17.59	15.47	Verhouding
Oppervlak	3612832	3083350	mm2
Weerstandsmoment	1787061321	1284162939	mm3
Maximale moment	26979	kNm	
Maximale moment + 2de orde	29677	kNm	
Maximaal dwarskracht	606	kN	
Maximaal torsiemoment	0	kNmm	
Maximaal normaalkracht	3769	kN	
Spanning tgv normaalkracht	1.0	N/mm2	
Spanning tgv moment	17.0	N/mm2	
2de orde effect verrekening	10%		
Factor e.g	1.2		
Maximale drukspanning	-18.1	Mpa	
Toelaatbare spanning	-36.7	Komende uit betonklasse	
Maximale trekspanning	16.3	MPa	
Toelaatbare trekspanning	0.0	MPa	

Voorspanning

Benodigde voorspanning ULS	16.3	Mpa
Benodigde voorspanning SLS	11	Mpa
Benodigde voorspankracht	57171	kN
Resulterende betonspanningen		
Trekzijde	0	Mpa
Drukzijde	-34	Mpa
Na relaxatie	-32	MPa
Keuze voorspankabels	FeP1860	
Toelaatbare spanning	1200	MPa
Astreng	150	mm2
streng/kabel	19	
Akabel	2850	mm2
Benodigde voorspankracht	57171	kN
Nkabel; benodigd	17	
Nkabel; `toegepast Buiten	12	
Nkabel; `toegepast Binnen	8	
Ankerverdeling top		
Gegeven E6-19		
Randafstand ankers	230	mm
Minimale hoh-afstand ankers	300	mm
Anker circel buiten	2003	mm
Anker cirkel binnen	1403	mm
Omtrek ankercirkel buiten	6292	mm
Omtrek ankercirkel binnen	4407	mm
Aantal plaatsbare ankers buitenring	20	
Aantal plaatsbare ankers binnenring	14	

Afschuiving in wapening door dwarskracht **(NEN-EN 1992-1-1 Hfst. 6.2.3)**

Max. dwarskracht in segment	606	kN
Max. dwarskracht / doorsnede	578	kN
Maximale optredende afschuiving in de wand	578	kN
Hoek loodrecht dwarskracht/drukdiagonaal	30	21,8≤Θ≤45
cot Θ	2	hoek
alfa	80	
cot alfa	0.18	
Asw	113	mm2
s	200	mm
z (horende max. dwarskracht)	2470	mm
fywd	478	Mpa
VRD,S	6277	kN
Toetsing afschuiving door dwarskracht	0.09	

Toetsing betonspanning	0.86	Voldoet
Toetsing afschuiving in wand	0.09	Voldoet

Afschuiving in wapening door torsie

Maximaal torsie	0	kNmm
Maximaal afschuiving torsie / doorsnede	0	kN
Maximaal dwarskracht bij torsie	0	kN
Max. afschuiving wand door dwarskracht	0	kN
Hoek loodrecht dwarskracht/drukdiagonaal	30	21,8≤Θ≤45
cot Θ	2	hoek
alfa	80	
cot alfa	0.18	
Asw	113	mm2
s	200	mm
z (dwarskracht)	2470	mm
z (torsie)	942	mm
fywd	478	Mpa
VRD,max (dwarskracht)	6277	kN
VRD,max (torsie)	2395	kN
Toetsing afschuiving door dwarskracht	0.00	
Toetsing afschuiving door torsie	0.00	
Totaal	0.00	

W4S450 Bijlage G

Segment	**2**	
Lengte	**12**	**m**
Gewicht	**77.0**	**ton**

Betonklasse	A	Voldoet
Voorspananker	FeP1860	
Nkabel; `toegepast Buiten	10	Voldoet
Nkabel; `toegepast Binnen	6	
Dwarswapening	12	rond
Materiaal	550	Fb550
Aantal ringbeugels/meter hoogte	5	Voldoet

Keuze Betonklasse	A	B	C	D
	C55/67	C70/85	C80/95	C90/105
fck	55	70	80	90
yck	1.5	1.5	1.5	1.5
fcd	-36.7	-46.7	-53.3	-60.0
Trekspanning	0	0	0	0

Optredende spanningen

Segment	2		
Ingevulde wanddikte	450		
	Voet	Top	
Buitendiameter	2463	2126	mm
Buitenomtrek	7737	6679	mm
Wanddikte	450	450	mm
Binnendiameter	1563	1226	mm
Doorsnede	Hol	Hol	
Omtrek/dikte	17.19	14.84	Verhouding
Oppervlak	2845701	2369167	mm2
Weerstandsmoment	1228887464	838895536	mm3
Maximale moment	19840	kNm	
Maximale moment + 2de orde	21824	kNm	
Maximaal dwarskracht	576	kN	
Maximaal torsiemoment	0	kNmm	
Maximaal normaalkracht	2603	kN	
Spanning tgv normaalkracht	0.9	N/mm2	
Spanning tgv moment	17.8	N/mm2	
2de orde effect verrekening	10%		
Factor e.g	1.2		
Maximale drukspanning	-18.7	Mpa	
Toelaatbare spanning	-36.7	Komende uit betonklasse	
Maximale trekspanning	17.1	MPa	
Toelaatbare trekspanning	0.0	MPa	

Voorspanning

Benodigde voorspanning ULS	17.1	Mpa
Benodigde voorspanning SLS	12	Mpa
Benodigde voorspankracht	48664	kN
Resulterende betonspanningen		
Trekzijde	0	Mpa
Drukzijde	-36	Mpa
Na relaxatie	-33	MPa
Keuze voorspankabels	FeP1860	
Toelaatbare spanning	1200	MPa
Astreng	150	mm2
streng/kabel	19	
Akabel	2850	mm2
Benodigde voorspankracht	48664	kN
Nkabel; benodigd	15	
Nkabel; `toegepast Buiten	10	
Nkabel; `toegepast Binnen	6	
Ankerverdeling top		
Gegeven E6-19		
Randafstand ankers	230	mm
Minimale hoh-afstand ankers	300	mm
Anker circel buiten	1666	mm
Anker cirkel binnen	1066	mm
Omtrek ankercirkel buiten	5233	mm
Omtrek ankercirkel binnen	3348	mm
Aantal plaatsbare ankers buitenring	17	
Aantal plaatsbare ankers binnenring	11	

Afschuiving in wapening door dwarskracht **(NEN-EN 1992-1-1 Hfst. 6.2.3)**

Max. dwarskracht in segment	576	kN
Max. dwarskracht / doorsnede	548	kN
Maximale optredende afschuiving in de wand	548	kN
Hoek loodrecht dwarskracht/drukdiagonaal	30	21,8≤Θ≤45
cot Θ	2	hoek
alfa	80	
cot alfa	0.18	
Asw	113	mm2
s	200	mm
z (horende max. dwarskracht)	2130	mm
fywd	478	Mpa
VRD,S	5413	kN
Toetsing afschuiving door dwarskracht	0.10	

Toetsing betonspanning	0.89	Voldoet
Toetsing afschuiving in wand	0.10	Voldoet

Afschuiving in wapening door torsie

Maximaal torsie	0	kNmm
Maximaal afschuiving torsie / doorsnede	0	kN
Maximaal dwarskracht bij torsie	0	kN
Max. afschuiving wand door dwarskracht	0	kN
Hoek loodrecht dwarskracht/drukdiagonaal	30	21,8≤Θ≤45
cot Θ	2	hoek
alfa	80	
cot alfa	0.18	
Asw	113	mm2
s	200	mm
z (dwarskracht)	2130	mm
z (torsie)	1100	mm
fywd	478	Mpa
VRD,max (dwarskracht)	5413	kN
VRD,max (torsie)	2794	kN
Toetsing afschuiving door dwarskracht	0.00	
Toetsing afschuiving door torsie	0.00	
Totaal	0.00	

W4S450 Bijlage G

Segment	**3**	
Lengte	**12**	**m**
Gewicht	**57.5**	**ton**

Betonklasse	A	Voldoet
Voorspananker	FeP1860	
Nkabel; `toegepast Buiten	10	Voldoet
Nkabel; `toegepast Binnen	4	
Dwarswapening	12	rond
Materiaal	550	Fb550
Aantal ringbeugels/meter hoogte	5	Voldoet

Keuze Betonklasse	A	B	C	D
	C55/67	C70/85	C80/95	C90/105
fck	55	70	80	90
yck	1.5	1.5	1.5	1.5
fcd	-36.7	-46.7	-53.3	-60.0
Trekspanning	0	0	0	0

Optredende spanningen

Segment	3		
Ingevulde wanddikte	400		
	Voet	Top	
Buitendiameter	2126	1789	mm
Buitenomtrek	6679	5620	mm
Wanddikte	400	400	mm
Binnendiameter	1326	989	mm
Doorsnede	Hol	Hol	
Omtrek/dikte	16.70	14.05	Verhouding
Oppervlak	2168758	1745172	mm2
Weerstandsmoment	800472944	509441345	mm3
Maximale moment	13054	kNm	
Maximale moment + 2de orde	14359	kNm	
Maximaal dwarskracht	546	kN	
Maximaal torsiemoment	0	kNmm	
Maximaal normaalkracht	1697	kN	
Spanning tgv normaalkracht	0.8	N/mm2	
Spanning tgv moment	18.1	N/mm2	
2de orde effect verrekening	10%		
Factor e.g	1.2		
Maximale drukspanning	-18.9	Mpa	
Toelaatbare spanning	-36.7	Komende uit betonklasse	
Maximale trekspanning	17.5	MPa	
Toelaatbare trekspanning	0.0	MPa	

Voorspanning

Benodigde voorspanning ULS	17.5	Mpa
Benodigde voorspanning SLS	12	Mpa
Benodigde voorspankracht	37775	kN
Resulterende betonspanningen		
Trekzijde	0	Mpa
Drukzijde	-36	Mpa
Na relaxatie	-33	MPa
Keuze voorspankabels	FeP1860	
Toelaatbare spanning	1200	MPa
Astreng	150	mm2
streng/kabel	19	
Akabel	2850	mm2
Benodigde voorspankracht	37775	kN
Nkabel; benodigd	12	
Nkabel; `toegepast Buiten	10	
Nkabel; `toegepast Binnen	4	
Ankerverdeling top		
Gegeven E6-19		
Randafstand ankers	230	mm
Minimale hoh-afstand ankers	300	mm
Anker circel buiten	1329	mm
Anker cirkel binnen	729	mm
Omtrek ankercirkel buiten	4174	mm
Omtrek ankercirkel binnen	2289	mm
Aantal plaatsbare ankers buitenring	13	
Aantal plaatsbare ankers binnenring	7	

Afschuiving in wapening door dwarskracht **(NEN-EN 1992-1-1 Hfst. 6.2.3)**

Max. dwarskracht in segment	546	kN
Max. dwarskracht / doorsnede	495	kN
Maximale optredende afschuiving in de wand	495	kN
Hoek loodrecht dwarskracht/drukdiagonaal	30	21,8≤Θ≤45
cot Θ	2	hoek
alfa	80	
cot alfa	0.18	
Asw	113	mm2
s	200	mm
z (horende max. dwarskracht)	1790	mm
fywd	478	Mpa
VRD,S	4549	kN
Toetsing afschuiving door dwarskracht	0.11	

Toetsing betonspanning	0.89	Voldoet
Toetsing afschuiving in wand	0.11	Voldoet

Afschuiving in wapening door torsie

Maximaal torsie	0	kNmm
Maximaal afschuiving torsie / doorsnede	0	kN
Maximaal dwarskracht bij torsie	0	kN
Max. afschuiving wand door dwarskracht	0	kN
Hoek loodrecht dwarskracht/drukdiagonaal	30	21,8≤Θ≤45
cot Θ	2	hoek
alfa	80	
cot alfa	0.18	
Asw	113	mm2
s	200	mm
z (dwarskracht)	1790	mm
z (torsie)	1257	mm
fywd	478	Mpa
VRD,max (dwarskracht)	4549	kN
VRD,max (torsie)	3194	kN
Toetsing afschuiving door dwarskracht	0.00	
Toetsing afschuiving door torsie	0.00	
Totaal	0.00	

W4S450 Bijlage G

Segment	**4**	
Lengte	**12**	**m**
Gewicht	**36.4**	**ton**

Betonklasse	A	Voldoet
Voorspananker	FeP1860	
Nkabel; `toegepast Buiten	8	Voldoet
Nkabel; `toegepast Binnen	2	
Dwarswapening	12	rond
Materiaal	550	Fb550
Aantal ringbeugels/meter hoogte	5	Voldoet

Keuze Betonklasse	A	B	C	D
	C55/67	C70/85	C80/95	C90/105
fck	55	70	80	90
yck	1.5	1.5	1.5	1.5
fcd	-36.7	-46.7	-53.3	-60.0
Trekspanning	0	0	0	0
	0			
	0			

Optredende spanningen

Segment	4		
Ingevulde wanddikte	300		
	Voet	Top	
Buitendiameter	1789	1452	mm
Buitenomtrek	5620	4561	mm
Wanddikte	300	300	mm
Binnendiameter	1189	852	mm
Doorsnede	Hol	Hol	
Omtrek/dikte	18.73	15.20	Verhouding
Oppervlak	1403127	1085438	mm2
Weerstandsmoment	452295265	264759799	mm3
Maximale moment	6882	kNm	
Maximale moment + 2de orde	7570	kNm	
Maximaal dwarskracht	493	kN	
Maximaal torsiemoment	0	kNmm	
Maximaal normaalkracht	1010	kN	
Spanning tgv normaalkracht	0.7	N/mm2	
Spanning tgv moment	16.9	N/mm2	
2de orde effect verrekening	10%		
Factor e.g	1.2		
Maximale drukspanning	-17.7	Mpa	
Toelaatbare spanning	-36.7	Komende uit betonklasse	
Maximale trekspanning	16.4	MPa	
Toelaatbare trekspanning	0.0	MPa	

Voorspanning

Benodigde voorspanning ULS	16.4	Mpa
Benodigde voorspanning SLS	11	Mpa
Benodigde voorspankracht	22877	kN
Resulterende betonspanningen		
Trekzijde	0	Mpa
Drukzijde	-34	Mpa
Na relaxatie	-30	MPa
Keuze voorspankabels	FeP1860	
Toelaatbare spanning	1200	MPa
Astreng	150	mm2
streng/kabel	19	
Akabel	2850	mm2
Benodigde voorspankracht	22877	kN
Nkabel; benodigd	7	
Nkabel; `toegepast Buiten	8	
Nkabel; `toegepast Binnen	2	

Ankerverdeling top

Gegeven E6-19		
Randafstand ankers	230	mm
Minimale hoh-afstand ankers	300	mm
Anker circel buiten	992	mm
Anker cirkel binnen	392	mm
Omtrek ankercirkel buiten	3115	mm
Omtrek ankercirkel binnen	1231	mm
Aantal plaatsbare ankers buitenring	10	
Aantal plaatsbare ankers binnenring	4	

Afschuiving in wapening door dwarskracht **(NEN-EN 1992-1-1 Hfst. 6.2.3)**

Max. dwarskracht in segment	493	kN
Max. dwarskracht / doorsnede	491	kN
Maximale optredende afschuiving in de wand	491	kN
Hoek loodrecht dwarskracht/drukdiagonaal	30	21,8≤Θ≤45
cot Θ	2	hoek
alfa	80	
cot alfa	0.18	
Asw	113	mm2
s	200	mm
z (horende max. dwarskracht)	1750	mm
fywd	478	Mpa
VRD,S	4447	kN
Toetsing afschuiving door dwarskracht	0.11	

Toetsing betonspanning	0.83	Voldoet
Toetsing afschuiving in wand	0.11	Voldoet

Afschuiving in wapening door torsie

Maximaal torsie	0	kNmm
Maximaal afschuiving torsie / doorsned	0	kN
Maximaal dwarskracht bij torsie	0	kN
Max. afschuiving wand door dwarskrac	0	kN
Hoek loodrecht dwarskracht/drukdiago	30	21,8≤Θ≤45
cot Θ	2	hoek
alfa	80	
cot alfa	0.18	
Asw	113	mm2
s	200	mm
z (dwarskracht)	1750	mm
z (torsie)	1571	mm
fywd	478	Mpa
VRD,max (dwarskracht)	4447	kN
VRD,max (torsie)	3992	kN
Toetsing afschuiving door dwarskracht	0.00	
Toetsing afschuiving door torsie	0.00	
Totaal	0.00	

W4S450 Bijlage G

Segment	**5**	
Lengte	**12**	**m**
Gewicht	**19.8**	**ton**

Betonklasse	A	Voldoet
Voorspananker	FeP1860	
Nkabel; `toegepast Buiten	4	Voldoet
Nkabel; `toegepast Binnen	1	
Dwarswapening	12	rond
Materiaal	550	Fb550
Aantal ringbeugels/meter hoogte	5	Voldoet

Keuze Betonklasse	A	B	C	D
	C55/67	C70/85	C80/95	C90/105
fck	55	70	80	90
yck	1.5	1.5	1.5	1.5
fcd	-36.7	-46.7	-53.3	-60.0
Trekspanning	0	0	0	0

Optredende spanningen

Segment	5		
Ingevulde wanddikte	200		
	Voet	Top	
Buitendiameter	1452	1115	mm
Buitenomtrek	4561	3502	mm
Wanddikte	200	200	mm
Binnendiameter	1052	715	mm
Doorsnede	Hol	Hol	
Omtrek/dikte	22.80	17.51	Verhouding
Oppervlak	786457	574664	mm2
Weerstandsmoment	217611459	112976275	mm3
Maximale moment	2498	kNm	
Maximale moment + 2de orde	2748	kNm	
Maximaal dwarskracht	342	kN	
Maximaal torsiemoment	0	kNmm	
Maximaal normaalkracht	525	kN	
Spanning tgv normaalkracht	0.7	N/mm2	
Spanning tgv moment	12.9	N/mm2	
2de orde effect verrekening	10%		
Factor e.g	1.2		
Maximale drukspanning	-13.6	Mpa	
Toelaatbare spanning	-36.7	Komende uit betonklasse	
Maximale trekspanning	12.2	MPa	
Toelaatbare trekspanning	0.0	MPa	

Voorspanning

Benodigde voorspanning ULS	12.2	Mpa
Benodigde voorspanning SLS	8	Mpa
Benodigde voorspankracht	9639	kN
Resulterende betonspanningen		
Trekzijde	0	Mpa
Drukzijde	-26	Mpa
Na relaxatie	-23	MPa
Keuze voorspankabels	FeP1860	
Toelaatbare spanning	1200	MPa
Astreng	150	mm2
streng/kabel	19	
Akabel	2850	mm2
Benodigde voorspankracht	9639	kN
Nkabel; benodigd	3	
Nkabel; `toegepast Buiten	4	
Nkabel; `toegepast Binnen	1	
Ankerverdeling top		
Gegeven E6-19		
Randafstand ankers	230	mm
Minimale hoh-afstand ankers	300	mm
Anker circel buiten	655	mm
Anker cirkel binnen	55	mm
Omtrek ankercirkel buiten	2057	mm
Omtrek ankercirkel binnen	172	mm
Aantal plaatsbare ankers buitenring	6	
Aantal plaatsbare ankers binnenring	0	

Afschuiving in wapening door dwarskracht **(NEN-EN 1992-1-1 Hfst. 6.2.3)**

Max. dwarskracht in segment		342	kN
Max. dwarskracht / doorsnede		342	kN
Maximale optredende afschuiving in de wand		342	kN
Hoek loodrecht dwarskracht/drukdiagonaal		30	21,8≤Θ≤45
cot Θ		2	hoek
alfa		80	
cot alfa		0.18	
Asw		113	mm2
s		200	mm
z (horende max. dwarskracht)		1430	mm
fywd		478	Mpa
VRD,S		3634	kN
Toetsing afschuiving door dwarskracht		0.09	0
	0	0	0

Toetsing betonspanning	0.63	Voldoet
Toetsing afschuiving in wand	0.09	Voldoet

Afschuiving in wapening door torsie

Maximaal torsie	0	kNmm
Maximaal afschuiving torsie / doorsned	0	kN
Maximaal dwarskracht bij torsie	0	kN
Max. afschuiving wand door dwarskra	0	kN
Hoek loodrecht dwarskracht/drukdiago	30	21,8≤Θ≤45
cot Θ	2	hoek
alfa	80	
cot alfa	0.18	
Asw	113	mm2
s	200	mm
z (dwarskracht)	1430	mm
z (torsie)	1885	mm
fywd	478	Mpa
VRD,max (dwarskracht)	3634	kN
VRD,max (torsie)	4790	kN
Toetsing afschuiving door dwarskracht	0.00	
Toetsing afschuiving door torsie	0.00	
Totaal	0.00	

W4S450 Bijlage G

Segment	**6**	
Lengte	**11.2**	**m**
Gewicht	**14.5**	**ton**

Betonklasse	A	Voldoet
Voorspananker	FeP1860	
Nkabel; `toegepast Buiten	3	Voldoet
Nkabel; `toegepast Binnen	0	
Dwarswapening	12	rond
Materiaal	550	Fb550
Aantal ringbeugels/meter hoogte	5	Voldoet

Keuze Betonklasse	A	B	C	D
	C55/67	C70/85	C80/95	C90/105
fck	55	70	80	90
yck	1.5	1.5	1.5	1.5
fcd	-36.7	-46.7	-53.3	-60.0
Trekspanning	0	0	0	0

Optredende spanningen

Segment	6		
Ingevulde wanddikte	150		
	Voet	Top	
Buitendiameter	1115	800	mm
Buitenomtrek	3502	2513	mm
Wanddikte	150	150	mm
Binnendiameter	815	500	mm
Doorsnede	Hol	Hol	
Omtrek/dikte	23.34	16.76	Verhouding
Oppervlak	454560	306305	mm2
Weerstandsmoment	97159943	42595579	mm3
Maximale moment	272	kNm	
Maximale moment + 2de orde	299	kNm	
Maximaal dwarskracht	35	kN	
Maximaal torsiemoment	0	kNmm	
Maximaal normaalkracht	176	kN	
Spanning tgv normaalkracht	0.4	N/mm2	
Spanning tgv moment	16.9	N/mm2	
2de orde effect verrekening	10%		
Factor e.g	1.2		
Maximale drukspanning	-17.3	Mpa	
Toelaatbare spanning	-36.7	Komende uit betonklasse	
Maximale trekspanning	16.6	MPa	
Toelaatbare trekspanning	0.0	MPa	

Voorspanning

Benodigde voorspanning ULS	16.6	Mpa
Benodigde voorspanning SLS	11	Mpa
Benodigde voorspankracht	1290	kN
Resulterende betonspanningen		
Trekzijde	0	Mpa
Drukzijde	-34	Mpa
Na relaxatie	-30	MPa
Keuze voorspankabels	FeP1860	
Toelaatbare spanning	1200	MPa
Astreng	150	mm2
streng/kabel	19	
Akabel	2850	mm2
Benodigde voorspankracht	1290	kN
Nkabel; benodigd	1	
Nkabel; `toegepast Buiten	3	
Nkabel; `toegepast Binnen	0	
Ankerverdeling top		
Gegeven E6-19		
Randafstand ankers	230	mm
Minimale hoh-afstand ankers	300	mm
Anker circel buiten	340	mm
Anker cirkel binnen	-260	mm
Omtrek ankercirkel buiten	1068	mm
Omtrek ankercirkel binnen	-817	mm
Aantal plaatsbare ankers buitenring	3	
Aantal plaatsbare ankers binnenring	-2	

Afschuiving in wapening door dwarskracht **(NEN-EN 1992-1-1 Hfst. 6.2.3)**

Max. dwarskracht in segment	35	kN
Max. dwarskracht / doorsnede	35	kN
Maximale optredende afschuiving in de wand	35	kN
Hoek loodrecht dwarskracht/drukdiagonaal	30	21,8≤Θ≤45
cot Θ	2	hoek
alfa	80	
cot alfa	0.18	
Asw	113	mm2
s	200	mm
z (horende max. dwarskracht)	1090	mm
fywd	478	Mpa
VRD,S	2770	kN
Toetsing afschuiving door dwarskracht	0.01	

Toetsing betonspanning	0.83	Voldoet
Toetsing afschuiving in wand	0.01	Voldoet

Afschuiving in wapening door torsie

Maximaal torsie	0	kNmm
Maximaal afschuiving torsie / doorsnec	0	kN
Maximaal dwarskracht bij torsie	0	kN
Max. afschuiving wand door dwarskra	0	kN
Hoek loodrecht dwarskracht/drukdiago	30	21,8≤Θ≤45
cot Θ	2	hoek
alfa	80	
cot alfa	0.18	
Asw	113	mm2
s	200	mm
z (dwarskracht)	1090	mm
z (torsie)	2042	mm
fywd	478	Mpa
VRD,max (dwarskracht)	2770	kN
VRD,max (torsie)	5190	kN
Toetsing afschuiving door dwarskracht	0.00	
Toetsing afschuiving door torsie	0.00	
Totaal	0.00	

W6HL400 Bijlage J

Segment	**1**	
Lengte	**12**	**m**
Gewicht	**130.0**	**ton**

Betonklasse	B	Voldoet
Voorspananker	FeP1860	
Nkabel; `toegepast Buiten	25	Voldoet
Nkabel; `toegepast Binnen	8	
Dwarswapening	12	rond
Materiaal	550	Fb550
Aantal ringbeugels/meter hoogte	5	Voldoet

Keuze Betonklasse	A	B	C	D
	C55/67	C70/85	C80/95	C90/105
fck	55	70	80	90
yck	1.5	1.5	1.5	1.5
fcd	-36.7	-46.7	-53.3	-60.0
Trekspanning	0	0	0	0

Optredende spanningen

Segment	1		
Ingevulde wanddikte	500		
	Voet	Top	
Buitendiameter	3500	2954	mm
Buitenomtrek	10996	9279	mm
Wanddikte	500	500	mm
Binnendiameter	2500	1954	mm
Doorsnede	Hol	Hol	
Omtrek/dikte	21.99	18.56	Verhouding
Oppervlak	4712389	3854146	mm2
Weerstandsmoment	3113542719	2045500477	mm3
Maximale moment	64856	kNm	
Maximale moment + 2de orde	71341	kNm	
Maximaal dwarskracht	1676	kN	
Maximaal torsiemoment	3993683	kNmm	
Maximaal normaalkracht	4325	kN	
Spanning tgv normaalkracht	0.9	N/mm2	
Spanning tgv moment	24.1	N/mm2	
2de orde effect verrekening	10%		
Factor e.g	1.2		
Maximale drukspanning	-25.0	Mpa	
Toelaatbare spanning	-46.7	Komende uit betonklasse	
Maximale trekspanning	23.4	MPa	
Toelaatbare trekspanning	0.0	MPa	

Voorspanning

Benodigde voorspanning ULS	23.4	Mpa
Benodigde voorspanning SLS	24	Mpa
Benodigde voorspankracht	104732	kN
Resulterende betonspanningen		
Trekzijde	0	Mpa
Drukzijde	-48	Mpa
Na relaxatie	-44	MPa
Keuze voorspankabels	FeP1860	
Toelaatbare spanning	1200	MPa
Astreng	150	mm2
streng/kabel	19	
Akabel	2850	mm2
Benodigde voorspankracht	104732	kN
Nkabel; benodigd	31	
Nkabel; `toegepast Buiten	25	
Nkabel; `toegepast Binnen	8	
Ankerverdeling top		
Gegeven E6-19		
Randafstand ankers	230	mm
Minimale hoh-afstand ankers	300	mm
Anker circel buiten	2494	mm
Anker cirkel binnen	1894	mm
Omtrek ankercirkel buiten	7834	mm
Omtrek ankercirkel binnen	5949	mm
Aantal plaatsbare ankers buitenring	26	
Aantal plaatsbare ankers binnenring	19	

Afschuiving in wapening door dwarskracht **(NEN-EN 1992-1-1 Hfst. 6.2.3)**

Max. dwarskracht in segment	1676	kN
Max. dwarskracht / doorsnede	1665	kN
Maximale optredende afschuiving in de wand	1665	kN
Hoek loodrecht dwarskracht/drukdiagonaal	30	21,8≤Θ≤45
cot Θ	2	hoek
alfa	80	
cot alfa	0.18	
Asw	113	mm2
s	200	mm
z (horende max. dwarskracht)	2947	mm
fywd	478	Mpa
VRD,S	7488	kN
Toetsing afschuiving door dwarskracht	0.22	

Toetsing betonspanning	0.94	Voldoet
Toetsing afschuiving in wand	0.27	Voldoet

Afschuiving in wapening door torsie

Maximaal torsie	3993683	kNmm
Maximaal afschuiving torsie / doorsnede	3265	kN
Maximaal dwarskracht bij torsie	754	kN
Max. afschuiving wand door dwarskracht	754	kN
Hoek loodrecht dwarskracht/drukdiagonaal	30	21,8≤Θ≤45
cot Θ	2	hoek
alfa	80	
cot alfa	0.18	
Asw	113	mm2
s	200	mm
z (dwarskracht)	2947	mm
z (torsie)	7686	mm
fywd	478	Mpa
VRD,max (dwarskracht)	7488	kN
VRD,max (torsie)	19533	kN
Toetsing afschuiving door dwarskracht	0.10	
Toetsing afschuiving door torsie	0.17	
Totaal	0.27	

W6HL400 Bijlage J

Segment	**2**	
Lengte	**12**	**m**
Gewicht	**90.7**	**ton**

Betonklasse	B	Voldoet
Voorspananker	FeP1860	
Nkabel; `toegepast Buiten	18	Voldoet
Nkabel; `toegepast Binnen	8	
Dwarswapening	12	rond
Materiaal	550	Fb550
Aantal ringbeugels/meter hoogte	5	Voldoet

Keuze Betonklasse	A	B	C	D
	C55/67	C70/85	C80/95	C90/105
fck	55	70	80	90
yck	1.5	1.5	1.5	1.5
fcd	-36.7	-46.7	-53.3	-60.0
Trekspanning	0	0	0	0

Optredende spanningen

Segment	2		
Ingevulde wanddikte	450		
	Voet	Top	
Buitendiameter	2954	2407	mm
Buitenomtrek	9279	7563	mm
Wanddikte	450	450	mm
Binnendiameter	2054	1507	mm
Doorsnede	Hol	Hol	
Omtrek/dikte	20.62	16.81	Verhouding
Oppervlak	3539417	2766999	mm2
Weerstandsmoment	1938490433	1159021738	mm3
Maximale moment	44063	kNm	
Maximale moment + 2de orde	48470	kNm	
Maximaal dwarskracht	1665	kN	
Maximaal torsiemoment	3993683	kNmm	
Maximaal normaalkracht	2795	kN	
Spanning tgv normaalkracht	0.8	N/mm2	
Spanning tgv moment	25.4	N/mm2	
2de orde effect verrekening	10%		
Factor e.g	1.2		
Maximale drukspanning	-26.2	Mpa	
Toelaatbare spanning	-46.7	Komende uit betonklasse	
Maximale trekspanning	24.8	MPa	
Toelaatbare trekspanning	0.0	MPa	

Voorspanning

Benodigde voorspanning ULS	24.8	Mpa
Benodigde voorspanning SLS	25	Mpa
Benodigde voorspankracht	87204	kN
Resulterende betonspanningen		
Trekzijde	0	Mpa
Drukzijde	-51	Mpa
Na relaxatie	-45	MPa
Keuze voorspankabels	FeP1860	
Toelaatbare spanning	1200	MPa
Astreng	150	mm2
streng/kabel	19	
Akabel	2850	mm2
Benodigde voorspankracht	87204	kN
Nkabel; benodigd	26	
Nkabel; `toegepast Buiten	18	
Nkabel; `toegepast Binnen	8	
Ankerverdeling top		
Gegeven E6-19		
Randafstand ankers	230	mm
Minimale hoh-afstand ankers	300	mm
Anker circel buiten	1947	mm
Anker cirkel binnen	1347	mm
Omtrek ankercirkel buiten	6117	mm
Omtrek ankercirkel binnen	4233	mm
Aantal plaatsbare ankers buitenring	20	
Aantal plaatsbare ankers binnenring	14	

Afschuiving in wapening door dwarskracht **(NEN-EN 1992-1-1 Hfst. 6.2.3)**

Max. dwarskracht in segment	1665	kN
Max. dwarskracht / doorsnede	1655	kN
Maximale optredende afschuiving in de wand	1655	kN
Hoek loodrecht dwarskracht/drukdiagonaal	30	21,8≤Θ≤45
cot Θ	2	hoek
alfa	80	
cot alfa	0.18	
Asw	113	mm2
s	200	mm
z (horende max. dwarskracht)	2407	mm
fywd	478	Mpa
VRD,S	6116	kN
Toetsing afschuiving door dwarskracht	0.27	

Toetsing betonspanning	0.97	Voldoet
Toetsing afschuiving in wand	0.38	Voldoet

Afschuiving in wapening door torsie

Maximaal torsie	3993683	kNmm
Maximaal afschuiving torsie / doorsnede	4082	kN
Maximaal dwarskracht bij torsie	749	kN
Max. afschuiving wand door dwarskracht	749	kN
Hoek loodrecht dwarskracht/drukdiagonaal	30	21,8≤Θ≤45
cot Θ	2	hoek
alfa	80	
cot alfa	0.18	
Asw	113	mm2
s	200	mm
z (dwarskracht)	2407	mm
z (torsie)	6147	mm
fywd	478	Mpa
VRD,max (dwarskracht)	6116	kN
VRD,max (torsie)	15621	kN
Toetsing afschuiving door dwarskracht	0.12	
Toetsing afschuiving door torsie	0.26	
Totaal	0.38	

W6HL400 Bijlage J

Segment	**3**	
Lengte	**12**	**m**
Gewicht	**62.7**	**ton**

Betonklasse	B	Voldoet
Voorspananker	FeP1860	
Nkabel; `toegepast Buiten	12	Voldoet
Nkabel; `toegepast Binnen	6	
Dwarswapening	12	rond
Materiaal	550	Fb550
Aantal ringbeugels/meter hoogte	5	Voldoet

Keuze Betonklasse	A	B	C	D
	C55/67	C70/85	C80/95	C90/105
fck	55	70	80	90
yck	1.5	1.5	1.5	1.5
fcd	-36.7	-46.7	-53.3	-60.0
Trekspanning	0	0	0	0

Optredende spanningen

Segment	3		
Ingevulde wanddikte	400		
	Voet	Top	
Buitendiameter	2407	1861	mm
Buitenomtrek	7563	5846	mm
Wanddikte	400	400	mm
Binnendiameter	1607	1061	mm
Doorsnede	Hol	Hol	
Omtrek/dikte	18.91	14.62	Verhouding
Oppervlak	2522386	1835792	mm2
Weerstandsmoment	1097353430	565808934	mm3
Maximale moment	24462	kNm	
Maximale moment + 2de orde	26908	kNm	
Maximaal dwarskracht	1526	kN	
Maximaal torsiemoment	3993683	kNmm	
Maximaal normaalkracht	1709	kN	
Spanning tgv normaalkracht	0.7	N/mm2	
Spanning tgv moment	24.9	N/mm2	
2de orde effect verrekening	10%		
Factor e.g	1.2		
Maximale drukspanning	-25.6	Mpa	
Toelaatbare spanning	-46.7	Komende uit betonklasse	
Maximale trekspanning	24.4	MPa	
Toelaatbare trekspanning	0.0	MPa	

Voorspanning

Benodigde voorspanning ULS	24.4	Mpa
Benodigde voorspanning SLS	25	Mpa
Benodigde voorspankracht	61051	kN
Resulterende betonspanningen		
Trekzijde	0	Mpa
Drukzijde	-50	Mpa
Na relaxatie	-44	MPa
Keuze voorspankabels	FeP1860	
Toelaatbare spanning	1200	MPa
Astreng	150	mm2
streng/kabel	19	
Akabel	2850	mm2
Benodigde voorspankracht	61051	kN
Nkabel; benodigd	18	
Nkabel; `toegepast Buiten	12	
Nkabel; `toegepast Binnen	6	
Ankerverdeling top		
Gegeven E6-19		
Randafstand ankers	230	mm
Minimale hoh-afstand ankers	300	mm
Anker circel buiten	1401	mm
Anker cirkel binnen	801	mm
Omtrek ankercirkel buiten	4401	mm
Omtrek ankercirkel binnen	2516	mm
Aantal plaatsbare ankers buitenring	14	
Aantal plaatsbare ankers binnenring	8	

Afschuiving in wapening door dwarskracht **(NEN-EN 1992-1-1 Hfst. 6.2.3)**

Max. dwarskracht in segment	1526	kN
Max. dwarskracht / doorsnede	1522	kN
Maximale optredende afschuiving in de wand	1522	kN
Hoek loodrecht dwarskracht/drukdiagonaal	30	21,8≤Θ≤45
cot Θ	2	hoek
alfa	80	
cot alfa	0.18	
Asw	113	mm2
s	200	mm
z (horende max. dwarskracht)	2164	mm
fywd	478	Mpa
VRD,S	5498	kN
Toetsing afschuiving door dwarskracht	0.28	

Toetsing betonspanning	0.95	Voldoet
Toetsing afschuiving in wand	0.45	Voldoet

Afschuiving in wapening door torsie

Maximaal torsie	3993683	kNmm
Maximaal afschuiving torsie / doorsnede	4529	kN
Maximaal dwarskracht bij torsie	687	kN
Max. afschuiving wand door dwarskracht	687	kN
Hoek loodrecht dwarskracht/drukdiagonaal	30	21,8≤Θ≤45
cot Θ	2	hoek
alfa	80	
cot alfa	0.18	
Asw	113	mm2
s	200	mm
z (dwarskracht)	2164	mm
z (torsie)	5540	mm
fywd	478	Mpa
VRD,max (dwarskracht)	5498	kN
VRD,max (torsie)	14080	kN
Toetsing afschuiving door dwarskracht	0.12	
Toetsing afschuiving door torsie	0.32	
Totaal	0.45	

W6HL400 Bijlage J

Segment	**4**	
Lengte	**12**	**m**
Gewicht	**34.8**	**ton**

Betonklasse	B	Voldoet
Voorspananker	FeP1860	
Nkabel; `toegepast Buiten	8	Voldoet
Nkabel; `toegepast Binnen	2	
Dwarswapening	12	rond
Materiaal	550	Fb550
Aantal ringbeugels/meter hoogte	5	Voldoet

Keuze Betonklasse	A	B	C	D
	C55/67	C70/85	C80/95	C90/105
fck	55	70	80	90
yck	1.5	1.5	1.5	1.5
fcd	-36.7	-46.7	-53.3	-60.0
Trekspanning	0	0	0	0
	0			
	0			

Optredende spanningen

Segment	4		
Ingevulde wanddikte	300		
	Voet	Top	
Buitendiameter	1861	1315	mm
Buitenomtrek	5846	4130	mm
Wanddikte	300	300	mm
Binnendiameter	1261	715	mm
Doorsnede	Hol	Hol	
Omtrek/dikte	19.49	13.77	Verhouding
Oppervlak	1471092	956146	mm2
Weerstandsmoment	499290581	203524415	mm3
Maximale moment	9749	kNm	
Maximale moment + 2de orde	10724	kNm	
Maximaal dwarskracht	1049	kN	
Maximaal torsiemoment	2728723	kNmm	
Maximaal normaalkracht	854	kN	
Spanning tgv normaalkracht	0.6	N/mm2	
Spanning tgv moment	21.7	N/mm2	
2de orde effect verrekening	10%		
Factor e.g	1.2		
Maximale drukspanning	-22.3	Mpa	
Toelaatbare spanning	-46.7	Komende uit betonklasse	
Maximale trekspanning	21.3	MPa	
Toelaatbare trekspanning	0.0	MPa	

Voorspanning

Benodigde voorspanning ULS	21.3	Mpa
Benodigde voorspanning SLS	22	Mpa
Benodigde voorspankracht	31132	kN
Resulterende betonspanningen		
Trekzijde	0	Mpa
Drukzijde	-44	Mpa
Na relaxatie	-39	MPa
Keuze voorspankabels	FeP1860	
Toelaatbare spanning	1200	MPa
Astreng	150	mm2
streng/kabel	19	
Akabel	2850	mm2
Benodigde voorspankracht	31132	kN
Nkabel; benodigd	10	
Nkabel; `toegepast Buiten	8	
Nkabel; `toegepast Binnen	2	

Ankerverdeling top

Gegeven E6-19		
Randafstand ankers	230	mm
Minimale hoh-afstand ankers	300	mm
Anker circel buiten	855	mm
Anker cirkel binnen	255	mm
Omtrek ankercirkel buiten	2684	mm
Omtrek ankercirkel binnen	800	mm
Aantal plaatsbare ankers buitenring	8	
Aantal plaatsbare ankers binnenring	2	

Afschuiving in wapening door dwarskracht **(NEN-EN 1992-1-1 Hfst. 6.2.3)**

Max. dwarskracht in segment	1049	kN
Max. dwarskracht / doorsnede	1047	kN
Maximale optredende afschuiving in de wand	1047	kN
Hoek loodrecht dwarskracht/drukdiagonaal	30	21,8≤Θ≤45
cot Θ	2	hoek
alfa	80	
cot alfa	0.18	
Asw	113	mm2
s	200	mm
z (horende max. dwarskracht)	1705	mm
fywd	478	Mpa
VRD,S	4332	kN
Toetsing afschuiving door dwarskracht	0.24	

Afschuiving in wapening door torsie

Maximaal torsie	2728723	kNmm
Maximaal afschuiving torsie / doorsned	3886	kN
Maximaal dwarskracht bij torsie	472	kN
Max. afschuiving wand door dwarskrac	472	kN
Hoek loodrecht dwarskracht/drukdiago	30	21,8≤Θ≤45
cot Θ	2	hoek
alfa	80	
cot alfa	0.18	
Asw	113	mm2
s	200	mm
z (dwarskracht)	1705	mm
z (torsie)	4412	mm
fywd	478	Mpa
VRD,max (dwarskracht)	4332	kN
VRD,max (torsie)	11214	kN
Toetsing afschuiving door dwarskracht	0.11	
Toetsing afschuiving door torsie	0.35	
Totaal	0.46	

Toetsing betonspanning	0.83	Voldoet
Toetsing afschuiving in wand	0.46	Voldoet

W6HL400 Bijlage J

Segment	**5**	
Lengte	**11.3**	**m**
Gewicht	**16.1**	**ton**

Betonklasse	A	Voldoet
Voorspananker	FeP1860	
Nkabel; `toegepast Buiten	2	Voldoet
Nkabel; `toegepast Binnen	0	
Dwarswapening	12	rond
Materiaal	550	Fb550
Aantal ringbeugels/meter hoogte	5	Voldoet

Keuze Betonklasse	A	B	C	D
	C55/67	C70/85	C80/95	C90/105
fck	55	70	80	90
yck	1.5	1.5	1.5	1.5
fcd	-36.7	-46.7	-53.3	-60.0
Trekspanning	0	0	0	0

Optredende spanningen

Segment	5		
Ingevulde wanddikte	150		
	Voet	Top	
Buitendiameter	1315	800	mm
Buitenomtrek	4130	2513	mm
Wanddikte	150	150	mm
Binnendiameter	1015	500	mm
Doorsnede	Hol	Hol	
Omtrek/dikte	27.53	16.76	Verhouding
Oppervlak	548759	306305	mm2
Weerstandsmoment	143875802	42595579	mm3
Maximale moment	1633	kNm	
Maximale moment + 2de orde	1797	kNm	
Maximaal dwarskracht	561	kN	
Maximaal torsiemoment	1438871	kNmm	
Maximaal normaalkracht	326	kN	
Spanning tgv normaalkracht	0.6	N/mm2	
Spanning tgv moment	12.5	N/mm2	
2de orde effect verrekening	10%		
Factor e.g	1.2		
Maximale drukspanning	-13.1	Mpa	
Toelaatbare spanning	-36.7	Komende uit betonklasse	
Maximale trekspanning	11.9	MPa	
Toelaatbare trekspanning	0.0	MPa	

Voorspanning

Benodigde voorspanning ULS	11.9	Mpa
Benodigde voorspanning SLS	12	Mpa
Benodigde voorspankracht	6618	kN
Resulterende betonspanningen		
Trekzijde	0	Mpa
Drukzijde	-25	Mpa
Na relaxatie	-23	MPa
Keuze voorspankabels	FeP1860	
Toelaatbare spanning	1200	MPa
Astreng	150	mm2
streng/kabel	19	
Akabel	2850	mm2
Benodigde voorspankracht	6618	kN
Nkabel; benodigd	2	
Nkabel; `toegepast Buiten	2	
Nkabel; `toegepast Binnen	0	
Ankerverdeling top		
Gegeven E6-19		
Randafstand ankers	230	mm
Minimale hoh-afstand ankers	300	mm
Anker circel buiten	340	mm
Anker cirkel binnen	-260	mm
Omtrek ankercirkel buiten	1068	mm
Omtrek ankercirkel binnen	-817	mm
Aantal plaatsbare ankers buitenring	3	
Aantal plaatsbare ankers binnenring	-2	

Afschuiving in wapening door dwarskracht **(NEN-EN 1992-1-1 Hfst. 6.2.3)**

Max. dwarskracht in segment		561	kN
Max. dwarskracht / doorsnede		560	kN
Maximale optredende afschuiving in de wand		560	kN
Hoek loodrecht dwarskracht/drukdiagonaal		30	21,8≤Θ≤45
cot Θ		2	hoek
alfa		80	
cot alfa		0.18	
Asw		113	mm2
s		200	mm
z (horende max. dwarskracht)		1219	mm
fywd		478	Mpa
VRD,S		3097	kN
Toetsing afschuiving door dwarskracht		0.18	0
	0	0	0

Toetsing betonspanning	0.64	Voldoet
Toetsing afschuiving in wand	0.40	Voldoet

Afschuiving in wapening door torsie

Maximaal torsie	1438871	kNmm
Maximaal afschuiving torsie / doorsned	2693	kN
Maximaal dwarskracht bij torsie	252	kN
Max. afschuiving wand door dwarskra	252	kN
Hoek loodrecht dwarskracht/drukdiago	30	21,8≤Θ≤45
cot Θ	2	hoek
alfa	80	
cot alfa	0.18	
Asw	113	mm2
s	200	mm
z (dwarskracht)	1219	mm
z (torsie)	3357	mm
fywd	478	Mpa
VRD,max (dwarskracht)	3097	kN
VRD,max (torsie)	8531	kN
Toetsing afschuiving door dwarskracht	0.08	
Toetsing afschuiving door torsie	0.32	
Totaal	0.40	

W6HL400 Bijlage J

Segment	**6**	
Lengte	**0**	**m**
Gewicht	**0.0**	**ton**

Betonklasse	A	Voldoet niet
Voorspananker	FeP1860	
Nkabel; `toegepast Buiten	2	Voldoet
Nkabel; `toegepast Binnen	0	
Dwarswapening	12	rond
Materiaal	550	Fb550
Aantal ringbeugels/meter hoogte	5	Voldoet

Keuze Betonklasse	A	B	C	D
	C55/67	C70/85	C80/95	C90/105
fck	55	70	80	90
yck	1.5	1.5	1.5	1.5
fcd	-36.7	-46.7	-53.3	-60.0
Trekspanning	0	0	0	0

Optredende spanningen

Segment	6		
Ingevulde wanddikte	0		
	Voet	Top	
Buitendiameter	800	800	mm
Buitenomtrek	2513	2513	mm
Wanddikte	0	0	mm
Binnendiameter	0	0	mm
Doorsnede	Solid	Solid	
Omtrek/dikte	0.00	0.00	Verhouding
Oppervlak	502655	502655	mm2
Weerstandsmoment	50265482	50265482	mm3
Maximale moment	0	kNm	
Maximale moment + 2de orde	0	kNm	
Maximaal dwarskracht	0	kN	
Maximaal torsiemoment	0	kNmm	
Maximaal normaalkracht	0	kN	
Spanning tgv normaalkracht	0.0	N/mm2	
Spanning tgv moment	21.7	N/mm2	
2de orde effect verrekening	10%		
Factor e.g	1.2		
Maximale drukspanning	-21.7	Mpa	
Toelaatbare spanning	-36.7	Komende uit betonklasse	
Maximale trekspanning	21.7	MPa	
Toelaatbare trekspanning	0.0	MPa	

Voorspanning

Benodigde voorspanning ULS	21.7	Mpa
Benodigde voorspanning SLS	22	Mpa
Benodigde voorspankracht	0	kN
Resulterende betonspanningen		
Trekzijde	0	Mpa
Drukzijde	-43	Mpa
Na relaxatie	-41	MPa
Keuze voorspankabels	FeP1860	
Toelaatbare spanning	1200	MPa
Astreng	150	mm2
streng/kabel	19	
Akabel	2850	mm2
Benodigde voorspankracht	0	kN
Nkabel; benodigd	0	
Nkabel; `toegepast Buiten	2	
Nkabel; `toegepast Binnen	0	
Ankerverdeling top		
Gegeven E6-19		
Randafstand ankers	230	mm
Minimale hoh-afstand ankers	300	mm
Anker circel buiten	340	mm
Anker cirkel binnen	-260	mm
Omtrek ankercirkel buiten	1068	mm
Omtrek ankercirkel binnen	-817	mm
Aantal plaatsbare ankers buitenring	3	
Aantal plaatsbare ankers binnenring	-2	

Afschuiving in wapening door dwarskracht **(NEN-EN 1992-1-1 Hfst. 6.2.3)**

Max. dwarskracht in segment	0	kN
Max. dwarskracht / doorsnede	#N/A	kN
Maximale optredende afschuiving in de wand	#N/A	kN
Hoek loodrecht dwarskracht/drukdiagonaal	30	21,8≤Θ≤45
cot Θ	2	hoek
alfa	80	
cot alfa	0.18	
Asw	113	mm2
s	200	mm
z (horende max. dwarskracht)	#N/A	mm
fywd	478	Mpa
VRD,S	#N/A	kN
Toetsing afschuiving door dwarskracht	#N/A	

Toetsing betonspanning	1.12	Voldoet niet
Toetsing afschuiving in wand	#N/A	#N/A

Afschuiving in wapening door torsie

Maximaal torsie	0	kNmm
Maximaal afschuiving torsie / doorsnec	#N/A	kN
Maximaal dwarskracht bij torsie	0	kN
Max. afschuiving wand door dwarskra	0	kN
Hoek loodrecht dwarskracht/drukdiago	30	21,8≤Θ≤45
cot Θ	2	hoek
alfa	80	
cot alfa	0.18	
Asw	113	mm2
s	200	mm
z (dwarskracht)	#N/A	mm
z (torsie)	#N/A	mm
fywd	478	Mpa
VRD,max (dwarskracht)	#N/A	kN
VRD,max (torsie)	#N/A	kN
Toetsing afschuiving door dwarskracht	#N/A	
Toetsing afschuiving door torsie	#N/A	
Totaal	#N/A	

W6S400 Bijlage I

Segment	**1**	
Lengte	**12**	**m**
Gewicht	**83.7**	**ton**

Betonklasse	A	Voldoet
Voorspananker	FeP1860	
Nkabel; `toegepast Buiten	12	Voldoet
Nkabel; `toegepast Binnen	4	
Dwarswapening	12	rond
Materiaal	550	Fb550
Aantal ringbeugels/meter hoogte	5	Voldoet

Keuze Betonklasse	A	B	C	D
	C55/67	C70/85	C80/95	C90/105
fck	55	70	80	90
yck	1.5	1.5	1.5	1.5
fcd	-36.7	-46.7	-53.3	-60.0
Trekspanning	0	0	0	0

Optredende spanningen

Segment	1		
Ingevulde wanddikte	500		
	Voet	Top	
Buitendiameter	2400	2079	mm
Buitenomtrek	7540	6533	mm
Wanddikte	500	500	mm
Binnendiameter	1400	1079	mm
Doorsnede	Hol	Hol	
Omtrek/dikte	15.08	13.07	Verhouding
Oppervlak	2984513	2481019	mm2
Weerstandsmoment	1200022944	818681792	mm3
Maximale moment	20652	kNm	
Maximale moment + 2de orde	22718	kNm	
Maximaal dwarskracht	541	kN	
Maximaal torsiemoment	0	kNmm	
Maximaal normaalkracht	2904	kN	
Spanning tgv normaalkracht	1.0	N/mm2	
Spanning tgv moment	19.2	N/mm2	
2de orde effect verrekening	10%		
Factor e.g	1.2		
Maximale drukspanning	-20.2	Mpa	
Toelaatbare spanning	-36.7	Komende uit betonklasse	
Maximale trekspanning	18.5	MPa	
Toelaatbare trekspanning	0.0	MPa	

Voorspanning

Benodigde voorspanning ULS	18.5	Mpa
Benodigde voorspanning SLS	15	Mpa
Benodigde voorspankracht	54322	kN
Resulterende betonspanningen		
Trekzijde	0	Mpa
Drukzijde	-39	Mpa
Na relaxatie	-36	MPa
Keuze voorspankabels	FeP1860	
Toelaatbare spanning	1200	MPa
Astreng	150	mm2
streng/kabel	19	
Akabel	2850	mm2
Benodigde voorspankracht	54322	kN
Nkabel; benodigd	16	
Nkabel; `toegepast Buiten	12	
Nkabel; `toegepast Binnen	4	
Ankerverdeling top		
Gegeven E6-19		
Randafstand ankers	230	mm
Minimale hoh-afstand ankers	300	mm
Anker circel buiten	1619	mm
Anker cirkel binnen	1019	mm
Omtrek ankercirkel buiten	5088	mm
Omtrek ankercirkel binnen	3203	mm
Aantal plaatsbare ankers buitenring	16	
Aantal plaatsbare ankers binnenring	10	

Afschuiving in wapening door dwarskracht **(NEN-EN 1992-1-1 Hfst. 6.2.3)**

Max. dwarskracht in segment	541	kN
Max. dwarskracht / doorsnede	534	kN
Maximale optredende afschuiving in de wand	534	kN
Hoek loodrecht dwarskracht/drukdiagonaal	30	21,8≤Θ≤45
cot Θ	2	hoek
alfa	80	
cot alfa	0.18	
Asw	113	mm2
s	200	mm
z (horende max. dwarskracht)	2072	mm
fywd	478	Mpa
VRD,S	5266	kN
Toetsing afschuiving door dwarskracht	0.10	

Toetsing betonspanning	0.97	Voldoet
Toetsing afschuiving in wand	0.10	Voldoet

Afschuiving in wapening door torsie

Maximaal torsie	0	kNmm
Maximaal afschuiving torsie / doorsnede	0	kN
Maximaal dwarskracht bij torsie	0	kN
Max. afschuiving wand door dwarskracht	0	kN
Hoek loodrecht dwarskracht/drukdiagonaal	30	21,8≤Θ≤45
cot Θ	2	hoek
alfa	80	
cot alfa	0.18	
Asw	113	mm2
s	200	mm
z (dwarskracht)	2072	mm
z (torsie)	942	mm
fywd	478	Mpa
VRD,max (dwarskracht)	5266	kN
VRD,max (torsie)	2395	kN
Toetsing afschuiving door dwarskracht	0.00	
Toetsing afschuiving door torsie	0.00	
Totaal	0.00	

W6S400 Bijlage I

Segment	**2**	
Lengte	**12**	**m**
Gewicht	**60.2**	**ton**

Betonklasse	A	Voldoet
Voorspananker	FeP1860	
Nkabel; `toegepast Buiten	12	Voldoet
Nkabel; `toegepast Binnen	4	
Dwarswapening	12	rond
Materiaal	550	Fb550
Aantal ringbeugels/meter hoogte	5	Voldoet

Keuze Betonklasse	A	B	C	D
	C55/67	C70/85	C80/95	C90/105
fck	55	70	80	90
yck	1.5	1.5	1.5	1.5
fcd	-36.7	-46.7	-53.3	-60.0
Trekspanning	0	0	0	0

Optredende spanningen

Segment	2		
Ingevulde wanddikte	450		
	Voet	Top	
Buitendiameter	2079	1759	mm
Buitenomtrek	6533	5526	mm
Wanddikte	450	450	mm
Binnendiameter	1179	859	mm
Doorsnede	Hol	Hol	
Omtrek/dikte	14.52	12.28	Verhouding
Oppervlak	2303603	1850458	mm2
Weerstandsmoment	791418544	503872866	mm3
Maximale moment	13897	kNm	
Maximale moment + 2de orde	15287	kNm	
Maximaal dwarskracht	533	kN	
Maximaal torsiemoment	0	kNmm	
Maximaal normaalkracht	1918	kN	
Spanning tgv normaalkracht	0.8	N/mm2	
Spanning tgv moment	19.7	N/mm2	
2de orde effect verrekening	10%		
Factor e.g	1.2		
Maximale drukspanning	-20.5	Mpa	
Toelaatbare spanning	-36.7	Komende uit betonklasse	
Maximale trekspanning	19.1	MPa	
Toelaatbare trekspanning	0.0	MPa	

Voorspanning

Benodigde voorspanning ULS	19.1	Mpa
Benodigde voorspanning SLS	15	Mpa
Benodigde voorspankracht	43517	kN
Resulterende betonspanningen		
Trekzijde	0	Mpa
Drukzijde	-40	Mpa
Na relaxatie	-35	MPa
Keuze voorspankabels	FeP1860	
Toelaatbare spanning	1200	MPa
Astreng	150	mm2
streng/kabel	19	
Akabel	2850	mm2
Benodigde voorspankracht	43517	kN
Nkabel; benodigd	13	
Nkabel; `toegepast Buiten	12	
Nkabel; `toegepast Binnen	4	
Ankerverdeling top		
Gegeven E6-19		
Randafstand ankers	230	mm
Minimale hoh-afstand ankers	300	mm
Anker circel buiten	1299	mm
Anker cirkel binnen	699	mm
Omtrek ankercirkel buiten	4081	mm
Omtrek ankercirkel binnen	2196	mm
Aantal plaatsbare ankers buitenring	13	
Aantal plaatsbare ankers binnenring	7	

Afschuiving in wapening door dwarskracht **(NEN-EN 1992-1-1 Hfst. 6.2.3)**

Max. dwarskracht in segment	533	kN
Max. dwarskracht / doorsnede	527	kN
Maximale optredende afschuiving in de wand	527	kN
Hoek loodrecht dwarskracht/drukdiagonaal	30	21,8≤Θ≤45
cot Θ	2	hoek
alfa	80	
cot alfa	0.18	
Asw	113	mm2
s	200	mm
z (horende max. dwarskracht)	1768	mm
fywd	478	Mpa
VRD,S	4493	kN
Toetsing afschuiving door dwarskracht	0.12	

Toetsing betonspanning	0.96	Voldoet
Toetsing afschuiving in wand	0.12	Voldoet

Afschuiving in wapening door torsie

Maximaal torsie	0	kNmm
Maximaal afschuiving torsie / doorsnede	0	kN
Maximaal dwarskracht bij torsie	0	kN
Max. afschuiving wand door dwarskracht	0	kN
Hoek loodrecht dwarskracht/drukdiagonaal	30	21,8≤Θ≤45
cot Θ	2	hoek
alfa	80	
cot alfa	0.18	
Asw	113	mm2
s	200	mm
z (dwarskracht)	1768	mm
z (torsie)	1100	mm
fywd	478	Mpa
VRD,max (dwarskracht)	4493	kN
VRD,max (torsie)	2794	kN
Toetsing afschuiving door dwarskracht	0.00	
Toetsing afschuiving door torsie	0.00	
Totaal	0.00	

W6S400 Bijlage I

Segment	**3**	
Lengte	**12**	**m**
Gewicht	**43.5**	**ton**

Betonklasse	A	Voldoet
Voorspananker	FeP1860	
Nkabel; `toegepast Buiten	8	Voldoet
Nkabel; `toegepast Binnen	2	
Dwarswapening	12	rond
Materiaal	550	Fb550
Aantal ringbeugels/meter hoogte	5	Voldoet

Keuze Betonklasse	A	B	C	D
	C55/67	C70/85	C80/95	C90/105
fck	55	70	80	90
yck	1.5	1.5	1.5	1.5
fcd	-36.7	-46.7	-53.3	-60.0
Trekspanning	0	0	0	0

Optredende spanningen

Segment	3		
Ingevulde wanddikte	400		
	Voet	Top	
Buitendiameter	1759	1438	mm
Buitenomtrek	5526	4519	mm
Wanddikte	400	400	mm
Binnendiameter	959	638	mm
Doorsnede	Hol	Hol	
Omtrek/dikte	13.81	11.30	Verhouding
Oppervlak	1707684	1304889	mm2
Weerstandsmoment	487057098	280833926	mm3
Maximale moment	7657	kNm	
Maximale moment + 2de orde	8423	kNm	
Maximaal dwarskracht	440	kN	
Maximaal torsiemoment	0	kNmm	
Maximaal normaalkracht	1175	kN	
Spanning tgv normaalkracht	0.7	N/mm2	
Spanning tgv moment	17.7	N/mm2	
2de orde effect verrekening	10%		
Factor e.g	1.2		
Maximale drukspanning	-18.4	Mpa	
Toelaatbare spanning	-36.7	Komende uit betonklasse	
Maximale trekspanning	17.2	MPa	
Toelaatbare trekspanning	0.0	MPa	

Voorspanning

Benodigde voorspanning ULS	17.2	Mpa
Benodigde voorspanning SLS	14	Mpa
Benodigde voorspankracht	29002	kN
Resulterende betonspanningen		
Trekzijde	0	Mpa
Drukzijde	-36	Mpa
Na relaxatie	-32	MPa
Keuze voorspankabels	FeP1860	
Toelaatbare spanning	1200	MPa
Astreng	150	mm2
streng/kabel	19	
Akabel	2850	mm2
Benodigde voorspankracht	29002	kN
Nkabel; benodigd	9	
Nkabel; `toegepast Buiten	8	
Nkabel; `toegepast Binnen	2	
Ankerverdeling top		
Gegeven E6-19		
Randafstand ankers	230	mm
Minimale hoh-afstand ankers	300	mm
Anker circel buiten	978	mm
Anker cirkel binnen	378	mm
Omtrek ankercirkel buiten	3074	mm
Omtrek ankercirkel binnen	1189	mm
Aantal plaatsbare ankers buitenring	10	
Aantal plaatsbare ankers binnenring	3	

Afschuiving in wapening door dwarskracht **(NEN-EN 1992-1-1 Hfst. 6.2.3)**

Max. dwarskracht in segment	440	kN
Max. dwarskracht / doorsnede	437	kN
Maximale optredende afschuiving in de wand	437	kN
Hoek loodrecht dwarskracht/drukdiagonaal	30	21,8≤Θ≤45
cot Θ	2	hoek
alfa	80	
cot alfa	0.18	
Asw	113	mm2
s	200	mm
z (horende max. dwarskracht)	1608	mm
fywd	478	Mpa
VRD,S	4087	kN
Toetsing afschuiving door dwarskracht	0.11	

Toetsing betonspanning	0.88	Voldoet
Toetsing afschuiving in wand	0.11	Voldoet

Afschuiving in wapening door torsie

Maximaal torsie	0	kNmm
Maximaal afschuiving torsie / doorsnede	0	kN
Maximaal dwarskracht bij torsie	0	kN
Max. afschuiving wand door dwarskracht	0	kN
Hoek loodrecht dwarskracht/drukdiagonaal	30	21,8≤Θ≤45
cot Θ	2	hoek
alfa	80	
cot alfa	0.18	
Asw	113	mm2
s	200	mm
z (dwarskracht)	1608	mm
z (torsie)	1257	mm
fywd	478	Mpa
VRD,max (dwarskracht)	4087	kN
VRD,max (torsie)	3194	kN
Toetsing afschuiving door dwarskracht	0.00	
Toetsing afschuiving door torsie	0.00	
Totaal	0.00	

W6S400 Bijlage I

Segment	**4**	
Lengte	**12**	**m**
Gewicht	**26.4**	**ton**

Betonklasse	A	Voldoet
Voorspananker	FeP1860	
Nkabel; `toegepast Buiten	6	Voldoet
Nkabel; `toegepast Binnen	0	
Dwarswapening	12	rond
Materiaal	550	Fb550
Aantal ringbeugels/meter hoogte	5	Voldoet

Keuze Betonklasse	A	B	C	D
	C55/67	C70/85	C80/95	C90/105
fck	55	70	80	90
yck	1.5	1.5	1.5	1.5
fcd	-36.7	-46.7	-53.3	-60.0
Trekspanning	0	0	0	0
	0			
	0			

Optredende spanningen

Segment	4		
Ingevulde wanddikte	300		
	Voet	Top	
Buitendiameter	1438	1118	mm
Buitenomtrek	4519	3512	mm
Wanddikte	300	300	mm
Binnendiameter	838	518	mm
Doorsnede	Hol	Hol	
Omtrek/dikte	15.06	11.71	Verhouding
Oppervlak	1072914	770818	mm2
Weerstandsmoment	258448028	130824088	mm3
Maximale moment	3090	kNm	
Maximale moment + 2de orde	3399	kNm	
Maximaal dwarskracht	341	kN	
Maximaal torsiemoment	0	kNmm	
Maximaal normaalkracht	619	kN	
Spanning tgv normaalkracht	0.6	N/mm2	
Spanning tgv moment	13.5	N/mm2	
2de orde effect verrekening	10%		
Factor e.g	1.2		
Maximale drukspanning	-14.1	Mpa	
Toelaatbare spanning	-36.7	Komende uit betonklasse	
Maximale trekspanning	13.1	MPa	
Toelaatbare trekspanning	0.0	MPa	

Voorspanning

Benodigde voorspanning ULS	13.1	Mpa
Benodigde voorspanning SLS	10	Mpa
Benodigde voorspankracht	13841	kN
Resulterende betonspanningen		
Trekzijde	0	Mpa
Drukzijde	-27	Mpa
Na relaxatie	-25	MPa
Keuze voorspankabels	FeP1860	
Toelaatbare spanning	1200	MPa
Astreng	150	mm2
streng/kabel	19	
Akabel	2850	mm2
Benodigde voorspankracht	13841	kN
Nkabel; benodigd	5	
Nkabel; `toegepast Buiten	6	
Nkabel; `toegepast Binnen	0	
Ankerverdeling top		
Gegeven E6-19		
Randafstand ankers	230	mm
Minimale hoh-afstand ankers	300	mm
Anker circel buiten	658	mm
Anker cirkel binnen	58	mm
Omtrek ankercirkel buiten	2067	mm
Omtrek ankercirkel binnen	182	mm
Aantal plaatsbare ankers buitenring	6	
Aantal plaatsbare ankers binnenring	0	

Afschuiving in wapening door dwarskracht **(NEN-EN 1992-1-1 Hfst. 6.2.3)**

Max. dwarskracht in segment	341	kN
Max. dwarskracht / doorsnede	339	kN
Maximale optredende afschuiving in de wand	339	kN
Hoek loodrecht dwarskracht/drukdiagonaal	30	21,8≤Θ≤45
cot Θ	2	hoek
alfa	80	
cot alfa	0.18	
Asw	113	mm2
s	200	mm
z (horende max. dwarskracht)	1336	mm
fywd	478	Mpa
VRD,S	3395	kN
Toetsing afschuiving door dwarskracht	0.10	

Toetsing betonspanning	0.67	Voldoet
Toetsing afschuiving in wand	0.10	Voldoet

Afschuiving in wapening door torsie

Maximaal torsie	0	kNmm
Maximaal afschuiving torsie / doorsned	0	kN
Maximaal dwarskracht bij torsie	0	kN
Max. afschuiving wand door dwarskrac	0	kN
Hoek loodrecht dwarskracht/drukdiago	30	21,8≤Θ≤45
cot Θ	2	hoek
alfa	80	
cot alfa	0.18	
Asw	113	mm2
s	200	mm
z (dwarskracht)	1336	mm
z (torsie)	1571	mm
fywd	478	Mpa
VRD,max (dwarskracht)	3395	kN
VRD,max (torsie)	3992	kN
Toetsing afschuiving door dwarskracht	0.00	
Toetsing afschuiving door torsie	0.00	
Totaal	0.00	

W6S400 Bijlage I

Segment	**5**	
Lengte	**11.9**	**m**
Gewicht	**14.2**	**ton**

Betonklasse	A	Voldoet
Voorspananker	FeP1860	
Nkabel; `toegepast Buiten	2	Voldoet
Nkabel; `toegepast Binnen	0	
Dwarswapening	12	rond
Materiaal	550	Fb550
Aantal ringbeugels/meter hoogte	5	Voldoet

Keuze Betonklasse	A	B	C	D
	C55/67	C70/85	C80/95	C90/105
fck	55	70	80	90
yck	1.5	1.5	1.5	1.5
fcd	-36.7	-46.7	-53.3	-60.0
Trekspanning	0	0	0	0

Optredende spanningen

Segment	5		
Ingevulde wanddikte	150		
	Voet	Top	
Buitendiameter	1118	800	mm
Buitenomtrek	3512	2513	mm
Wanddikte	150	150	mm
Binnendiameter	818	500	mm
Doorsnede	Hol	Hol	
Omtrek/dikte	23.41	16.76	Verhouding
Oppervlak	456095	306305	mm2
Weerstandsmoment	97845832	42595579	mm3
Maximale moment	388	kNm	
Maximale moment + 2de orde	427	kNm	
Maximaal dwarskracht	185	kN	
Maximaal torsiemoment	0	kNmm	
Maximaal normaalkracht	240	kN	
Spanning tgv normaalkracht	0.5	N/mm2	
Spanning tgv moment	4.5	N/mm2	
2de orde effect verrekening	10%		
Factor e.g	1.2		
Maximale drukspanning	-5.0	Mpa	
Toelaatbare spanning	-36.7	Komende uit betonklasse	
Maximale trekspanning	4.0	MPa	
Toelaatbare trekspanning	0.0	MPa	

Voorspanning

Benodigde voorspanning ULS	4.0	Mpa
Benodigde voorspanning SLS	3	Mpa
Benodigde voorspankracht	1842	kN
Resulterende betonspanningen		
Trekzijde	0	Mpa
Drukzijde	-9	Mpa
Na relaxatie	-8	MPa
Keuze voorspankabels	FeP1860	
Toelaatbare spanning	1200	MPa
Astreng	150	mm2
streng/kabel	19	
Akabel	2850	mm2
Benodigde voorspankracht	1842	kN
Nkabel; benodigd	1	
Nkabel; `toegepast Buiten	2	
Nkabel; `toegepast Binnen	0	
Ankerverdeling top		
Gegeven E6-19		
Randafstand ankers	230	mm
Minimale hoh-afstand ankers	300	mm
Anker circel buiten	340	mm
Anker cirkel binnen	-260	mm
Omtrek ankercirkel buiten	1068	mm
Omtrek ankercirkel binnen	-817	mm
Aantal plaatsbare ankers buitenring	3	
Aantal plaatsbare ankers binnenring	-2	

Afschuiving in wapening door dwarskracht **(NEN-EN 1992-1-1 Hfst. 6.2.3)**

Max. dwarskracht in segment		185	kN
Max. dwarskracht / doorsnede		185	kN
Maximale optredende afschuiving in de wand		185	kN
Hoek loodrecht dwarskracht/drukdiagonaal		30	21,8≤Θ≤45
cot Θ		2	hoek
alfa		80	
cot alfa		0.18	
Asw		113	mm2
s		200	mm
z (horende max. dwarskracht)		1064	mm
fywd		478	Mpa
VRD,S		2704	kN
Toetsing afschuiving door dwarskracht		0.07	0
	0	0	0

Toetsing betonspanning	0.23	Voldoet
Toetsing afschuiving in wand	0.07	Voldoet

Afschuiving in wapening door torsie

Maximaal torsie	0	kNmm
Maximaal afschuiving torsie / doorsned	0	kN
Maximaal dwarskracht bij torsie	0	kN
Max. afschuiving wand door dwarskra	0	kN
Hoek loodrecht dwarskracht/drukdiago	30	21,8≤Θ≤45
cot Θ	2	hoek
alfa	80	
cot alfa	0.18	
Asw	113	mm2
s	200	mm
z (dwarskracht)	1064	mm
z (torsie)	2042	mm
fywd	478	Mpa
VRD,max (dwarskracht)	2704	kN
VRD,max (torsie)	5190	kN
Toetsing afschuiving door dwarskracht	0.00	
Toetsing afschuiving door torsie	0.00	
Totaal	0.00	

Engineering ZW380 Constructieberekening funderingen voor betonnen en hybride masten ten behoeve van vergunningaanvraag

TenneT TSO B.V.

Rapport nr.: 13-3180, revisie 6.0
Datum: 2015-04-22

		DNV GL - Energy
Rapport titel:	Engineering ZW380 Constructieberekening funderingen voor betonnen en hybride masten ten behoeve van vergunningaanvraag	KEMA Nederland B.V. Postbus 9035 6800 ET ARNHEM
Klant:	TenneT TSO B.V. Projectnummer 000.145.11	Tel: +31 26 356 9111 KvK 09080262
Datum:	2015-04-22	
Project nr.:	74102194	
Unit:	PMT/POL	
Rapport nr.:	13-3180, revisie 6.0	

Auteur:	Beoordeeld:	Goedgekeurd:
E.J. Platenkamp	A.J.P. van der Wekken	A. van der Wal

☒ Unrestricted distribution (internal and external)
☐ Unrestricted distribution within DNV GL
☐ Limited distribution within DNV GL after 3 years
☐ No distribution (confidential)
☐ Secret

Reference to part of this report which may lead to misinterpretation is not permissible.

Versie	Datum	Reden voor uitgave	Auteur	Beoordeeld	Goedgekeurd
6.0	2015-04-16	Wijziging uitgangspunten	E.J. Platenkamp	A.J.P. van der Wekken	A. van der Wal

© 2015 KEMA Nederland B.V.

Inhoud

1 INLEIDING 1

2 UITGANGSPUNTEN 1
2.1 Gebruikte normen 2
2.2 Materiaal typeringen mast 2
2.3 Constructie typering 2

3 ONTWERP FUNDERINGFAMILIE 2
3.1 Funderingsprincipe 3
3.2 Materialen 4
3.3 Overige uitgangspunten 4
3.4 Voorspanning 5
3.5 Berekening onderplaat betonfundering 6
3.6 Ondersteuning betonpoer 6
3.7 Fundering belastingen 7
3.8 ZW380 fundering afmetingen 7

Appendix A Berekening W2S400
Appendix B Berekening W2H400
Appendix C Berekening W4S350
Appendix D Berekening W4H350
Appendix E Berekening W4S400
Appendix F Berekening W4H400
Appendix G Berekening W4S450
Appendix H Berekening W4H450
Appendix I Berekening W6S400
Appendix J Berekening W6HL400
Appendix K Voorbeeld sondering
Appendix L Voorbeeld berekening fundering W2S400

1 INLEIDING

Dit document geeft een samenvatting van de ontwerpbelastingen en berekeningen van de funderingen gebaseerd op de hieronder genoemde betonnen en hybriden masttypen, geschikt voor de bouwaanvraag:

- steunmast geschikt voor twee-circuits, 2 x 380 kV, 400 meter veldlengte; type W2S400
- hoekmast geschikt voor twee-circuits, 2 x 380 kV, 400 meter veldlengte, lijnhoek van 130 graden, type W2HL400
- steunmast geschikt voor vier-circuits, 2 x 380 kV en 2x 150 kV, 350 meter veldlengte; type W4S350
- hoekmast geschikt voor vier-circuits, 2 x 380 kV en 2x 150 kV, 350 meter veldlengte, lijnhoek van 130 graden, type W4HL350
- steunmast geschikt voor vier-circuits, 2 x 380 kV en 2x 150 kV, 400 meter veldlengte; type W4S400
- hoekmast geschikt voor vier-circuits, 2 x 380 kV en 2x 150 kV, 400 meter veldlengte, lijnhoek van 130 graden, type W4HL400
- steunmast geschikt voor vier-circuits, 2 x 380 kV en 2x 150 kV, 450 meter veldlengte; type W4S450
- hoekmast geschikt voor vier-circuits, 2 x 380 kV en 2x 150 kV, 450 meter veldlengte, lijnhoek van 150 graden, type W4HK450
- steunmast geschikt voor vier-circuits, 4 x 380 kV, 400 meter veldlengte; type W6S400
- hoekmast geschikt voor vier-circuits, 4 x 380kV, 400 meter veldlengte, lijnhoek van 130 graden, type W6HL400.

De ontwerpbelastingen voor de betonnen Wintrack masten zijn gebaseerd op de DNV GL vergunningsdocumenten voor de stalen varianten.

Voor alle masttypes zijn de ontwerpbelastingen bepaald. De belastingen zijn zo opgesteld dat deze niet locatie specifiek worden bepaald maar generiek met maximale veldlengte en maximale lijnhoek, tussen opeenvolgende masten. Het effect op de belastingen door verschil in hoogte van opeenvolgende masten wordt niet meegenomen.

2 UITGANGSPUNTEN

De in dit document gepresenteerde belastingen zijn niet bepaald op basis van analyse van alle door NEN-EN 50341 voorgeschreven belastinggevallen maar door DNV GL zijn die belastinggevallen of combinaties daarvan geselecteerd die de maatgevende belastingen veroorzaken.

Voor steunmasten met een verhoging tot maximaal 10 meter geldt dat deze berekend worden voor een maximale lijnhoek van 2 x 2.5. Voor hoekmasten wordt er een onderscheid gemaakt in de maximaal toelaatbare hoek op de mast, kenbaar gemaakt met een codering in het masttype met K (150°), L (130°) en M (120°).

Overige uitgangspunten en aannames zijn:

- trekparameter bij 10 °C : 1800 m
- geleider 380 kV : 4 bundel AMS620
- geleider 150 kV : 2 bundel AMS620
- bliksemgeleider/OPGW : 1 bundel BRUGG OPGW 226-AL3/38-A20SA
- retour stroomgeleider : 2 bundel WDI AACSR 242-39 Hawk
- hoogte mast en ophangpunten conform de documenten: 12-00570 rapport "mastafmetingen 4 x 380 kV + 220-380 kV rev 3.0" en 12-00572 rapport "mastafmetingen 2x380+150-380 rev 3.0"
- belastingen zijn inclusief belastingfactor en volgens de NEN-EN 50341-3-15.

2.1 Gebruikte normen

- NEN - EN50341-1, "Bovengrondse elektrische lijnen boven 45 kV wisselspanning – Deel 1: Algemene eisen - Gemeenschappelijke specificaties
- NEN - EN50341-3-15, "Bovengrondse elektrische lijnen boven 45 kV wisselspanning - Deel 3: Verzameling van nationale normatieve aspecten"
- NEN-EN 1990:2002, "Eurocode - Grondslagen van het constructief ontwerp"
- NEN-EN 1992-1-1: Ontwerp en berekening Betonconstructies.

2.2 Materiaal typeringen mast

- Betonkwaliteit: C55/67, C70/85, C80/95 en C90/105
- wapening Fb550
- nagerekt voorspanstaal kwaliteit FeP1860 uitgaande van 150 mm2 per streng
- dekking 50 mm
- levensduur 50 jaar conform NEN-EN 50341
- milieuklasse: XC4, XD3, eventueel XF2 afhankelijk van de locaties
- materiaalfactor van 1,5 voor beton
- materiaalfactor van 1,5 voor voorgerekt en nagerekt staal
- materiaalfactor van 1,15 voor wapeningstaal.

2.3 Constructie typering

Veiligheidsklasse	3	1)	$\gamma_{f;g}$ =	1.20	$\gamma_{f;q}$ =	1.50
		2)	$\gamma_{f;g}$ =	1.35		
Referentie periode	50 jaar					
Windtracé	II		onbebouwd			
IJsgebied	B					

3 ONTWERP FUNDERINGFAMILIE

Het funderingontwerp is gebaseerd op een betonnen poer, samengesteld uit opstort en onderplaat, met een voorgespannen ingestort kooianker. Dit ontwerp is conform de funderingen voor de stalen masten.

Als alternatief voor de betonnen en hybride masten kan ook het funderingsontwerp gebaseerd op een "insertprincipe" worden voorgesteld. Hierbij wordt het onderste betonnen element met voetplaat in de betonnen funderingsplaat gestort. Hierbij is geen opstortpoer, maar enkel een onderplaat aanwezig.

De onderplaat zal eenzelfde diameter hebben als de onderplaat bij ingestorte kooianker principe. De dikte van de plaat zal tussen 1,5 en 2,5 meter liggen en de bovenzijde zal 0,3 meter boven het maaiveld liggen. Beide funderingsprincipes zijn weergegeven in figuur 1.

Aangezien bij deze masten de koppeling tussen mast en fundering, beton op beton is, kan dit een goed alternatief. Echter in dit document zijn alle funderingen gebaseerd op één en dezelfde funderingsontwerp en daarom zijn de "insert ring" varianten niet uitgewerkt.

Uitgangspunt voor het funderingsontwerp gebaseerd op een kooianker, is een smalle opstort van 1,8 meter hoogte waarvan 0,3 meter boven maaiveld. Op deze wijze is het grondbeslag minimaal maar is relatief veel ontgraving nodig door de diepe ligging van de grondplaat.

Dit hoofdstuk beschrijft het voorontwerp van de funderingsconstructies. Uitgangspunt is dat zowel de opstort als de onderplaat cirkelvormig is. Voor de opstort is dat om esthetische redenen. Gezien de verschillende richtingen van de maatgevende belastingen is een cirkelvormige onderplaat bij een hoekmast het meest optimaal. Indien de hart op hart afstand van de masten minder is dan 10 meter wordt er een rechthoekige onderplaat toegepast. Deze wordt in de bissectrice van de lijn geprojecteerd.

Uitgangspunt is dat betonkwaliteit C38/45 toegepast kan worden en dat naast het gebruikelijke wapeningsstaal geen splijtwapening nodig is. Om de druk op het beton binnen de toelaatbare grenzen te houden zonder toepassing van splijtwapening dient de mastvoetflens voldoende breedte te hebben.

3.1 Funderingsprincipe

Het funderingsprincipe is gebaseerd op een kooianker met een instortring en voorspanning op de bouten.

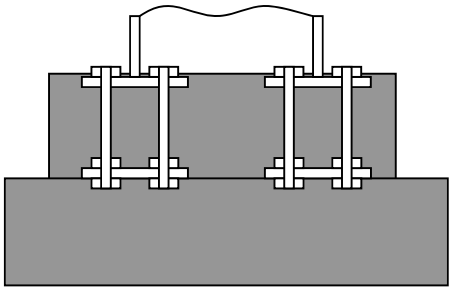

Figuur 1a Kooianker met instortring en voorspanning

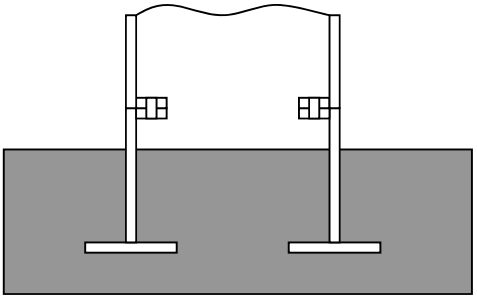

Figuur 1b Insert ring met voetplaat

Een betonfundering met voorgespannen kooianker wordt toegepast in de Wintrack masten te Bleiswijk en is voorzien voor de verbinding Randstad 380 Zuid. Door deze toepassingen is dit principe een bewezen technologie. Op basis van een door KEMA in 2011 gehouden beperkte marktconsultatie blijkt dat een betonfundering met voorgespannen kooianker technisch de voorkeur verdiend boven een ingestorte buis zoals wel bij windturbines wordt toegepast.

Het uitgangspunt is een betonnen fundering op palen met een kooianker als instortdeel. Het betondeel is opgebouwd uit een relatief smalle opstort met een brede onderplaat. In het standaard ontwerp heeft de opstort een hoogte van 1,8 meter waarvan 1,5 meter onder maaiveld, zoals weergegeven in tabel 1.

De hoogte van de funderingsopstort wordt bepaald aan de hand van de locatie, het gebruik van de naastgelegen grond en eventuele begrenzingen aan de ontgravingdiepte. In landbouwgebied wordt een opstort hoogte van 1,8 m aangehouden en voor gronden, zoals langs infrastructuur, die niet in gebruik zijn kan een lagere opstort aangehouden worden.

Tabel 1 Toepassing fundering

Hoogte van de opstort	Opstort	Gronddekking opstort meter boven maaiveld
[m]	[m]	[m]
1.8	1.5	0.3

3.2 Materialen

De materialen dienen minimaal te voldoen aan:

- kooi-ankers staalkwaliteit 8.8, bouttypes M42 en M48
- beton C38/45, milieuklasse XC4 en XF3, consistentieklasse 3
- ondersabeling met krimpvrije gietmortel, kwaliteit vergelijkbaar met C80 of beter
- prefab beton palen afmeting 400 x 400.

Voor zowel de opstort als de funderingplaat wordt betonkwaliteit C38/45 gehanteerd. Afmetingen van de mastvoetflens en de ankerbouten dienen zo gedimensioneerd te worden dat het aanbrengen van voorspanning niet tot een hogere betonkwaliteit leidt. Een reden dat toch betonkwaliteit C45/55 noodzakelijk kan zijn, is de hoge belasting uit de mast. Het betreft hier dan vooral de dwarskracht geïntroduceerd door het mastvoetmoment. Om deze reden dient de mastvoetdiameter niet kleiner te zijn dan de in dit rapport genoemde afmetingen. Dit geldt eveneens voor de hoogte van de onderplaat, indien de in het vervolg genoemde optimale afmetingen worden aangehouden is geen hogere betonkwaliteit nodig of aanvullende wapening.

Van betonkwaliteit C45/55 en hoger is de kwaliteit in het werk moeilijker te garanderen, om deze reden dient toepassing van betonkwaliteit C45/55 en hoger zoveel mogelijk vermeden te worden en bij voorkeur niet worden toegepast.

Een hogere betonkwaliteit, en extra wapening, voor de onderplaat is nodig indien de onderplaat dunner wordt gemaakt omdat er door bevoegd gezag beperkingen worden gesteld aan de ontgravingdiepte.

3.3 Overige uitgangspunten

De NW380 mastfunderingen voor speciale mastfunderingen dienen aan een aantal uitgangspunten te voldoen, waarvan de belangrijkste in onderstaande tabel worden samengevat. Uitgangspunt is dat de opstort cirkelvormig moet zijn. Voor de onderplaat is de keuze voor een rechthoekige of cirkelvorminge plaat. Per tower site kunnen de onderplaten gekoppeld worden.

Tabel 2 Uitgangspunten fundering

Onderwerp	Uitgangspunten / Aannames
Hoogte fundering boven maaiveld	Bovenkant fundering, met of zonder opstort, 0,3 meter boven maaiveld
Lengte ankerbouten	Minimaal 1,6 waarvan minimaal 1,3 meter ingestort in fundatie
Diameter opstort	Steunmast Ø diameter buis + 2 x 0.75 m, incl. remming van 0.75 m Hoekmast Ø diameter buis + 2 x 1.0 m, incl. remming van 1.0 m
Funderingplaat	Indien rond: Steunmast Ø 8 m tot Ø 10 m, alternatief 6 x 9 m tot 6 x 10 m Hoekmast Ø 12 tot Ø 15 m (± 10%) Indien rechthoekig: Steunmasten: 7 x 23.9 tot 10 x 32.5 m. Hoekmasten: 11 x 19 tot 13 x 37.5 m.
Bovenkant funderingplaat	1,5 meter onder maaiveld Alternatief 1: 0,5 meter onder maaiveld Alternatief 2: geen opstort, 0,3 meter boven maaiveld, afschot bovenplaat 1,5 tot 2%
Hoogte funderingplaat (normale afmetingen)	Conform principetekeningen
Ontgravingsdiepte (optimale afmetingen)	Ontgravingdiepte gelijk aan diepte ligging onderplaat, vermeerderd met 0,4 meter
Gelimiteerde ontgravingsdieptes	3 meter in de meeste provincies 2 meter, onder andere in de provincie Friesland
Ontgravingsoppervlak (maaiveldhoogte)	Oppervlakte van de ontgraving op maaiveldhoogte is gelijk aan: ∅ onderplaat + 2x diepteligging onderplaat + rondom 1 meter waarbij beide ontgravingen als een geheel worden uitgevoerd
Hoogte fundering boven maaiveld	Bovenkant fundering, met of zonder opstort, 0,3 meter boven maaiveld

Voor de ontgravingdiepte is 0,4 meter extra genomen ten behoeve van het zandbed en werkvloer.

3.4 Voorspanning

De ankerbouten worden zodanig voorgespannen dat bij een belasting uit mast en geleiders tot de Service Limit State (SLS) de voorspanning niet opgeheven wordt. De SLS belasting is in de ontwerpnorm NEN-EN 50341 gedefinieerd als de maximale belasting uit mast en geleiders zonder toepassing van een belastingsfactor.

De ankerbouten worden gedimensioneerd op de uiterste grenstoestand (ULS) trekbelasting als gedefinieerd in de ontwerpnorm. Deze is 1,5*SLS (of ULS).

De maximale betondruk op de bovenkant van de opstort is de optelsom van de druk door voorspanning, uitwendige belasting uit de mast en een reductie door de afname van voorspanning bij een uitwendige druk. De reductie op de voorspanning is 15%.

De maximale betondruk is gebaseerd op de belasting: 0,85*SLS + 1,5*SLS = 2,35 SLS (of 1,57*ULS). De maximale trekbelasting in de ankers blijft 1,5*SLS (of ULS).

De betondruk wordt gemaximeerd op 18,9 MPa, zodat geen splijtwapening nodig is.

3.5 Berekening onderplaat betonfundering

De onderplaat van de fundering wordt op het volledige buig- of kantelmoment uit de mast belast. De kosten van de onderplaat lopen onder de volgende omstandigheden sterk op:

- onder- en bovenwapening niet meer in prefab delen kan worden aangeleverd en door het hoge gewicht matig tot slecht hanteerbaar worden
- ponswapening nodig is.

Voor een kosteneffectieve fundering worden onder- en bovenwapening opgebouwd uit de volgende staven FeB500: Ø 20-100 of Ø 25-110. Dit type wapening is goed hanteerbaar en levert plaatdiktes waarbij geen splijtwapening nodig is en slechts een beperkte hoeveelheid ponswapening.

Met een omschrijving als Ø 20-100, wordt bedoeld wapeningstaal met een diameter van 20 mm en een tussenruimte van 100 mm.

Een minimale plaatdikte kan bereikt worden bij een wapening van Ø 32-120, deze is slecht hanteerbaar en wordt enkel in combinatie met splijtwapening en ponswapening toegepast.

Afmeting van de onderplaat dient conform de tekeningen uitgevoerd te worden.

3.6 Ondersteuning betonpoer

De funderingen worden ondersteund door palen. Afhankelijk van de bodemgesteldheid is de lengte van de palen tussen de 15 en 30 meter. De palen staan in schoorstand (1:8) naar buiten gericht. Het aantal palen is sterk verschillend bij steun- en hoekmasten. Voor het aantal benodigde palen wordt verwezen naar vergunningstekeningen. De palen worden gedimensioneerd op de maximaal optredende trekbelasting. De afmetingen van de funderingplaten zijn zodanig gekozen dat prefab betonpalen, vierkant 400 mm, voldoen. Voor de bepaling van de trekcapaciteit en de drukcapaciteit is sondering DKM-39 S01gehanteerd, deze is opgenomen in appendix K. De paallengte voor deze sondering is 27 meter, deze lengte is gebaseerd op een draagkrachtige laag met een conusweerstand van minimaal 12 MPa met een lengte van minimaal 3 meter. Voor de overige sonderingen dienen de paallengte door de aannemer bepaald te worden. De maximale capaciteiten voor druk- en trekwaarde zijn in onderstaande tabel weergegeven.

Tabel 3 – Druk- en trekcapaciteit

	400 x 400
Max. druk [kN]	1875
Max. trek [kN]	584

3.7 Fundering belastingen

De in tabel 4 gegeven optredende mastvoet momenten en verticaal belastingen dienen als input voor de berekening van het fundament. De constructieberekening van de mastfundering is weergegeven in de bijlagen conform onderstaande tabel. In appendix L wordt de fundering berekening in stappen verder uitgewerkt door middel van een voorbeeld.

Tabel 1 Overzicht optredende belastingen op fundering

Type mast	Gewicht pole	Moment mastvoet
	[kN]	[MNm]
W2S400	1667	14.2
W2HL400	2794	38.6
W4S350	1791	17.2
W4HL350	3267	49.6
W4S400	2862	22.7
W4HL400	3207	59.4
W4S450	3034	29.5
W4HK450	3655	56.7
W6S400	2282	22.4
W6HL400	3344	70.1

3.8 ZW380 fundering afmetingen

Voor alle genoemde Wintrack masten zijn de afmetingen van de funderingen vastgesteld. De gegeven waarden zijn per pylon. Er zijn per mastlocatie 2 pylonen voorzien, dit betekend dat er per mastlocatie 2 funderingen gemaakt dienen te worden, met uitzondering van de 2 circuit eind- en hoekmasten.

Tabel 5 Funderingsafmetingen en tekeningnummer

Type mast	Diameter opstort (m)	Diameter fundatieplaat (m)	Dikte fundatieplaat (m)	Aantal fundatie-palen
W2S400	3.7	8	1.0	8
W2HL400	4.8	19 x 11	1.2	40*
W4S350	3.7	7	1.1	12
W4HL350	5	11	1.3	16
W4S400	3.9	9	1.1	10
W4HL400	5.2	12	1.4	12
W4S450	4.3	10	1.2	12
W4HK450	5.3	12	1.4	16
W6S400	3.9	9	1.1	10
W6HL400	5.5	13	1.6	18

* Fundatie niet rond in verband met hart op hart afstand van de pylonen. Fundatie worden rechthoekig uitgevoerd. Aantal palen gelden voor 2 pylonen

APPENDIX A
Berekening W2S400

APPENDIX B
Berekening W2H400

APPENDIX C
Berekening W4S350

APPENDIX D
Berekening W4H350

APPENDIX E
Berekening W4S400

APPENDIX F
Berekening W4H400

APPENDIX G
Berekening W4S450

APPENDIX H
Berekening W4H450

APPENDIX I
Berekening W6S400

APPENDIX J
Berekening W6HL400

APPENDIX K
Voorbeeld sondering

APPENDIX L
Voorbeeld berekening fundering W2S400

Het fundament van mast W2S400 wordt als voorbeeld uitgewerkt. In onderstaande figuur is schematisch de fundering weergegeven. Het buigmoment op de fundering is voor mast W2S400 gelijk aan 13.253 kNm.

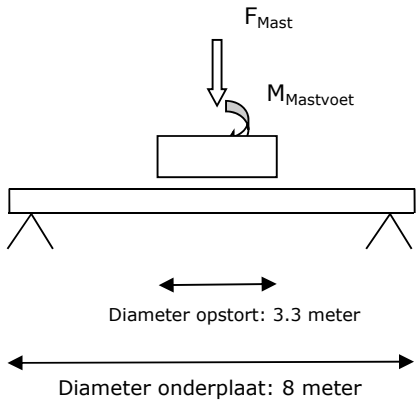

Eigen gewicht opstort
Afmetingen van de opstort:

Diameter: 3.7 meter

Hoogte: 1.8 meter

Eigen gewicht opstort: $1.8 * 0.25 * \pi * 3.7^2 * 19.6 = 379$ kN

Er wordt in de berekening van de fundering een conservatief eigen gewicht van beton gehanteerd van 2000 kg/m^3 = 19.6 kN/m^3.

Eigen gewicht onderplaat
Er wordt in de berekening van de fundering een conservatief eigen gewicht van beton gehanteerd van 2000 kg/m^3 = 19.6 kN/m^3.

Afmetingen van de onderplaat:

Diameter: 8.0 meter

Hoogte: 1.0 meter

Eigen gewicht onderplaat: $1.0 * 0.25 * \pi * 8.0^2 * 19.6 = 986$ kN

Optredende krachten
De optredende krachten zijn de maatgevende belastingen die optreden vanuit de mastvoet op de fundering. Hierin zijn alle belastingcombinaties meegenomen voor het bepalen van de maximale belastingen. Hierbij is rekening gehouden met bijvoorbeeld:

- belastingsfactoren van wind en eigen gewicht conform de NEN-EN 50341

- wind op de pyloon conform de NEN-EN 50341
- belastingen uit geleiders.

Moment

Voor het bepalen van de druk en trekkracht op de palen is het moment de meest bepalende factor.

Het funderingblok zelf geeft een moment tegengesteld aan het moment aan mastvoet. Het tegenwerkende moment is afhankelijk van het kantelpunt van de fundering. Voor opstort van de ZWW2S400 is deze als volgt bepaald.

$$M_{d;tegen} = 0.6 * \frac{(D_{onderplaat} - 2 * Randafstand)}{2} * e.g._{opstort}$$

$$M_{d;tegen} = 0.6 * \frac{(8.0 - 2 * 1)}{2} * 379$$

$$M_{d;tegen} = 682\ kNm$$

Het zwaartepunt van de palen is gesteld op 0.6 (zwaartepunt van een halve cirkel). Voor de onderplaat is eenzelfde berekening uitgevoerd wat een tegenwerkend moment oplevert van 1775 kNm. Hierbij is geen rekening gehouden met de opwaartse kracht van het water.

Er wordt als conservatief uitgangspunt genomen voor de trekbelasting dat het grondwater tot aan het maaiveld staat. Dit levert dan een reductie van 50% voor de opwaartse kracht van het water (eigen gewicht beton 2000 kg/m^3, eigen gewicht water = 1000 kg/m^3). Het totaal tegenwerkend moment wordt dan

$M_{d;tegen;tot} = 1775 - 682 = 1093 kNm$

Het resulterende moment is gelijk aan het optredende moment aan de mastvoet minus het tegenwerkende moment rekening houdende met de reductie door de opwaartse kracht van het water.

$$Md;tot \quad = 13253 - 1093 = 12160\ kNm$$

De optredende reactiekracht vanuit het moment op de palen is afhankelijk van de schoorstand van de palen en de hart op hart afstand van de palen, afstand a.

$F = \frac{M_{d;tot}}{a} = \frac{12160 kNm}{(8-2*1)} = 2027 kN$

Verticaal

Voor de bepaling van de reactiekracht op de palen is een conservatieve waarde aangehouden van alleen het eigen gewicht van de pyloon en het eigen gewicht van de fundering welke zich verdeeld over de 2 palen, aan beide zijden van de fundering.

$F = \frac{F_{mast} + F_{fund}}{2} = \frac{1667+1365}{2} = 1516 kN$

Maximale paalbelastingen

De maximale optredende drukbelasting op de palen is de sommatie van de optredende krachten uit de verticaalbelasting en het moment. $F_{druk,tot}$ = 1516 + 2027 = 3543 kN. De maximale optredende trekbelasting op de palen is de optredende kracht uit het moment minus de optredende reactie kracht van de verticaalbelasting en het moment. $F_{trek,tot}$ = 1516 - 2048 = 511 kN.

De paalschoorstand dient in rekening gebracht te worden. Er wordt vanuit gegaan dat er een paalschoorstand toegepast wordt van 8:1 (7.125 deg). Dit levert dan een optredende kracht op van

$$F_{druk;schoor} = \frac{F_{druk}}{\cos\propto} = \frac{3543}{\cos(7.125)} = 3571\text{kN}$$

$$F_{trek;schoor} = \frac{F_{trek}}{\cos\propto} = \frac{511}{\cos(7.125)} = 515\text{kN}$$

Het aantal palen is gebaseerd op de optredende belasting in de palen gedeeld door de maximale capaciteit van de palen zoals eerder bepaald.

$$Aantal\ palen\ druk = \frac{3543}{1875 * 0.6} = 3.2 = 4\ palen$$

$$Aantal\ palen\ trek = \frac{511}{584 * 0.6} = 1.5 = 2\ palen$$

Het aantal palen gecorrigeerd voor het feit dat het zwaartepunt van alle palen niet op de rand van de fundering ligt maar op ongeveer 0.6 van de rand (zwaartepunt halve cirkel). Het aantal palen is het maximum van de benodigde trek- of drukpalen. Het maximum geldt voor een zijde van de mast. Het totaal aantal palen is 2 x het maximum benodigde palen. Voor de ZWW2S400 is dat 8 palen verdeeld over de onderplaat.

About DNV GL

Driven by our purpose of safeguarding life, property and the environment, DNV GL enables organizations to advance the safety and sustainability of their business. We provide classification and technical assurance along with software and independent expert advisory services to the maritime, oil and gas, and energy industries. We also provide certification services to customers across a wide range of industries. Operating in more than 100 countries, our 16,000 professionals are dedicated to helping our customers make the world safer, smarter and greener.

Opdracht: 02P001595
Project: Geotechnisch onderzoek aanleg hsp masten trace Borsele-Tilburg

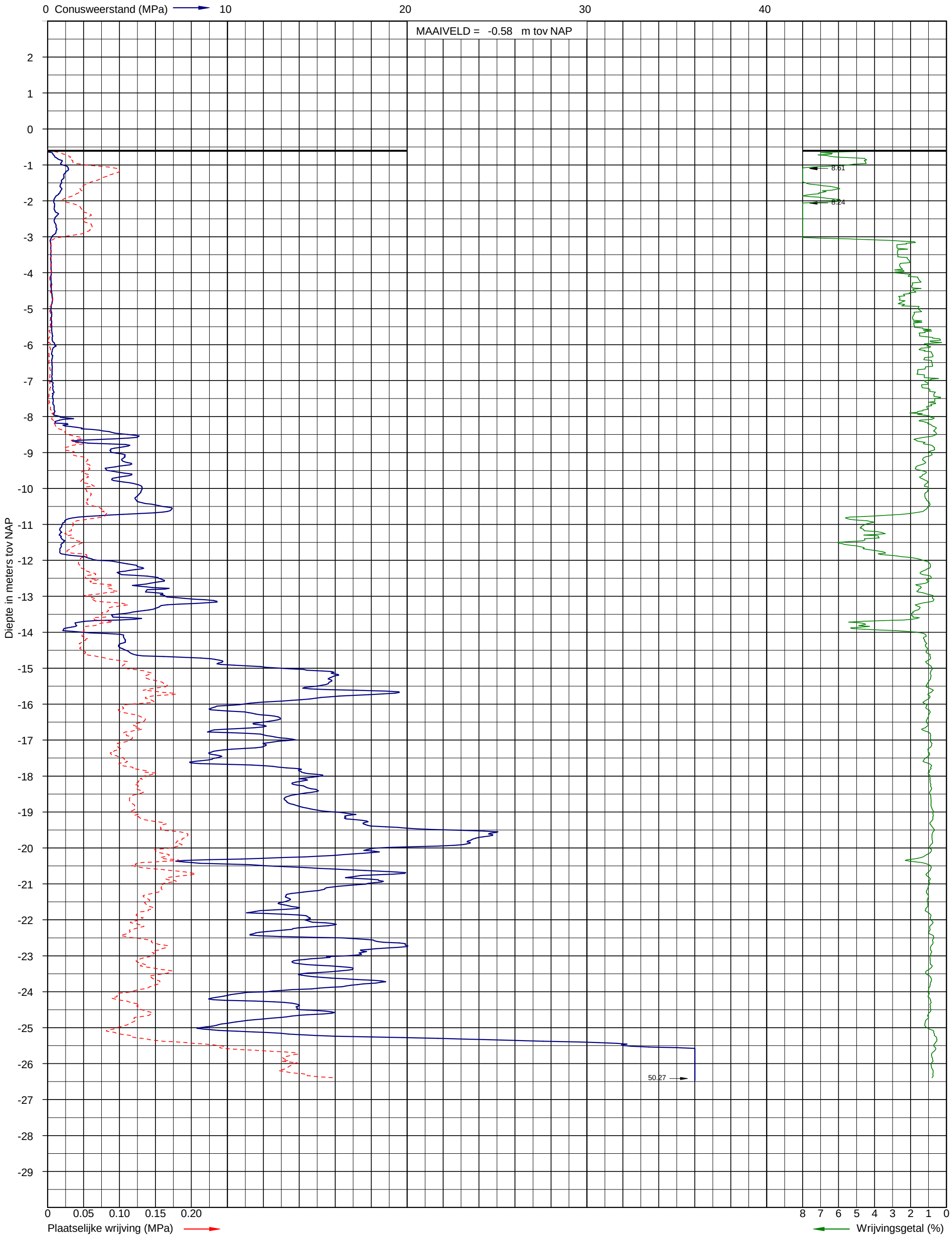

Sondering volgens NEN 5140 Klasse 2
Conusoppervlak 10 cm^2

Uitvoerder: mvo
Datum: 27-1-2012

X: 51207
Y: 388178

Pagina: 1/1

Sondering DKM-39.S01

W2HL400 Bijlage B

Fundatie berekening

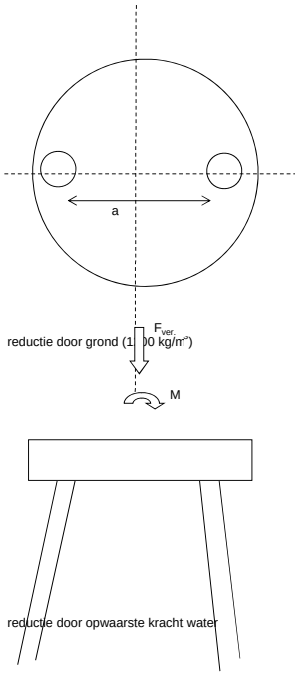

Fundatie ontwerp:
Heipaal

Afmetingen	b	400	mm	
	d	400	mm	
omtrek paal	$O_{p;gem}$	1.6	m	
schoorstand		8	:1	
a		7.125	graden	
Opstort	Diameter	4.6	m	
	Hoogte	1.8	m	
	Inhoud	29.9	m^3	
	e.g.	587	kN	
Onderplaat	Diameter	12.0	m	
	Hoogte	1.2	m	
	Inhoud	136	m^3	
	e.g.	2663	kN	reductie door grond (1200 kg/m³)
Paal afstand tov rand		1	m	

Optreden krachten

e.g. mast	2794	kN	
Maximale dwarskracht	969	kN	
Maximale verticaal krach	1196	kN	
Maximale moment	38576	kNm	

MOMENT:

Tegenmoment uit eigen gewicht:			
Opstort	1761	kNm	
Onderplaat	7988	kNm	
Totaal	4875	kNm	reductie door opwaarste kracht water
Moment:			
Totaal moment	33702	kNm	
F=M/a	3370	kN	
$F_{M;diag}$	3396	kN	
$F_{M;hor}$	421	kN	
$F_{M;ver}$	3370	kN	

Vertikaal:

F_{mast}	3353	kN	
F_{fund}	1625	kN	reductie door opwaarste kracht water
F_{grond}	1158	kN	reductie door grond (1200 kg/m³)
F_{totaal}	3068	kN	per zijde
$F_{M;diag}$	3092	kN	
$F_{M;hor}$	383	kN	
$F_{M;ver}$	3068	kN	

Maximale paalbelastingen:

Trekbelasting:		302	kN	
Drukbelasting:		6438	kN	
Aantal palen	trek	1	aantal	per zijde
	druk	6	aantal	per zijde
Totaal aantal	palen	12	per mastlocatie	

W2S400 Bijlage A

Fundatie berekening

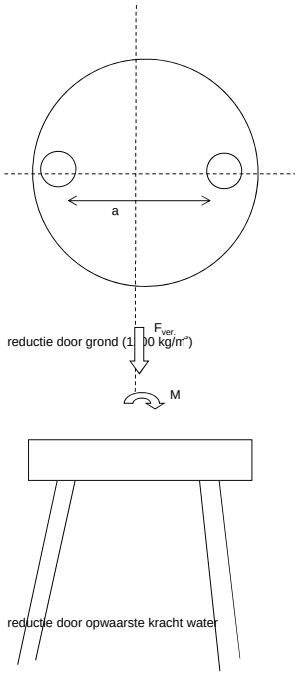

Fundatie ontwerp:
Heipaal

Afmetingen	b	400	mm	
	d	400	mm	
omtrek paal	$O_{p;gem}$	1.6	m	
schoorstand		8	:1	
a		7.125	graden	
Opstort	Diameter	3.3	m	
	Hoogte	1.8	m	
	Inhoud	15.4	m^3	
	e.g.	302	kN	
Onderplaat	Diameter	8.0	m	
	Hoogte	1.0	m	
	Inhoud	50	m^3	
	e.g.	986	kN	reductie door grond (1200 kg/m³)
Paal afstand tov rand		1	m	

Optreden krachten

e.g. mast	1667	kN	
Maximale dwarskracht	370	kN	
Maximale verticaal krach	714	kN	
Maximale moment	14253	kNm	

MOMENT:

Tegenmoment uit eigen gewicht:			
Opstort	544	kNm	
Onderplaat	1775	kNm	
Totaal	1159	kNm	reductie door opwaarste kracht water
Moment:			
Totaal moment	13094	kNm	
F=M/a	2182	kN	
$F_{M;diag}$	2199	kN	
$F_{M;hor}$	273	kN	
$F_{M;ver}$	2182	kN	

Vertikaal:

F_{mast}	2000	kN	
F_{fund}	644	kN	reductie door opwaarste kracht water
F_{grond}	501	kN	reductie door grond (1200 kg/m³)
F_{totaal}	1572	kN	per zijde
$F_{M;diag}$	1585	kN	
$F_{M;hor}$	197	kN	
$F_{M;ver}$	1572	kN	

Maximale paalbelastingen:

Trekbelasting:		610	kN	
Drukbelasting:		3755	kN	
Aantal palen	trek	2	aantal	per zijde
	druk	4	aantal	per zijde
Totaal aantal	palen	8	per mastlocatie	

W4HK450 Bijlage H

Fundatie berekening

Fundatie ontwerp:
Heipaal

Afmetingen	b	400	mm
	d	400	mm
omtrek paal	$O_{p;gem}$	1.6	m
schoorstand		8	:1
a		7.125	graden
Opstort	Diameter	5.3	m
	Hoogte	1.8	m
	Inhoud	39.7	m^3
	e.g.	779	kN
Onderplaat	Diameter	12.0	m
	Hoogte	1.4	m
	Inhoud	158	m^3
	e.g.	3107	kN
Paal afstand tov rand		1	m

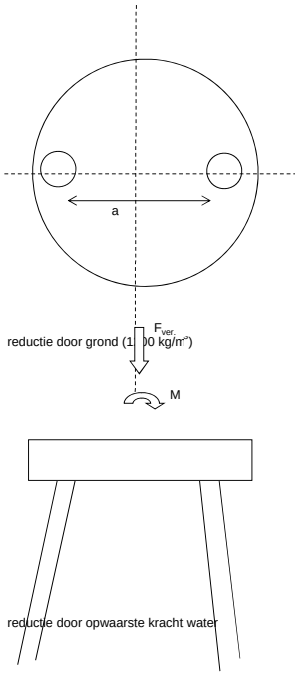

reductie door grond (1200 kg/m³)

Optreden krachten

e.g. mast	3655	kN
Maximale dwarskracht	1152	kN
Maximale verticaal krach	1248	kN
Maximale moment	56744	kNm

MOMENT:

Tegenmoment uit eigen gewicht:		
Opstort	2337	kNm
Onderplaat	9320	kNm
Totaal	5829	kNm

reductie door opwaarste kracht water

Moment:		
Totaal moment	50915	kNm
F=M/a	5092	kN
$F_{M;diag}$	5131	kN
$F_{M;hor}$	636	kN
$F_{M;ver}$	5092	kN

Vertikaal:

F_{mast}	4386	kN	
F_{fund}	1943	kN	reductie door opwaarste kracht water
F_{grond}	1092	kN	reductie door grond (1200 kg/m³)
F_{totaal}	3711	kN	per zijde
$F_{M;diag}$	3740	kN	
$F_{M;hor}$	464	kN	
$F_{M;ver}$	3711	kN	

Maximale paalbelastingen:

Trekbelasting:		1381	kN	
Drukbelasting:		8802	kN	
Aantal palen	trek	4	aantal	per zijde
	druk	8	aantal	per zijde
Totaal aantal	palen	16	per mastlocatie	

W4HL400 Bijlage F

Fundatie berekening

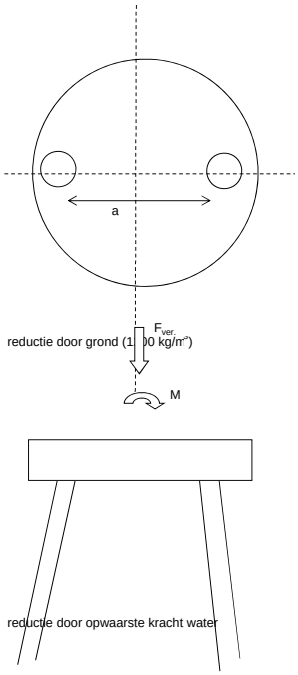

Fundatie ontwerp:
Heipaal

Afmetingen	b	400	mm
	d	400	mm
omtrek paal	$O_{p;gem}$	1.6	m
schoorstand		8	:1
a		7.125	graden
Opstort	Diameter	5.2	m
	Hoogte	1.8	m
	Inhoud	38.2	m^3
	e.g.	750	kN
Onderplaat	Diameter	12.0	m
	Hoogte	1.4	m
	Inhoud	158	m^3
	e.g.	3107	kN

reductie door grond (1200 kg/m³)

Paal afstand tov rand	1	m

Optreden krachten

e.g. mast	3849	kN
Maximale dwarskracht	1326	kN
Maximale verticaal krach	1407	kN
Maximale moment	59387	kNm

MOMENT:

Tegenmoment uit eigen gewicht:

Opstort	2250	kNm
Onderplaat	9320	kNm
Totaal	5785	kNm

reductie door opwaarste kracht water

Moment:

Totaal moment	53602	kNm
F=M/a	5360	kN
$F_{M;diag}$	5402	kN
$F_{M;hor}$	670	kN
$F_{M;ver}$	5360	kN

Vertikaal:

F_{mast}	3849	kN	
F_{fund}	1928	kN	reductie door opwaarste kracht water
F_{grond}	1102	kN	reductie door grond (1200 kg/m³)
F_{totaal}	3440	kN	per zijde
$F_{M;diag}$	3466	kN	
$F_{M;hor}$	430	kN	
$F_{M;ver}$	3440	kN	

Maximale paalbelastingen:

Trekbelasting:		1921	kN	
Drukbelasting:		8800	kN	
Aantal palen	trek	6	aantal	per zijde
	druk	8	aantal	per zijde
Totaal aantal	palen	12	per mastlocatie	

W4S400 Bijlage E

Fundatie berekening

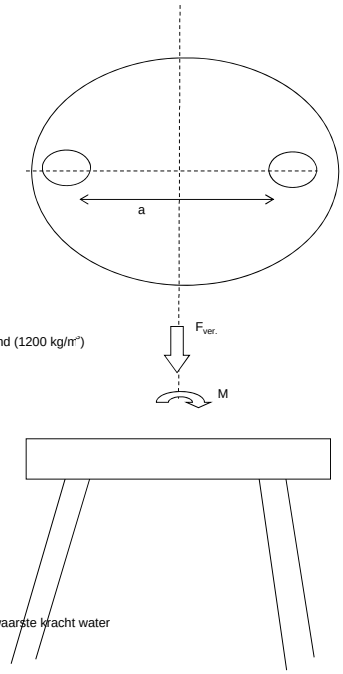

Fundatie ontwerp:
Heipaal

Afmetingen	b	400	mm	
	d	400	mm	
omtrek paal	$O_{p;gem}$	1.6	m	
schoorstand		8	:1	
a		7.125	graden	
Opstort	Diameter	3.9	m	
	Hoogte	1.8	m	
	Inhoud	21.5	m^3	
	e.g.	422	kN	
Onderplaat	Diameter	9.0	m	
	Hoogte	1.1	m	
	Inhoud	70	m^3	
	e.g.	1373	kN	reductie door grond (1200 kg/m^2)
Paal afstand tov rand		1	m	

Optreden krachten

e.g. mast	2862	kN	
Maximale dwarskracht	527	kN	
Maximale verticaal krach	1165	kN	
Maximale moment	22666	kNm	

MOMENT:

Tegenmoment uit eigen gewicht:			
Opstort	886	kNm	
Onderplaat	2883	kNm	
Totaal	1885	kNm	reductie door opwaarste kracht water
Moment:			
Totaal moment	20781	kNm	
F=M/a	2969	kN	
$F_{M;diag}$	2992	kN	
$F_{M;hor}$	371	kN	
$F_{M;ver}$	2969	kN	

Vertikaal:

F_{mast}	2862	kN	
F_{fund}	897	kN	reductie door opwaarste kracht water
F_{grond}	620	kN	reductie door grond (1200 kg/m^2)
F_{totaal}	2189	kN	per zijde
$F_{M;diag}$	2207	kN	
$F_{M;hor}$	274	kN	
$F_{M;ver}$	2189	kN	

Maximale paalbelastingen:

Trekbelasting:		779	kN	
Drukbelasting:		5158	kN	
Aantal palen	trek	3	aantal	per zijde
	druk	5	aantal	per zijde
Totaal aantal	palen	10	per mastlocatie	

W4S450 Bijlage G

Fundatie berekening

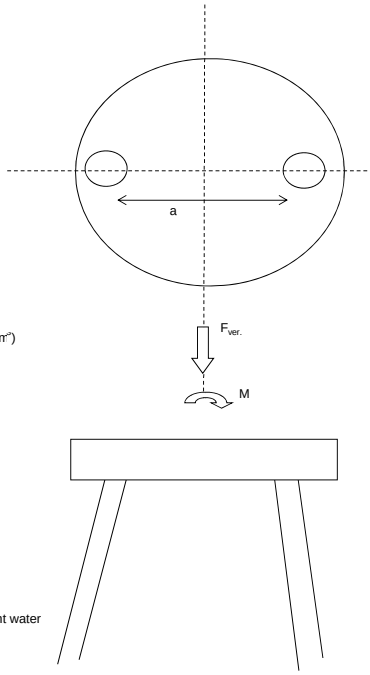

Fundatie ontwerp:
Heipaal

Afmetingen	b	400	mm	
	d	400	mm	
omtrek paal	$O_{p;gem}$	1.6	m	
schoorstand		8	:1	
a		7.125	graden	
Opstort	Diameter	4.3	m	
	Hoogte	1.8	m	
	Inhoud	26.1	m^3	
	e.g.	513	kN	
Onderplaat	Diameter	10.0	m	
	Hoogte	1.2	m	
	Inhoud	94	m^3	
	e.g.	1849	kN	reductie door grond (1200 kg/m^2)
Paal afstand tov rand		1	m	

Optreden krachten

e.g. mast	3043	kN	
Maximale dwarskracht	612	kN	
Maximale verticaal krach	1123	kN	
Maximale moment	29468	kNm	

MOMENT:

Tegenmoment uit eigen gewicht:			
Opstort	1231	kNm	
Onderplaat	4438	kNm	
Totaal	2834	kNm	reductie door opwaarste kracht water
Moment:			
Totaal moment	26634	kNm	
F=M/a	3329	kN	
$F_{M;diag}$	3355	kN	
$F_{M;hor}$	416	kN	
$F_{M;ver}$	3329	kN	

Vertikaal:

F_{mast}	3651	kN	
F_{fund}	1181	kN	reductie door opwaarste kracht water
F_{grond}	768	kN	reductie door grond (1200 kg/m^2)
F_{totaal}	2800	kN	per zijde
$F_{M;diag}$	2822	kN	
$F_{M;hor}$	350	kN	
$F_{M;ver}$	2800	kN	

Maximale paalbelastingen:

Trekbelasting:		529	kN	
Drukbelasting:		6129	kN	
Aantal palen	trek	2	aantal	per zijde
	druk	6	aantal	per zijde
Totaal aantal	palen	12	per mastlocatie	

W6HL400 Bijlage J

Fundatie berekening

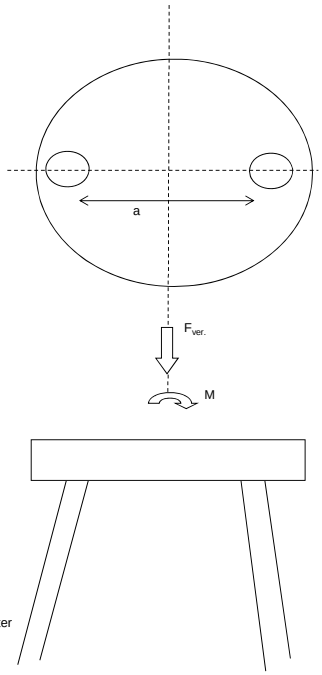

Fundatie ontwerp:
Heipaal

Afmetingen	b	400	mm	
	d	400	mm	
omtrek paal	$O_{p;gem}$	1.6	m	
schoorstand		8	:1	
a		7.125	graden	
Opstort	Diameter	5.5	m	
	Hoogte	1.8	m	
	Inhoud	42.8	m^3	
	e.g.	839	kN	
Onderplaat	Diameter	13.0	m	
	Hoogte	1.6	m	
	Inhoud	212	m^3	
	e.g.	4167	kN	reductie door grond (1200 kg/m³)
Paal afstand tov rand		1	m	

Optreden krachten

e.g. mast	3344	kN	
Maximale dwarskracht	1677	kN	
Maximale verticaal krach	1506	kN	
Maximale moment	70130	kNm	

MOMENT:

Tegenmoment uit eigen gewicht:			
Opstort	2769	kNm	
Onderplaat	13750	kNm	
Totaal	8260	kNm	reductie door opwaarste kracht water
Moment:			
Totaal moment	61871	kNm	
F=M/a	5625	kN	
$F_{M;diag}$	5668	kN	
$F_{M;hor}$	703	kN	
$F_{M;ver}$	5625	kN	

Vertikaal:

F_{mast}	4013	kN	
F_{fund}	2503	kN	reductie door opwaarste kracht water
F_{grond}	1308	kN	reductie door grond (1200 kg/m³)
F_{totaal}	3912	kN	per zijde
$F_{M;diag}$	3942	kN	
$F_{M;hor}$	489	kN	
$F_{M;ver}$	3912	kN	

Maximale paalbelastingen:

Trekbelasting:		1713	kN	
Drukbelasting:		9537	kN	
Aantal palen	trek	5	aantal	per zijde
	druk	9	aantal	per zijde
Totaal aantal	palen	18	per mastlocatie	

W6S400 Bijlage I

Fundatie berekening

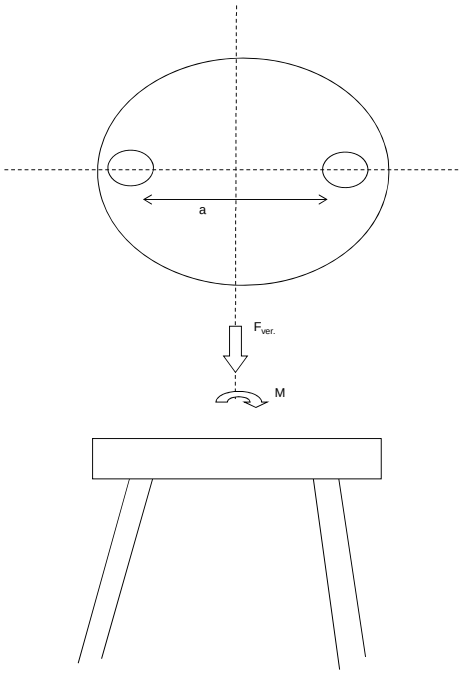

Fundatie ontwerp:
Heipaal

Afmetingen	b	400	mm	
	d	400	mm	
omtrek paal	$O_{p;gem}$	1.6	m	
schoorstand		8	:1	
a		7.125	graden	
Opstort	Diameter	3.9	m	
	Hoogte	1.8	m	
	Inhoud	21.5	m^3	
	e.g.	422	kN	
Onderplaat	Diameter	9.0	m	
	Hoogte	1.1	m	
	Inhoud	70	m^3	
	e.g.	1373	kN	reductie door grond (1200 kg/m³)
Paal afstand tov rand		1	m	

Optreden krachten

e.g. mast	2282	kN	
Maximale dwarskracht	542	kN	
Maximale verticaal krach	1053	kN	
Maximale moment	22358	kNm	

MOMENT:

Tegenmoment uit eigen gewicht:			
Opstort	886	kNm	
Onderplaat	2883	kNm	
Totaal	1885	kNm	reductie door opwaarste kracht water
Moment:			
Totaal moment	20474	kNm	
F=M/a	2925	kN	
$F_{M;diag}$	2948	kN	
$F_{M;hor}$	366	kN	
$F_{M;ver}$	2925	kN	

Vertikaal:

F_{mast}	2738	kN	
F_{fund}	897	kN	reductie door opwaarste kracht water
F_{grond}	620	kN	reductie door grond (1200 kg/m³)
F_{totaal}	2128	kN	per zijde
$F_{M;diag}$	2144	kN	
$F_{M;hor}$	266	kN	
$F_{M;ver}$	2128	kN	

Maximale paalbelastingen:

Trekbelasting:		797	kN	
Drukbelasting:		5053	kN	
Aantal palen	trek	3	aantal	per zijde
	druk	5	aantal	per zijde
Totaal aantal	palen	10	per mastlocatie	

Bijlage 7

Aansluitgegevens Station Kruiningen

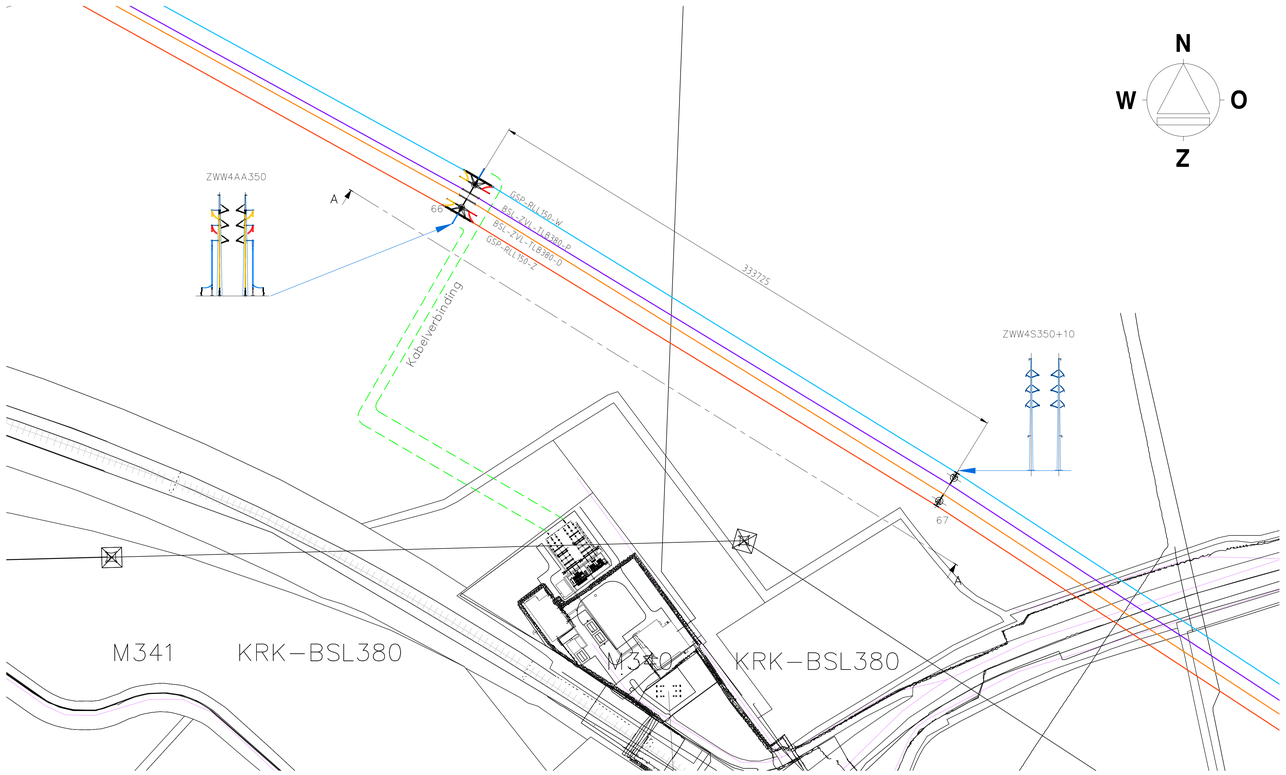

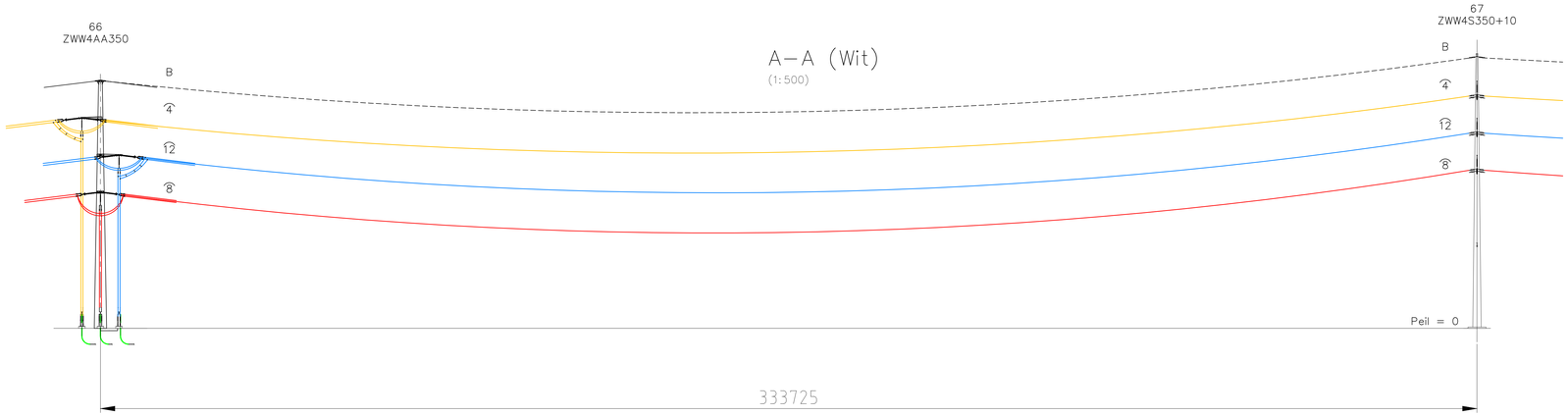

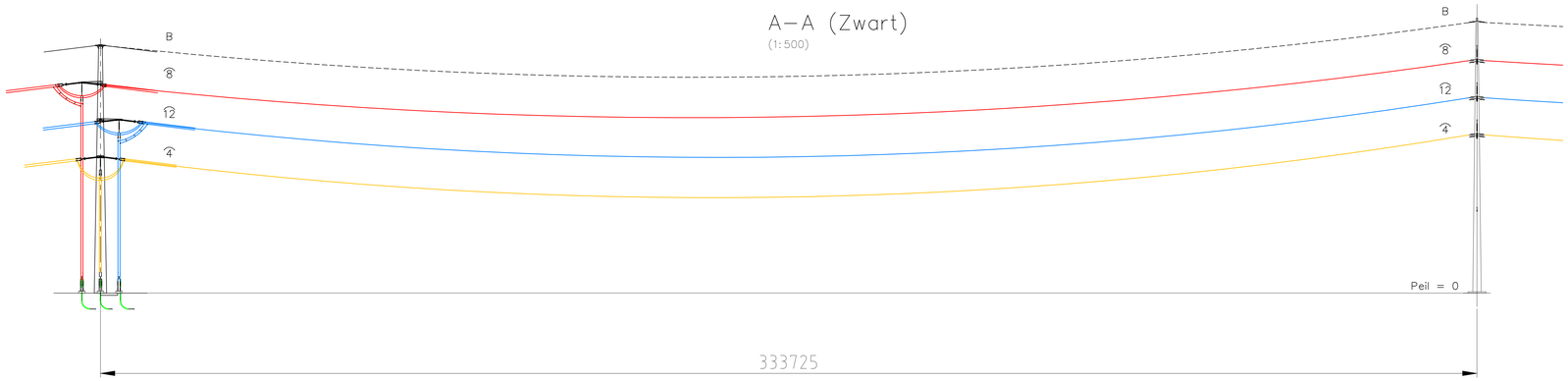

150kV Opstijgpunt Kruiningen	C			
	B			
	A			
Omschrijving	Rev.	Wijziging	Datum	Naam
ZW380	Schaal:		Formaat: A0	
Project: Basisontwerp deeltracé 2	Naam: A Kieboom		Datum: 19-09-2011	

TenneT Taking power further

Tekeningnummer: GSP-RLL150-00-31-0002 Stad 001

AutoCAD filename: Sycher:

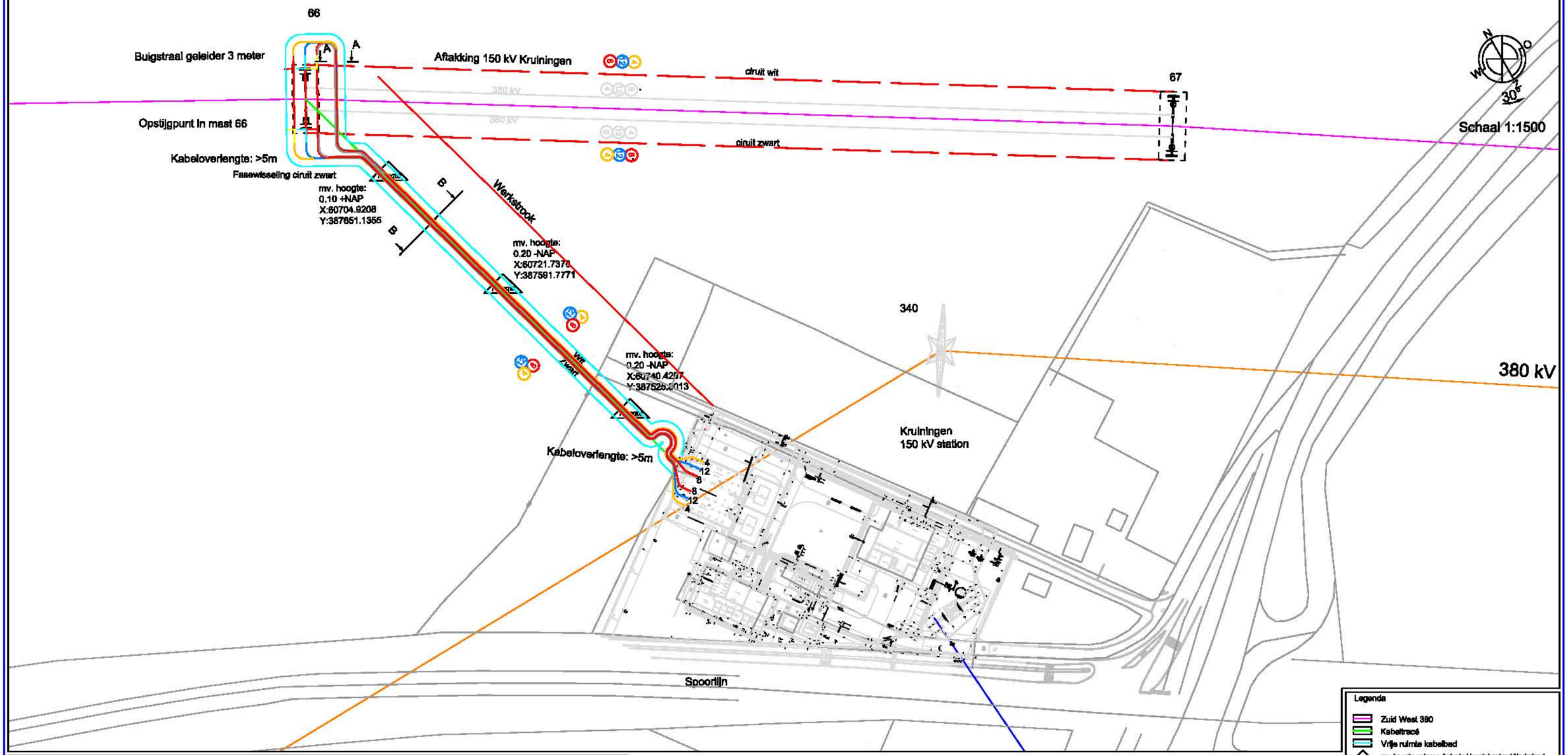

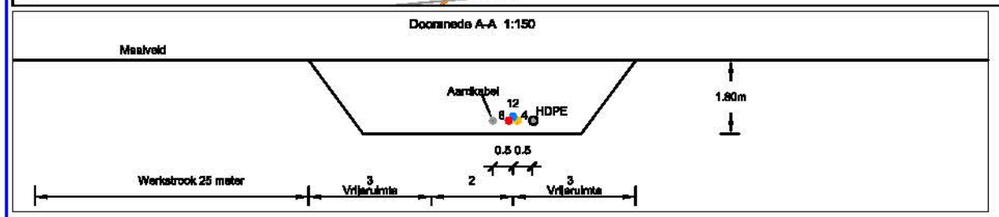

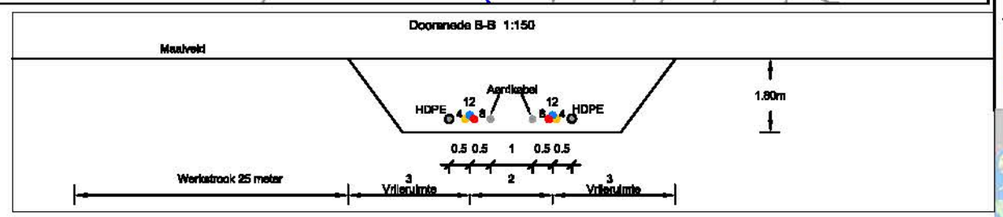

Legenda

- Zuid West 380
- Kabeltracé
- Vrije ruimte kabelbed
- mv. hoogte volgens Actuele Hoogtebestand Nederland

Bestaande verbinding

- 380 kV Lijn Eindhoven- Borssele
- 150 kV Lijn Kruiningen- Willem annapolder

WIJZ	OMSCHRIJVING	DATUM	OPGST.	BEOORD.	GGK.
C	Kabeltracé aangepast aan de wijziging VKA	15-10-2012	MP	ARo	ARo
B	Aardkabel toegevoegd	23-08-2012	MP	AR	AR
A	Wijziging tracé	16-08-2012	MP	AR	AR
PROJECT DIR:\Werk\TenneT\TE113900-ZW-380\Tekeningen		09-08-2012	MP	ARo	ARo

Petersburg Consultants B.V.

PROJECT: TE113900

TEK.NR.Petersburg: TE113900-D2-T09

SCHAAL: Zie tek. | EENHEID: m

Zuid West 380 kV

Tracé tekening deeltracé 2

Tracé tekening Kruiningen

A3 | TEK.NR. - | BLADNR. 1/1 | WIJZ. C

+ | =

© 2012 Petersburg Consultants B.V.

Zuid • West 380kV - West Opstijgpunt Kruiningen

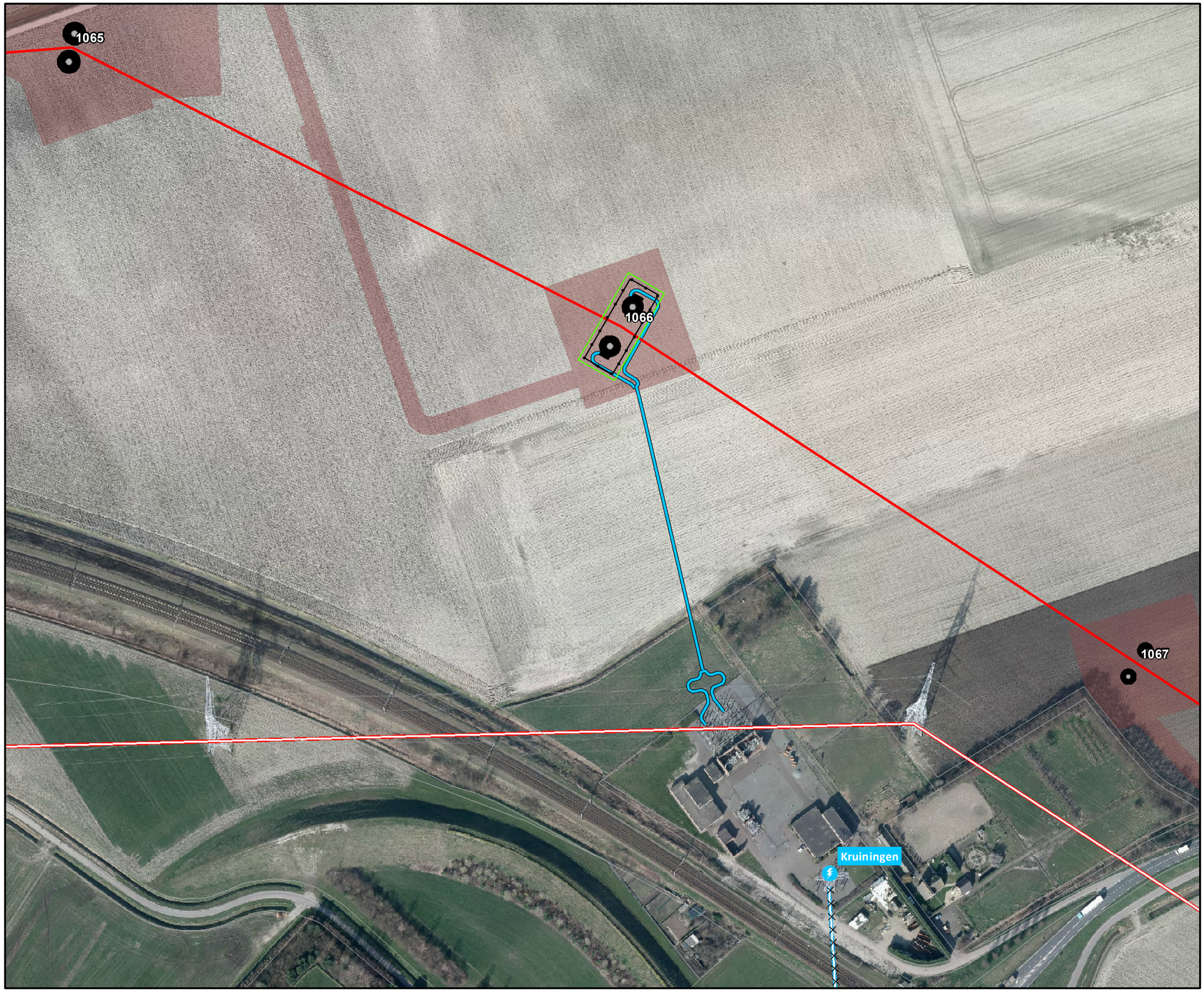

Legenda

- Pyloon
- Fundatie
- Hekwerk
- Op-/Afstappunt
- Hartlijn VKA 2.0
- Kabel 150kV open ontgraving
- Werkwegen / Werkterreinen
- 150kV station
- Bestaande 380kV verbinding
- Bestaande 150kV verbinding
- Te amoveren verbinding
- Kadastrale percelen

Zuid • West 380 kV OSP - Kruiningen

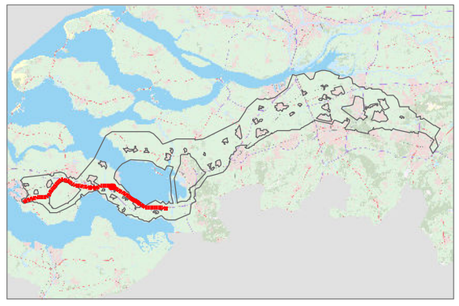

Revisiedatum	-	**Formaat**	A3
Aanmaakdatum	11-02-2015	**Schaal**	1:2.000
Versie	Concept	**Blad**	1 van 1

Kenmerk
A:\p_zw380\producten\ZW380-West\Vergunningen\150211_osp_kruiningen\150211p_zw380-w_OSP_kruiningen.mxd

0 20 40 60 80 100 m

N

Aan deze tekening kunnen geen rechten worden ontleend. © TenneT TSO B.V.

Bijlage 8

Constructieve veiligheid

DNV·GL

ENGINEERING ZW380

Basisnota constructieve veiligheid

TenneT

Document nr.: 14-3185 versie 2.0

Datum: 02-12-2014

Projectnaam:	Engineering ZW380	DNV GL - Energy
Rapport titel:	Basisnota constructieve veiligheid	KEMA Nederland B.V.
Klant:	TenneT,	Postbus 9035
Contactpersoon:	Henrie Sanders	6800 ET ARNHEM
Datum:	02-12-2014	
Project nr.:	74102194	
Unit:	PMT-POL	Tel: +31 26 356 9111
Document nr.:	14-3185 versie 2.0	KvK 09080262

Taak en doelstelling: Toelichting op vergunningsaanvraag tracé Borsele - Rilland

Auteur:	Beoordeeld:	Goedgekeurd:
Thijmen Jansen	Erwin Platenkamp	Ton van der Wekken

BELANGRIJKE MEDEDELING EN DISCLAIMER

Dit document is auteursrechtelijk beschermd en mag alleen aan derden beschikbaar worden gesteld in zijn geheel en voorzien van deze mededeling en disclaimer. Dit document noch een gedeelte ervan mag openbaar worden gemaakt in het kader van een openbare aanbieding of prospectus dan wel een beursnotering of een circulaire of mededeling op de beurs, zonder de uitdrukkelijke voorafgaande schriftelijke toestemming van de DNV GL entiteit die dit document heeft opgesteld ("DNV GL").

Indien en voor zover de wet dat toelaat, is noch DNV GL noch enige groepsmaatschappij ("de Groep") verantwoordelijk op grond van een contract, onrechtmatige daad, nalatigheid daarbij inbegrepen, of op enige andere wijze, jegens derden (daarvan uitgezonderd de Klant). Geen van de Groep deel uitmakende entiteit is aansprakelijk voor enig verlies of schade hoe dan ook geleden als gevolg van enig handelen, nalaten of verzuim (ontstaan door onachtzaamheid of anderszins) door DNV GL, de Groep or diens medewerkers, onderaannemers dan wel agenten. De inhoud van dit document vormt één geheel met de aannames en voorbehouden die daarin zijn opgenomen dan wel in hetzelfde verband anderszins zijn gecommuniceerd. Dit document bevat mogelijk technische detailinformatie die uitsluitend bedoeld is voor personen met de relevante expertise.

Dit document is samengesteld op basis van informatie beschikbaar ten tijde van het opstellen ervan. Het is niet uitgesloten dat dergelijke informatie daarna verandert of is veranderd. Behalve indien en voor zover een opdracht tot het verifiëren van informatie en gegevens uitdrukkelijk met de Klant is overeengekomen, is DNV GL op geen enkele wijze verantwoordelijk in verband met onjuiste informatie of gegevens die zij van haar Klant of een derde heeft ontvangen, dan wel voor de gevolgen van dergelijke onjuiste informatie of gegevens, die al dan niet in dit document is opgenomen of waarnaar in dit document wordt verwezen.

Reference to part of this report which may lead to misinterpretation is not permissible.

Rev.	Datum	Reden voor uitgave	Auteur	Beoordeeld	Goedgekeurd
2.0	02-12-2014	Tweede uitgave			
1.0		Eeerste uitgave.			

Inhoud

1 INLEIDING 1

2 ALGEMENE UITGANGSPUNTEN 1
2.1 PVE en normen 1
2.2 Wintrack 2

3 BELASTINGEN 4
3.1 Ontwerplevensduur en belastingfactor 4
3.2 Belastingen en norm 4

4 VERVORMINGSEISEN 7

5 MAATGEVENDE BELASTINGSGEVALLEN 8

6 KEUZE VOOR MASTMATERIAAL 9
6.1 Beton 9
6.2 Staal 9
6.3 Hybride 9

1 INLEIDING

Dit document is opgesteld om een toelichting te geven op de constructieve mast- en funderingsberekeningen die uitgevoerd zijn door DNV-GL en die betrekking hebben op de vergunningsaanvraag van een nieuwe 380 kV hoogspanningsverbinding tussen de hoogspanning stations Borsele en Rilland, het ZW380 project.
De vergunning wordt aangevraagd door TenneT TSO. In plaats van de stalen vakwerkmasten zal het nieuwe Wintrack mastontwerp worden toegepast. Per mastlocatie worden twee slanke en taps toelopende cilindrische buismasten toegepast, het Wintrack concept.
De materiaal onafhankelijke vergunning zoals aangevraagd door TenneT bij de gemeentes Borssele, Kapelle en Reimerswaal omschrijft de eisen en de berekeningsmethoden van de nieuw te bouwen Wintrack masten. Er zijn door DNV-GL drie vergunningsdocumenten opgesteld waarin zes Wintrack masttypen zijn doorgerekend. De drie documenten bevatten de volgende zaken:

- Vergunningsdocument waarin de zes masttypen uit staal gefabriceerd zullen worden
- Vergunningsdocument waarin de zes masttypen uit beton gefabriceerd zullen worden
- Vergunningsdocument waarin de zes masttypen uit een hybride constructie zullen bestaan, waarbij het onderstuk uit beton is opgebouwd en het bovenstuk uit staal.

Dit document is als toelichting op de vergunningsdocumenten bedoeld waarbij de hoogspanningslijn specifieke zaken worden omschreven.

2 ALGEMENE UITGANGSPUNTEN

2.1 PVE en normen

De Wintrackmasten die opgenomen zijn in vergunningsdocumenten voldoen aan de eisen komende uit het Programma van Eisen (PvE) van TenneT en aan de in Nederland en Europa geldende normen voor elektrische veiligheid en constructieve integriteit.

De eisen komende uit het PvE van TenneT zijn vooral technische en omgevingseisen waaraan de hoogspanningslijn moet voldoen. Hierbij zijn eisen gesteld aan de kwaliteit van het elektrisch vermogen dat getransporteerd moet kunnen worden, de systeemspanning, veiligheidsafstanden en omgevingseisen met betrekking tot toelaatbaar magneetveldniveau, elektrische veldsterkte en geluidsproductie. Deze eisen bepalen de geleiderbundel posities, afstand tussen de fasebundels, aarddraden en de circuits. Architect Zwarts & Jansma heeft het beeldkwaliteitsplan opgesteld waarin de esthetische eisen aan de mast worden ingekaderd.

Naast de eisen die door TenneT zijn gespecificeerd voldoet de hoogspanningslijn ook aan de geldende normen die hiervoor van toepassing zijn. Naast de Eurocodes, waarin de eisen voor constructieve integriteit zijn gesteld, is er een Europese, aangevuld met specifieke Nederlandse eisen, norm voor hoogspanningslijnen. Deze norm beschrijft, ook voor deze specifieke vergunningsaanvraag, hoe de belastingen op de mast bepaald worden. Hierin zijn onder andere het betrouwbaarheidsniveau met bijbehorende veiligheidsfactoren en de berekeningsmethoden voor wind-, ijs-, temperatuur- en tijdelijke belastingen opgenomen. In de volgende hoofdstukken wordt nader uitgelegd wat dit betekent voor het ontwerp en de belastingen.

De huidige norm, NEN-EN 50341-1 voor hoogspanningslijnen, is de opvolger van de oude norm NEN 1060. Een verschil met de nieuwe norm is dat de extreme windsnelheid is toegenomen. Nederland heeft als aanvulling op de huidige NEN-EN norm een nationale annex waarin afwijkingen op de Europese norm worden aangegeven. Deze heeft vooral betrekking op de wind- en ijsbelastingen en de hiervoor te hanteren belastingfactoren.

Eveneens worden er eisen gesteld aan lijndansen. Lijndansen kan optreden rond de 0 °C in combinatie met ijsvorming rond de geleiders en wind. Resonantie van de geleider met ijslaag, met hoge verplaatsingen en belastingen tot gevolg, ontstaat door koppeling van de verticale trillingsmode en de torsiemode. De norm geeft aan wat de minimale afstand tussen de fasegeleiders moet zijn om bij lijndansen geen kortsluiting te veroorzaken. De dynamische belastingen bij lijndansen zijn niet gespecificeerd maar zijn normaliter lager dan de statische ontwerpbelastingen. In geval van extreem ijsdansen kan (lokaal) blijvende vervorming optreden.

2.2 Wintrack

Het nieuwe ZW380 tracé gaat bestaan uit Wintrack masten. Dit tracé wordt opgebouwd uit een groot aantal standaard masttypen met elk een unieke codering. Aan deze codering is af te leiden voor welke veldlengte de mast ontworpen is, de maximale lijnhoek, het aantal circuits met bijbehorende voltages en of de mast een eventuele verhoging heeft op het standaard ontwerp.

De benaming van de Wintrack masten is als volgt opgebouwd:

Tracé	Aantal pylonen	Circuit	Type mast	Veldlengte	Verhoging
(ZW)	(X)	(X)	(X)	(XXX)	(x)

Tracé benaming
ZW = Zuid-West 380 kV, deze aanduiding wordt op de tekeningen gebruikt.

Aantal pylonen
Het betreft de volgende aanduidingen:
W = Bipole (twee pylonen per locatie)
M = Monopole (één pylon per locatie)
V = Vakwerkmast

Circuit
Het betreft de volgende aanduidingen:
2 = 2x380 kV (2-circuits 380 kV)
4 = 2x150 kV + 2x380 kV (2-circuits 380 kV en 2-circuits 150 kV)
6 = 4x380 kV (4-circuits 380 kV)

Type mast

Het betreft de volgende aanduidingen:

HM = Hoekmast 120-130 graden
HL = Hoekmast 130-150 graden
HK = Hoekmast 150-180 graden
S = Steunmast 175-180 graden
E = Eindmast
AA = Opstijgpunt 150kV ten behoeve van aftakking (380kV hoekmast; 150kV aftakking)
AE = Opstijgpunt 150kV ten behoeve van inlussing (380kV eindmast; 150kV eindmast)

Veldlengtes

De masten van ZW380 hebben de volgende veldlengtes:

- 350 m
- 400 m
- 450 m

Indien de veldlengte gevolgd wordt door een "S" betreft het een "special" masttype. Op het tracé Borsele – Rilland is dat de mast ZWW4HK400S+5.

Verhogingen

Indien masten ten opzichte van de standaard verhoogd zijn, is dit achter de codering aangegeven. Als voorbeeld is mast ZWW2S400+5 dus met 5 meter verhoogd.

De benaming bakent direct de kaders af waarbinnen het ontwerp mag worden toegepast. In geval van een ZWW2S400 mast bedraagt de maximale veldlengte 400 meter en de maximale geschikte lijnhoek 175 graden. De mast wordt in de bissectrice van de lijnhoek geplaatst.
Indien de veldlengte aan een van de zijden hoger is dan 400 meter en/of de lijnhoek is meer dan 175° dan kan het masttype niet meer toegepast worden.

Om problemen met vortex excitatie van de masten te voorkomen worden Wintrack masten boven de 80 meter niet toegepast of er worden aanvullende voorzieningen getroffen.

3 BELASTINGEN

De belastingen vanuit de geleiders op de mast zijn onafhankelijk van het materiaal van de masten, beton, staal of hybride. Het overgrote deel van de belastingen op de mast zijn afkomstig uit de geleiders, dit zijn de 150 kV en 380 kV fasebundels en de aarddraden, waaronder bliksemdraad, OPGW (Optical Ground Wire) en retourstroomgeleider. Het resterende deel van de belastingen, 20 tot 35%, is afkomstig van wind op het mastlichaam en het 2^{e} orde effect ten gevolge van elastische mastvervorming onder externe belasting.

De Wintrack masten zijn taps toelopende buisvormige masten met een cilindrische doorsnede. Voor alle materiaalsoorten geldt dat het mastoppervlak glad is, met als gevolg dat dezelfde weerstandscoëfficiënt kan worden toegepast. De windbelasting op het mastlichaam neemt enkel toe indien het mastoppervlak toeneemt.

Dit hoofdstuk omschrijft hoe de belastingen zijn opgebouwd.

3.1 Ontwerplevensduur en belastingfactor

De ontwerplevensduur van de ZW380 hoogspanningsverbinding is 50 jaar. Voor de betonfundatie dient voor de duurzaamheid in het ontwerp een referentieperiode van 100 jaar aangehouden te worden. Dit heeft invloed op de betonsamenstelling (milieuklasse) en dekking volgens CUR Leidraad 1. Voor voldoende betrouwbaarheid wordt als terugkeerperiode van de extreme wind- en ijsbelastingen een interval van 500 jaar gehanteerd. In de norm wordt voor klimatologische gegevens (wind en ijs) een terugkeerperiode van 50 jaar gebruikt. De norm geeft aan dat op de belastingen ten gevolge van weersinvloeden een belastingfactor van 1,5 gehanteerd moet worden voor de 500 jaar terugkeerperiode.

3.2 Belastingen en norm

De norm voor hoogspanningslijnen (NEN-EN 50341) schrijft verschillende belastinggevallen voor. De belastingen vanuit de geleider worden veroorzaakt door:

- Gewichtsbelasting
- Trek in de geleiders (in verband met limitering zeeg)
- Wind op de geleiders
- IJsafzetting op geleiders in combinatie met wind
- Extra trekbelasting door lage temperatuur
- Belastingen tijdens constructie en onderhoud
- Security loads, dat wil zeggen bundelbreuk

Behalve voor de security loads geldt dat onder de ontwerpbelastingen geen blijvende vervorming mag ontstaan. Voor staal betekent dit dat de spanning onder de vloeigrens blijft. Onder de security loads dient de constructie niet te falen maar mag wel blijvend vervormen.

In de verificatie van de constructieve integriteit wordt getoetst op plooi van het materiaal. Plooi treedt op indien de stabiliteit van de constructie of een constructie element onvoldoende is. Indien plooi kan optreden volgens de norm wordt de toelaatbare materiaalspanning verlaagd.

De volgende paragrafen beschrijven de meest maatgevende belastingen.

3.2.1 Gewichtsbelasting

De verticale belasting ten gevolge van het gewicht van de geleiders dient door de masten te worden opgenomen.
Het eigengewicht van de mast wordt in de mastberekeningen verdisconteerd, evenals het buigmoment uit de gewichtsbelasting bij mastvervorming.

3.2.2 Trek in de geleiders

De trekbelasting is een horizontale belasting in de richting van de geleiders.
Ook zonder wind, ijs, verlaagde temperatuur en onderhoud wordt er vanuit de geleiders (trek)kracht uitgeoefend op de masten. Dit heeft te maken met het tijdens installatie van de geleiders op trek brengen (aanspannen) van de geleiders om de zeeg, en daarmee de masthoogte, te limiteren. Deze trekbelasting komt voor op steunmasten "S" met kleine lijnhoek, afspan- en hoekmasten "H", eindmasten "E" en speciale masten "A".

Zonder wind- en ijsbelasting op de geleiders, en bij een temperatuur van 10 °C, is de trekkracht in de 380 kV vierbundel gelijk aan 128 kN, dit is 20% van de aanwezige treksterkte in de geleiderbundels. Voor de 150 kV tweebundel is de aanwezige trekkracht 64 kN. Ten gevolge van wind- en ijsbelasting kan de trekkracht ruim verdubbelen, maar blijft ruim onder de aanwezige treksterkte.

3.2.3 Wind op de geleiders

Wind op de geleiders leidt tot extra trekkracht in de geleiders en dwarskracht uit de geleiders op de mast.

Nederland is onderverdeeld in drie windgebieden waarbij Zeeland in windgebied 2 valt. De referentiewindsnelheid op 10 meter hoogte en gebaseerd op het 10 minuten gemiddelde is voor windgebied 2 gelijk aan 22,5 m/s. De windsnelheid neemt toe met hoogte en de ontwerpwindsnelheid wordt gebaseerd op de 3 seconden vlaag.
Als voorbeeld worden voor windgebied 2 de extreme windsnelheid en winddruk op 10, 30 en 45 meter hoogte genoemd.

Windgebied 2		
Hoogte [m]	Extreme windsnelheid (z_0 =0,2 m), 3 sec vlaag [m/s]	Stuwdruk (ρ = 1,25 kg/m^3) [N/m^2]
10	37,5	880
30	44,5	1240
45	47,2	1390

Deze waarden dienen nog gecorrigeerd te worden voor de "span factor", omdat de ruimtelijke omvang van de extreme vlaag beperkt is wordt de geleider tussen twee opeenvolgende masten ("span") niet overal gelijk belast waardoor een reductie mag worden toegepast. Tevens dient gecorrigeerd worden voor de terugkeerperiode van 500 jaar (x1,5).

Naast de geleiders wordt ook het mastlichaam door de wind belast. Voor de mast wordt geen reducerende `span factor` toegepast, wel een vergrotingsfactor om de invloed van mastbeweging (dynamica) mee te nemen.

3.2.4 Ijsafzetting op de geleiders in combinatie met wind

Ijs en wind op de geleiders leidt tot extra trekkracht in de geleiders en vervolgens verticale belasting en dwarskracht uit de geleiders op de mast.
Nederland kent volgens de norm twee ijsgebieden. Zeeland ligt in het voor ijsafzetting wat mildere gebied B. Zoals in de vergunningsrapporten is aangegeven betreft het voor de fasegeleiders 'ijsgebied B' en voor de niet stroomvoerende geleiders zoals bliksemdraad, retourstroomgeleider en OPGW 'ijsgebied A'. Deze ijsgebieden hebben invloed op het gewicht en de dikte van de optredende ijslaag rondom de geleiders. Doordat stroomvoerende geleiders hitte genereren is het maximaal aan te groeien ijsgewicht 1,8 √d (ijsgebied B), waarin 'd' de geleider diameter is. De niet stroomvoerende geleiders genereren geen hitte en het ijs kan met een maximum van 5√d (ijsgebied A) aangroeien.

Als voorbeeld het ijsgewicht voor de in ZW380 toegepast fasegeleider en aarddraden

Geleider	Diameter	Ijsgebied	Ijsgewicht
Fasegeleider AMS-620	32,4 mm	"B"	10,2 N/m
Aarddraad ACSR Hawk en OPGW	22 mm	"A'	23,5 N/m

Naast het extra gewicht neemt eveneens de diameter van de geleider door het ijs toe. Gerekend wordt met een ijsdichtheid van 900 kg/m^3.

Naast de belasting door ijs wordt gerekend met een sterk gereduceerde windsnelheid, 30% van de extreme stuwdruk wordt aangehouden. Voor het windoppervlak wordt rekening gehouden met de dikte van de ijsafzetting.

3.2.5 Extra trekbelasting door lage temperatuur

De trekbelasting is een horizontale belasting in de richting van de geleiders.
Bij verlaging van de temperatuur wordt de geleider verkort. Dit geeft extra trekbelasting in de geleider. De minimum temperatuur is -20 °C. De bijbehorende stuwdruk is 20% van de extreme druk.

3.2.6 Belastingen tijdens constructie en onderhoud

De constructie- en onderhoudsfase bestaat uit een tijdelijke belastingsituatie van maximaal een jaar. Hierbij gaat het vooral om de constructiefase waarbij niet alle geleiders zijn geïnstalleerd. Deze situatie kan afhankelijk van de geïnstalleerde geleiders eenzijdige belastingen en/of torsiekrachten betekenen op de hoek- en eindmasten. Omdat de situatie tijdelijk is wordt met gereduceerde wind- en ijsbelastingen gerekend.

Constructie- en onderhoudsbelastingen gelden enkel voor hoek- en eindmasten. Geleiders worden niet afgespannen op steunmasten en kunnen dus geen eenzijdige belasting of torsie veroorzaken.

Voor onderhoud wordt er rekening gehouden met een lijnwagen (300 kg) of lijnfiets (200 kg) in één geleider of geleiderbundel.

3.2.7 Security loads

De norm schrijft voor dat er rekening gehouden moet worden met geleiderbreuk. In dit geval valt er een geleider of geleiderbundel weg. De norm gaat ervan uit dat de waarschijnlijkheid van geleiderbreuk in combinatie met extreme wind en ijsbelastingen verwaarloosbaar is. Daarom wordt deze belastingsituatie bepaald voor de dagelijkse toestand – geen wind en geen ijs en gemiddelde jaartemperatuur van 10 °C- waarbij alleen de trek vanuit de geleider op de mast werkt. De trek vanuit de geleiders moet in dit geval met 0,8 vermenigvuldigd worden ten gevolge het deels wegvallen van de trekbelasting. In tegenstelling tot de hierboven genoemde belastingsgevallen mag het materiaal van de mast in het geval van geleiderbreuk tot aan de breukgrens worden belast.

4 VERVORMINGSEISEN

Vervorming van de masten wordt bepaald onder de conditie van wind- en ijsbelastingen met een terugkeerperiode van 50 jaar, dit betekent zonder aanvullende belastingfactor. Dit wordt ook wel de Service-ability Limit State (SLS) genoemd. In de norm voor hoogspanningslijnen worden eisen gesteld aan de maximale mastvervorming onder SLS condities.

Voor Wintrack masten gelden aanvullende stijfheidseisen. Onder SLS condities dient de masttopverplaatsing onder 5,5% van de masthoogte te blijven en de mastkromming onder de 0,7% van de masthoogte.
Onder de condities zonder wind en ijs en bij de gemiddelde jaartemperatuur van 10 °C is de toelaatbare masttopverplaatsing 1,0% van de masthoogte en de kromming maximaal 0,25% van de hoogte.

5 MAATGEVENDE BELASTINGSGEVALLEN

Voor elk van de steun- hoek- en eindmasten, zijn andere belastingsgevallen maatgevend. De geleiders worden op hoek- en eindmasten afgespannen.
De genoemde belastingen werken, afhankelijk van het type, verticaal, longitudinaal (in de richting van de lijn) en transversaal (haaks op de lijn).

5.1.1 Hoekmasten

De hoekmasten worden onderverdeeld in drie verschillende lijnhoeken, HM, HL en HK zoals in paragraaf 2.2 wordt omschreven.

Over het algemeen geldt dat hoe groter de lijnhoek, des te hoger de belastingen. Deze maatgevende belastingen worden veroorzaakt door extreme wind- of ijscondities met een terugkeerperiode van 500 jaar.

Transversale krachten van het voor en achter veld (span), werken in dezelfde richtingen en worden bij elkaar opgeteld. Longitudinale krachten in lijnrichting werken tegengesteld en heffen elkaar op. Hieruit valt te concluderen dat wanneer de geleiders onder invloed van wind of ijs zwaarder worden belast in combinatie met een grotere lijnhoek, de transversale kracht wordt vergroot en dus maatgevend wordt. De transversale belasting is gericht in de bissectrice van de lijnhoek

Bij hoekmasten zonder of met een kleine lijnhoek (HK) is de tijdelijke situatie (constructie of onderhoud) met geleiders aan één zijde maatgevend. De belasting is in lijnrichting.

5.1.2 Steunmasten

De maatgevende belasting op steunmasten worden veroorzaakt door extreme wind met een terugkeerperiode van 500 jaar. Dit is een transversale belasting in de bissectrice van de lijn.

5.1.3 Eindmasten

Maatgevend is de situatie veroorzaakt door de combinatie wind en ijs met een terugkeerperiode van 500 jaar. Dit geeft de hoogste trekbelasting in de geleiders en daarmee de hoogste belastingen op de eindmast. De belasting is in lijnrichting.

6 KEUZE VOOR MASTMATERIAAL

De vergunningsaanvraag bestaat uit een drietal materialen voor de masten, beton, staal en hybride. De keuze van materialen is afhankelijk van een aantal aspecten waaronder materiaalkosten, productiekosten en -middelen, transport- en installatiekosten. Om de meest kosteneffectieve mast te kunnen leveren moet de leverancier de ruimte krijgen om in materiaal te kunnen variëren. Dit hoofdstuk beschrijft beknopt een aantal voor- en nadelen van de verschillende materialen.

6.1 Beton

Door de masten in beton uit voeren kan de mast volgens een aantal potentiële leveranciers goedkoper uitgevoerd worden. Ook door de veelal hogere benodigde wanddikte is de stijfheid van deze masten hoger en de vervorming dus minder. De benodigde wanddikte resulteert wel in een hoog mastgewicht en verhoogde transport- en installatiekosten. Door dit hoge gewicht dient de mast opgedeeld te worden in segmenten die op locatie gekoppeld worden. Een andere optie is om op locatie de mastsegmenten te produceren.

6.2 Staal

Met stalen Wintrack masten is ervaring opgedaan in de Randstad 380kV projecten. Voor voldoende constructieve veiligheid, maar vooral door de strikte vervormingseisen, zijn stalen masten relatief zwaar. Dit maakt volledig stalen masten duur ten opzichte van beton en hybride masten.

6.3 Hybride

Hybride masten is de ‘best of both worlds’, een principe wat bij ook bij grote windturbinemasten wel voorkomt. Bij hybride masten wordt het bovenste gedeelte van de masten uitgevoerd in staal en de basis in beton. Een voordeel is dus een lagere vervorming gecombineerd met de lagere prijs door beton en de ervarings- en transport mogelijkheden van staal.

Bijlage 9

Rapport Archeologie

ZuidWest 380kV Hoogspanningsverbinding Borssele-Tilburg

Deelrapportage Zeeland, inventariserend veldonderzoek door middel van verkennende boringen

Concept

TenneT TSO B.V.

Grontmij Nederland B.V.
Arnhem, 10 juni 2014

Grontmij

GM-0135317, revisie 1

Verantwoording

Titel	:	ZuidWest 380kV Hoogspanningsverbinding Borssele-Tilburg
Subtitel	:	Deelrapportage Zeeland, inventariserend veldonderzoek door middel van verkennende boringen
Projectnummer	:	315112
Referentienummer	:	GM-0135317
Revisie	:	1
Datum	:	10 juni 2014

Auteur(s)	:	drs. J.E.M. Wattenberghe
E-mail adres	:	
Gecontroleerd door	:	ir. W.R. Nijhoving
Paraaf gecontroleerd	:	
Goedgekeurd door	:	ir. W.R. Nijhoving
Paraaf goedgekeurd	:	
Contact	:	Grontmij Nederland B.V. Velperweg 26 6824 BJ Arnhem Postbus 485 6800 AL Arnhem T +31 88 811 54 83 F +31 26 445 92 81 www.grontmij.nl

Administratieve gegevens

Onderzoeksvorm	Inventariserend Veldonderzoek door middel van verkennende boringen
Projectnaam	Nieuwe Zuid-West 380 kV Hoogspanningsverbinding Borssele-Tilburg

Locatie

Provincie	Zeeland
Gemeenten	Borsele – Kapelle – Reimerswaal
Plaats	Divers
Adres / Locatie	Divers
RD coördinaten	Divers
Kaartblad	65G – 65H
Kadastraal perceel	Divers
Oppervlakte mastvoetlocatie	Bipole-Steunmast: circa 680 m^2, Bipole-hoekmast: circa 1.170 m^2

Bekende waarden binnen plangebied

AMK status	Geen
Archis waarnemingen	Divers
Archis vondstmeldingen	Geen
Zeeuws Archeologisch Archief	Geen

Opdrachtgever

Naam	TenneT TSO B.V.
Contactpersoon	Dhr. H. Sanders
Adres	Utrechtseweg 310, Arnhem
Contactgegevens	**T** 0800-8366388 **M** -
	E -

Bevoegde Overheid

Naam	Ministerie van Onderwijs, Cultuur en Wetenschap
Contactpersoon	-
Adres	Rijnstraat 50, 2515 XP Den Haag
Contactgegevens	**T** - **M** -
	E -

Adviseur Bevoegde Overheid

Naam	Rijksdienst voor het Cultureel Erfgoed (RCE)
Contactpersoon	-
Adres	Smallepad 5, 3811 MG Amersfoort
Contactgegevens	**T** - **M** -
	E -

Beheer en plaats van documentatie

Naam	Zeeuws Archeologisch Archief (ZAA) Stichting Cultureel Erfgoed Zeeland (SCEZ)
Contactpersoon	Dhr. J.J.B. Kuipers
Adres	Postbus 49, 4330 AA Middelburg
Contactgegevens	**T** 0118 670879 **M** -
	E jjb.kuipers@scez.nl
Digitaal	E-depot: www.edna.nl

Uitvoerder

Naam	Grontmij Nederland B.V./Artefact! Advies en Onderzoek in Erfgoed.
Contactpersoon	ir. W.R. Nijhoving
Adres	Velperweg 26, 6824 BJ
Contactgegevens	**T** 088 8115404 **M** 06 10142125
	E wout.nijhoving@grontmij.nl

Onderzoeksgegevens

Uitvoeringsperiode	Oktober 2012 – december 2013
Archis onderzoeksmelding	54.376
Archis onderzoek	genereren bij definitief rapport
Archis waarneming	Niet van toepassing
Nieuw aangetroffen vind-plaats	Niet van toepassing

Inhoudsopgave

Samenvatting 6

1 Inleiding 9
1.1 Aanleiding, doel en opzet van het onderzoek 9
1.2 Wettelijk kader 10
1.3 Geplande werkzaamheden 13

2 Vooronderzoek 15
2.1 Inleiding 15
2.2 Archeologisch Verwachtingsmodel 15

3 Inventariserend veldonderzoek 18
3.1 Doel en methode 18
3.2 Resultaten 19

4 Conclusie en advies 70
4.1 Conclusie 70
4.2 Advies 76

Bronnenlijst 80

Verklarende woordenlijst 82

Bijlage 1: Tijdstabel

Bijlage 2: Boorstaten

Samenvatting

In opdracht van TenneT TSO B.V. heeft Grontmij Nederland B.V./Artefact! Advies en Onderzoek in Erfgoed tussen oktober 2012 en december 2013 een Inventariserend Veldonderzoek door middel van verkennende boringen en een oppervlaktekartering uitgevoerd ter plaatse van verschillende planlocaties in de provincies Zeeland en Noord-Brabant. Aanleiding tot dit onderzoek is de voorgenomen realisatie van een nieuwe 380 kV hoogspanningsverbinding tussen het hoogspanningsstation Borssele en het landelijke hoogspanningsnet bij Tilburg. Aangezien het tracé bovengronds wordt uitgevoerd, dienen alleen de archeologische waarden te worden onderzocht op de locaties van de mastvoeten en de overige locaties waar grondwerkzaamheden plaats gaan vinden. Elke mastvoet heeft afhankelijk van het type een verstorende oppervlakte van circa 680 m^2 of 1.170 m^2. Thans is sprake van voorkeursalternatief (VKA) v1.2.

Het onderhavige booronderzoek met oppervlaktekartering (IVO-O) werd uitgevoerd in het kader van het rijksinpassingsplan. Conform dit plan dient op die mastvoetlocaties die gelegen zijn in een zone op de IKAW met een middelhoge en hoge trefkans een archeologisch vooronderzoek uitgevoerd te worden. Daartoe werd ook het Programma van Eisen (PvE) opgesteld. Dit PvE bevat enerzijds de selectie van de mastvoetlocaties die door middel van een booronderzoek en oppervlaktekartering moeten worden onderzocht. Anderzijds worden in dit PvE ook de eisen gesteld waaraan dit onderzoek dient te voldoen. Voor het Deelgebied Zeeland betekent dit dat volgende mastvoetlocaties dienen te worden onderzocht: 1027 t/m 1050, 1055 t/m 1075, 1039A en 1059A.

Momenteel werden in Deelgebied Zeeland 42 mastvoetlocaties middels een booronderzoek en een oppervlaktekartering onderzocht. Het betreft hier mastvoetlocaties 1027 t/m 1045, 1047, 1048, 1055 t/m 1058 en 1060 t/m 1075. Bij de overige mastvoetlocaties was er geen betredingstoestemming. Deze deelrapportage omvat enkel de reeds uitgevoerde locaties.
Op basis van het archeologisch verwachtingsmodel kon worden gesteld dat er voor dit deelgebied, met name het Zeeuwse zeekleilandschap een relatief lage verwachting gold voor archeologische resten uit de volgende periodes:[1]

- Paleolithicum tot en met het Midden Neolithicum
- Bronstijd tot en met de vroege ijzertijd
- Vroeg Romeinse tijd tot en met de vroege middeleeuwen

Het Zeeuwse zeekleilandschap binnen het studiegebied kent een middelhoge tot hoge verwachting voor de volgende periodes:

- Laat-Neolithicum
- Midden en Late IJzertijd
- Midden en Laat-Romeinse Tijd
- Late Middeleeuwen tot en met de Nieuwe Tijd

Het archeologisch verwachtingsmodel zoals opgesteld in het Bureauonderzoek kon naar aanleiding van de resultaten van het veldonderzoek getoetst en verder verfijnd worden. Op basis van de toetsing door het booronderzoek en de oppervlaktekartering werd voor elke locatie een advies geformuleerd betreffende eventueel archeologisch vervolgonderzoek. Bij 19 van de 42 onderzochte mastvoetlocaties is vastgesteld dat de bodem intact bewaard is en dat graafwerkzaamheden eventuele archeologische vindplaatsen zouden kunnen verstoren.

[1] Uit de Jong en Evelein 2014

Het betreft hier mastvoetlocaties 1029, 1033 t/m 1036, 1038, 1039, 1042 t/m 1044, 1047, 1048, 1057, 1060, 1062 t/m 1064, 1071 en 1072. Daarom wordt geadviseerd om binnen deze locaties nader archeologisch onderzoek in de vorm van een Archeologische Begeleiding te laten uitvoeren. Het doel van de Archeologische Begeleiding is om eventuele archeologische vindplaatsen die bij de graafwerkzaamheden aangetroffen worden te documenteren en te plaatsen binnen hun geologische en archeologische context. Wanneer behoud in situ van aangetroffen behoudenswaardige archeologische resten niet mogelijk is, dienen deze archeologische resten volledig te worden gedocumenteerd en ex situ veiliggesteld. Vóór de aanvang van een dergelijk onderzoek zal een door de bevoegde overheid beoordeeld en goedgekeurd Programma van Eisen (PvE) moeten worden opgesteld. De keuze voor deze onderzoekvorm is ingegeven door praktische overwegingen. Enerzijds is de verstoringsoppervlakte per mastvoetlocatie eerder beperkt (circa 680 m^2). Bovendien zijn de geplande werkzaamheden van dien aard dat het praktisch nagenoeg onmogelijk is om voorafgaand een proefsleuvenonderzoek en/of opgraving uit te voeren. Doordat bij dit project vele grondeigenaren en grondgebruikers betrokken zijn en gezien het verkrijgen van betredingstoestemming hierbij vaak zeer moeilijk verliep, lijkt het niet wenselijk om voorafgaand aan de eigenlijke graafwerkzaamheden nog een gravend archeologisch onderzoek uit te voeren. Bovendien zijn er nog fysieke belemmeringen (zoals schade aan drainage en gewassen én het plaatsen van bronbemaling) waardoor het af te raden valt om voorafgaand een onderzoek te laten uitvoeren. Deze problemen kunnen ondervangen worden door het verschuiven van het onderzoek naar het moment van de eigenlijke aanleg van de fundering van de mastvoeten. Daarom wordt voor de 19 geselecteerde mastvoeten een Archeologische Begeleiding (AB) volgens het protocol Opgraven geadviseerd. Hiermee wijkt het advies af van het vigerende PvE[2] voor dit onderzoek, waarin de vervolgstappen een archeologisch onderzoek in de vorm van een Inventariserend Veldonderzoek door middel van proefsleuven (IVO-P) wordt voorgesteld. De geplande verstoringsdiepte (met name 2.9 meter –mv voor een steunmast en 3.4 meter –mv voor een hoekmast) was te groot om invloed te kunnen hebben op dit advies. Ter plaatse van alle mastlocaties waar archeologisch vervolgonderzoek wordt geadviseerd zullen door de geplande werkzaamheden mogelijk archeologische niveaus worden geraakt.

In de overige 23 mastvoetlocaties is duidelijk het ontbreken van archeologische indicatoren vastgesteld, of was het bodemprofiel in die mate verstoord, zodanig dat de archeologische verwachting hier afwezig is, of als laag tot zeer laag te beschouwen is. Daarom wordt ter plaatse van deze mastvoetlocaties geen verder archeologisch onderzoek geadviseerd. Het betreft de mastvoetlocaties 1027, 1028, 1030 t/m 1032, 1037, 1039A, 1040, 1041, 1045, 1055, 1056, 1058, 1061 (mits beperking), 1065 t/m 1070 en 1073 t/m 1075.

Het is echter niet uit te sluiten dat binnen die delen van het plangebied waar geen vervolgonderzoek wordt aanbevolen, er desondanks toch relevante archeologische vindplaatsen in de bodem verborgen zijn en dat deze in de uitvoeringsfase van de toekomstige graafwerkzaamheden aan het licht komen. Voor dergelijke vondsten bestaat een wettelijke meldingsplicht op grond van artikel 53 van de (herziene) Monumentenwet. Om er voor te zorgen dat aan deze wettelijke plicht wordt voldaan bij het eventueel aantreffen van sporen en/of vondsten tijdens de uitvoering van de werkzaamheden, wordt verzocht om navolgende tekst in het uitvoeringsbestek op te nemen:

Archeologie
Ondanks er bij het vooronderzoek geen behoudenswaardige archeologische waarden werden aangetroffen, is niettemin de kans aanwezig dat archeologische sporen en vondsten in de bodem
aanwezig zijn en dat deze in de uitvoeringsfase van de graaf- en inrichtingswerkzaamheden aan het licht komen. Voor dergelijke vondsten bestaat een wettelijke meldingsplicht ex. artikel 53 van de Monumentenwet. Bij graafwerkzaamheden dient men dan ook attent te zijn op eventuele vondsten. Opdrachtgever verplicht de aannemers om attent te zijn op eventuele vondsten en/of sporen tijdens de werkzaamheden en verplicht hen archeologische vondsten onverwijld te melden bij de bevoegde minister.

[2] de Visser 2013, p. 14.

In de onderstaande tabel wordt een overzicht gegeven met de onderzochte mastvoetlocaties en daarbij vermeld of er wel dan niet archeologisch onderzoek wordt geadviseerd.

Tabel 1. Tabel met verder te onderzoeken of vrijgegeven mastvoetlocaties.

Mastvoetlocatie	Vervolgonderzoek		Mastvoetlocatie	Vervolgonderzoek
1027	Nee		1048	Ja
1028	Nee		1055	Nee
1029	Ja		1056	Nee
1030	Nee		1057	Ja
1031	Nee		1058	Nee
1032	Nee		1060	Ja
1033	Ja		1061	Nee met beperking
1034	Ja		1062	Ja
1035	Ja		1063	Ja
1036	Ja		1064	Ja
1037	Nee		1065	Nee
1038	Ja		1066	Nee
1039	Ja		1067	Nee
1039A	Nee		1068	Nee
1040	Nee		1069	Nee
1041	Nee		1070	Nee
1042	Ja		1071	Ja
1043	Ja		1072	Ja
1044	Ja		1073	Nee
1045	Nee		1074	Nee
1047	Ja		1075	Nee

1 Inleiding

1.1 Aanleiding, doel en opzet van het onderzoek

In opdracht van TenneT TSO B.V. heeft Grontmij Nederland B.V./Artefact! Advies en Onderzoek in Erfgoed tussen oktober 2012 en december 2013 een Inventariserend Veldonderzoek door middel van verkennende boringen en een oppervlaktekartering uitgevoerd ter plaatse van verschillende planlocaties in de provincies Zeeland en Noord-Brabant. Aanleiding tot dit onderzoek is de voorgenomen realisatie van een nieuwe 380 kV hoogspanningsverbinding tussen het hoogspanningsstation Borssele en het landelijke hoogspanningsnet bij Tilburg. Aangezien het tracé bovengronds wordt uitgevoerd, dienen alleen de archeologische waarden te worden onderzocht op de locaties van de mastvoeten en de overige locaties waar grondwerkzaamheden plaats gaan vinden. Thans is sprake van voorkeursalternatief (VKA) v1.2.

Ten behoeve van dit grootschalige project is in 2010 een Milieueffectrapport (MER) opgesteld, waarin de mogelijke milieueffecten zijn onderzocht. Het aspect archeologie is daarin meegenomen op basis van een Archeologisch Bureauonderzoek.[3] Op basis van de resultaten van dit bureauonderzoek en conform het Rijksinpassingsplan diende een vervolgonderzoek te worden uitgevoerd. Daartoe werd een Programma van Eisen opgesteld, waarin de eisen van het voorliggende onderzoek werden bepaald.[4]

Het doel van het Inventariserend Veldonderzoek door middel van boringen en de oppervlaktekartering is het aanvullen en toetsen van het verwachtingsmodel dat gebaseerd is op het bureauonderzoek. Dit gebeurt met behulp van waarnemingen in het veld, waarbij (extra) informatie wordt verkregen over bekende of verwachte archeologische waarden binnen een onderzoeksgebied. Het bepalen van de aan- of afwezigheid, de aard, de omvang, de datering, de gaafheid, de conservering en de relatieve kwaliteit van de archeologische waarden staat hierbij voorop. Daarnaast zal het Inventariserend Veldonderzoek mogelijk inzicht verschaffen in eventueel aanwezige verstoringen.

Het onderhavige onderzoeksrapport betreft slechts een deelrapportage en bevat enkel de reeds uitgevoerde onderzoeken bij 42 mastvoetlocaties binnen de provincie Zeeland.

Dit rapport zal in eerste plaats aangeven wat het verwachte effect van de geplande ingrepen is op de mogelijke aanwezige archeologische waarden in de verschillende onderzoekslocaties.

Afbeelding 1. Ligging van de nieuwe hoogspanningsverbinding Deelgebied Zeeland op een overzichtskaart van Nederland (rode lijn).

[3] de Jong 2010, ArcheoLogic Rapport 136, Eindconcept maart 2014: de Jong en Evelein

[4] de Visser 2013, Grontmij Programma van Eisen

De resultaten van het onderzoek worden verwerkt in een rapportage met een inhoudelijk advies aan de hand waarvan een beleidsbeslissing genomen kan worden ten aanzien van een eventuele vervolgstap in de AMZ (Archeologische Monumenten Zorg) cyclus: vrijstelling, planaanpassing, behoud in situ of eventueel nader archeologisch onderzoek.
Het onderzoek werd uitgevoerd conform de Kwaliteitsnorm Nederlandse Archeologie (KNA) versie 3.2, de aanvullende richtlijnen voor archeologisch vooronderzoek van de Provincie Zeeland.[5]

Afbeelding 2. Topografische Kaart met daarop de ligging van het nieuwe hoogspanningstracé (VKA 1.2) binnen de provincie Zeeland (blauwe lijn). Bron: ESRI, het Kadaster 2013.

1.2 Wettelijk kader

1.2.1 Rijk

Sinds 1 september 2007 is de herziene Monumentenwet 1988 van kracht. Middels de 'Wet op de archeologische monumentenzorg' (Wamz) is hiermee het verdrag van Malta binnen de Nederlandse wetgeving geïmplementeerd. Het Europese Verdrag van Valletta beoogt het cultureel erfgoed, dat zich in de bodem bevindt, beter te beschermen.

Deze Wamz regelt de bescherming van archeologisch erfgoed in de bodem, de inpassing ervan in de ruimtelijke ontwikkeling en de financiering van archeologische onderzoeken. De belangrijkste veranderingen als gevolg van deze nieuwe wetgeving betreffen:

- het streven naar behoud en bescherming van archeologische waarden in de bodem
- de archeologische monumentenzorg wordt een geïntegreerd onderdeel van het ruimtelijk ordeningsproces

[5] Aanvullende richtlijnen voor archeologisch onderzoek in de Provincie Zeeland.

- de kosten van archeologische werkzaamheden komen in principe voor rekening van de initiatiefnemer van bodemverstorende activiteiten (principe van 'veroorzaker betaalt')

Een bijzonder aspect van de Wamz is dat er geen inhoudelijke toetsingskaders of normen en interventiewaarden zijn opgenomen. In de wet staat enkel een ondergrens voor onderzoek aangegeven van 100 m^2 zonder dieptemaat.

Het onderhavige booronderzoek met oppervlaktekartering (IVO-O) werd uitgevoerd in het kader van het rijksinpassingsplan.[6] Conform dit plan dient op die mastvoetlocaties die gelegen zijn in een zone op de IKAW met een middelhoge en hoge trefkans een archeologisch vooronderzoek uitgevoerd te worden. Daartoe werd ook het Programma van Eisen (PvE) opgesteld. Dit PvE bevat enerzijds de selectie van de mastvoetlocaties die door middel van een booronderzoek en oppervlaktekartering moeten worden onderzocht. Anderzijds worden in dit PvE ook de eisen gesteld waaraan dit onderzoek dient te voldoen.

Voor het Deelgebied Zeeland betekent dit dat volgende mastvoetlocaties dienen te worden onderzocht: 1027 t/m 1050, 1055 t/m 1075, 1039A en 1059A.

Momenteel werden in Deelgebied Zeeland 42 mastvoetlocaties middels een booronderzoek en een oppervlaktekartering onderzocht. Het betreft hier mastvoetlocaties 1027 t/m 1045, 1047, 1048, 1055 t/m 1058 en 1060 t/m 1075. Bij de overige mastvoetlocaties was er geen betredingstoestemming. Deze deelrapportage omvat enkel de reeds uitgevoerde locaties.

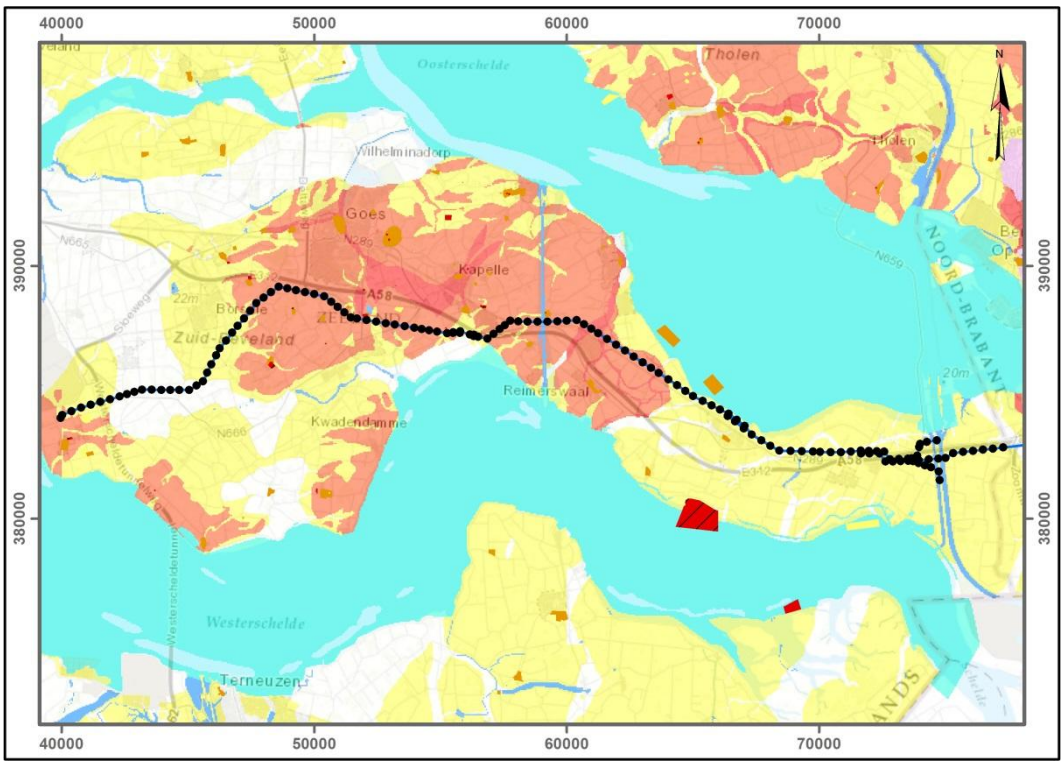

Afbeelding 3. Ligging van de Mastvoetlocaties binnen Zeeland. De ligging is geprojecteerd op de IKAW en de AMK. De zones met oranje en rode kleur duiden op respectievelijk een middelhoge en hoge trefkans op het aantreffen van archeologische waarden. Schaal 1: 300.000. Bron: RCE, ESRI, het Kadaster 2013.

[6] Zoals in het PvE staat aangegeven: zie de Visser 2012, 6.

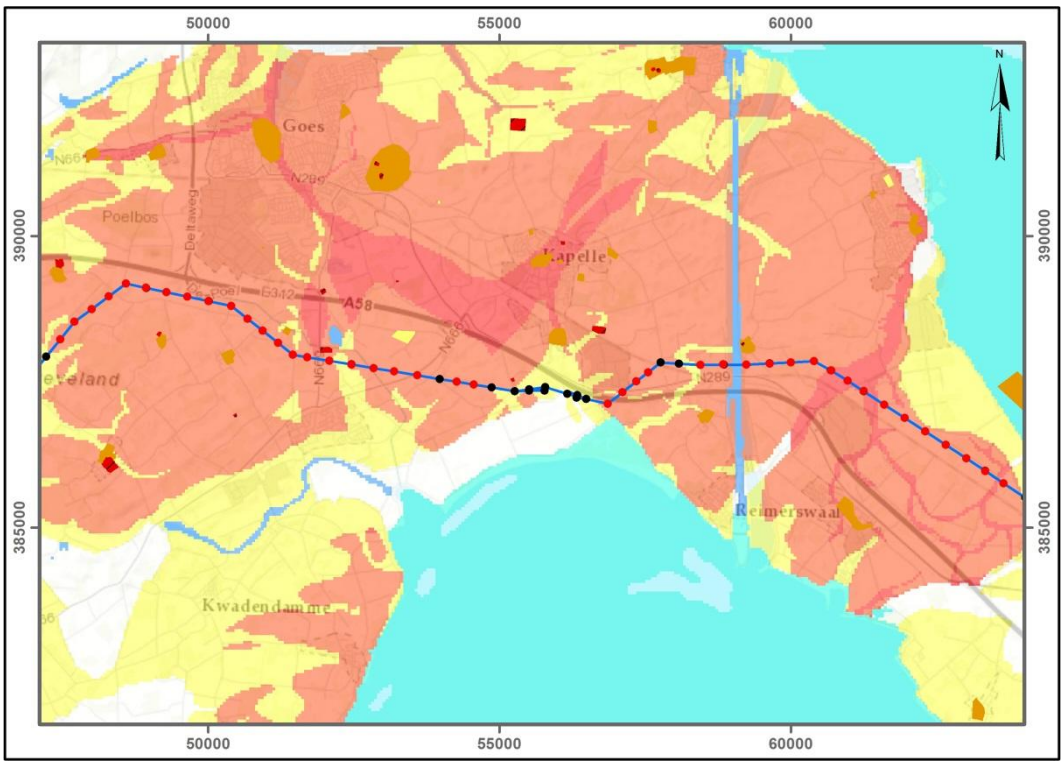

Afbeelding 4. Ligging van de mastvoetlocaties binnen de in het PvE geselecteerde zone met middelhoge (oranje) en hoge (rode) archeologische verwachting op de IKAW. De rode stippen markeren de uitgevoerde mastvoetlocaties. De matlocaties ter plaatse van de zwarte stippen konden nog niet worden uitgevoerd. Schaal 1: 130.000. Bron: RCE, ESRI, het Kadaster 2013.

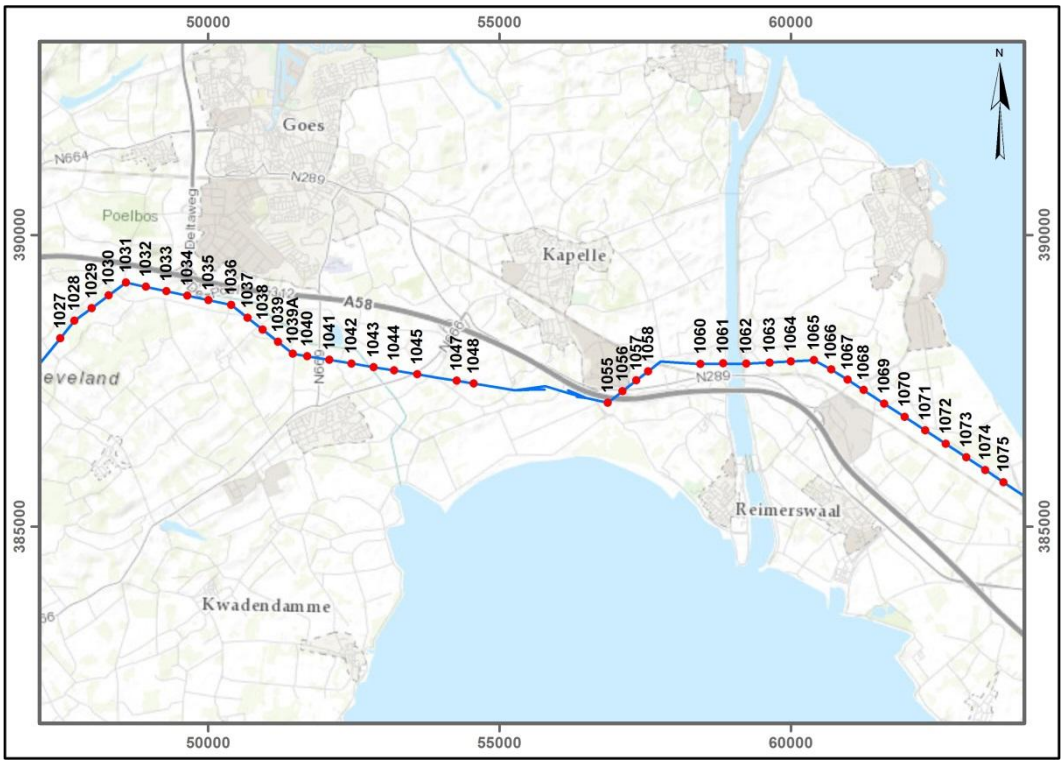

Afbeelding 5. Ligging van de uitgevoerde mastvoetlocaties met hun nummer op een uitsnede van de Topografische kaart. Schaal 1: 130.000. Bron: ESRI, het Kadaster 2013.

1.2.2 Provincie

Het beleid van de Provincie Zeeland ten aanzien van de Archeologische Monumentenzorg is vastgelegd in de Cultuurnota 2013 - 2015. Daarnaast heeft de provincie in 2009 aanvullende richtlijnen opgesteld voor het uitvoeren van een Bureauonderzoek, onderzoek op veen en onderzoek op dagzomend en dun afgedekt dekzand.

In 2008 is een Provinciale Onderzoeksagenda Archeologie Zeeland 2009-2012[7] (POAZ) opgesteld waarbij het hoofdthema, het dynamische landschap met contrasterende betekenissen centraal staat. Dit is uitgewerkt in drie grote diachrone thema's, welke verder worden uitgediept in vier subthema's per periode.

1.2.3 Gemeente

Met de komst van de Wet op de archeologische Monumentenzorg (Wamz) is de verantwoordelijkheid voor het cultureel erfgoed in grote mate verschoven van Rijk en provincie naar de gemeenten. Gemeenten worden verantwoordelijk gehouden voor de omgang met archeologische waarden binnen het gemeentelijk grondgebied.

Daartoe worden de gemeenten gestimuleerd om een eigen archeologiebeleid te voeren, waaruit blijkt dat de gemeente alle belangen heeft gezien en afgewogen.

Het Rijk verwacht dat elke gemeente een eigen beleid voert dat recht doet aan de uitgangspunten van de nieuwe wetgeving.

Alle Zeeuwse gemeenten hebben daarop besloten een archeologische beleidsadvieskaart op te stellen. Alle betrokken gemeenten binnen het zoekgebied hebben in 2011 een eigen archeologiebeleid vastgesteld. Het gaat in deze om de gemeenten Borsele, Kapelle, Reimerswaal.

1.3 Geplande werkzaamheden

Ten behoeve van de aanleg van de nieuwe Zuid-West 380 kV hoogspanningsverbinding tussen Borssele en Tilburg dienen in de provincie Zeeland 145 mastlocaties te worden gerealiseerd. In de meeste gevallen gaat het om het plaatsen van nieuwe hoogspanningsmasten. Er werd voor dit tracé geopteerd voor drie types masten: De Bipole-steunmast, de Bipole-hoekmast en de Monopole. Voor de fundering van deze masten is een verankerde mastvoet vereist. Hoogspanningsmasten hebben een stevige fundering nodig. Hiervoor worden allereerst betonnen palen in de grond geheid. Vervolgens wordt een bouwput van circa 3 meter diep gegraven.[8] Via bronbemaling wordt deze bouwput vrijgehouden van water. In de bouwput wordt een fundering van beton gemaakt. Voor een algemene indruk van de geplande werkzaamheden ter plaatse van de nieuwe mastlocaties wordt verwezen naar

[7] Hessing et al., 2008.

[8] De diepte is indicatief en afgeleid van de website: http://www.zuid-west380kv.nl/de-bouw-stap-voor-stap/. Concrete bouwplannen van de individuele mastlocatie zijn op dit ogenblik nog niet beschikbaar.

Afbeelding 6

Afbeelding 6. Voorbeeld van een fundering van een hoogspanningsmast en impressie van de hiertoe aangelegde bouwput. Bron: http://www.zuid-west380kv.nl.

Concrete bouwplannen van de individuele mastlocatie zijn op dit ogenblik nog niet beschikbaar. Op basis van de door TenneT verstrekte gegevens konden wel een aantal maten worden afgeleid. In onderstaande tabel wordt per type mast de omvang van de bouwput, de geplande ontgravingsdiepte en de bemalingsduur weergegeven.

Tabel 2. Masttypes, dimensies van de bouwput en de bemalingsduur

Codering	Type	Lengte bouwput (m)	Breedte bouwput (m)	Ontgravingsdiepte (m –mv)	Bemalingsduur (dagen)
W.S...	Bipole – steun-mast	39	17	2,9	42
W.H…	Bipole – hoek-mast	51	23	3,4	42
M.S… /M.H…	Monopole	23	23	2,9	42

Bij de 42 onderzochte mastvoetlocaties in Zeeland gaat het enkel om mastvoeten voor het type Bipole-steunmast en het type Bipole-hoekmast. Het masttype wordt telkens bij de besproken mastvoet vermeld, omdat het type ook overeenkomt met een ontgravingsdiepte. Naar gelang de ontgravingsdiepte worden archeologische niveaus wel of niet geraakt. Daarom is de ontgravingsdiepte van belang voor de advisering van archeologisch vervolgonderzoek.

2 Vooronderzoek

2.1 Inleiding

Ten behoeve van de MER-procedure werd in 2010 een Archeologisch Bureauonderzoek uitgevoerd.[9] In dit onderzoek werd een bovenregionaal verwachtingsmodel opgesteld, op basis van landschappelijke, archeologische en historische bronnen. Uit het bureauonderzoek kwam naar voren dat het noodzakelijk was om een Inventariserend Veldonderzoek, verkennende fase, door middel van boringen uit te voeren, ten einde het archeologische verwachtingsmodel te toetsen.

Hieronder wordt het archeologische verwachtingsmodel voor het Deelgebied Zeeland integraal uit bovenstaand onderzoeksrapport overgenomen.

2.2 Archeologisch Verwachtingsmodel[10]

Het Zeeuwse zeekleilandschap binnen het studiegebied kent een relatief lage verwachting voor archeologische resten uit de volgende periodes:

- Paleolithicum tot en met het Midden Neolithicum
- Bronstijd tot en met de vroege ijzertijd
- Vroeg Romeinse tijd tot en met de vroege middeleeuwen

Alleen op plaatsen waar de Pleistocene ondergrond intact is en relatief ondiep onder het oppervlak ligt, kunnen Paleolithische en Mesolithische vindplaatsen aanwezig zijn. Op basis van de Pleistocene morfologie is dit met name het geval in het zuidelijke deel van de Zak van Zuid-Beveland, het smalle deel in het oosten van Zuid-Beveland, alsmede het centrale, zuidelijke deel van Tholen (daar waar de Rillandrug loopt). De archeologische verwachting op sporen daterend uit de overige genoemde periodes in het Zeeuwse deel van het studiegebied is laag, omdat het gebied toen geheel of gedeeltelijk onder water stond. Het Zeeuwse zeekleilandschap binnen het studiegebied kent een middelhoge tot hoge verwachting voor de volgende periodes:

- Laat-Neolithicum
- Midden en Late IJzertijd
- Midden en Laat-Romeinse Tijd
- Late Middeleeuwen tot en met de Nieuwe Tijd

Vanaf het Laat-Neolithicum is er een hoge verwachting omdat men vanaf die periode de lagergelegen delen ging bewonen. De hoge verwachting op sporen daterend voor de Late Middeleeuwen is vooral gerelateerd aan het Oudland: het centrale deel van Zuid-Beveland (rond Goes) en het zuidelijke deel van Tholen.

2.2.1 Vindplaatsen

Archeologische vindplaatsen uit het Laat-Paleolithicum kunnen aanwezig zijn, maar liggen vaak op grote diepte, waardoor ze zelden worden aangetroffen. Alleen op plaatsen waar het oorspronkelijke paleoreliëf relatief ondiep onder maaiveld ligt, is er een reële trefkans op vindplaatsen uit die periode. Daarnaast is door erosie in latere fases van het Holoceen een grootdeel van het Pleistocene oppervlak verspoeld. Direct ten zuiden van Ellewoutsdijk op Zuid-Beveland zijn in de Westerschelde vondsten daterend uit het Laat-Paleolithicum aangetroffen. Het betreft een Levallois-afslag en een bewerkt rendiergewei.[11]

[9] de Jong en Evelein 2014

[10] de Jong en Evelein 2014, 131-136

[11] Trimpe Burger 1961

Mesolithische vindplaatsen zijn alleen bekend in Zeeuws-Vlaanderen en het westelijke deel van Noord-Brabant, dat wil zeggen op de hoger gelegen delen. Naar verwachting kunnen onder de Holocene afzettingen Mesolithische vindplaatsen liggen. Vondsten in de Rijn / Maasdelta en de Maasvlakte tonen aan dat de regio bewoond was tijdens het Mesolithicum. De trefkans is, net als voor het Paleolithicum, klein, mede vanwege het feit dat aanwezige vindplaatsen door latere overstromingen verstoord kunnen zijn geraakt. Karakteristieke eigenschappen van deze periode in Zeeland zijn de zogenaamde Creswell en Feuille de Gui pijlpunten en het gebruik van Wommersomkwartsiet voor het maken van werktuigen.[12]

In het Vroeg- en Midden-Neolithicum zijn in Zeeland bewoningssporen bekend in het noordwesten van Walcheren.[13] Het lijkt er op dat men in deze fase van het Holoceen op een strandwal voor de huidige kust van Walcheren woonde. In de landinwaarts gelegen getijdenvlakten zijn tot het Laat-Neolithicum geen aanwijzingen voor bewoning gevonden en vermoed wordt dat deze gebieden tijdens het Vroeg en Midden-Neolithicum nog regelmatig overstroomden. Vanaf 4400 v. Chr. ontstaan de eerste boerengemeenschappen op de hoger gelegen Pleistocene gronden in Zeeuws-Vlaanderen. De materiële resten die hiermee worden geassocieerd behoren tot de Michelsberg-cultuur.[14] Vanaf het Laat-Neolithicum zijn ook vindplaatsen bekend in de lager gelegen getijdenvlakten van Zeeland. Zo zijn bij Sint-Maartensdijk[15] op Tholen en bij Saeftinge[16] in Oost Zeeuws-Vlaanderen vindplaatsen bekend waar Neolithische (vuurstenen) bijlen zijn gevonden. Bewoning van de lager gelegen delen (in de vorm van Flachsiedlungen) werd mogelijk doordat het gebied verlandde door sedimentatie en omdat het hoogwaterniveau in die periode daalde, waardoor het land permanent droog kwam te liggen.

Vindplaatsen daterend uit de Bronstijd zijn nauwelijks bekend in Zeeland. Wel is er in de Augustapolder op de Brabantse Wal bij Bergen op Zoom een bronzen hielbijl daterend uit de Midden-Bronstijd gevonden[17].

Uit de Vroege IJzertijd is een vindplaats, bestaande uit een nederzetting en een urnenveld, bekend nabij Halsteren op de Brabantse Wal.[18] De Zeeuwse veengebieden lijken niet te zijn bewoond gedurende de Bronstijd en de Vroege IJzertijd, omdat het toen te nat was voor bewoning. Vanaf het begin van de tweede helft van de Midden-IJzertijd zijn vindplaatsen in de veengebieden bekend. Op Tholen zijn vondsten gedaan uit de Late IJzertijd. Het aangetroffen aardewerk behoort tot de Domburg type I en II stijlgroep.[19]

Tussen 50 v. Chr. en 50 n. Chr. zijn geen Romeinse vindplaatsen bekend in het kustlandschap van Zeeland. Pas vanaf de tweede helft van de eerste eeuw n. Chr. worden de veengronden en strandwallen op Walcheren, Noord-Beveland en Schouwen weer bewoond. De dichtstbevolkte gebieden (op basis van het aantal bekende vindplaatsen) tijdens de Vroeg- en Midden-Romeinse tijd zijn Walcheren en Zuid-Beveland.

Opmerkelijk is dat een relatief groot deel van deze vindplaatsen in de veengebieden liggen. Op veel plaatsen zijn dikke aslagen gevonden die worden geassocieerd met industriële activiteiten. Een voorbeeld hiervan is briquetage, het verkrijgen van zout door verdamping in het zogenaamde briquetage aardewerk. Een probleem is echter dat op weinig plaatsen dergelijk aardewerk is aangetroffen. Op een vindplaats bij 's-Heer Abtskerke op Zuid-Beveland zijn meerdere ovens gevonden, maar geen briquetage materiaal, wat duidt op andere economische activiteiten zoals raffinage van zeezout of het winnen van kalk uit schelpen.[20] Bewoningssporen uit de 4de tot en met de 7de eeuw zijn zeldzaam in Zeeland. Na de Midden-Romeinse tijd neemt de invloed van de zee weer sterk toe (tweede inundatie van Zeeland).

[12] Verhart 1990
[13] van Heeringen 1987
[14] Verhagen 1994
[15] Vos en van Heeringen 1997
[16] van Heeringen 1988
[17] Louwe Kooijmans 1974
[18] Verhagen 1984
[19] van Heeringen 2005
[20] van den Broeke 1996

Alleen op de strandwallen op Walcheren[21] en bij Aardenburg[22] zijn munten uit de 4de eeuw gevonden. Uit de Merovingische tijd is alleen een nederzetting met grafveld uit de 6de tot en met de 9de eeuw bekend gelegen ten noorden van Domburg op Walcheren.[23]

Vanaf de 10de eeuw worden de lager gelegen delen van Zeeland, onder meer Zuid-Beveland en Tholen, opnieuw gekoloniseerd. Een voorbeeld van de vele Flachsiedlungen uit de 9de en de 10de eeuw is gelegen bij Abbekinderen[24] op Zuid-Beveland. Aan het einde van de 9de eeuw werden op een aantal plaatsen ronde versterkingen (burgen) gebouwd. Bij Kloetinge op Zuid-Beveland zijn aanwijzingen gevonden voor een omwalling.[25] Flachsiedlungen zijn vaak bewaard gebleven onder later aangelegde vliedbergen.

Bekende voorbeelden op Zuid-Beveland zijn de Berg van Troje[26] bij Borssele en de Duivelsberg bij Kapelle[27], en op Tholen de oude nederzetting Westkerke.[28] In de 11de eeuw wordt Zuid-Beveland systematisch bedijkt. De snelheid waarmee dit gebeurt, wordt mogelijk gemaakt door:[29]

- Gunstige landschappelijke condities: de zoutmoerassen waren al voor een groot deel dichtgeslibd
- Gunstige economische condities: voor de lakenindustrie in Vlaanderen was schapenwol nodig. Het was dus zeer aanlokkelijk om de zoutmoerassen geschikt te maken voor beweiding
- De opkomst van de Vlaamse abdijen zorgde voor genoeg politieke invloed, geld en organisatie om landwinning op grote schaal mogelijk te maken

Gedurende de late middeleeuwen was veenontginning een belangrijke economische activiteit. De veenmoerassen in de hoger gelegen delen van het kustgebied werden als eerste ontgonnen. Dit leidde er toe dat rond circa 1300 de veengebieden in Zeeland bijna waren verdwenen. Het gevolg was dat systematische veenexploitatie zich verplaatste naar Brabant en Holland. In het gebied tussen Bergen op Zoom en Breda waren de veenreserves reeds in de 15de eeuw tot een minimum geslonken.[30] Een andere vorm van veenexploitatie, die typisch is voor veen waarop tijdens inundatie een dunne kleilaag is afgezet, is het zogenaamde darinck delven of moerneren. Het veen werd gebruikt voor zoutwinning. Met zeewater verzadigd veen (darinck of zel) werd verbrand en de as (zelas) werd vervolgens vermengd met zeewater en ingedampt in een loden of gietijzeren pan. Deze vorm van zoutwinning verdween in de 15de eeuw als gevolg van import van Frans en Spaans zout. Veen werd toen gebruikt om het geïmporteerde zout te raffineren. Dit proces is vergelijkbaar met de briquetage uit de Romeinse tijd. Moerneren werd onder meer gedaan in de Yerseke Moer, dat is gelegen in het Verdronken Land van Zuid-Beveland.[31]

De grootschalige indijkingen tijdens de middeleeuwen hadden tot gevolg dat grote delen van Zeeland veel kwetsbaarder werden voor overstromingen. Er was minder ruimte voor het water, omdat het zich niet meer kon verspreiden over de getijdenvlakte. Hierdoor werd bij stormvloeden de maximale capaciteit van de dijken overschreden met als resultaat dijkdoorbraken. Bij dijkdoorbraken ontstond door de kracht van het water vaak een wiel. Het Verdronken Land van Zuid-Beveland ging verloren tijdens St. Felixvloed in 1530.[32]

---

[21] van Heeringen 1987
[22] Trimpe Burger 1992
[23] van Heeringen et al. 1995
[24] van Heeringen et al. 1995
[25] van Heeringen et al. 1995. Dit is op basis van huidig onderzoek echter achterhaald. Zie van Dierendonck 2009, 258.
[26] Besteman 1981
[27] van Heeringen 1986
[28] van Heeringen 1991
[29] Dekker 1971
[30] Leenders 1989
[31] Dekker 1971
[32] Vos en van Heeringen 1997

3 Inventariserend veldonderzoek

3.1 Doel en methode

Bij het inventariserend veldonderzoek wordt een onderscheid aangebracht in een verkennende, karterende en waarderende fase. De verkennende fase heeft tot doel inzicht te krijgen in de vormeenheden van het landschap voor zover deze van invloed zijn op de locatiekeuze. Een eenvoudige terreininspectie, maar ook geo-archeologisch booronderzoek behoren tot de middelen. Op deze manier worden kansarme zones uitgesloten en kansrijke zones geselecteerd voor de volgende fasen. Tijdens de karterende fase wordt het onderzoeksgebied systematisch onderzocht op de aanwezigheid van archeologische vondsten of sporen. De waarderende fase sluit aan op de karterende fase. Het waarnemingsnet kan verdicht worden om de horizontale begrenzing, ligging en omvang van archeologische vindplaatsen vast te stellen. Tevens kunnen aanvullende methoden worden ingezet om ontbrekende informatie, ten behoeve van een waardestelling, te verzamelen. Bij de keuze voor de uitvoering van het inventariserend veldonderzoek dient altijd de minst destructieve methode te worden gekozen om aantasting van de waarden vóór een eventueel besluit tot beschermen of opgraven, tot een minimum te beperken.

Booronderzoek en proefsleuvenonderzoek zijn op dit moment de enige karterende methoden voor het opsporen van (niet zichtbare) sites buiten de historische kern die breed inzetbaar zijn.

Booronderzoek is een geschikte prospectietechniek voor het opsporen van sites die zich kenmerken door een archeologische laag of een vondststrooiing met een voldoende hoge dichtheid. Indien een op te sporen site zich kenmerkt door een lage vondstdichtheid (< 40 vondsten/m²), is booronderzoek minder geschikt. Booronderzoek maakt het verder mogelijk de diepteligging, de dikte en de stratigrafische positie van de archeologische laag of lagen te bepalen. Daarnaast is booronderzoek een betrouwbare methode om de mate van antropogene verstoring en/of natuurlijke bodemerosie van het te onderzoeken gebied, te kunnen bepalen. In beide gevallen kunnen archeologische sporen geheel of gedeeltelijk verdwenen zijn.

Proefsleuvenonderzoek is bij lage vondstdichtheden en een grondsporenniveau effectiever in het opsporen van sites dan booronderzoek. Sites met een lage vondstdichtheid maar zonder een grondsporenniveau kunnen het best opgespoord worden door het (handmatig) graven van testputten.

Voor onderhavig onderzoek is conform het Rijksbeleid gekozen voor het uitvoeren van een Inventariserend Veldonderzoek door middel van verkennende boringen ter plaatse van de mastvoeten die gepland worden in zones met een middelhoge en hoge trefkans op archeologische resten (IKAW). Deze locaties liggen binnen het Zeeuws kleigebied (archeoregio 14). Het doel van het onderzoek is het aanvullen en toetsen van het gespecificeerde verwachtingsmodel dat gebaseerd is op het bureauonderzoek. De mastvoetlocaties in de provincie Zeeland die voldoen aan deze criteria zijn locaties 1027 t/m 1050 en 1055 t/m 1075. Enkele locaties konden vooralsnog niet worden uitgevoerd. Het betreft hier de locaties 1046, 1049, 1050, 1059 en 1059A.

Het onderzoek werd uitgevoerd conform de Kwaliteitsnorm Nederlandse Archeologie (KNA) versie 3.2, de aanvullende richtlijnen voor archeologisch vooronderzoek van de provincie Zeeland en de geldende eisen binnen de betrokken gemeenten. Een dergelijk onderzoek bestaat in dit geval uit het zetten van 6 (guts)boringen per ha of een minimum van 4 (gust)boringen per plan. Aangezien de mastvoeten elke circa 680 m2 groot zijn, dienen er dus per genoemde mastvoetlocatie 4 (guts)boringen te worden gezet.

In totaal werden op dit moment binnen de provincies Zeeland 42 mastvoetlocaties afgewerkt. In totaal werden op deze 42 locaties 169 boringen gezet. De boringen zijn ingemeten door middel van een dGPS met een maximale horizontale en verticale afwijking van 2 centimeter. Voor een ligging van de boringen wordt verwezen naar de bespreking van de individuele boorlocaties. Voor een einddiepte van elke individuele boring wordt verwezen naar de boorstaten, in Bijlage 2, achter in dit rapport. Afhankelijk van de geomorfologie werd onderstaande boorstrategie toegepast:

3.1.1 Veengebied

In het geval van een ondergrond van veen dient gebruik te worden gemaakt van een 3 cm gutsboor, die tot minimaal 30 cm in de top van het Hollandveen gezet moet worden. Vanaf de bouwvoor kan indien gewenst tot maximaal 50 cm - mv gebruik worden gemaakt van een Edelmanboor van 7 cm. De boringen dienen tot minimaal 30 cm onder het Hollandveen Laagpakket gezet te worden, met een maximum van 4.00 meter - mv.

3.1.2 Kreekruggen

Indien blijkt dat er sprake is van kreeg- of getijinversieruggen (Laagpakket van Walcheren) moet worden overgestapt op of gebruik worden gemaakt van een 10 cm Edelmanboor. Deze boringen dienen tot minimaal 1.50 meter -mv gezet te worden, met een maximum van 4.00 meter - mv.

De boringen zijn bodemkundig beschreven volgens de Archeologische Standaard Boorbeschrijvingsmethode (ASB; SIKB 2008). Voor een beschrijving van de boringen wordt verwezen naar de boorstaten in bijlage 9. Het opgeboorde materiaal is in het veld visueel gecontroleerd op de aanwezigheid van archeologische indicatoren. Het nemen van grondmonsters behoorde, gezien de (verkennende) fase waarin het onderzoek zich bevond, niet tot de opdracht.
Specifiek voor het opsporen van vindplaatsen uit de middeleeuwen werd waar mogelijk voorafgaand aan het uitvoeren van de boringen een oppervlaktekartering uitgevoerd. Hierbij werd het terrein visueel geïnspecteerd worden op de aanwezigheid van eventuele archeologische indicatoren, zoals aardewerk, puinspikkels, metaal, (verbrande) leem, (verbrand) bot en houtskool. Binnen de mastvoetlocaties die in gebruik zijn als akkerland of boomgaard kon er geen veldkartering worden uitgevoerd. Tijdens het veldonderzoek werd ook gelet op hoogteverschillen, verkavelingspatronen en perceelsvormen, die een aanwijzing kunnen zijn voor bewoning.

3.2 Resultaten

3.2.1 Inleiding

Hieronder wordt een overzicht gegeven van de 42 mastvoetlocaties waarbinnen het archeologisch onderzoek werd uitgevoerd. Naast de ruimtelijke ligging van de boorpunten wordt een samenvatting van de bodemkundige waarden binnen deze planlocatie geschetst. Hierbij worden ook de eventuele archeologische waarden alsook de toetsing aan het archeologische verwachtingsmodel gegeven, waarna een advies inzake archeologie wordt geformuleerd. Vervolgonderzoek kan worden geadviseerd wanneer de middelhoge of hoge archeologische verwachtingswaarde (zie IKAW) bevestigd wordt door de gegevens uit het veldonderzoek ter plaatse van de onderzochte mastvoetlocatie. Soms kan dit zijn doordat archeologische indicatoren in het boorresidu of aan het maaiveld worden vastgesteld, maar meestal is er een positieve toetsing op basis van een (deels) gaaf bewaard geologisch profiel. Binnen de onderzoekslocaties in Zeeland is dit bodemprofiel op te delen in twee grote groepen. De Eerste groep heeft een bodemprofiel dat op te delen is in drie geologische niveaus, met name:

- het niveau van het Laagpakket van Walcheren (Formatie van Naaldwijk). Dit niveau wordt aangetroffen vanaf het maaiveld en hierop kunnen zich archeologische resten uit de Middeleeuwen en de Nieuwe Tijd worden aangetroffen;
- hieronder bevindt zich het niveau van het Hollandveen Laagpakket (Formatie van Nieuwkoop). In de top van het veen kunnen resten uit de Late IJzertijd en de Romeinse Tijd voorkomen;
- onder het veen zit het niveau van het Laagpakket van Wormer (Formatie van Naaldwijk). Afzettingen van dit pakket zijn, net als het Laagpakket van Walcheren, van mariene oorsprong en worden gekenmerkt door rietresten in de top. In de top van deze afzettingen zouden zich resten uit het Laat-Neolithicum kunnen manifesteren. Dit is echter een theoretisch gegeven, daar nog geen archeologische vondsten uit deze periode op dit niveau werden gedaan in Zeeland.

De tweede grote groep heeft een bodemprofiel dat wordt gekenmerkt door de aanwezigheid van een fossiele inbraakgeul. Deze geulen hebben zich vanuit de zee ingesneden in het oudere landschap. Hierdoor is meer of mindere mate de onderliggende bodem geërodeerd. Dit betekent dat de archeologische verwachting die op deze geërodeerde niveaus komt te vervallen. De kreekbeddingen zijn vervolgens gevuld geraakt met een hoofdzakelijk zandig sediment of met een laminatie van klei en zandlagen. Door landschapsinversie werden deze kreekbeddingen hogere ruggen in het landschap waardoor ze in vanaf de middeleeuwen interessant werden voor bewoning. De middelhoge of hoge archeologische verwachting op de IKAW is dan ook hierop gebaseerd.

Indien een - en dit geldt voor zowel de eerste als de tweede groep - een onverstoord bodemprofiel wordt aangetroffen dient, verder archeologisch onderzoek te worden geadviseerd. In het kader van onderhavig onderzoek wordt geadviseerd om binnen deze locaties nader archeologisch onderzoek in de vorm van een Archeologische Begeleiding te laten uitvoeren. Het doel van de Archeologische Begeleiding is om eventuele archeologische vindplaatsen die bij de graafwerkzaamheden aangetroffen worden te documenteren en te plaatsen binnen hun geologische en archeologische context.

Wanneer behoud in situ van aangetroffen behoudenswaardige archeologische resten niet mogelijk is, dienen deze archeologische resten volledig te worden gedocumenteerd en ex situ veiliggesteld.

Wanneer het bodemprofiel ter plaatse van de mastvoetlocatie verstoord blijkt te zijn hoeft er geen verder archeologisch onderzoek te gebeuren.

Gezien de aard en het doel van dit onderzoek werd ervoor gekozen om deze gegevens in tabelvorm weer te geven. In deze tabel wordt per mastlocatie ook getracht ook een antwoord te formuleren op de onderzoeksvragen uit het Programma van Eisen (PvE). Aangezien de exacte constructieplannen van de mastvoeten nog niet beschikbaar zijn kon de diepte van de verstoring en de diepteligging van eventueel archeologische verwachtingsniveaus nog niet worden gekoppeld. Voor de individuele boorstaten wordt verwezen naar Bijlage 2 in dit rapport.

Mastvoetlocatie 1027

Masttype	Bipole-steunmast
Centrumcoördinaat	X: 48.931 / Y: 389.113
Hoogteligging	Ca. -1.05 NAP
Grondgebruik	Weiland
Bodemopbouw	Onder de bouwvoor werden in drie van de vier boringen heterogeen verstoorde kleipakketten aangetroffen die gerelateerd kunnen worden aan de veenontginning uit de Late Middeleeuwen (moernering). Men verwijderde eerste de klei die zich boven het veen bevond, waarna met in vaak rechthoekige kuilen het veen begon weg te steken. Van dit Hollandveen bleef slechts een dun, onbruikbaar restlaagje over. Na het wegsteken van het veen werden de turfputten gedempt met de klei die in eerste instantie was weggegraven. Deze klei bevat meestal ook losse veenbrokken en in sommige gevallen ook huishoudelijk afval of overtollig bouwmateriaal. In boring 27.06 werd een nog onaangetast bodemprofiel vastgesteld. Onder een homogene kleilaag (Laagpakket van Walcheren) bevond zich op 0.85 meter –mv (1.90 –NAP) een intacte veentop. Op 1.4 meter –mv (2.45 –NAP) gaat het veenpakket over in slappe blauwe zeeklei (Laagpakket van Wormer).
Archeologie	Er werden in de boringen geen archeologische indicatoren aangetroffen.
Veldkartering	Er was geen veldkartering mogelijk (grasland).
Reliëf	Licht golvend reliëf. Wellicht te wijten aan veenontginning.
Toetsing aan het verwachtingsmodel	Doordat het Laagpakket van Walcheren en het Hollandveen Laagpakket hier wellicht grotendeels verstoord is door veenontginning in de Late Middeleeuwen dient de middelhoge verwachtingswaarde op archeologische vindplaatsen voor deze niveaus bijgesteld te worden naar laag.
Advies	Op basis van de resultaten van het veldonderzoek wordt het niet nodig geacht om ter plaatse van mastvoetlocatie 1027 verder archeologisch onderzoek te laten uitvoeren.

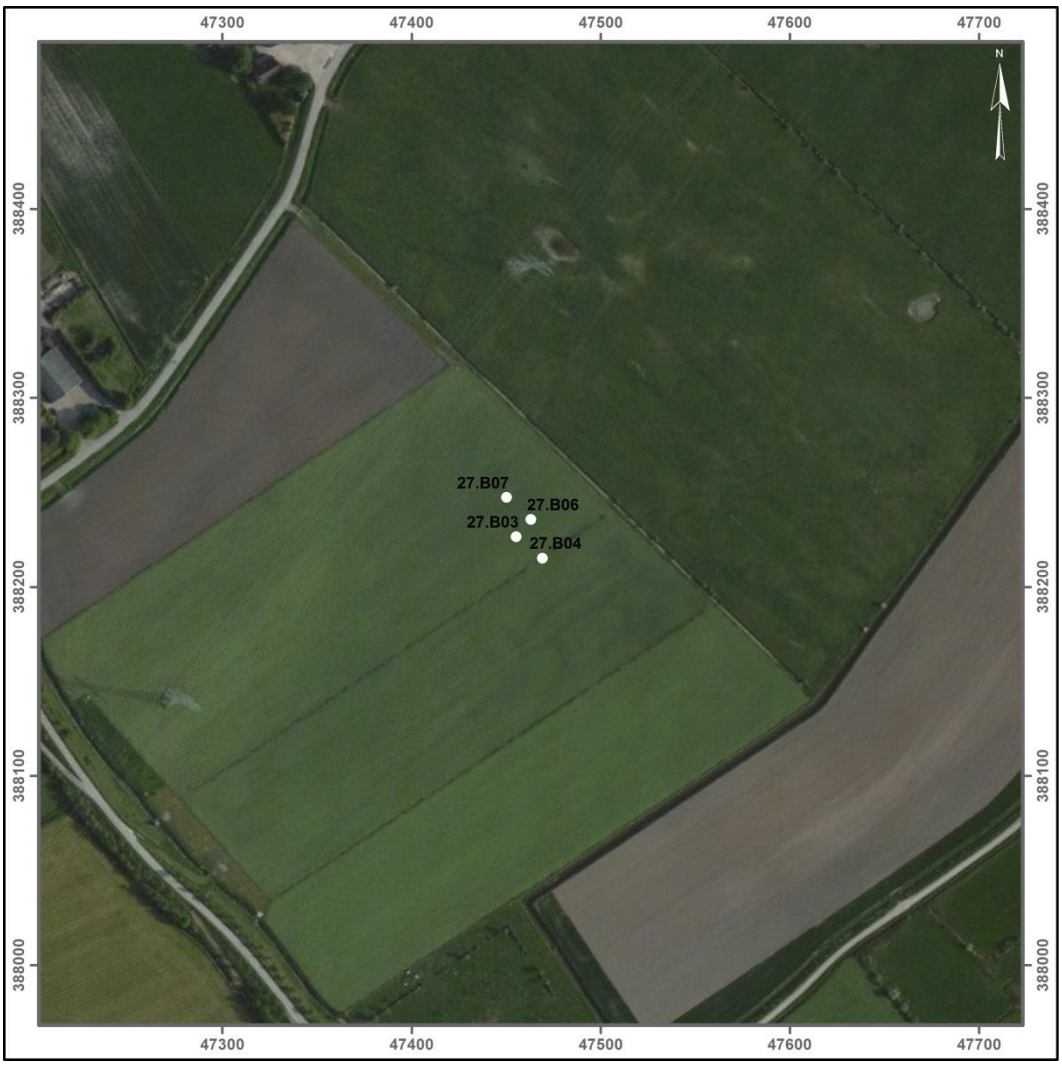

Afbeelding 7. Satellietfoto met hierop de ligging van de boringen ter plaatse van mastvoetlocatie 1027 aangeduid. Schaal 1: 4.000. Bron: ESRI, World Imagery 2014.

Mastvoetlocatie 1028

Masttype	Bipole-hoekmast
Centrumcoördinaat	X: 47.704 / Y: 388.532
Hoogteligging	Ca. -0.95 NAP
Grondgebruik	Weiland
Bodemopbouw	In drie boringen werd moernering vastgesteld. In boring 28.B06 werd de gedempte moerneringsput nadien nog doorsneden door een sloot. In boring 28.B07 bevond het Hollandveen zich veel dieper dan in de andere boringen. De top van dit veen was geërodeerd. Wellicht bevond zich hier een laagte waarin in tot in het sub-Atlanticum veen kon groeien. Na de Romeinse Tijd is deze laagte opnieuw overspoeld door de zee, waardoor hier een smalle restgeul kon ontstaan.
Archeologie	Er werden in de boringen geen archeologische indicatoren aangetroffen.
Veldkartering	Er was geen veldkartering mogelijk (grasland).
Reliëf	Licht golvend reliëf. Wellicht te wijten aan veenontginning. Ter plaatse van 28.B06 is een gedempte perceelssloot waarneembaar.
Toetsing aan het verwachtingsmodel	Doordat het Laagpakket van Walcheren en het Hollandveen Laagpakket verstoord zijn door veenontginning in de Late Middeleeuwen dient de middelhoge verwachtingswaarde op archeologische vindplaatsen voor deze niveaus bijgesteld te worden naar laag.
Advies	Op basis van de resultaten van het veldonderzoek wordt het niet nodig geacht om ter plaatse van mastvoetlocatie 1028 verder archeologisch onderzoek te laten uitvoeren.

Afbeelding 8. Satellietfoto met hierop de ligging van de boringen ter plaatse van mastvoetlocatie 1028 aangeduid. Schaal 1: 4.000. Bron: ESRI, World Imagery 2014.

Mastvoetlocatie 1029

Masttype	Bipole-steunmast
Centrumcoördinaat	X: 47.998 / Y: 388.748
Hoogteligging	Ca. -0.70 NAP
Grondgebruik	Akker
Bodemopbouw	In twee boringen werd een intact bodemprofiel vastgesteld. Hier werd onder een kleipakket (Laagpakket van Walcheren) het Hollandveen aangeboord. De top van het veen bevond zich tussen 1.15 en 1.25 meter –mv (1.88 en 1.97 meter –NAP). Tussen 1.35 en 1.80 –mv (2.08 en 2.52 meter –NAP) ging dit veen over in kleiige afzettingen van het Laagpakket van Wormer. Boring 29.B03 werd ter plaatse van een moerneringskuil gezet. Hier bleef een veenlaagje van 2 cm over. In Boring 29.B07 was het veen geërodeerd door de aanwezigheid van een smalle inbraakgeul. De oudere niveaus waren hier tot 2.5 meter –mv (3.19 meter –NAP) uitgeschuurd.
Archeologie	Er werden in de boringen geen archeologische indicatoren aangetroffen.
Veldkartering	Tijdens de veldkartering werden aan het oppervlak geen indicatoren vastgesteld die zouden kunnen wijzen op de aanwezigheid van een archeologische vindplaats.
Reliëf	Geen uitgesproken reliëf zichtbaar.
Toetsing aan het verwachtingsmodel	In twee boringen (29.B04 en 29.B06) is een intact bodemprofiel aangetroffen. Hier kan de middelhoge verwachtingswaarde gehandhaafd worden. In de twee overige boringen is er een verstoring van de oudere lagen vastgesteld. Bovendien wijst de veldkartering niet in de richting van bewoning uit de Late Middeleeuwen. Hier kan de archeologische verwachting naar beneden toe worden bijgesteld.

Advies	Op basis van de resultaten van het veldonderzoek wordt geadviseerd om ter plaatse van de geplande mastvoet een vervolgonderzoek in de vorm van een Archeologische Begeleiding uit te laten voeren.

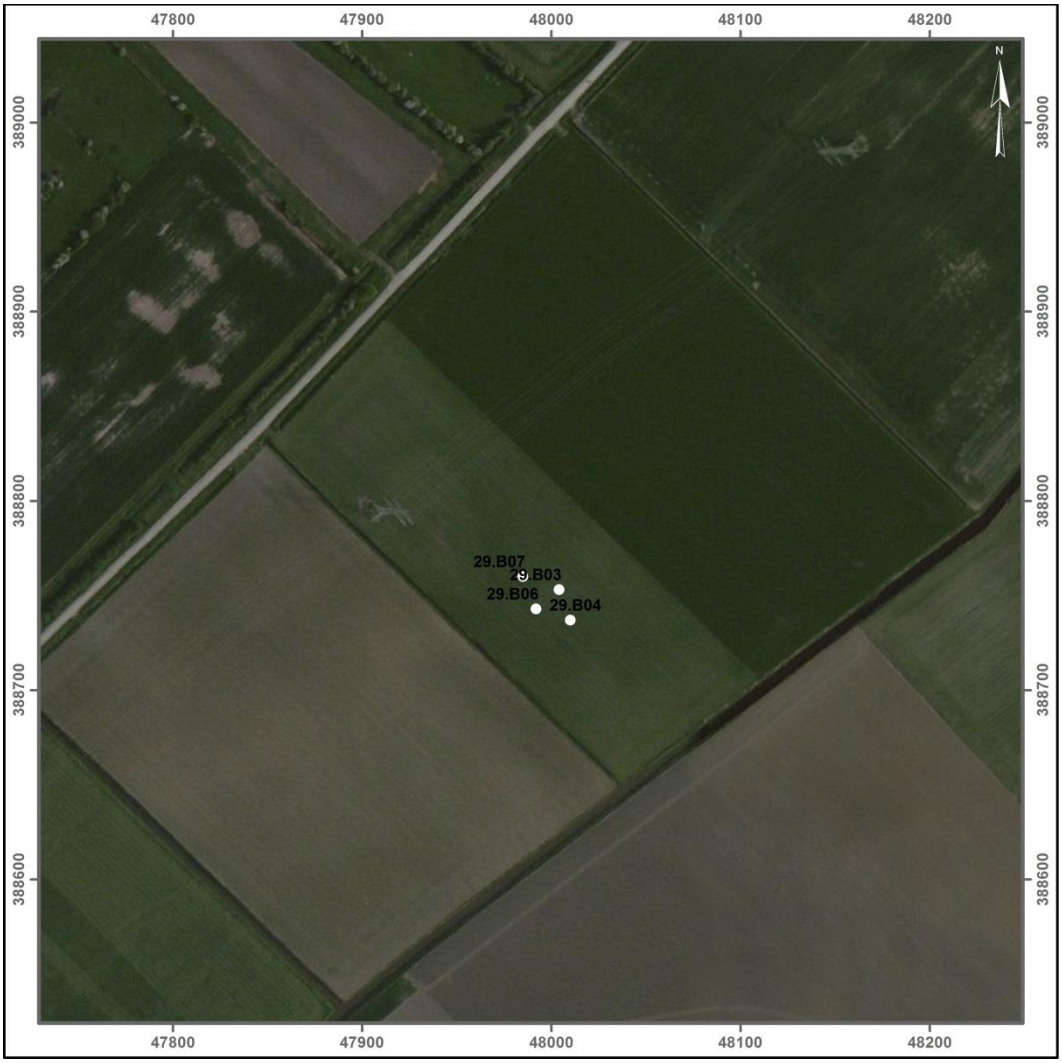

Afbeelding 9. Satellietfoto met hierop de ligging van de boringen ter plaatse van mastvoetlocatie 1029 aangeduid. Schaal 1: 4.000. Bron: ESRI, World Imagery 2014.

Mastvoetlocatie 1030

Masttype	Bipole-steunmast
Centrumcoördinaat	X: 48.293 / Y: 388.966
Hoogteligging	Ca. -0.78 NAP
Grondgebruik	Akker
Bodemopbouw	In twee boringen werden sporen van veenwinningsputten aangeboord. In boring 30.B04 is de vulling van een smalle en ondiepe restgeul vastgesteld. Deze had zich tot in de afzettingen van het Laagpakket van Wormer ingesneden (1.45 meter –mv). In boring 30.B07 werd een intact bodemprofiel vastgesteld. Onder de mariene kleiafzetting van het Laagpakket van Walcheren werd het Hollandveen vastgesteld op een diepte van 0.8 meter –mv (1.58 meter –NAP). Op 1.85 meter –mv (2.63 meter –NAP) gaat het veen over in afzettingen van het Laagpakket van Wormer.
Archeologie	Er werden in de boringen geen archeologische indicatoren aangetroffen.
Veldkartering	Door de begroeiing op de akker (bieten) was geen veldkartering mogelijk.
Reliëf	Geen uitgesproken reliëf zichtbaar.
Toetsing aan het verwachtingsmodel	Het niveau van het Laagpakket van Walcheren en het Hollandveen Laagpakket zijn ter plaatse van deze mastvoetlocatie wellicht grotendeels verstoord. Daarom kan de middelhoge verwachtingswaarde op archeologische vindplaatsen voor deze niveaus bijgesteld te worden naar laag.

Advies	Op basis van de resultaten van het veldonderzoek wordt het niet nodig geacht om ter plaatse van mastvoetlocatie 1030 verder archeologisch onderzoek te laten uitvoeren.

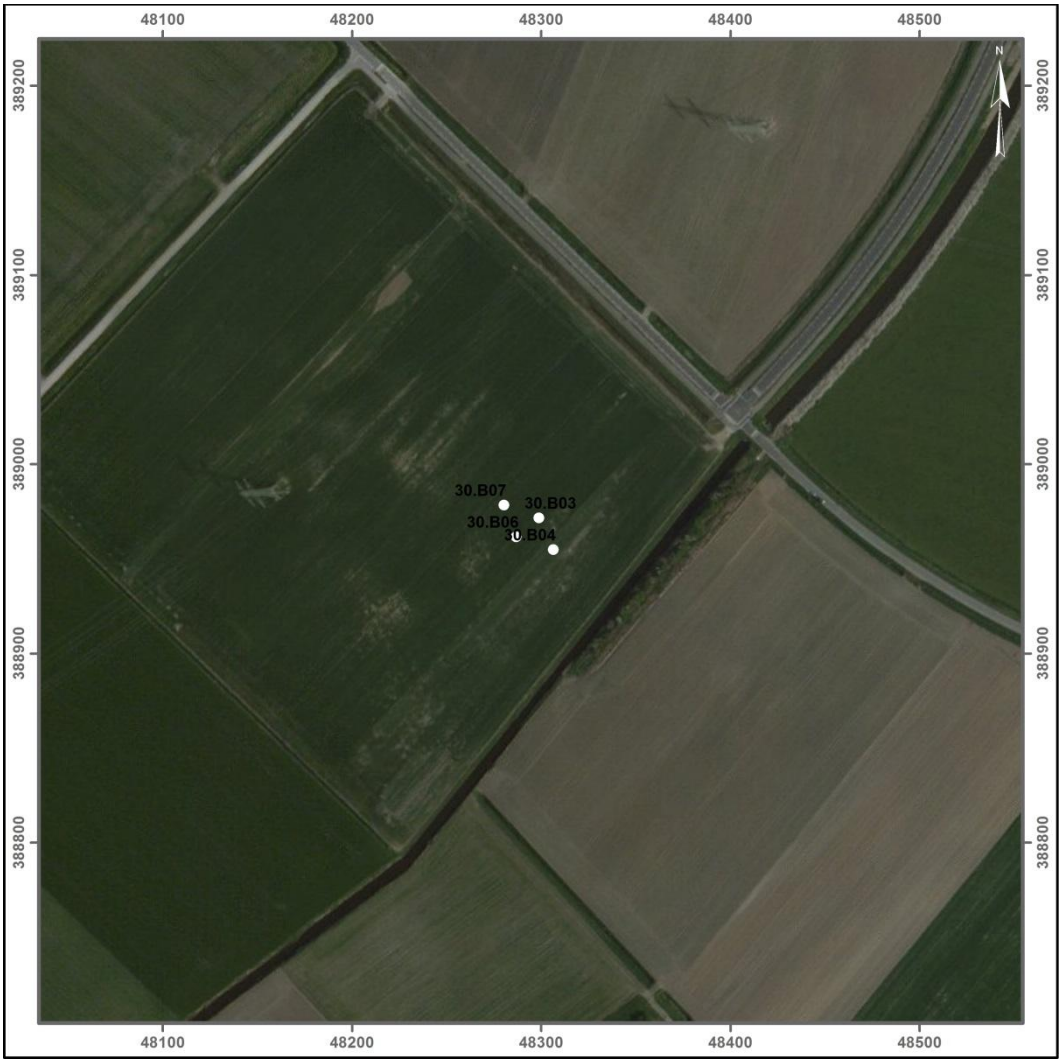

Afbeelding 10. Satellietfoto met hierop de ligging van de boringen ter plaatse van mastvoetlocatie 1030 aangeduid. Schaal 1: 4.000. Bron: ESRI, World Imagery 2014.

Mastvoetlocatie 1031

Masttype	Bipole-hoekmast
Centrumcoördinaat	X: 48.588 / Y: 389.185
Hoogteligging	Ca. -1.15 NAP
Grondgebruik	Weiland
Bodemopbouw	In alle boringen op deze mastvoetlocatie werd verstoring van het bodemprofiel vastgesteld. De toplaag was minimaal tot 0.5 meter –mv vergraven. Hieronder werd in drie boringen restanten van moernering vastgesteld. In boring 31.B04 werd dempingsmateriaal (vml. voor een sloot) waargenomen. De top van de afzettingen van het Laagpakket van Wormer werden aangetroffen op een diepte tussen 1.25 en 1.52 meter –mv (2.38 en 2.60 meter –NAP).
Archeologie	Er werden in de boringen geen archeologische indicatoren aangetroffen.
Veldkartering	Door de begroeiing op het weiland was geen veldkartering mogelijk.
Reliëf	Er was ter plaatse van de mastvoetlocatie geen uitgesproken reliëf zichtbaar.
Toetsing aan het verwachtingsmodel	Het niveau van het Laagpakket van Walcheren en het Hollandveen Laagpakket zijn ter plaatse van deze mastvoetlocatie wellicht grotendeels verstoord. Daarom kan de middelhoge verwachtingswaarde op archeologische vindplaatsen voor deze niveaus bijgesteld te worden naar laag.
Advies	Op basis van de resultaten van het veldonderzoek wordt het niet nodig geacht om ter plaatse van mastvoetlocatie 1031 verder archeologisch onderzoek te laten uitvoeren.

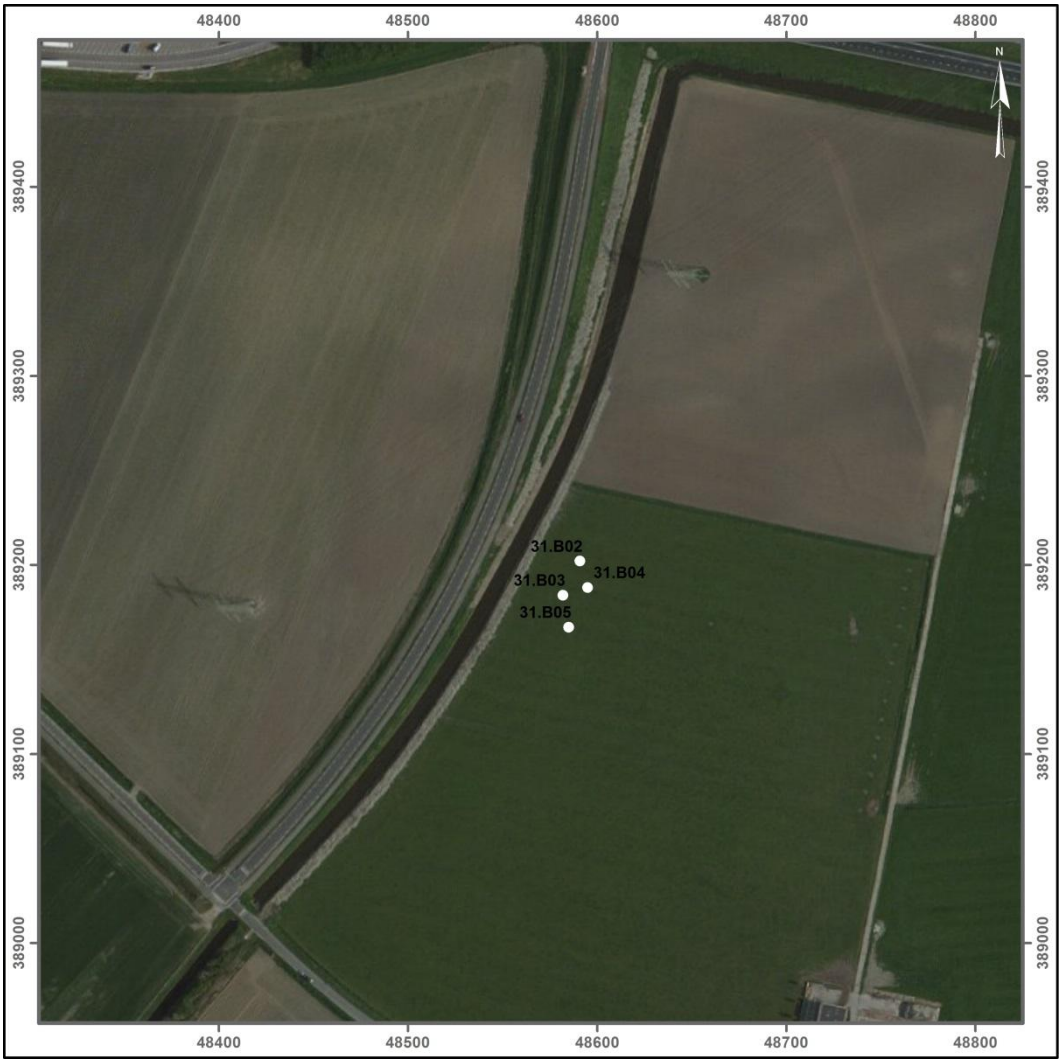

Afbeelding 11.Satellietfoto met hierop de ligging van de boringen ter plaatse van mastvoetlocatie 1031 aangeduid. Schaal 1: 4.000. Bron: ESRI, World Imagery 2014.

Mastvoetlocatie 1032

Masttype	Bipole-steunmast
Centrumcoördinaat	X: 48.931 / Y: 389.113
Hoogteligging	Ca. -1.20 NAP
Grondgebruik	Weiland
Bodemopbouw	In alle boringen op deze mastvoetlocatie werd verstoring van het bodemprofiel vastgesteld. Onder de toplaag werd in drie boringen restanten van moernering vastgesteld. In boring 32.B03 werd dempingsmateriaal van een sloot vastgesteld. De top van de afzettingen van het Laagpakket van Wormer werden aangetroffen op een diepte tussen 1.05 en 1.15 meter –mv (2.31 en 2.33 meter –NAP).
Archeologie	Er werden in de boringen geen archeologische indicatoren aangetroffen.
Veldkartering	Door de begroeiing op het weiland was geen veldkartering mogelijk.
Reliëf	Er was ter plaatse van de mastvoetlocatie geen uitgesproken reliëf zichtbaar.
Toetsing aan het verwachtingsmodel	Het niveau van het Laagpakket van Walcheren en het Hollandveen Laagpakket zijn ter plaatse van deze mastvoetlocatie wellicht grotendeels verstoord. Daarom kan de middelhoge verwachtingswaarde op archeologische vindplaatsen voor deze niveaus bijgesteld te worden naar laag.
Advies	Op basis van de resultaten van het veldonderzoek wordt het niet nodig geacht om ter plaatse van mastvoetlocatie 1032 verder archeologisch onderzoek te laten uitvoeren.

Afbeelding 12. Satellietfoto met hierop de ligging van de boringen ter plaatse van mastvoetlocatie 1032 aangeduid. Schaal 1: 4.000. Bron: ESRI, World Imagery 2014.

Mastvoetlocatie 1033

Masttype	Bipole-steunmast
Centrumcoördinaat	X: 49.284 / Y: 389.038
Hoogteligging	Ca. -1.04 NAP
Grondgebruik	Akker
Bodemopbouw	In drie boringen werd een intact bodemprofiel vastgesteld. Hier werd onder een kleipakket (Laagpakket van Walcheren) het Hollandveen aangeboord. De top van het veen bevond zich tussen 1.00 en 1.25 meter –mv (1.95 en 2.36 meter –NAP). Tussen 1.60 en 1.95 –mv (2.64 en 2.91 meter –NAP) ging dit veen over in kleiige afzettingen van het Laagpakket van Wormer. Opvallend is dat de diepteligging ter plaatse van boring 33.B07 nogal afwijkt van de andere boringen. Boring 33.B02 werd ter plaatse van een moerneringskuil gezet. Hier bleef een veenlaagje van 3 cm over.
Archeologie	In boring 33.B03 werd in het Hollandveen Laagpakket, op een diepte van 1.05 meter –mv (2.11 meter –NAP) een houtskoollaagje aangeboord. In de top van het veen werd in de ruime omgeving van deze mastvoetlocatie al reeds eerder resten uit de Romeinse Tijd aangetroffen (bvb. AMK terrein 13584: Romeinse zoutoventjes). Het is dus waarschijnlijk dat er zich ter plaatse van deze mastvoetlocatie archeologische resten uit deze periode kunnen worden aangetroffen.
Veldkartering	Door de begroeiing op de akker was er geen veldkartering mogelijk.
Reliëf	Er was ter plaatse van de mastvoetlocatie geen uitgesproken reliëf zichtbaar.

Toetsing aan het verwachtingsmodel	In drie boringen (33B03, 33.B06 en 33.B07) is een intact bodemprofiel aangetroffen. Hier kan de middelhoge verwachtingswaarde gehandhaafd worden. In één boring werd op het niveau van het Hollandveen bovendien indicatoren aangetroffen die wijzen in de richting van bewonings- of ontginningssporen. Dit benadrukt en verhoogt zelfs de archeologische verwachtingswaarde ter plaatse van deze mastvoetlocatie. In de overige boring is er een verstoring van de oudere lagen vastgesteld ten gevolge van veenwinning. Hier kan de archeologische verwachting worden bijgesteld naar beneden toe.
Advies	Op basis van de resultaten van het veldonderzoek wordt geadviseerd om ter plaatse van de mastvoetlocatie 1033 een vervolgonderzoek in de vorm van een Archeologische Begeleiding (AB) uit te laten voeren.

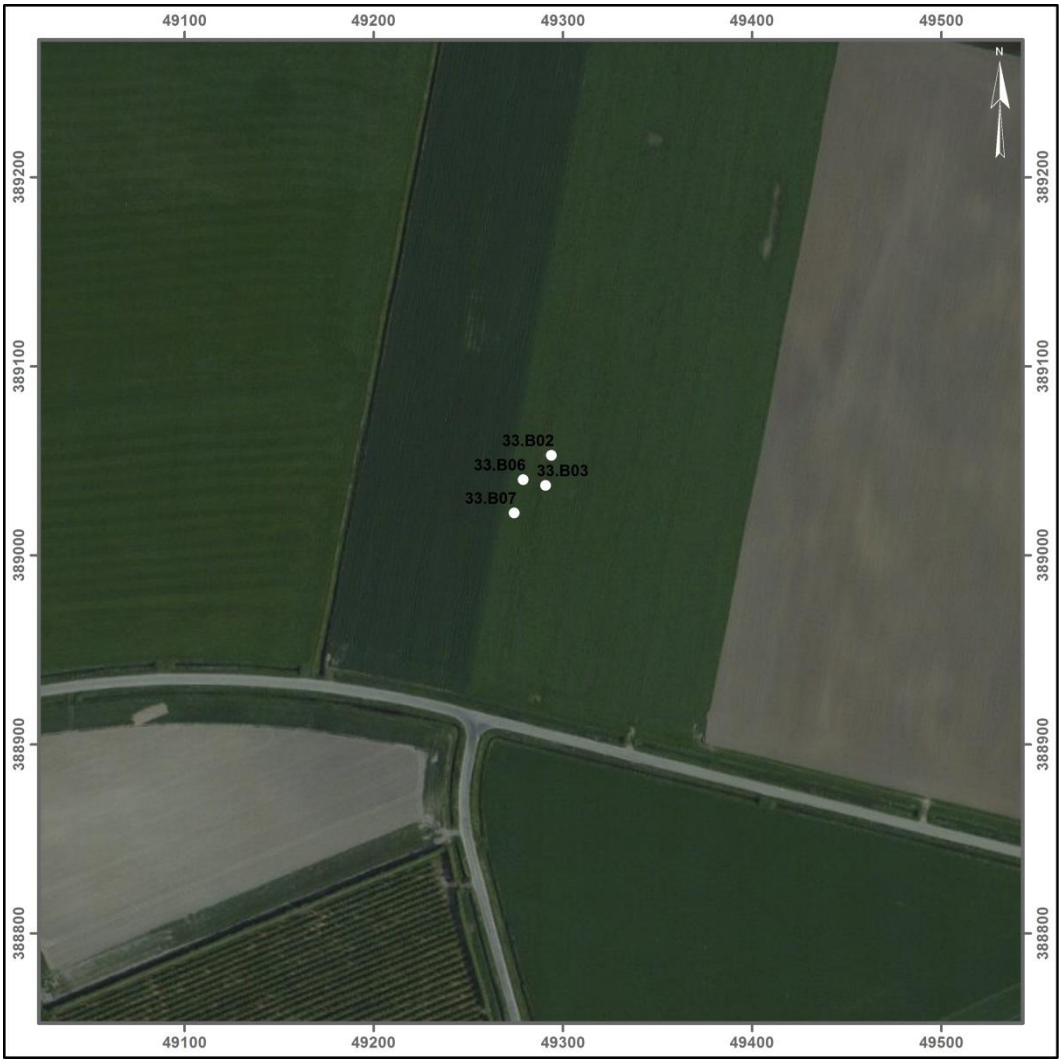

Afbeelding 13. Satellietfoto met hierop de ligging van de boringen ter plaatse van mastvoetlocatie 1033 aangeduid. Schaal 1: 4.000. Bron: ESRI, World Imagery 2014.

Mastvoetlocatie 1034

Masttype	Bipole-steunmast
Centrumcoördinaat	X: 49.641 / Y: 388.962
Hoogteligging	Ca. -1.44 NAP
Grondgebruik	Akker
Bodemopbouw	In alle boringen werd een intact bodemprofiel vastgesteld. Hier werd onder een kleipakket (Laagpakket van Walcheren) het Hollandveen aangeboord. De top van het Hollandveen bevond zich tussen 0.55 en 1.20 meter –mv (2.11 en 2.65 meter –NAP). Tussen 0.85 en 1.35 –mv (2.22 en 2.91 meter –NAP) ging dit veen over in kleiige afzettingen van het Laagpakket van Wormer. In boring 34.B02 werd een oeverwal of een zandruggetje van het Laagpakket van Wormer vastgesteld.
Archeologie	Er werden in de boringen geen archeologische indicatoren aangetroffen.
Veldkartering	Tijdens de veldkartering werden aan het oppervlak geen indicatoren vastgesteld die zouden kunnen wijzen op de aanwezigheid van een archeologische vindplaats.
Reliëf	Er was ter plaatse van de mastvoetlocatie geen uitgesproken reliëf zichtbaar.
Toetsing aan het verwachtingsmodel	In alle boringen is een intact bodemprofiel aangetroffen. De middelhoge verwachtingswaarde kan hier dus gehandhaafd worden. De aanwezigheid van archeologische vindplaatsen op het veen in de omgeving van deze mastvoetlocatie benadrukken deze verwachting.
Advies	Op basis van de resultaten van het veldonderzoek wordt geadviseerd om ter plaatse van de mastvoetlocatie 1034 een vervolgonderzoek in de vorm van een Archeologische Begeleiding (AB) uit te laten voeren.

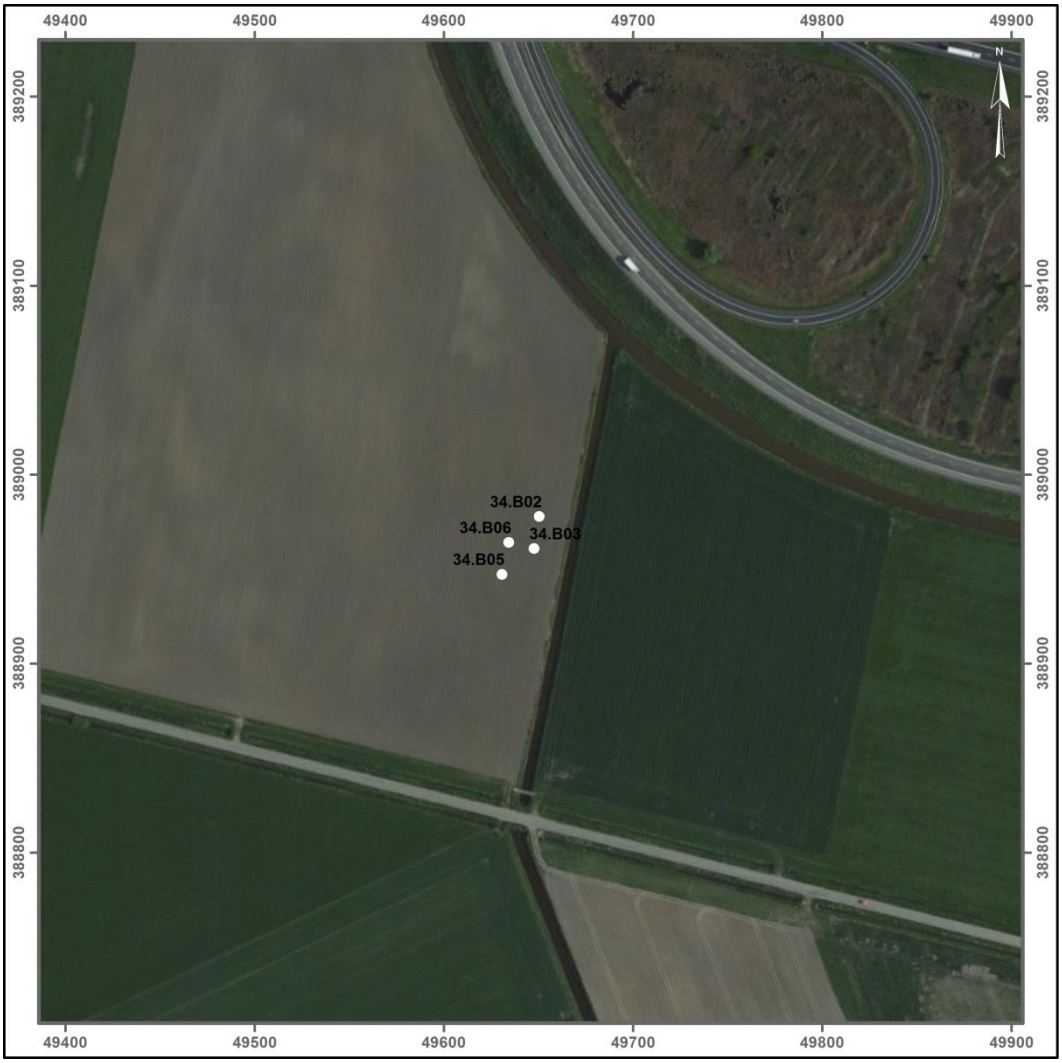

Afbeelding 14. Satellietfoto met hierop de ligging van de boringen ter plaatse van mastvoetlocatie 1034 aangeduid. Schaal 1: 4.000. Bron: ESRI, World Imagery 2014.

Mastvoetlocatie 1035

Masttype	Bipole-steunmast
Centrumcoördinaat	X: 50.006 / Y: 388.885
Hoogteligging	Ca. -1.37 NAP
Grondgebruik	Weiland
Bodemopbouw	In twee boringen (35.B02 en 35.B07) werd een intact bodemprofiel vastgesteld. Hier werd onder een kleipakket (Laagpakket van Walcheren) het Hollandveen aangeboord. De top van het Hollandveen bevond zich op 0.85 meter –mv (2.23 meter –NAP). Tussen 1.45 en 1.60 –mv (2.23 en 2.65 meter –NAP) ging dit veen over in kleiige afzettingen van het Laagpakket van Wormer. In de overige twee boringen werden gedempte veen-winningskuilen aangeboord. Hier bleef een veenrest van 10 tot 30 cm bewaard, met daaronder afzettingen van het Laagpakket van Wormer.
Archeologie	Er werden in de boringen geen archeologische indicatoren aangetroffen.
Veldkartering	Door de begroeiing op het weiland was er het uitvoeren van een veldkartering niet mogelijk.
Reliëf	Geen uitgesproken reliëf zichtbaar.
Toetsing aan het verwachtingsmodel	In twee boringen (35.B02 en 35.B07) is een intact bodemprofiel aangetroffen. Hier kan de middelhoge verwachtingswaarde gehandhaafd worden. In de twee overige boringen is er een verstoring van de oudere niveaus vastgesteld. Hier kan de archeologische verwachting naar beneden toe worden bijgesteld.
Advies	Op basis van de resultaten van het veldonderzoek wordt geadviseerd om ter plaatse van de mastvoetlocatie 1035 een vervolgonderzoek in de vorm van een Archeologische Begeleiding (AB) uit te laten voeren.

Afbeelding 15. Satellietfoto met hierop de ligging van de boringen ter plaatse van mastvoetlocatie 1035 aangeduid. Schaal 1: 4.000. Bron: ESRI, World Imagery 2014.

Mastvoetlocatie 1036

Masttype	Bipole-hoekmast
Centrumcoördinaat	X: 50.393 / Y: 388.804
Hoogteligging	Ca. -1.56 NAP
Grondgebruik	Akker
Bodemopbouw	In alle boringen werd een vrij gelijklopend bodemprofiel vastgesteld. Opvallend is dat de klei behorende tot het Laagpakket van Walcheren werd vergraven tot op het niveau van Hollandveen. De top van het veen was echter wel intact gebleven. De intacte top bevond zich tussen 0.75 en 0.95 meter –mv (2.36 en 2.51 meter –NAP). Tussen 1.20 en 1.40 –mv (2.75 en 3.01 meter –NAP) ging dit veen over in kleiige afzettingen van het Laagpakket van Wormer.
Archeologie	Er werden in de boringen geen archeologische indicatoren aangetroffen.
Veldkartering	Tijdens de veldkartering werden aan het oppervlak geen indicatoren vastgesteld die zouden kunnen wijzen op de aanwezigheid van een archeologische vindplaats. Er werd wel een fragment van een 15de eeuwse steengoedkan gevonden (uit Siegburg (D)).
Reliëf	Er was ter plaatse van de mastvoetlocatie geen uitgesproken reliëf zichtbaar.
Toetsing aan het verwachtingsmodel	In alle boringen werd een intact Hollandveenniveau aangetroffen. De middelhoge verwachtingswaarde voor dit niveau kan dus gehandhaafd worden. De afzettingen van het Laagpakket van Walcheren waren duidelijk verstoord. Op dit niveau vervalt de archeologische verwachting.
Advies	Op basis van de resultaten van het veldonderzoek wordt geadviseerd om ter plaatse van de mastvoetlocatie 1036 een vervolgonderzoek in de vorm van een Archeologische Begeleiding (AB) uit te laten voeren.

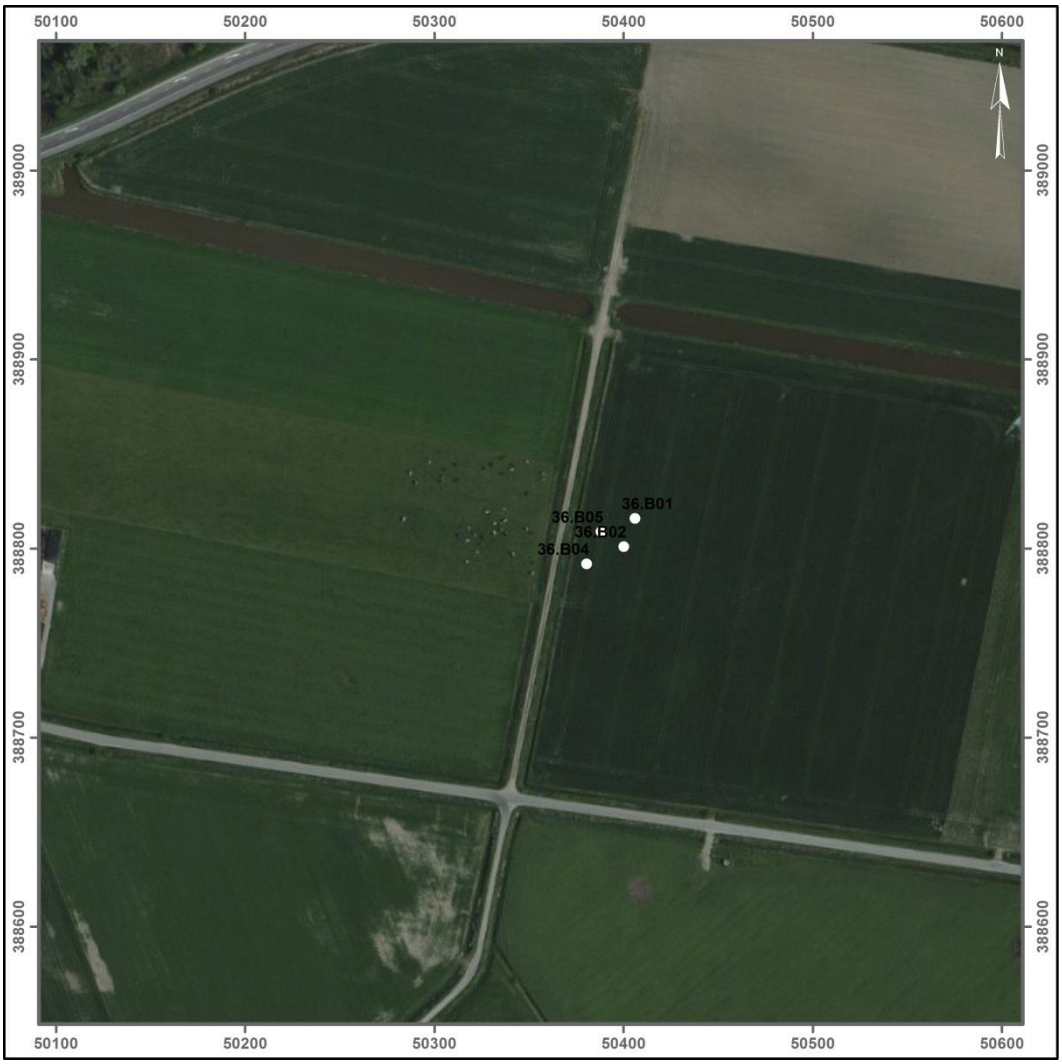

Afbeelding 16. Satellietfoto met hierop de ligging van de boringen ter plaatse van mastvoetlocatie 1036 aangeduid. Schaal 1: 4.000. Bron: ESRI, World Imagery 2014.

Mastvoetlocatie 1037

Masttype	Bipole-steunmast
Centrumcoördinaat	X: 50.677 / Y: 388.580
Hoogteligging	Ca. -1.03 NAP
Grondgebruik	Weiland
Bodemopbouw	In alle boringen op deze mastvoetlocatie werd verstoring van het bodemprofiel vastgesteld. Onder de toplaag werd in de boringen restanten van veenontginning vastgesteld. Zowel het laagpakket van Walcheren, als het Hollandveen bleken te zijn vergraven. Van het veen bleef slechts een restant van circa 5 cm bewaard. De top van de afzettingen van het Laagpakket van Wormer werden aangetroffen op een diepte tussen 1.65 en 2.08 meter –mv (2.59 en 3.09 meter –NAP).
Archeologie	Er werden in de boringen geen archeologische indicatoren aangetroffen.
Veldkartering	Door de begroeiing op het weiland was het uitvoeren van een veldkartering niet mogelijk.
Reliëf	Er was ter plaatse van de mastvoetlocatie geen uitgesproken reliëf zichtbaar.
Toetsing aan het verwachtingsmodel	Het niveau van het Laagpakket van Walcheren en het Hollandveen Laagpakket zijn ter plaatse van deze mastvoetlocatie wellicht grotendeels verstoord. Daarom kan de middelhoge verwachtingswaarde op archeologische vindplaatsen voor deze niveaus bijgesteld te worden naar laag.
Advies	Op basis van de resultaten van het veldonderzoek wordt het niet nodig geacht om ter plaatse van mastvoetlocatie 1037 verder archeologisch onderzoek te laten uitvoeren.

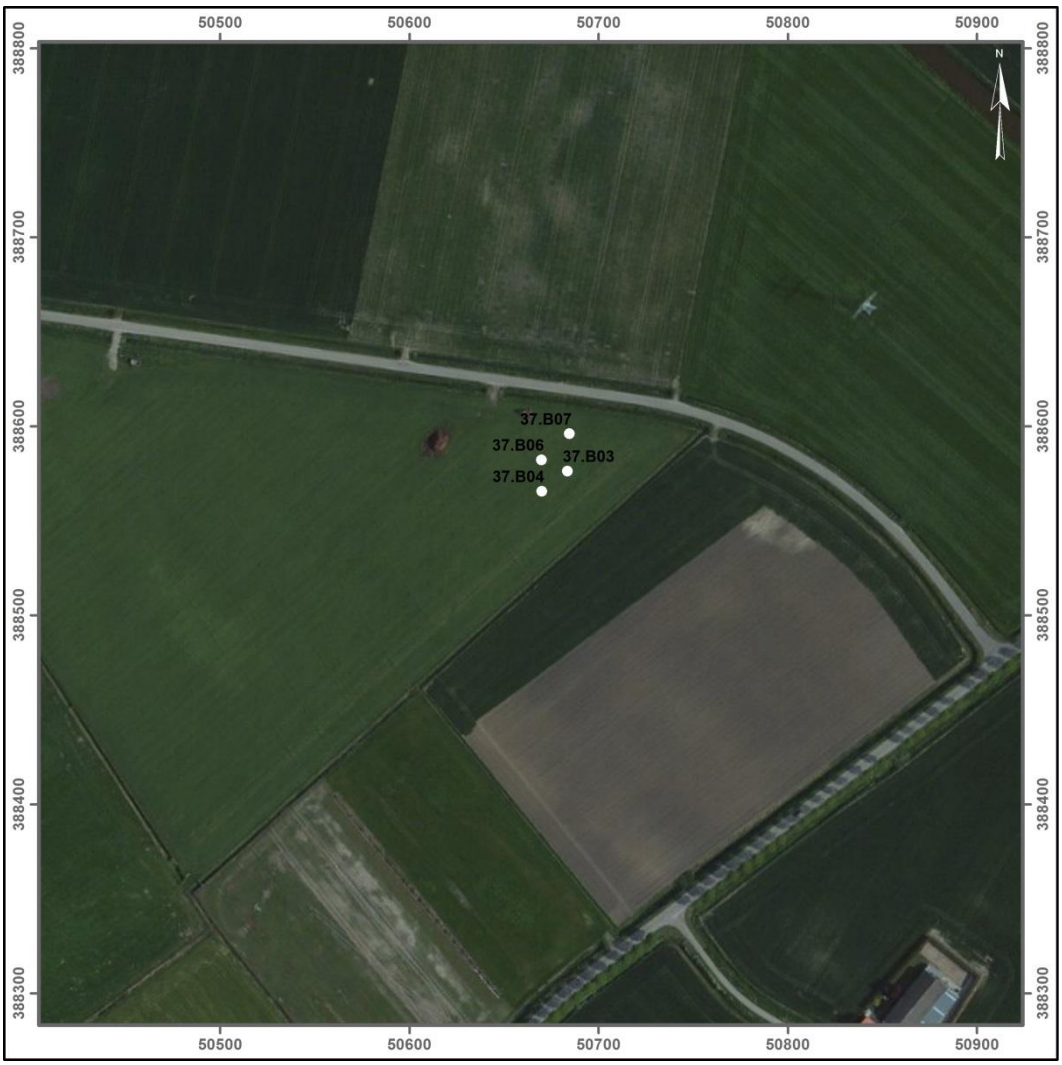

Afbeelding 17. Satellietfoto met hierop de ligging van de boringen ter plaatse van mastvoetlocatie 1037 aangeduid. Schaal 1: 4.000. Bron: ESRI, World Imagery 2014.

Mastvoetlocatie 1038

Masttype	Bipole-steunmast
Centrumcoördinaat	X: 50.935 / Y: 388.378
Hoogteligging	Ca. -0.70 NAP
Grondgebruik	Akker
Bodemopbouw	In twee boringen (38.B06 en 38.B07) werd een intact bodemprofiel vastgesteld. Hier werd onder een kleipakket (Laagpakket van Walcheren) het Hollandveen aangeboord. De top van het veen bevond zich hier tussen 1.15 en 1.25 meter –mv (1.88 en 1.97 meter –NAP). Tussen 1.75 en 2.05 –mv (2.72 en 3.03 meter –NAP) ging dit veen over in kleiige afzettingen van het Laagpakket van Wormer. In de twee overige boringen werden sporen van moernering aangeboord.
Archeologie	Er werden in de boringen geen archeologische indicatoren aangetroffen.
Veldkartering	Door de begroeiing op de akker (tarwe) kon er geen veldkartering worden uitgevoerd.
Reliëf	Geen uitgesproken reliëf zichtbaar.
Toetsing aan het verwachtingsmodel	In twee boringen (38.B06 en 38.B07) is een intact bodemprofiel aangetroffen. Hier kan de middelhoge verwachtingswaarde gehandhaafd worden. In de twee overige boringen werden sporen van veenontginning waargenomen. Hier zijn zowel het Hollandveen als het Laagpakket van Walcheren verstoord en kan de archeologische verwachting naar beneden worden bijgesteld.
Advies	Op basis van de resultaten van het veldonderzoek wordt geadviseerd om ter plaatse van de mastvoetlocatie 1038 een vervolgonderzoek in de vorm van een Archeologische Begeleiding (AB) uit te laten voeren.

Afbeelding 18. Satellietfoto met hierop de ligging van de boringen ter plaatse van mastvoetlocatie 1038 aangeduid. Schaal 1: 4.000. Bron: ESRI, World Imagery 2014.

Mastvoetlocatie 1039

Masttype	Bipole-steunmast
Centrumcoördinaat	X: 51.200 / Y: 388.170
Hoogteligging	Ca. -0.56 NAP
Grondgebruik	Akker
Bodemopbouw	In twee boringen (39.B04 en 39.B06) werd een intact bodemprofiel vastgesteld. Hier werd onder een kleipakket (Laagpakket van Walcheren) het Hollandveen aangeboord. De top van het veen bevond zich hier tussen 1.00 en 1.25 meter –mv (1.51 en 1.80 meter –NAP). Tussen 2.10 en 2.65 –mv (2.65 en 3.23 meter –NAP) ging dit veen over in kleiige afzettingen van het Laagpakket van Wormer. In boring 39.B03 is moernering vastgesteld. In boring 39.B07 was de top van Holland-veen geërodeerd door een jongere geul.
Archeologie	Er werden in de boringen geen archeologische indicatoren aangetroffen.
Veldkartering	Door de begroeiing op de akker (bonen) kon er geen veldkartering worden uitgevoerd.
Reliëf	Op het terrein is geen duidelijk reliëf waar te nemen.
Toetsing aan het verwach-tingsmodel	In twee boringen (39.B04 en 39.B06) is een intact bodemprofiel aangetroffen. Hier kan de middelhoge verwachtingswaarde gehandhaafd worden. In de twee overige boringen werd een verstoring van de oudere niveaus vastgesteld, waardoor de archeologische verwachting hier naar benden kan worden bijgesteld.
Advies	Op basis van de resultaten van het veldonderzoek wordt geadviseerd om ter plaatse van de mastvoetlocatie 1039 een vervolgonderzoek in de vorm van een Archeologische Begeleiding (AB) uit te laten voeren.

Afbeelding 19. Satellietfoto met hierop de ligging van de boringen ter plaatse van mastvoetlocatie 1039 aangeduid. Schaal 1: 4.000. Bron: ESRI, World Imagery 2014.

Mastvoetlocatie 1039A

Masttype	Bipole-hoekmast
Centrumcoördinaat	X: 51.450 / Y: 387.963
Hoogteligging	Ca. -0.13 NAP
Grondgebruik	Akker
Bodemopbouw	In alle boringen werden erosieve afzettingen van het Laagpakket van Walcheren aangeboord. Deze afzettingen zijn opgebouwd uit een laminatie van zand en kleilaagjes. Onderin worden meestal laagjes geërodeerd veen aangetroffen. Bij boring 39A.B03 is de erosie wellicht vrij beperkt, aangezien onder de mariene afzettingen nog een geoxideerde veentop werd aangetroffen. In de overige boringen werd deze top niet meer vastgesteld. Het veen werd aangetroffen op een diepte tussen 1.85 en 2.10 meter –mv (1.76 en 2.24 meter –NAP). Onder het Hollandveen werden afzettingen van het Laagpakket van Wormer aangetroffen. De top van deze afzettingen bevindt zich hier tussen 2.30 en 2.55 meter –mv (2.36 en 2.69 meter –NAP). De beperkte erosie van het veenniveau en de vrij hoge ligging (t.o.v. de omgeving) kan verklaard worden door de nabijheid van een brede inbraakgeul. Hier bevindt zich wellicht de oeverzone van de geul.
Archeologie	Er werden in de boringen geen archeologische indicatoren aangetroffen.
Veldkartering	Tijdens de veldkartering werden aan het oppervlak geen indicatoren vastgesteld die zouden kunnen wijzen op de aanwezigheid van een archeologische vindplaats.
Reliëf	Er is geen uitgesproken reliëf waar te nemen.
Toetsing aan het verwachtingsmodel	Het Laagpakket van Walcheren lijkt vrij intact bewaard te zijn. Er zijn echter tijdens de veldkartering en het booronderzoek geen duidelijke indicatoren voor bewoning uit de Middeleeuwen of de Nieuwe Tijd gevonden. Op het niveau van het Hollandveen is er in alle boringen erosie van de top vastgesteld. Om deze redenen kan de middelhoge verwachting op de aanwezigheid van vindplaatsen naar beneden bijgesteld worden.
Advies	Op basis van de resultaten van het veldonderzoek wordt het niet nodig geacht om ter plaatse van mastvoetlocatie 1039A verder archeologisch onderzoek te laten uitvoeren.

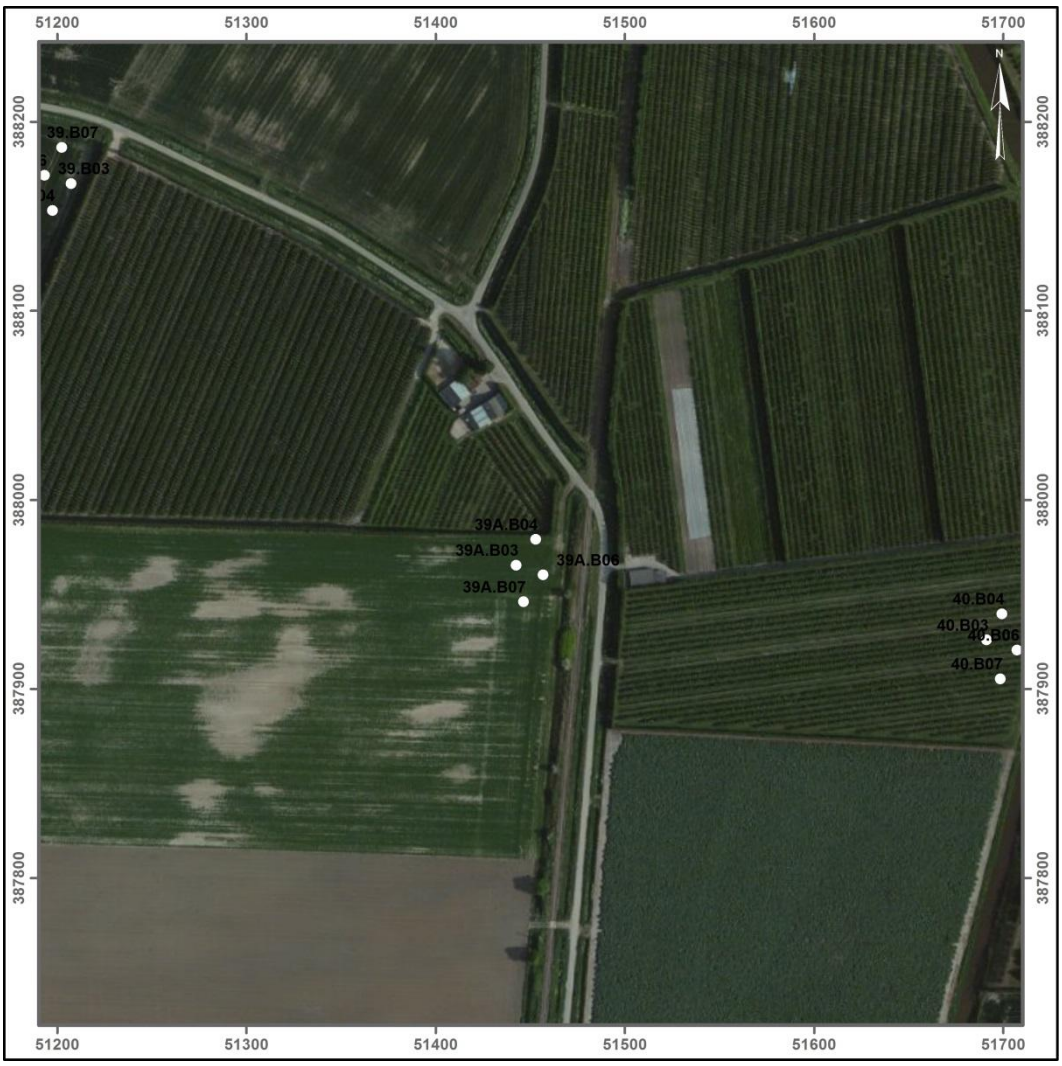

Afbeelding 20. Satellietfoto met hierop de ligging van de boringen ter plaatse van mastvoetlocatie 1039A aangeduid. Schaal 1: 4.000. Bron: ESRI, World Imagery 2014.

Mastvoetlocatie 1040

Masttype	Bipole-steunmast
Centrumcoördinaat	X: 51.699 / Y: 387.923
Hoogteligging	Ca. -0.22 NAP
Grondgebruik	Boomgaard
Bodemopbouw	In alle boringen werden diepreikende geulafzettingen van het Laagpakket van Walcheren aangeboord. De top van dit laagpakket bleek verstoord te zijn tot op een diepte van minimaal 0.75 meter –mv. Deze verstoring is wellicht te verklaren door het gebruik van dit terrein als boomgaard. Onder deze verstoring werden intacte afzettingen van het Lp. van Walcheren aangeboord. Deze afzettingen zijn opgebouwd uit een laminatie van zand en kleilaagjes. Onderin worden meestal laagjes geërodeerd veen aangetroffen. De bedding van deze inbraakgeul heeft de oudere afzettingen tot minimaal 4 meter –mv weggeslagen.
Archeologie	Er werden in de boringen geen archeologische indicatoren aangetroffen.
Veldkartering	Er was geen veldkartering mogelijk (boomgaard).
Reliëf	Er is geen uitgesproken reliëf waar te nemen.
Toetsing aan het verwachtingsmodel	Doordat er verstoring is vastgesteld van de top van het Laagpakket van Walcheren tot minimaal 0.75 meter –mv, kan de middelhoge archeologische verwachting op dit niveau worden bijgesteld naar laag. Door het ontbreken van oudere niveaus in het boorprofiel kan verondersteld worden dat deze tot minimaal 4 meter –mv geërodeerd zijn. Hierdoor vervalt de archeologische verwachting op de overige archeologische niveaus.
Advies	Op basis van de resultaten van het veldonderzoek wordt het niet nodig geacht om ter plaatse van mastvoetlocatie 1040 verder archeologisch onderzoek te laten uitvoeren.

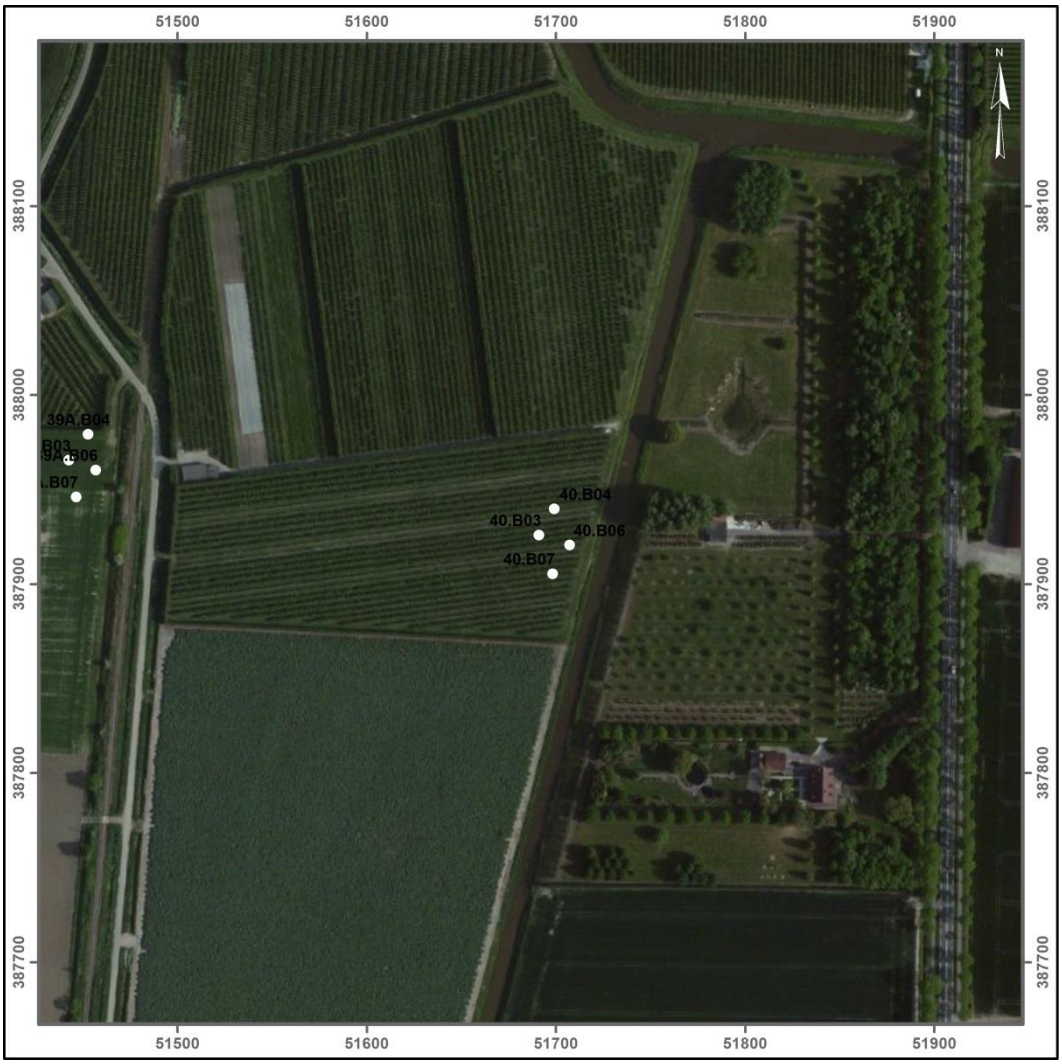

Afbeelding 21. Satellietfoto met hierop de ligging van de boringen ter plaatse van mastvoetlocatie 1040 aangeduid. Schaal 1: 4.000. Bron: ESRI, World Imagery 2014.

Mastvoetlocatie 1041

Masttype	Bipole-steunmast
Centrumcoördinaat	X: 52.080 / Y: 387.859
Hoogteligging	Ca. 0.85 NAP
Grondgebruik	Akker
Bodemopbouw	In alle boringen werden diepreikende geulafzettingen van het Laagpakket van Walcheren aangeboord. Deze afzettingen zijn opgebouwd uit een laminatie van zand en kleilaagjes. Onderin worden meestal laagjes geërodeerd veen aangetroffen. De bedding van deze inbraakgeul heeft de oudere afzettingen tot minimaal 2.5 meter –mv weggeslagen. Gezien de vrij hoge hoogteligging bevindt deze locatie zich op een kreekrug.
Archeologie	Er werden in de boringen geen archeologische indicatoren aangetroffen.
Veldkartering	Bij de veldkartering werd wel een redelijke hoeveelheid aardewerk uit de periode 1800-1940 gevonden. Het ontbreken van bouwpuin laat echter toe te concluderen dat het hier bemestingsmateriaal betreft. Er werd geen middeleeuws aardewerk gevonden
Reliëf	Er is geen uitgesproken reliëf waar te nemen. Circa 300 meter ten noorden van deze planlocatie ligt een middeleeuwse kasteelberg.
Toetsing aan het verwachtingsmodel	Het Laagpakket van Walcheren is intact. Echter, noch in de boringen, noch aan het maaiveld werden duidelijke indicatoren voor bewoning uit de Middeleeuwen of de Nieuwe Tijd gevonden. Op het niveau van het Hollandveen is er in alle boringen erosie van de top vastgesteld. Om deze redenen kan de middelhoge verwachting op de aanwezigheid van archeologische vindplaatsen naar beneden bijgesteld worden.
Advies	Op basis van de resultaten van het veldonderzoek wordt het niet nodig geacht om ter plaatse van mastvoetlocatie 1041 verder archeologisch onderzoek te laten uitvoeren.

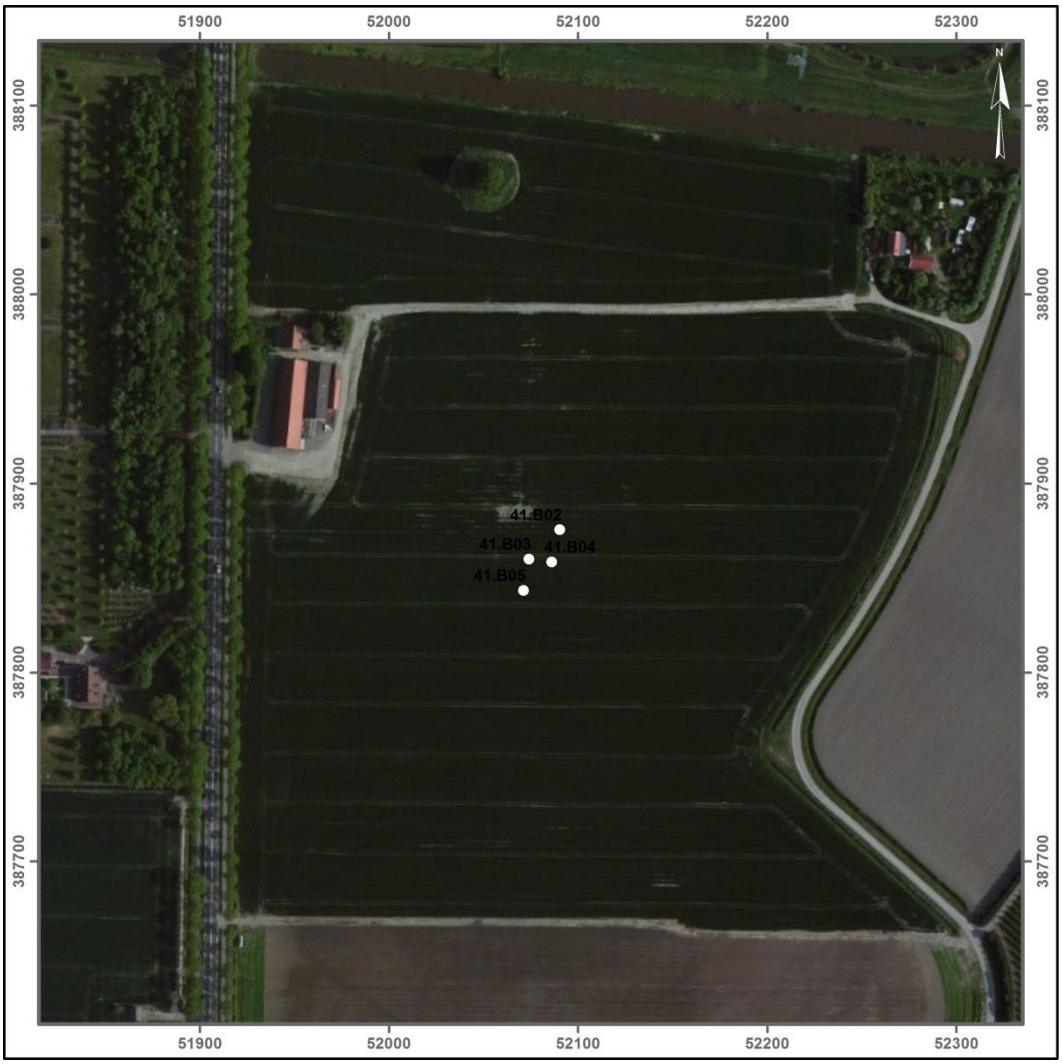

Afbeelding 22. Satellietfoto met hierop de ligging van de boringen ter plaatse van mastvoetlocatie 1041 aangeduid. Schaal 1: 4.000. Bron: ESRI, World Imagery 2014.

Mastvoetlocatie 1042

Masttype	Bipole-steunmast
Centrumcoördinaat	X: 52.460 / Y: 387.797
Hoogteligging	Ca. 0.6 NAP
Grondgebruik	Boomgaard
Bodemopbouw	In alle boringen werden erosieve afzettingen van het Laagpakket van Walcheren aangeboord. Deze afzettingen zijn opgebouwd uit een laminatie van zand en kleilaagjes. Onderin worden meestal laagjes geërodeerd veen aangetroffen. Bij boring 42.B07 is de erosie wellicht vrij beperkt, aangezien onder de mariene afzettingen nog een geoxideerde veentop werd aangetroffen. In de overige boringen werd deze top niet meer vastgesteld. Het veen werd aangetroffen op een diepte tussen 2.05 en 2.85 meter –mv (2.11 en 2.69 meter –NAP). Onder het Hollandveen werden afzettingen van het Laagpakket van Wormer aangetroffen. De top van deze afzettingen bevindt zich hier tussen 2.95 en 3.95 meter –mv (3.01 en 3.81 meter –NAP). De beperkte erosie van het veenniveau en de vrij hoge ligging (t.o.v. de omgeving) kan verklaard worden door de nabijheid van een brede inbraakgeul.
Archeologie	Er werden in de boringen geen archeologische indicatoren aangetroffen.
Veldkartering	Er was geen veldkartering mogelijk (boomgaard).
Reliëf	Er is geen uitgesproken reliëf waar te nemen.
Toetsing aan het verwachtingsmodel	Het Laagpakket van Walcheren lijkt vrij intact bewaard te zijn. Er kon geen veldkartering worden uitgevoerd. Daarom moet de middelhoge verwachting gehandhaafd blijven. Op het niveau van het Hollandveen is er in drie boringen erosie van de top vastgesteld. Om deze redenen kan hier de middelhoge verwachting op de aanwezigheid van vindplaatsen naar beneden bijgesteld worden. In 42.B07 werd een intact veenprofiel vastgesteld. Hier blijft ook de middelhoge verwachting op dit niveau aanwezig.
Advies	Op basis van de resultaten van het veldonderzoek wordt geadviseerd om ter plaatse van de mastvoetlocatie 1042 een vervolgonderzoek in de vorm van een Archeologische Begeleiding (AB) uit te laten voeren.

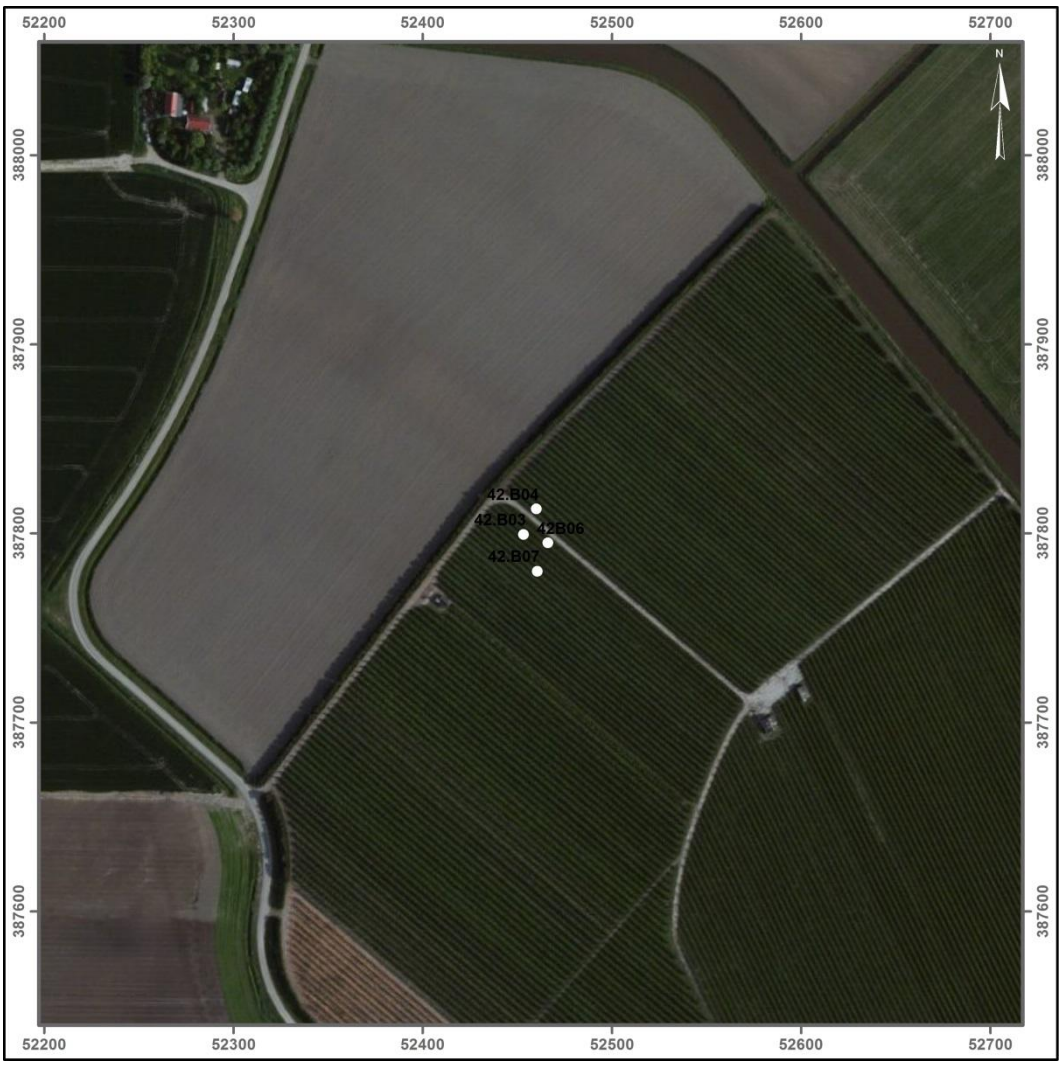

Afbeelding 23. Satellietfoto met hierop de ligging van de boringen ter plaatse van mastvoetlocatie 1042 aangeduid. Schaal 1: 4.000. Bron: ESRI, World Imagery 2014.

Mastvoetlocatie 1043

Masttype	Bipole-steunmast
Centrumcoördinaat	X: 52.460 / Y: 387.797
Hoogteligging	Ca. 0.6 NAP
Grondgebruik	Akker
Bodemopbouw	In alle boringen werden erosieve afzettingen van het Laagpakket van Walcheren aangeboord. In boring 43.B07 konden geen diepere lagen worden aangeboord. Het veen werd in de overige drie boringen vrij diep aangetroffen, namelijk op een diepte tussen 2.40 en 2.95 meter –mv (2.82 en 3.31 meter –NAP). Onder het Hollandveen werden afzettingen van het Laagpakket van Wormer aangetroffen. De top van deze afzettingen bevindt zich hier tussen 3.50 en 3.65 meter –mv (3.92 en 3.96 meter –NAP).
Archeologie	Er werden in de boringen geen archeologische indicatoren aangetroffen.
Veldkartering	Door de begroeiing op de akker (bieten) kon er geen veldkartering worden uitgevoerd.
Reliëf	Er is geen uitgesproken reliëf waar te nemen.
Toetsing aan het verwachtingsmodel	Het Laagpakket van Walcheren lijkt vrij intact bewaard te zijn. Er kon geen veldkartering worden uitgevoerd. Daarom moet de middelhoge verwachting gehandhaafd blijven. Op het niveau van het Hollandveen is er in alle boringen erosie van de top vastgesteld. Om deze redenen kan hier de middelhoge verwachting op de aanwezigheid van vindplaatsen naar beneden bijgesteld worden.
Advies	Op basis van de resultaten van het veldonderzoek wordt geadviseerd om ter plaatse van de mastvoetlocatie 1043 een vervolgonderzoek in de vorm van een Archeologische Begeleiding (AB) uit te laten voeren.

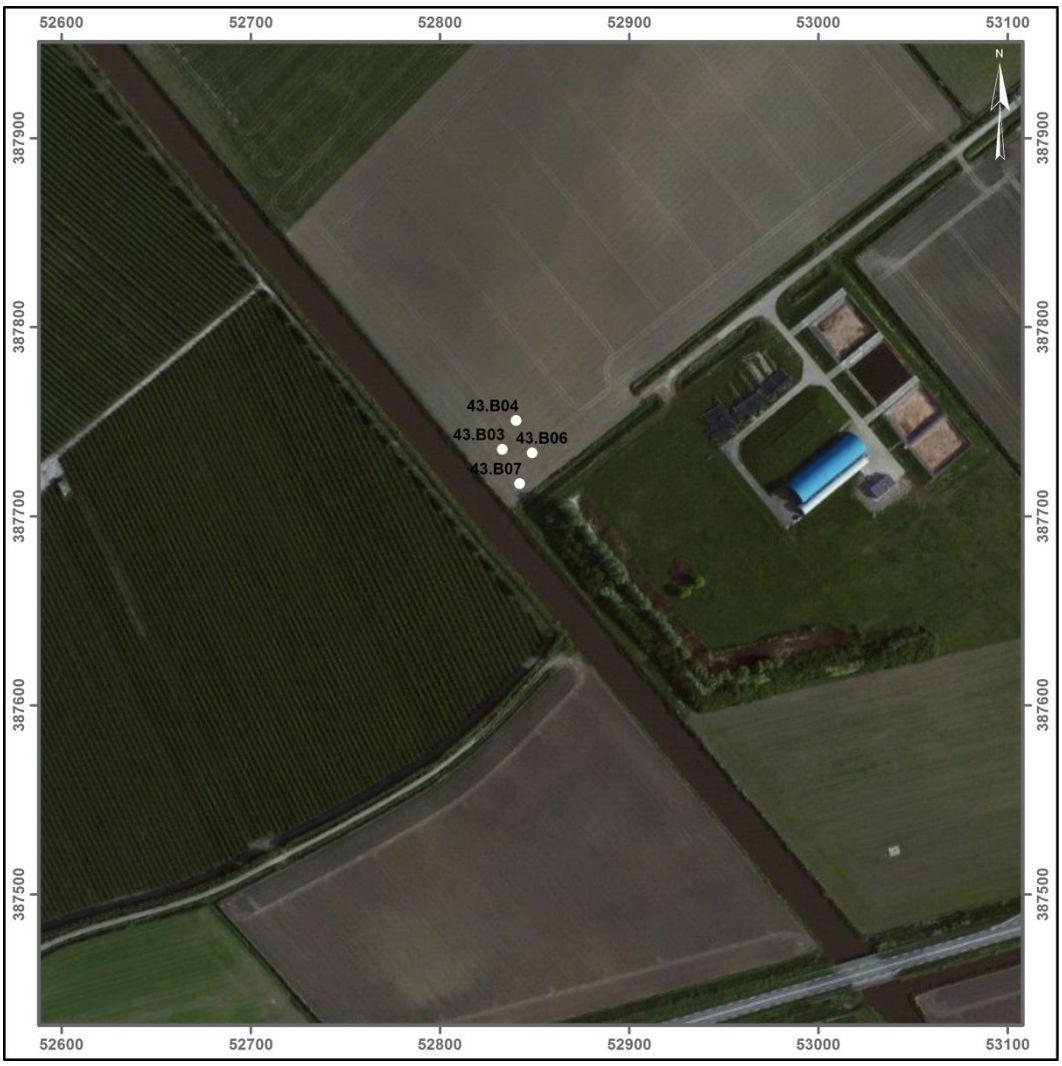

Afbeelding 24. Satellietfoto met hierop de ligging van de boringen ter plaatse van mastvoetlocatie 1043 aangeduid. Schaal 1: 4.000. Bron: ESRI, World Imagery 2014.

Mastvoetlocatie 1044

Masttype	Bipole-steunmast
Centrumcoördinaat	X: 53.192 / Y: 387.678
Hoogteligging	Ca. -1.05 NAP
Grondgebruik	Akker
Bodemopbouw	In drie boringen (boringen 44.B03, 44.B04 en 44.B07) werd een intact bodemprofiel vastgesteld. Hier werd onder een kleipakket (Laagpakket van Walcheren) het Hollandveen aangeboord. Bij boring 44.B07 was de klei evenwel duidelijk vergraven. De top van het veen bevond zich tussen 0.85 en 1.20 meter –mv (1.64 en 2.12 meter –NAP). Tussen 1.60 en 2.20 –mv (2.52 en 2.94 meter –NAP) ging dit veen over in kleiige afzettingen van het Laagpakket van Wormer. Boring 44.B06 werd ter plaatse van een moerneringskuil gezet. Hier bleef een veenlaagje van 5 cm over.
Archeologie	Er werden in de boringen geen archeologische indicatoren aangetroffen.
Veldkartering	Tijdens de veldkartering werden aan het oppervlak geen indicatoren vastgesteld die zouden kunnen wijzen op de aanwezigheid van een archeologische vindplaats.
Reliëf	Licht golvend reliëf. Wellicht te wijten aan veenontginning.
Toetsing aan het verwachtingsmodel	In drie boringen (44.B03, 44.B04 en 44.B07) is een intact bodemprofiel aangetroffen. Hier kan de middelhoge verwachtingswaarde gehandhaafd worden. In de overige boring is er een verstoring van de oudere lagen vastgesteld. Bovendien wijst de veldkartering niet in de richting van bewoning uit de Late Middeleeuwen. Hier kan de archeologische verwachting naar beneden toe worden bijgesteld.

Advies	Op basis van de resultaten van het veldonderzoek wordt geadviseerd om ter plaatse van de mastvoetlocatie 1044 een vervolgonderzoek in de vorm van een Archeologische Begeleiding (AB) uit te laten voeren.

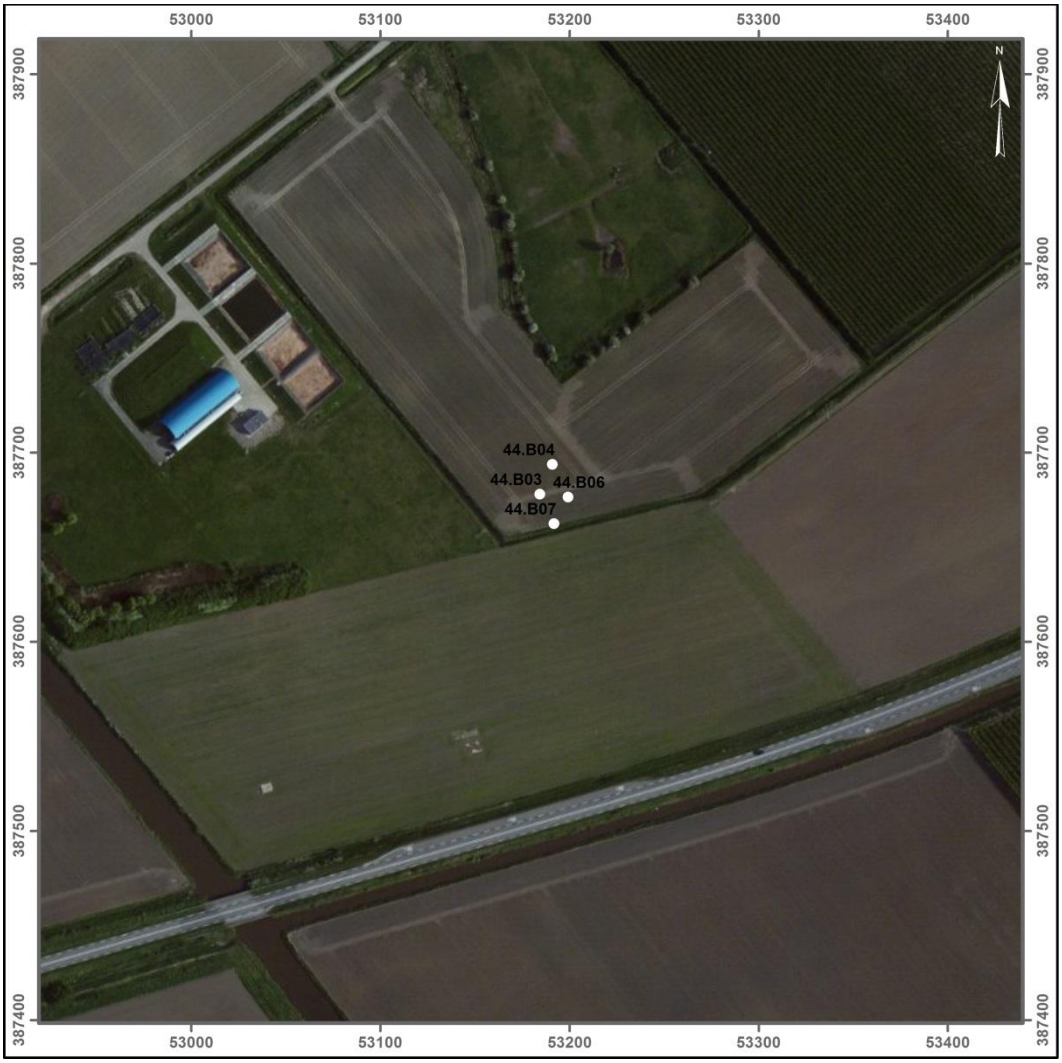

Afbeelding 25. Satellietfoto met hierop de ligging van de boringen ter plaatse van mastvoetlocatie 1044 aangeduid. Schaal 1: 4.000. Bron: ESRI, World Imagery 2014.

Mastvoetlocatie 1045

Masttype	Bipole-steunmast
Centrumcoördinaat	X: 53.586 / Y: 387.612
Hoogteligging	Ca. -0.52 NAP
Grondgebruik	Akker
Bodemopbouw	In alle boringen op deze mastvoetlocatie werd verstoring van het bodemprofiel vastgesteld. Onder de toplaag werden restanten van moernering vastgesteld. Onder de vergraven klei werden een veenrestant van circa 10 cm dik aangeboord. De top van de afzettingen van het Laagpakket van Wormer werden aangetroffen op een diepte tussen 2.05 en 2.23 meter –mv (2.56 en 2.8 meter –NAP).
Archeologie	Er werden in de boringen geen archeologische indicatoren aangetroffen.
Veldkartering	Door de tarwestoppels op de akker was het niet mogelijk om een veldkartering uit te voeren.
Reliëf	Er was ter plaatse van de mastvoetlocatie geen uitgesproken reliëf zichtbaar.
Toetsing aan het verwachtingsmodel	Het niveau van het Laagpakket van Walcheren en het Hollandveen Laagpakket zijn ter plaatse van deze mastvoetlocatie grotendeels verstoord. Daarom kan de middelhoge verwachtingswaarde op archeologische vindplaatsen voor deze niveaus bijgesteld te worden naar laag.

Advies	Op basis van de resultaten van het veldonderzoek wordt het niet nodig geacht om ter plaatse van mastvoetlocatie 1031 verder archeologisch onderzoek te laten uitvoeren.

Afbeelding 26. Satellietfoto met hierop de ligging van de boringen ter plaatse van mastvoetlocatie 1045 aangeduid. Schaal 1: 4.000. Bron: ESRI, World Imagery 2014.

Mastvoetlocatie 1047

Masttype	Bipole-steunmast
Centrumcoördinaat	X: 54.262 / Y: 387.501
Hoogteligging	Ca. -0.57 NAP
Grondgebruik	Akker
Bodemopbouw	In twee boringen (47.B06 en 47.B07) werd een intact bodemprofiel vastgesteld. Hier werd onder een kleipakket (Laagpakket van Walcheren) het Hollandveen aangeboord. De top van het Hollandveen bevond zich tussen 1.20 meter en 1.40 meter –mv (1.75 en 1.95 meter –NAP). Tussen 2.00 en 2.30 –mv (2.65 en 2.82 meter –NAP) ging dit veen over in kleiige afzettingen van het Laagpakket van Wormer. In de overige twee boringen werden gedempte veenwinningskuilen aangeboord. Hier bleef een veenrest van circa 20 cm bewaard, met daaronder afzettingen van het Laagpakket van Wormer.
Archeologie	Er werden in de boringen geen archeologische indicatoren aangetroffen.
Veldkartering	Door de begroeiing op de akker (grasland) was er het uitvoeren van een veldkartering niet mogelijk.
Reliëf	Geen uitgesproken reliëf zichtbaar.

Toetsing aan het verwachtingsmodel	In twee boringen (47.B06 en 47.B07) is een intact bodemprofiel aangetroffen. Hier kan de middelhoge verwachtingswaarde gehandhaafd worden. In de twee overige boringen is er een verstoring van zowel het Hollandveen, als het Laagpakket van Walcheren vastgesteld. Hier kan de archeologische verwachting naar beneden toe worden bijgesteld.
Advies	Op basis van de resultaten van het veldonderzoek wordt geadviseerd om ter plaatse van de mastvoetlocatie 1047 een vervolgonderzoek in de vorm van een Archeologische Begeleiding (AB) uit te laten voeren.

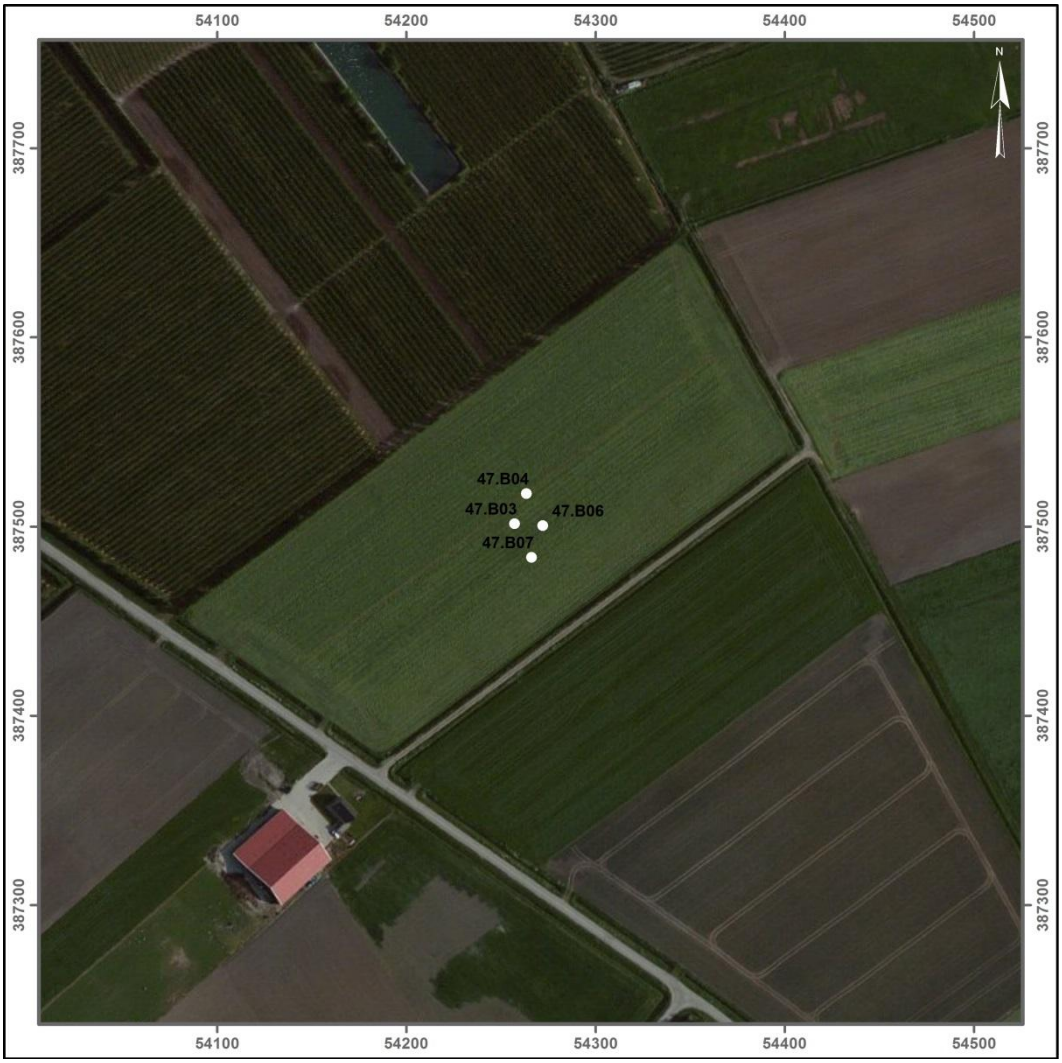

Afbeelding 27. Satellietfoto met hierop de ligging van de boringen ter plaatse van mastvoetlocatie 1047 aangeduid. Schaal 1: 4.000. Bron: ESRI, World Imagery 2014.

Mastvoetlocatie 1048

Masttype	Bipole-steunmast
Centrumcoördinaat	X: 54.558 / Y: 387.453
Hoogteligging	Ca. -0.52 NAP
Grondgebruik	Akker
Bodemopbouw	In twee boringen (48.B04 en 48.B06) werd een intact bodemprofiel vastgesteld. Hier werd onder een kleipakket (Laagpakket van Walcheren) het Hollandveen aangeboord. De top van het Hollandveen bevond zich tussen 0.90 meter en 1.50 meter –mv (1.50 en 1.83 meter –NAP). Tussen 2.00 en 2.65 –mv (2.65 en 2.98 meter –NAP) ging dit veen over in kleiige afzettingen van het Laagpakket van Wormer. In de overige twee boringen werden gedempte veenwinningskuilen aangeboord. Hier bleef een veenrest van maximaal 45 cm bewaard, met daaronder afzettingen van het Laagpakket van Wormer.
Archeologie	Er werden in de boringen geen archeologische indicatoren aangetroffen.
Veldkartering	Tijdens de veldkartering werden binnen de mastvoetlocatie enkele fragmenten bouwpuin en enkele fragmenten aardewerk vastgesteld aan het maaiveld. Het puin en het aardewerk zijn te dateren tussen de 16de en de 19de eeuw.
Reliëf	Circa 100 meter ten noorden van deze mastvoetlocatie loopt een iets hoger gelegen rug.
Toetsing aan het verwachtingsmodel	In twee boringen (48.B04 en 48.B06) is een intact bodemprofiel aangetroffen. Hier kan de middelhoge verwachtingswaarde gehandhaafd worden. In de twee overige boringen is er een verstoring van zowel het Hollandveen, als het Laagpakket van Walcheren vastgesteld. Hier kan de archeologische verwachting naar beneden toe worden bijgesteld.
Advies	Op basis van de resultaten van het veldonderzoek wordt geadviseerd om ter plaatse van de mastvoetlocatie 1048 een vervolgonderzoek in de vorm van een Archeologische Begeleiding (AB) uit te laten voeren.

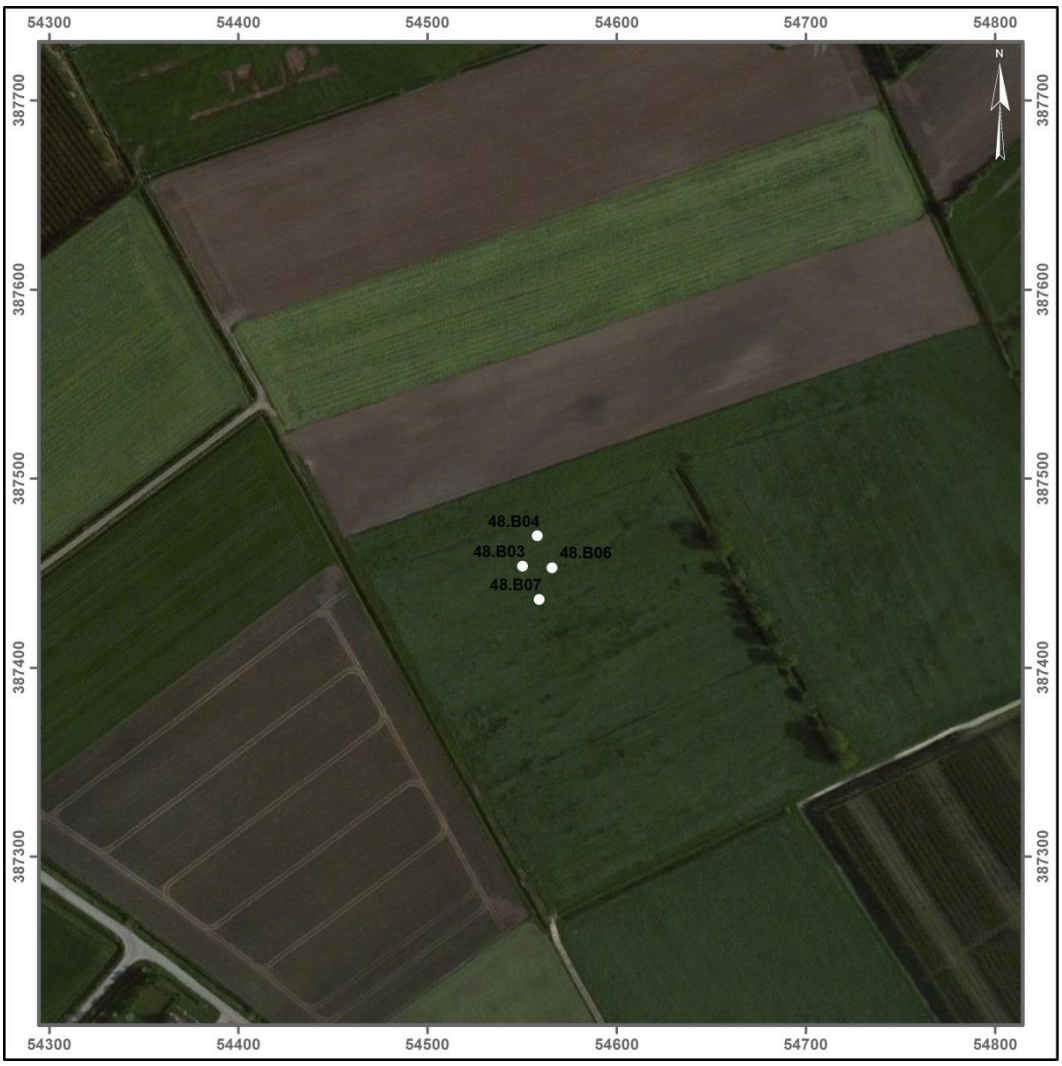

Afbeelding 28. Satellietfoto met hierop de ligging van de boringen ter plaatse van mastvoetlocatie 1048 aangeduid. Schaal 1: 4.000. Bron: ESRI, World Imagery 2014.

Mastvoetlocatie 1055

Masttype	Bipole-eindmast
Centrumcoördinaat	X: 56.859 / Y: 387.120
Hoogteligging	Ca. -0.73 NAP
Grondgebruik	Akker
Bodemopbouw	In alle boringen op deze mastvoetlocatie werd verstoring van het bodemprofiel vastgesteld. Onder de toplaag werd in alle boringen restanten van moernering vastgesteld. Van het Hollandveen bleef slechts een restant van circa 10 cm over. De top van de afzettingen van het Laagpakket van Wormer werden aangetroffen op een diepte tussen 1.75 en 2.30 meter –mv (2.46 en 3.04 meter –NAP).
Archeologie	Er werden in de boringen geen archeologische indicatoren aangetroffen.
Veldkartering	Door de begroeiing op de akker (grasland) was het uitvoeren van een veldkartering niet mogelijk.
Reliëf	Er was ter plaatse van de mastvoetlocatie geen uitgesproken reliëf zichtbaar.
Toetsing aan het verwachtingsmodel	Het niveau van het Laagpakket van Walcheren en het Hollandveen Laagpakket zijn ter plaatse van deze mastvoetlocatie grotendeels verstoord. Daarom kan de middelhoge verwachtingswaarde op archeologische vindplaatsen voor deze niveaus bijgesteld te worden naar laag.
Advies	Op basis van de resultaten van het veldonderzoek wordt het niet nodig geacht om ter plaatse van mastvoetlocatie 1055 verder archeologisch onderzoek te laten uitvoeren.

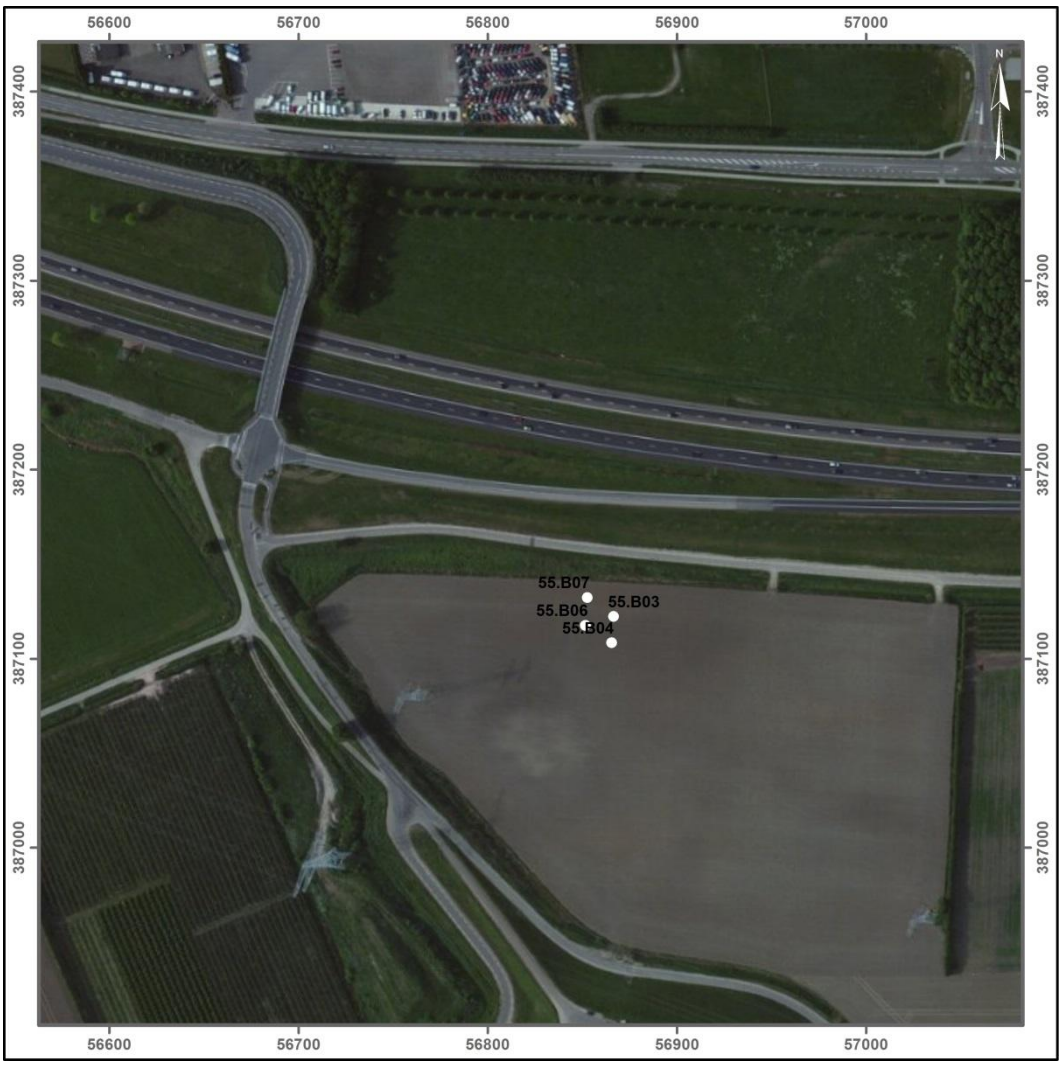

Afbeelding 29. Satellietfoto met hierop de ligging van de boringen ter plaatse van mastvoetlocatie 1055 aangeduid. Schaal 1: 4.000. Bron: ESRI, World Imagery 2014.

Mastvoetlocatie 1056

Masttype	Bipole-steunmast
Centrumcoördinaat	X: 57.111 / Y: 387.318
Hoogteligging	Ca. 0.72 NAP
Grondgebruik	Berm
Bodemopbouw	In alle boringen op deze mastvoetlocatie werd verstoring van het bodemprofiel vastgesteld. De toplaag was tot minimaal 0.6 meter –mv vergraven. Deze verstoring is te relateren aan de ligging van deze mastvoetlocatie bij de afrit van de A58 autoweg. In boringen 56.S03 en 55.S04 werd op circa 0.08 meter +NAP de top van een oude bouwvoor vastgesteld. Hieronder bevonden zich geulafzettingen van het Laagpakket van Walcheren.
Archeologie	Er werden in de boringen geen archeologische indicatoren aangetroffen.
Veldkartering	Door de begroeiing in de berm was het uitvoeren van een veldkartering niet mogelijk.
Reliëf	Het maaiveld liep op in de richting van de autoweg.
Toetsing aan het verwachtingsmodel	Doordat deze mastvoetlocatie gelegen is bij de A58 autoweg is het bodemprofiel hier wellicht op verschillende plaatsen opgehoogd en deels vergraven. Daardoor is de bodemopbouw niet meer als intact te beschouwen. Daarom kan de middelhoge archeologische verwachting naar beneden toe worden bijgesteld.
Advies	Op basis van de resultaten van het veldonderzoek wordt het niet nodig geacht om ter plaatse van mastvoetlocatie 1056 verder archeologisch onderzoek te laten uitvoeren.

Afbeelding 30. Satellietfoto met hierop de ligging van de boringen ter plaatse van mastvoetlocatie 1056 aangeduid. Schaal 1: 4.000. Bron: ESRI, World Imagery 2014.

Mastvoetlocatie 1057

Masttype	Bipole-steunmast
Centrumcoördinaat	X: 57.350 / Y: 387.506
Hoogteligging	Ca. -0.63 NAP
Grondgebruik	Braakliggend, deels onder water
Bodemopbouw	In drie boringen (boringen 57.B03, 57.B04 en 57.B06) werd een intact bodemprofiel vastgesteld. Hier werd onder een kleipakket (Laagpakket van Walcheren) het Hollandveen aangeboord. De top van het veen bevond zich tussen 1.05 en 1.35 meter –mv (1.67 en 1.98 meter –NAP). Tussen 2.55 en 2.80 –mv (3.17 en 3.46 meter –NAP) ging dit veen over in kleiige afzettingen van het Laagpakket van Wormer. Boring 57.B07 werd ter plaatse van een moerneringskuil gezet. Hier bleef een veenlaagje van 10 cm over.
Archeologie	Er werden in de boringen geen archeologische indicatoren aangetroffen.
Veldkartering	Tijdens de veldkartering werden aan het oppervlak geen indicatoren vastgesteld die zouden kunnen wijzen op de aanwezigheid van een archeologische vindplaats.
Reliëf	Er kon geen duidelijk reliëf worden ondescheiden.
Toetsing aan het verwachtingsmodel	In drie boringen (57.B03, 57.B04 en 57.B06) is een intact bodemprofiel aangetroffen. Hier kan de middelhoge verwachtingswaarde gehandhaafd worden. Deze verwachtingswaarde wordt nog benadrukt door de vele archeologische waarnemingen in de omgeving van deze mastvoetlocatie. Bij eerder onderzoek werden reeds sporen uit de Romeinse Tijd vastgesteld op het niveau van het Hollandveen, alsook veel secundair opspitmateriaal aan het maaiveld. In de overige boring is er een verstoring van de oudere lagen vastgesteld. Hier kan de archeologische verwachting naar beneden toe worden bijgesteld.

Advies	Op basis van de resultaten van het veldonderzoek wordt geadviseerd om ter plaatse van de mastvoetlocatie 1057 een vervolgonderzoek in de vorm van een Archeologische Begeleiding (AB) uit te laten voeren.

Afbeelding 31. Satellietfoto met hierop de ligging van de boringen ter plaatse van mastvoetlocatie 1057 aangeduid. Schaal 1: 4.000. Bron: ESRI, World Imagery 2014.

Mastvoetlocatie 1058

Masttype	Bipole-steunmast
Centrumcoördinaat	X: 57.551 / Y: 387.664
Hoogteligging	Ca. -1.13NAP
Grondgebruik	Braakliggend
Bodemopbouw	In drie boringen (boringen 58.B04, 58.B06 en 58.B07) werd een intact bodemprofiel vastgesteld. Onder de toplaag bevonden zich kleiafzettingen van het Laagpakket van Walcheren. Hieronder werd het Hollandveen aangeboord. De top van het veen bevond zich tussen 0.75 en 1.00 meter –mv (1.89 en 2.16 meter –NAP). Tussen 1.75 en 2.45 –mv (2.89 en 3.61 meter –NAP) ging dit veen over in kleiige afzettingen van het Laag-pakket van Wormer. In boring 58.B03 werd een smalle kreekbedding aangeboord. De top van het veen was geërodeerd tot 1.65 meter –mv (2.79 meter –NAP). Er bleef nog 40 cm veen over.
Archeologie	Er werden in de boringen geen archeologische indicatoren aangetroffen.

Veldkartering	Tijdens de veldkartering werden aan het oppervlak geen indicatoren vastgesteld die zouden kunnen wijzen op de aanwezigheid van een archeologische vindplaats. In de nabije omgeving werden bij eerder archeologisch onderzoek anders wel verschillende oppervlaktevondsten waargenomen. Tijdens profsleuvenonderzoek ten noordwesten van de mastvoetlocatie werden bovendien ook resten van bewoning aangetroffen op het niveau van het Hollandveen.
Reliëf	Ter plaatse van de mastvoetlocatie was het maaiveld wellicht genivelleerd. Er kon geen reliëf worden waargenomen.
Toetsing aan het verwachtingsmodel	In drie boringen (58.B04, 58.B06 en 58.B07) is een intact bodemprofiel aangetroffen. Hier kan de middelhoge verwachtingswaarde gehandhaafd worden. Deze verwachtingswaarde wordt nog benadrukt door de vele archeologische waarnemingen in de omgeving van deze mastvoetlocatie. Bij eerder onderzoek werden reeds sporen uit de Romeinse Tijd vastgesteld op het niveau van het Hollandveen, alsook veel secundair opspitmateriaal aan het maaiveld. Bij recent onderzoek ter plaatsen van deze mastvoetlocatie werden echter enkel moerneringssporen opgetekend (Bouma 2013). In de overige boring is het veen geërodeerd ten gevolge van een smalle inbraakgeul. Hier kan de archeologische verwachting naar beneden toe worden bijgesteld.
Advies	Ter plaatse van de mastvoetlocatie werd recent reeds een proefsleuvenonderzoek uitgevoerd. Op basis van de resultaten van dit onderzoek kan geconcludeerd worden dat het veen hier wellicht grotendeels is weggraven tijdens de Middeleeuwen. Daarom wordt het niet noodzakelijk geacht om ter plaatse van mastvoetlocatie 1058 nog verder archeologisch onderzoek te laten uitvoeren.

Afbeelding 32. Satellietfoto met hierop de ligging van de boringen ter plaatse van mastvoetlocatie 1058 aangeduid. Schaal 1: 4.000. Bron: ESRI, World Imagery 2014.

Mastvoetlocatie 1060

Masttype	Bipole-steunmast
Centrumcoördinaat	X: 58.450 / Y: 387.791
Hoogteligging	Ca. -1.30 NAP
Grondgebruik	Akker
Bodemopbouw	In alle boringen werd een intact bodemprofiel vastgesteld. Onder een kleipakket (Laagpakket van Walcheren) werd op een diepte tussen 0.55 en 0.75 meter –mv (1.81 en 2.02 meter –NAP) het Hollandveen aangeboord. Tussen 1.55 en 2.05 –mv (2.87 en 3.32 meter –NAP) ging dit veen over in kleiige afzettingen van het Laagpakket van Wormer.
Archeologie	In geen van de boringen werden archeologische indicatoren aangetroffen.
Veldkartering	Tijdens de veldkartering werd 1 fragment van een steengoed kan uit Frechen (D) gevonden (17de eeuw). Verder werden tijdens de veldkartering geen archeologische indicatoren op het maaiveld gevonden.
Reliëf	Er was ter plaatse van de mastvoetlocatie geen uitgesproken reliëf zichtbaar. De akker was duidelijk genivelleerd.
Toetsing aan het verwachtingsmodel	In alle boringen is een intact bodemprofiel aangetroffen. De middelhoge archeologische verwachting op het aantreffen van archeologische vindplaatsen kan voor deze mastvoetlocatie behouden blijven.
Advies	Op basis van de resultaten van het veldonderzoek wordt geadviseerd om ter plaatse van de mastvoetlocatie 1060 een vervolgonderzoek in de vorm van een Archeologische Begeleiding (AB) uit te laten voeren.

Afbeelding 33. Satellietfoto met hierop de ligging van de boringen ter plaatse van mastvoetlocatie 1060 aangeduid. Schaal 1: 4.000. Bron: ESRI, World Imagery 2014.

Mastvoetlocatie 1061

Masttype	Bipole-steunmast
Centrumcoördinaat	X: 58.850 / Y: 387.792
Hoogteligging	Ca. 1.50 NAP
Grondgebruik	Weiland
Bodemopbouw	Ter plaatse van deze mastvoetlocatie werden vier boringen gezet ter plaatse van de geplande mastvoet. Hier was het maaiveld met circa 3 meter opgehoogd. Deze boringen konden niet dieper dan 3 meter –mv doorgezet worden. Telkens werd hier een heterogeen pakket van klei en zand gemengd met veen en puin aangeboord. Boring 61.B09 werd op het lager deel gezet, bij de toegangsweg naar de weide. In deze boring werd een drieledig profiel vastgesteld, met een kleidek (Laagpakket van Walcheren) dat op 1.55 meter –mv (2.19 meter –NAP) overgaat in Hollandveen. Onder het veen bevindt zich, op 2.45 meter –mv (3.64 meter –NAP) de mariene afzettingen van het Laagpakket van Wormer.
Archeologie	Er werden in de boringen, behoudens recent puin en beton in de ophooglaag, geen archeologische indicatoren aangetroffen.
Veldkartering	Door de begroeiing op het weiland was het uitvoeren van een veldkartering niet mogelijk.
Reliëf	Het weiland waarop deze mastvoet is gepland wordt gekenmerkt door de hoge berg grond die hier is opgeworpen. Het weiland is hier systematisch bijna 3 meter opgehoogd. Bovenaan deze berg grond ligt een plateau. De grond is wellicht afkomstig van tijdens de verbredingwerken aan het kanaal in de jaren ’70 van de vorige eeuw.
Toetsing aan het verwachtingsmodel	Ter plaatse van de opgebrachte grond kon de archeologische toets niet worden uitgevoerd. De middelhoge verwachting onder dit gronddepot kan dus worden gehandhaafd. De extra boring, gezet op het lagere deel ten westen van dit depot, bevestigt de verwachting.
Advies	In dien er bij het plaatsen van deze mastvoet niet dieper wordt gegraven dan 1.5 meter beneden het oorspronkelijke maaiveld, dan wordt geen verder onderzoek noodzakelijk geacht. Indien de fundering voor deze mastvoet toch beneden dit niveau dient te worden aangelegd, dan wordt geadviseerd om conform de AMZ-cyclus een archeologisch vervolgonderzoek te laten uitvoeren.

Afbeelding 34. Satellietfoto met hierop de ligging van de boringen ter plaatse van mastvoetlocatie 1061 aangeduid. Schaal 1: 4.000. Bron: ESRI, World Imagery 2014.

Mastvoetlocatie 1062

Masttype	Bipole-steunmast
Centrumcoördinaat	X: 59.238 / Y: 387.793
Hoogteligging	Ca. -0.84 NAP
Grondgebruik	Weiland
Bodemopbouw	In twee boringen (62.B03 en 62.B07) werden direct onder de bouwvoor een heterogeen kleipakket gevonden met daarin brokken en spikkels middeleeuws bouwpuin. De aard van deze resten is onbekend. Onder dit kleipakket werd in de overige boringen de intacte top van het Hollandveen aangeboord. Deze top bevindt zich tussen 0.80 en 1.25 meter –mv (1.76 en 2.02 meter –NAP). Onder het veenniveau werd, op een diepte tussen 1.75 en 1.90 meter –mv (2.71 en 2.73 meter –NAP) afzettingen behorende tot het laagpakket van Wormer aangeboord.
Archeologie	In twee boringen (62.B03 en 62.B07) werden, direct onder de bouwvoor, in een heterogeen kleipakket puinbrokken en –spikkels, veenbrokken en fosfaatvlekken vastgesteld. Dit kleipakket bevond zich tussen 0.3 en 1.25 meter –mv (1.07 en 2.02 meter –NAP).
Veldkartering	Door de aanwezige begroeiing ter plaatse van de geplande mastvoet kon er geen veldkartering worden uitgevoerd.
Reliëf	Licht golvend reliëf. Mogelijk recent van oorsprong (verbreding kanaal).

Toetsing aan het verwachtingsmodel	In twee boringen (62.B03 en 62.B07) werden direct onder de bouwvoor archeologische indicatoren aangeboord, die wijzen op mogelijke middeleeuwse bewoning/activiteit. Bovendien werden in alle boringen is een intacte veentop aangetroffen. Er kan dus worden gesteld dat de middelhoge verwachtingswaarde op het aantreffen van archeologische resten ter plaatse van de geplande matlocatie kan worden gehandhaafd.
Advies	Op basis van de resultaten van het veldonderzoek wordt geadviseerd om ter plaatse van de mastvoetlocatie 1062 een vervolgonderzoek in de vorm van een Archeologische Begeleiding (AB) uit te laten voeren.

Afbeelding 35. Satellietfoto met hierop de ligging van de boringen ter plaatse van mastvoetlocatie 1062 aangeduid. Schaal 1: 4.000. Bron: ESRI, World Imagery 2014.

Mastvoetlocatie 1063

Masttype	Bipole-steunmast
Centrumcoördinaat	X: 59.637 / Y: 387.811
Hoogteligging	Ca. -1.39 NAP
Grondgebruik	Weiland
Bodemopbouw	Deze mastvoetlocatie is gelegen in natuurontwikkelingsgebied. De bouwvoor werd hier recent afgegraven ter verarming van de grond. Het maaiveld bevindt zich hier dus rechtstreeks op de natuurlijke klei (Laagpakket van Walcheren). Onder deze klei werden in alle boringen werd een intact veenprofiel vastgesteld. Dit niveau werd hier aangetroffen tussen 0.35 en 0.50 meter –mv (1.74 en 1.92 meter –NAP). Tussen 1.25 en 1.85 –mv (2.64 en 3.14 meter –NAP) ging dit veen over in klei behorende tot het Laagpakket van Wormer.
Archeologie	In de boringen werden geen archeologische indicatoren aangetroffen.

Veldkartering	Het weiland was begroeid met gras. Het gras was evenwel nog niet dik begroeid. De veldkartering ter plaatse van de mastvoetlocatie leverde geen indicatie voor archeologische vindplaatsen op het Laagpakket van Walcheren.
Reliëf	Er was ter plaatse van de mastvoetlocatie geen uitgesproken reliëf zichtbaar.
Toetsing aan het verwachtingsmodel	De middelhoge verwachting op het niveau van het Laagpakket van Walcheren kan, door het ontbreken van archeologische indicatoren op het maaiveld, naar laag worden bijgesteld. De verwachting op het veenniveau kan wel gehandhaafd worden. In alle boringen is een intact veenprofiel aangetroffen.
Advies	Op basis van de resultaten van het veldonderzoek wordt geadviseerd om ter plaatse van de mastvoetlocatie 1063 een vervolgonderzoek in de vorm van een Archeologische Begeleiding (AB) uit te laten voeren.

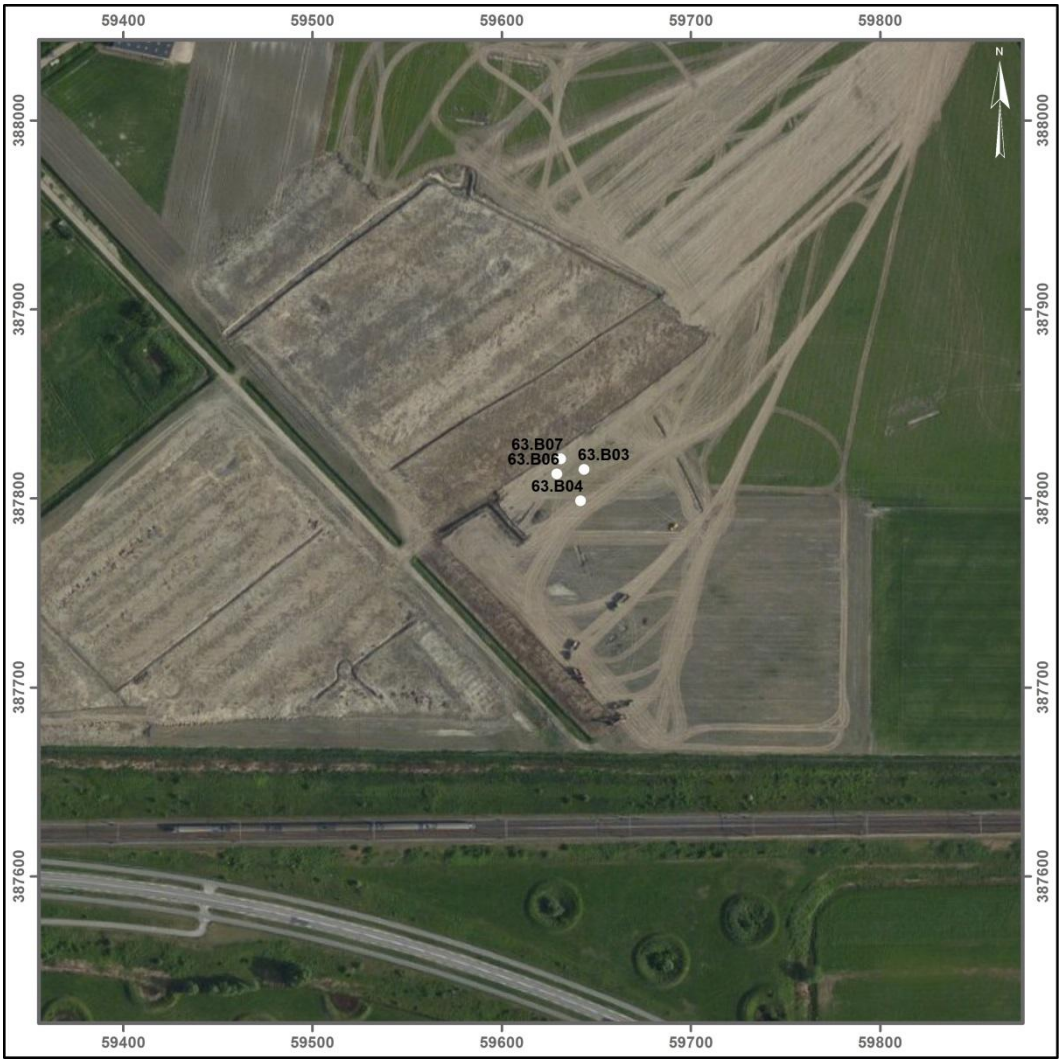

Afbeelding 36. Satellietfoto met hierop de ligging van de boringen ter plaatse van mastvoetlocatie 1063 aangeduid. De natuurinrichtingswerkzaamheden zijn op dit beeld volop aan de gang. Schaal 1: 4.000. Bron: ESRI, World Imagery 2014.

Mastvoetlocatie 1064

Masttype	Bipole-steunmast
Centrumcoördinaat	X: 59.637 / Y: 387.811
Hoogteligging	Ca. -1.10 NAP
Grondgebruik	Akker/berm

Bodemopbouw	In drie boringen (64.B04, 64.B06 en 64.B07) werd een intact bodemprofiel vastgesteld. Onder kleiafzettingen van het Laagpakket van Walcheren werden, op een diepte tussen 0.50 en 1.00 meter –mv (1.84 en 1.93 meter –NAP) werd het intacte Hollandveen aangeboord. Tussen 1.60 en 2.15 meter –mv (2.94 en 3.04 meter –NAP) gaat dit veen over in kleiafzettingen behorende tot het Laagpakket van Wormer. In boring 64.B03 is tot 1.30 meter –mv (2.53 meter –NAP) een vergraven pakket waargenomen, met daaronder Hollandveen. De veentop was hier vergraven. Deze boring lag in de berm van de weg. De verstoring kan dus gerelateerde worden aan de aanwezigheid van deze weg.
Archeologie	In de boringen werden geen archeologische indicatoren aangetroffen.
Veldkartering	De akker was begroeid met gewas. Er kon hier geen veldkartering worden uitgevoerd.
Reliëf	Er was ter plaatse van de mastvoetlocatie geen uitgesproken reliëf zichtbaar.
Toetsing aan het verwachtingsmodel	In drie boringen is een intact bodemprofiel aangetroffen. De middelhoge archeologische verwachting op het aantreffen van archeologische vindplaatsen kan voor deze mastvoetlocatie behouden blijven. In één boring 64.B03 werd een vergraven bodemprofiel vastgesteld. Hier kan de middelhoge archeologische verwachting worden bijgesteld naar laag.
Advies	Op basis van de resultaten van het veldonderzoek wordt geadviseerd om ter plaatse van de mastvoetlocatie 1064 een vervolgonderzoek in de vorm van een Archeologische Begeleiding (AB) uit te laten voeren.

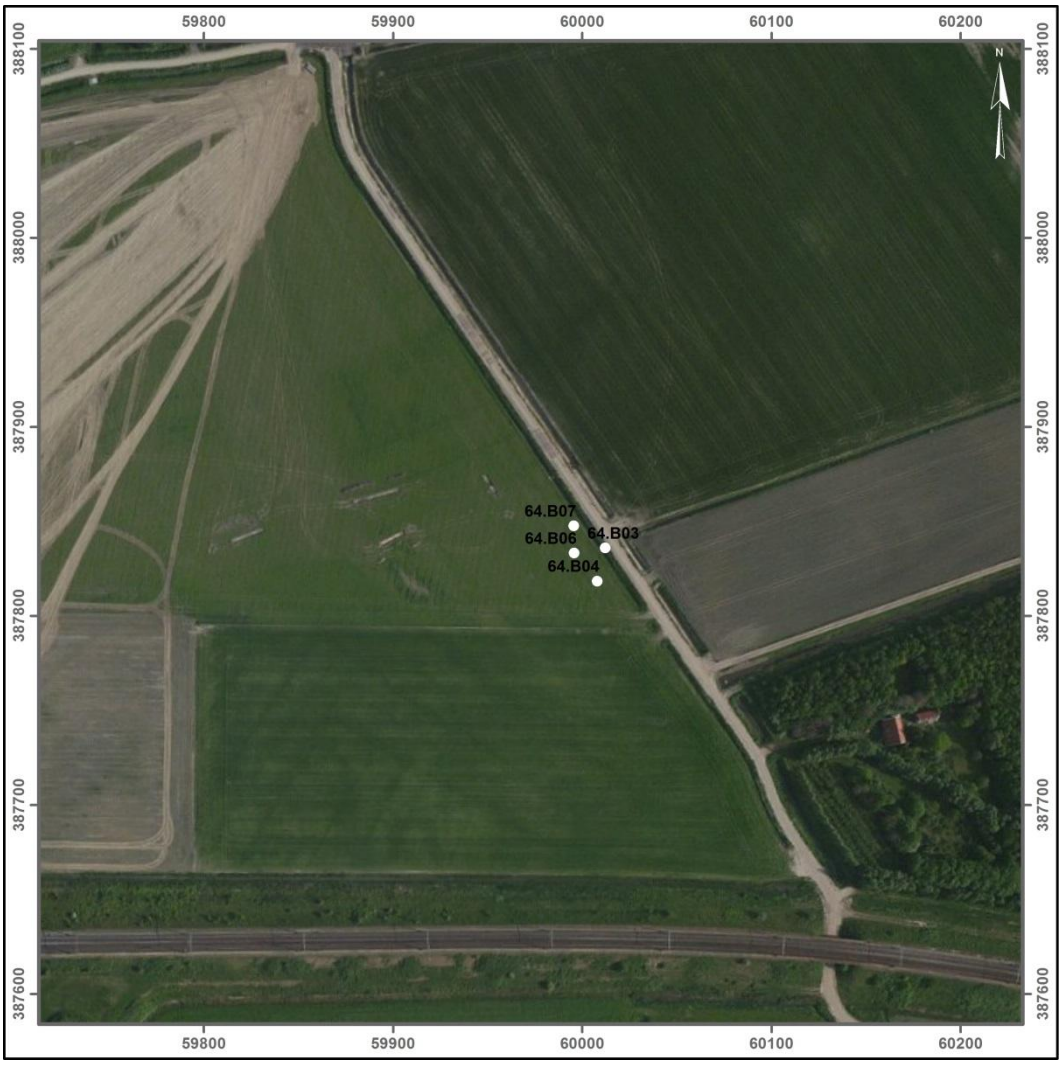

Afbeelding 37. Satellietfoto met hierop de ligging van de boringen ter plaatse van mastvoetlocatie 1064 aangeduid. Schaal 1: 4.000. Bron: ESRI, World Imagery 2014.

Mastvoetlocatie 1065

Masttype	Bipole-hoekmast
Centrumcoördinaat	X: 60.401 / Y: 387.855
Hoogteligging	Ca. -1.08 NAP
Grondgebruik	Akker
Bodemopbouw	Alle boorlocaties werden op voorhand tot een diepte van circa 1 meter –mv met een graafmachine uitgegraven. In drie boringen (65.S01, 65.S02 en 65.S03) werden sporen van veenwinningsputten aangeboord. Hier was het bodemprofiel verstoord tot in diep in het veen. Er bleef hier slechts een veenrest over van circa 10 cm. In boring 65.B04 werd intact veen vastgesteld. De klei erboven bleek echter wel vergraven. De intacte veentop werd aangeboord op 0.75 meter –mv (1.80 meter –NAP). Tussen 1.40 en 1.70 meter –mv (2.56 en 2.73 meter –NAP) gaat het veen over in afzettingen van het Laagpakket van Wormer. Opvallend is dat de afzettingen van dit laagpakket overwegend zandig van aard zijn.
Archeologie	Er werden in de boringen geen archeologische indicatoren aangetroffen.
Veldkartering	Een veldkartering ter plaatse van de mastvoetlocatie leverde geen resultaten op.
Reliëf	Er werd geen uitgesproken reliëf vastgesteld.
Toetsing aan het verwachtingsmodel	Ter plaatse van de geplande mastvoet is het bodemprofiel wellicht grotendeels verstoord. De middelhoge archeologische verwachting op het aantreffen van resten op het niveau van het Hollandveen en het Laagpakket van Walcheren kan dus bijgesteld worden naar laag.
Advies	Op basis van de resultaten van het veldonderzoek wordt het niet nodig geacht om ter plaatse van mastvoetlocatie 1065 verder archeologisch onderzoek te laten uitvoeren.

Afbeelding 38. Satellietfoto met hierop de ligging van de boringen ter plaatse van mastvoetlocatie 1065 aangeduid. Schaal 1: 4.000. Bron: ESRI, World Imagery 2014.

Mastvoetlocatie 1066

Masttype	Bipole-aftakkingsmast
Centrumcoördinaat	X: 60.693 / Y: 387.694
Hoogteligging	Ca. -0.12 NAP
Grondgebruik	Akker
Bodemopbouw	Alle boorlocaties werden op voorhand tot een diepte van circa 1 meter –mv met een graafmachine uitgegraven. Dit was de eis van de grondeigenaar. In alle boringen werden diepreikende zandige afzettingen van het Laagpakket van Walcheren aangeboord. Deze mastvoet is gepland op de rand van de iets hoger gelegen inversierug die vanaf Yerseke in de richting van Hansweert loopt. In boring 66.S02 werd nog Hollandveen vastgesteld op een diepte van 1.95 meter –mv (2.16 meter –NAP). De veentop was duidelijk geërodeerd. Afzettingen van het Laagpakket van Wormer werden in deze boring waargenomen op 3.30 meter –mv (3.51 meter –NAP).
Archeologie	Er werden in de boringen geen archeologische indicatoren aangetroffen.
Veldkartering	Een veldkartering ter plaatse van de mastvoetlocatie leverde geen resultaten op.
Reliëf	Er werd geen uitgesproken reliëf vastgesteld.
Toetsing aan het verwachtingsmodel	Binnen de planlocatie werden geulafzettingen van het Laagpakket van Walcheren vastgesteld. Door de aanwezigheid van deze geul zijn de oudere geologische niveaus geërodeerd. Hierdoor kan de archeologische verwachting voor deze niveaus naar beneden toe worden bijgesteld. Aan het oppervlak werden tijdens de veldkartering geen archeologische indicatoren aangetroffen. Bovendien zijn in de ruime omgeving van deze geplande mastvoet nog geen archeologische waarnemingen gedaan op het niveau van het Laagpakket van Walcheren. Daarom kan ook de hoge archeologische verwachting op dit niveau verlaagd worden.
Advies	Op basis van de resultaten van het veldonderzoek wordt het niet nodig geacht om ter plaatse van mastvoetlocatie 1066 verder archeologisch onderzoek te laten uitvoeren.

Afbeelding 39. Satellietfoto met hierop de ligging van de boringen ter plaatse van mastvoetlocatie 1066 aangeduid. Schaal 1: 4.000. Bron: ESRI, World Imagery 2014.

Mastvoetlocatie 1067

Masttype	Bipole-steunmast
Centrumcoördinaat	X: 60.978 / Y: 387.520
Hoogteligging	Ca. 0.15 NAP
Grondgebruik	Akker
Bodemopbouw	Alle boorlocaties werden op voorhand tot een diepte van circa 1 meter –mv met een graafmachine uitgegraven. Dit was de eis van de grondeigenaar. In alle boringen werden diepreikende zandige geulafzettingen van het Laagpakket van Walcheren aangeboord. Deze geul heeft de oudere geologische niveaus deels of volledig geërodeerd. De geplande mastvoetlocatie is centraal gelegen in de oude geulbedding.
Archeologie	Er werden in de boringen geen archeologische indicatoren aangetroffen.
Veldkartering	Aan het oppervlak werden een tweetal fragmenten aardewerk aangetroffen die te dateren zijn in de 17de – 18de eeuw. Ze kunnen geïnterpreteerd worden als bemestingsmateriaal.
Reliëf	Er werd geen uitgesproken reliëf vastgesteld.

Toetsing aan het verwachtingsmodel	Binnen de planlocatie werden geulafzettingen van het Laagpakket van Walcheren vastgesteld. Door de aanwezigheid van deze geul zijn de oudere geologische niveaus volledig of deels weggeslagen. Hierdoor kan de archeologische verwachting voor deze niveaus naar beneden toe worden bijgesteld. Aan het oppervlak werden tijdens de veldkartering geen duidelijke archeologische indicatoren aangetroffen die wijzen op bewoningssporen uit de Late Middeleeuwen of de Nieuwe Tijd. Bovendien zijn in de ruime omgeving van deze geplande mastvoet nog geen archeologische waarnemingen gedaan op het niveau van het Laagpakket van Walcheren. Daarom kan ook de hoge archeologische verwachting op dit niveau verlaagd worden.
Advies	Op basis van de resultaten van het veldonderzoek wordt het niet nodig geacht om ter plaatse van mastvoetlocatie 1067 verder archeologisch onderzoek te laten uitvoeren.

Afbeelding 40. Satellietfoto met hierop de ligging van de boringen ter plaatse van mastvoetlocatie 1067 aangeduid. Schaal 1: 4.000. Bron: ESRI, World Imagery 2014.

Mastvoetlocatie 1068

Masttype	Bipole-steunmast
Centrumcoördinaat	X: 61.253 / Y: 387.340
Hoogteligging	Ca. 0.55 NAP
Grondgebruik	Akker
Bodemopbouw	Bovenin het bodemprofiel werden in drie boringen (68.S02, 68.S03 en 68.S04) verstoring vastgesteld. De aard van de verstoring is onbekend. In boring 68.S03 is dit waarschijnlijk in verband te brengen met een gedempte perceelssloot. Onder de antropogene bodemlagen werden in alle boringen diepreikende zandige geulafzettingen van het Laagpakket van Walcheren aangeboord.
Archeologie	Er werden in drie boringen archeologische indicatoren aangetroffen in antropogeen verstoorde bodemlagen. In boring 68.S02 werden tussen 0.45 en 0.55 meter –mv enkele spikkels baksteen vastgesteld. In boring 68.S03 werden in het dempingsmateriaal van een perceelssloot eveneens enkele puinspikkels gevonden. Tot slot werden in boring 68.S04 tussen 0.35 en 0.65 meter –mv fragmenten van aardewerk en spikkels baksteenpuin aangetroffen. Het aardewerk is te dateren in de 18de tot de 20ste eeuw.
Veldkartering	Door de begroeiing ter plaatse van de planlocatie (groenbemesting) kon er geen veldkartering worden uitgevoerd.
Reliëf	Er werd geen uitgesproken reliëf vastgesteld.
Toetsing aan het verwachtingsmodel	Binnen de planlocatie werden geulafzettingen van het Laagpakket van Walcheren vastgesteld. Door de aanwezigheid van deze geul zijn de oudere geologische niveaus volledig of deels weggeslagen. Hierdoor kan de archeologische verwachting voor deze niveaus naar beneden toe worden bijgesteld. In drie boringen werd ook een verstoring van de bovenste deel van het bodemprofiel vastgesteld. Hierdoor kan geconcludeerd worden dat binnen de geplande mastvoet het archeologisch bodemarchief wellicht grotendeels vernietigd is. Daarom kan de hoge verwachting op het aantreffen van archeologische resten naar beneden toe worden bijgesteld.
Advies	Op basis van de resultaten van het veldonderzoek wordt het niet nodig geacht om ter plaatse van mastvoetlocatie 1068 verder archeologisch onderzoek te laten uitvoeren.

Afbeelding 41. Satellietfoto met hierop de ligging van de boringen ter plaatse van mastvoetlocatie 1068 aangeduid. Schaal 1: 4.000. Bron: ESRI, World Imagery 2014.

Mastvoetlocatie 1069

Masttype	Bipole-steunmast
Centrumcoördinaat	X: 61.606 / Y: 387.108
Hoogteligging	Ca. 0.61 NAP
Grondgebruik	Akker
Bodemopbouw	In alle boringen werden onder de bouwvoor geulafzettingen van het Laagpakket van Walcheren aangetroffen. Er konden geen oudere archeologische niveaus worden vastgesteld. Deze oudere niveaus, met name het Hollandveen en de afzettingen van het Laagpakket van Wormer, zijn geërodeerd door de jongere inbraakgeul.
Archeologie	In de boringen zijn geen archeologische indicatoren aangetroffen
Veldkartering	Aan het oppervlak werden tijdens de veldkartering verspreid enkele kleine fragmenten baksteenpuin en aardewerk uit de Nieuwe Tijd aangetroffen. Dit materiaal is door bemesting op het veld terecht gekomen.
Reliëf	Er werd geen uitgesproken reliëf vastgesteld.
Toetsing aan het verwachtingsmodel	Binnen de planlocatie werden geulafzettingen van het Laagpakket van Walcheren vastgesteld. Door de aanwezigheid van deze geul zijn de oudere geologische niveaus volledig of deels weggeslagen. Hierdoor kan de archeologische verwachting voor deze niveaus naar beneden toe worden bijgesteld. Aan het oppervlak zijn geen aanwijzingen aangetroffen die wijzen op bewoning binnen de geplande mastvoet. Daarom kan de middelhoge archeologische verwachting worden bijgesteld naar laag.
Advies	Op basis van de resultaten van het veldonderzoek wordt het niet nodig geacht om ter plaatse van mastvoetlocatie 1069 verder archeologisch onderzoek te laten uitvoeren.

Afbeelding 42. Satellietfoto met hierop de ligging van de boringen ter plaatse van mastvoetlocatie 1069 aangeduid. Schaal 1: 4.000. Bron: ESRI, World Imagery 2014.

Mastvoetlocatie 1070

Masttype	Bipole-steunmast
Centrumcoördinaat	X: 61.957 / Y: 386.878
Hoogteligging	Ca -0.02 NAP
Grondgebruik	Akker
Bodemopbouw	In alle boringen werden onder de bouwvoor geulafzettingen van het Laagpakket van Walcheren aangetroffen. Er konden geen oudere archeologische niveaus worden vastgesteld. Deze oudere niveaus, met name het Hollandveen en de afzettingen van het Laagpakket van Wormer, zijn geërodeerd door de jongere inbraakgeul.
Archeologie	In de boringen zijn geen archeologische indicatoren aangetroffen
Veldkartering	Tijdens de veldkartering werden aan het oppervlak geen archeologische indicatoren aangetroffen.
Reliëf	In de omgeving van de mastvoetlocatie is geen reliëf te onderscheiden.
Toetsing aan het verwachtingsmodel	Binnen de planlocatie werden geulafzettingen van het Laagpakket van Walcheren vastgesteld. Door de aanwezigheid van deze geul zijn de oudere geologische niveaus volledig of deels weggeslagen. Hierdoor kan de archeologische verwachting voor deze niveaus naar beneden toe worden bijgesteld. Aan het oppervlak zijn geen aanwijzingen aangetroffen die wijzen op bewoning binnen de geplande mastvoet. Daarom kan de middelhoge archeologische verwachting worden bijgesteld naar laag.
Advies	Op basis van de resultaten van het veldonderzoek wordt het niet nodig geacht om ter plaatse van mastvoetlocatie 1070 verder archeologisch onderzoek te laten uitvoeren.

Afbeelding 43. Satellietfoto met hierop de ligging van de boringen ter plaatse van mastvoetlocatie 1070 aangeduid. Schaal 1: 4.000. Bron: ESRI, World Imagery 2014.

Mastvoetlocatie 1071

Masttype	Bipole-steunmast
Centrumcoördinaat	X: 62.310 / Y: 386.647
Hoogteligging	Ca -0.60 NAP
Grondgebruik	Boomgaard
Bodemopbouw	In alle boringen is een heterogene bouwvoor vastgesteld tot 0.5 meter –mv. In drie boringen werden onder de bouwvoor geulafzettingen van het Laagpakket van Walcheren aangetroffen. In boring 71.B03 werd op een diepte van 2.10 meter –mv (2.57 meter –NAP) de geërodeerde top van het Hollandveen aangeboord. In deze boring werd op 3.00 meter –mv de afzettingen van het Laagpakket van Wormer aangeboord (3.47 meter –NAP). In Boring 71.B07 werd wel een intacte veentop vastgesteld. De top bevindt zich hier op 0.90 meter –mv (1.82 meter –NAP). Het Lp. van Wormer is in deze boring aangetroffen op 2.20 meter –mv (3.12 meter –NAP). Het hoogteverschil tussen deze niveaus bij boring 71.B03 en 71.B07 kan verklaard worden doordat het landschap ongelijk verzakt is bij de landschapsinversie. Boring 71.B03 bevindt zich op de rand van de geul en dieper verzakt door het dikkere zandpakket dat hier op de oever is afgezet. Boring 71.B07 ligt in het komgebied en hier is de inklinking minder, doordat er minder bovenliggend sediment is afgezet.
Archeologie	In de boringen zijn geen archeologische indicatoren aangetroffen
Veldkartering	Doordat het terrein begroeid was met bomen en gras kon er geen veldkartering worden uitgevoerd.
Reliëf	Er kon geen duidelijk reliëf worden onderscheiden.

Toetsing aan het verwachtingsmodel	Het Laagpakket van Walcheren lijkt ter plaatse van de geplande mastvoet vrij intact bewaard te zijn. Er kon geen veldkartering worden uitgevoerd. Daarom moet de middelhoge verwachting gehandhaafd blijven. Op het niveau van het Hollandveen is er in drie boringen erosie van de top vastgesteld. Om deze redenen kan hier de middelhoge verwachting op de aanwezigheid van vindplaatsen naar beneden bijgesteld worden.
Advies	Op basis van de resultaten van het veldonderzoek wordt geadviseerd om ter plaatse van de mastvoetlocatie 1071 een vervolgonderzoek in de vorm van een Archeologische Begeleiding (AB) uit te laten voeren. Dit onderzoek is gericht op het opsporen van eventuele vindplaatsen op het niveau van het Laagpakket van Walcheren.

Afbeelding 44. Satellietfoto met hierop de ligging van de boringen ter plaatse van mastvoetlocatie 1071 aangeduid. Schaal 1: 4.000. Bron: ESRI, World Imagery 2014.

Mastvoetlocatie 1072

Masttype	Bipole-steunmast
Centrumcoördinaat	X: 62.662 / Y: 386.417
Hoogteligging	Ca. 0.04 NAP
Grondgebruik	Boomgaard
Bodemopbouw	In alle boringen werden onder de bouwvoor geulafzettingen behorende tot het Laagpakket van Walcheren aangetroffen. Er konden geen oudere archeologische niveaus worden vastgesteld. Deze oudere niveaus, met name het Hollandveen en de afzettingen van het Laagpakket van Wormer, zijn geërodeerd door de jongere inbraakgeul.
Archeologie	In de boringen werden geen archeologische indicatoren aangetroffen
Veldkartering	Door de begroeiing ter plaatse van de geplande mastvoet kon er geen veldkartering worden uitgevoerd.
Reliëf	Er is geen uitgesproken reliëf vastgesteld.
Toetsing aan het verwachtingsmodel	Het Laagpakket van Walcheren lijkt ter plaatse van de geplande mastvoet vrij intact bewaard te zijn. Er kon geen veldkartering worden uitgevoerd. Daarom moet de middelhoge verwachting gehandhaafd blijven. Het Hollandveen en Het Laagpakket van Wormer werden in de boringen niet aangetroffen. Wellicht zijn deze geologische niveaus geërodeerd. Daarom kan de middelhoge verwachting op deze niveaus worden bijgesteld naar laag.
Advies	Op basis van de resultaten van het veldonderzoek wordt geadviseerd om ter plaatse van de mastvoetlocatie 1072 een vervolgonderzoek in de vorm van een Archeologische Begeleiding (AB) uit te laten voeren. Dit onderzoek is gericht op het opsporen van eventuele vindplaatsen op het niveau van het Laagpakket van Walcheren.

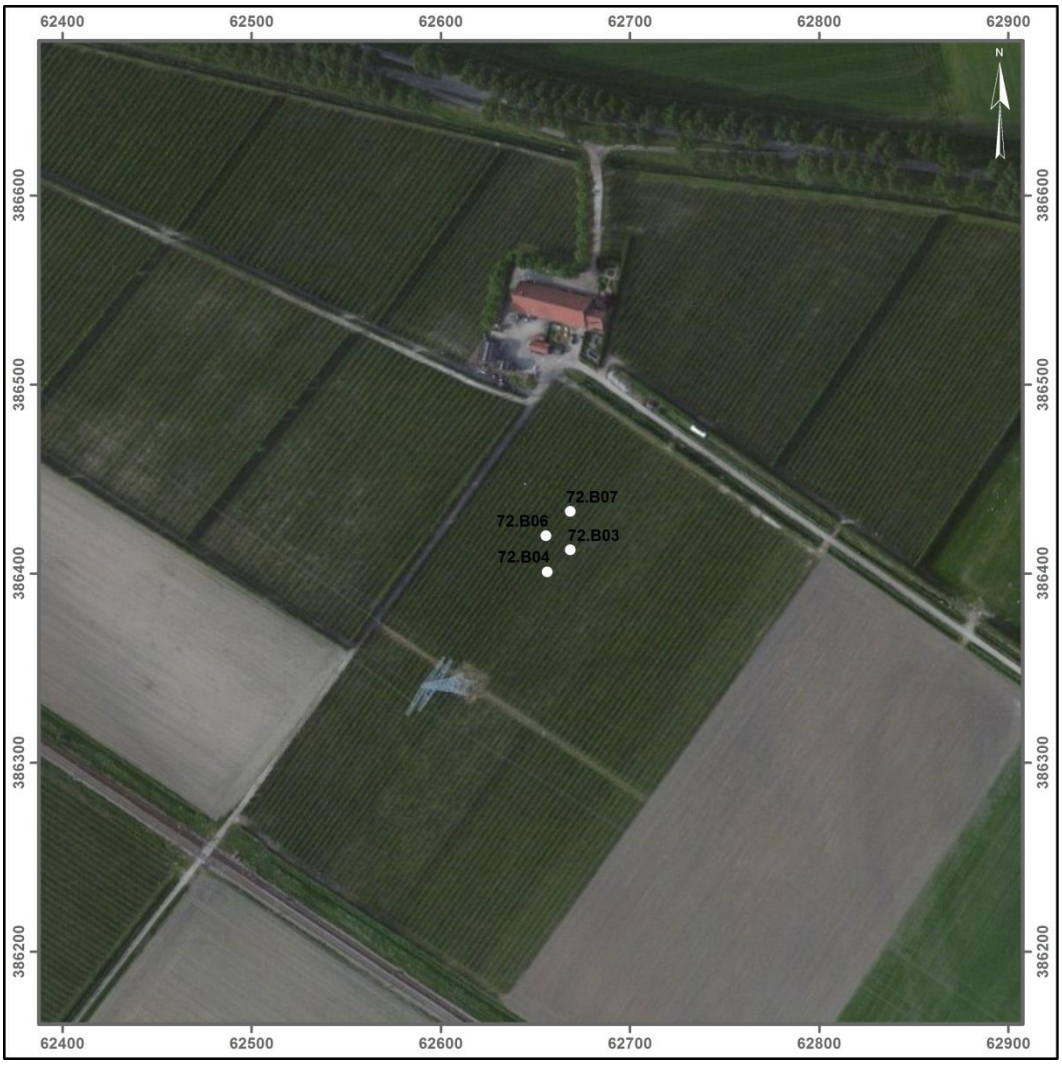

Afbeelding 45. Satellietfoto met hierop de ligging van de boringen ter plaatse van mastvoetlocatie 1072 aangeduid. Schaal 1: 4.000. Bron: ESRI, World Imagery 2014.

Mastvoetlocatie 1073

Masttype	Bipole-hoekmast
Centrumcoördinaat	X: 63.016 / Y: 386.185
Hoogteligging	Ca. -0.40 NAP
Grondgebruik	Akker
Bodemopbouw	In boring 73.B01 werd onder de kleiafzettingen van het Laagpakket van Walcheren de intacte Hollandveentop aangeboord. De top van het veen bevindt zich hier op een diepte van 1.30 meter –mv (1.78 meter –NAP). In boring 73.B03 en 73.B06 werd een moerneringsput aangetroffen. Het veen was hier grotendeels weggegraven. Onder het veen werd op een diepte tussen 2.10 en 2.80 meter –mv (2.40 en 3.28 meter –NAP) afzettingen van het Laagpakket Wormer aangetroffen. Ter plaatse van boring 73.B04 bevindt zich een kleine restgeul. Het bodemprofiel is verzakt ten opzichte van de andere boringen. Het veen is hier geërodeerd tot op een diepte van 2.25 meter –mv (2.55 meter –NAP). De afzettingen van het Lp. van Wormer werden hier vastgesteld op een diepte van 3.60 meter –mv (3.90 meter –NAP).
Archeologie	In de boringen werden geen archeologische indicatoren aangetroffen
Veldkartering	Tijdens de veldkartering werden enkel enkele fragmenten recent baksteenpuin en fragmenten van drainagebuis gevonden.
Reliëf	Er is geen uitgesproken reliëf vastgesteld.
Toetsing aan het verwachtingsmodel	Ter plaatse van boring 73.B01 is het bodemprofiel intact bewaard. Hier kan de middelhoge archeologische verwachting behouden blijven. In het overige deel van de planlocatie is er verstoring van de archeologische niveaus vastgesteld waardoor hier de archeologische verwachting naar beneden toe moet worden bijgesteld.
Advies	Op basis van de resultaten van het veldonderzoek kan geconcludeerd worden dat de bodemgesteldheid binnen de geplande mastvoet grotendeels verstoord is. Daarom wordt ter plaatse van mastvoetlocatie 1073 geen verder archeologisch onderzoek noodzakelijk geacht.

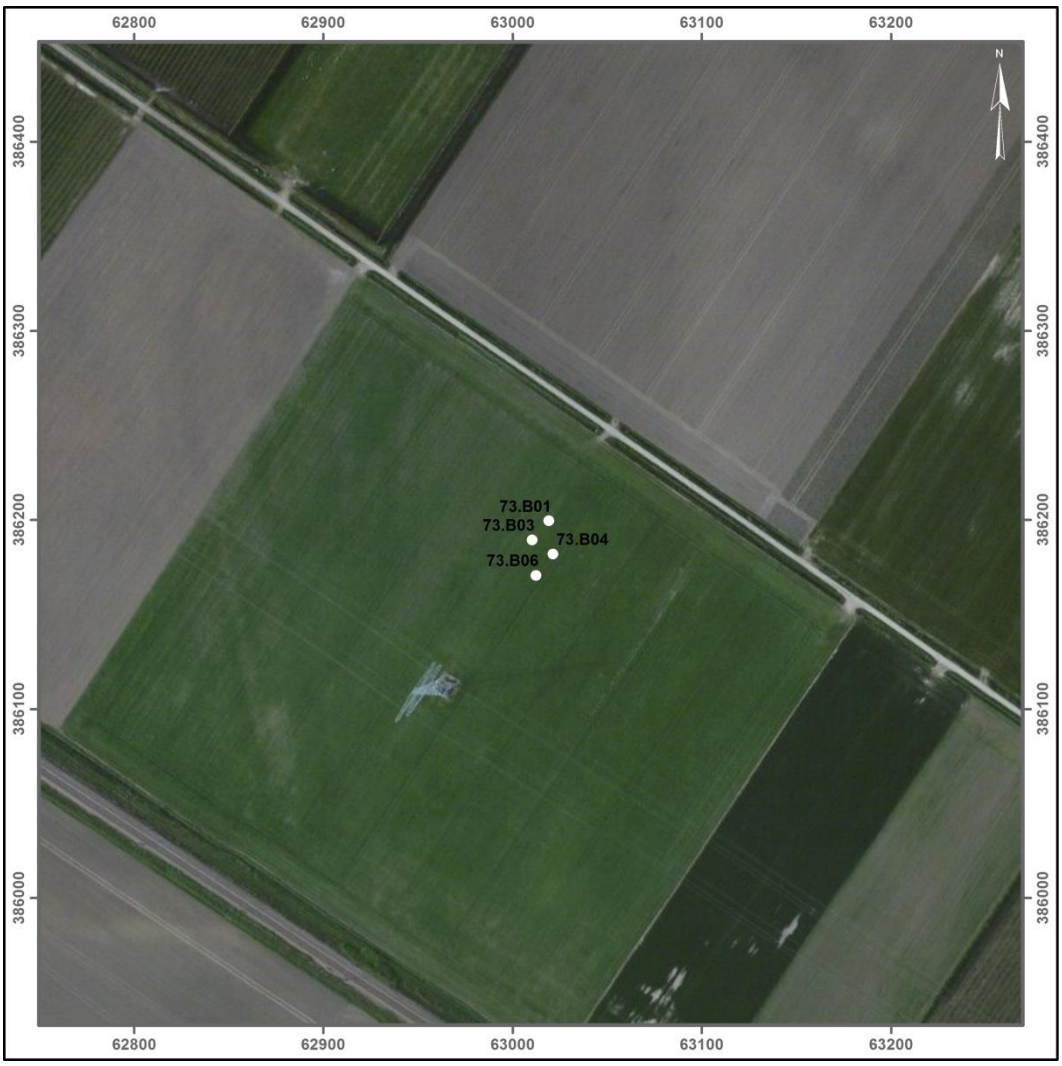

Afbeelding 46. Satellietfoto met hierop de ligging van de boringen ter plaatse van mastvoetlocatie 1073 aangeduid. Schaal 1: 4.000. Bron: ESRI, World Imagery 2014.

Mastvoetlocatie 1074

Masttype	Bipole-steunmast
Centrumcoördinaat	X: 63.340 / Y: 385.968
Hoogteligging	Ca. -1.21 NAP
Grondgebruik	Akker
Bodemopbouw	In alle boringen zijn onder de bouwvoor intacte kleiafzettingen van het Laagpakket van Walcheren aangetroffen. Deze afzettingen gaan langzaam over in zandige facies. Op een diepte tussen 0.95 en 1.40 meter –mv (2.17 en 2.68 meter –NAP) werd het Hollandveen aangetroffen. De top van dit veen was zwak tot matig geërodeerd. Onder het veen bevindt zich het Laagpakket van Wormer. De top varieert tussen 1.85 en 2.00 meter –mv (3.02 en 3.28 meter –NAP).
Archeologie	In de boringen werden geen archeologische indicatoren aangetroffen
Veldkartering	Tijdens het veldonderzoek was het terrein begroeid met aardappelen. Hierdoor kon geen veldkartering worden uitgevoerd.
Reliëf	Er is geen uitgesproken reliëf vastgesteld.
Toetsing aan het verwachtingsmodel	Deze planlocatie bevindt zich in het komgebied. Bewoning op het niveau van het Laagpakket van Walcheren wordt hier dus niet verwacht. Er is eveneens erosie op het Hollandveenniveau vastgesteld. De middelhoge archeologische verwachting voor dit niveau kan dus ook worden bijgesteld naar beneden toe.
Advies	Op basis van het veldonderzoek is de archeologische verwachting ter plaatse van mastvoet 1074 dus eerder laag. Daarom wordt hier geen verder archeologisch onderzoek geadviseerd.

Afbeelding 47. Satellietfoto met hierop de ligging van de boringen ter plaatse van mastvoetlocatie 1074 aangeduid. Schaal 1: 4.000. Bron: ESRI, World Imagery 2014.

Mastvoetlocatie 1075

Masttype	Bipole-steunmast
Centrumcoördinaat	X: 63.653 / Y: 385.759
Hoogteligging	Ca. -0.85 NAP
Grondgebruik	Akker
Bodemopbouw	Boring 75.B04 is gezet ter plaatse van een gedempte sloot. Hier is het bodemprofiel geroerd tot 2.15 meter –mv. In alle overige boringen zijn onder de bouwvoor afzettingen van het Laagpakket van Walcheren aangetroffen. Deze afzettingen bestonden afwisselend uit kleiige en zandige facies. Op een diepte tussen 1.65 en 1.70 meter –mv (2.50 en 2.55 meter –NAP) werd het Hollandveen aangetroffen. De top van dit veen was geërodeerd. Op een diepte tussen 2.35 en 2.50 meter –mv (3.22 en 3.32 meter -NAP) werd de top van de afzettingen van het Laagpakket van Wormer aangeboord.
Archeologie	In de boringen werden geen archeologische indicatoren aangetroffen
Veldkartering	De veldkartering in de planlocatie leverde geen resultaten op.
Reliëf	Er is geen uitgesproken reliëf vastgesteld.

Toetsing aan het verwachtingsmodel	Er zijn tijdens het veldonderzoek geen indicatoren aangetroffen die wijzen in de richting van archeologische resten op het niveau van het laagpakket van Walcheren. Daarom kan de archeologische verwachting op dit niveau worden bijgesteld naar laag. Bovendien is de ligging in het komgebied niet gebruikelijk voor bewoningsporen uit de Middeleeuwen. Het Hollandveen is in alle boringen geërodeerd vastgesteld. Hierdoor zijn mogelijk aanwezige archeologische resten wellicht vernietigd. Daarom kan ook de middelhoge archeologische verwachting op dir niveau naar beneden toe worden bijgesteld.
Advies	Op basis van het veldonderzoek is de archeologische verwachting ter plaatse van de geplande mastvoet 1075 dus als eerder laag te beschouwen. Daarom wordt hier geen verder archeologisch onderzoek geadviseerd.

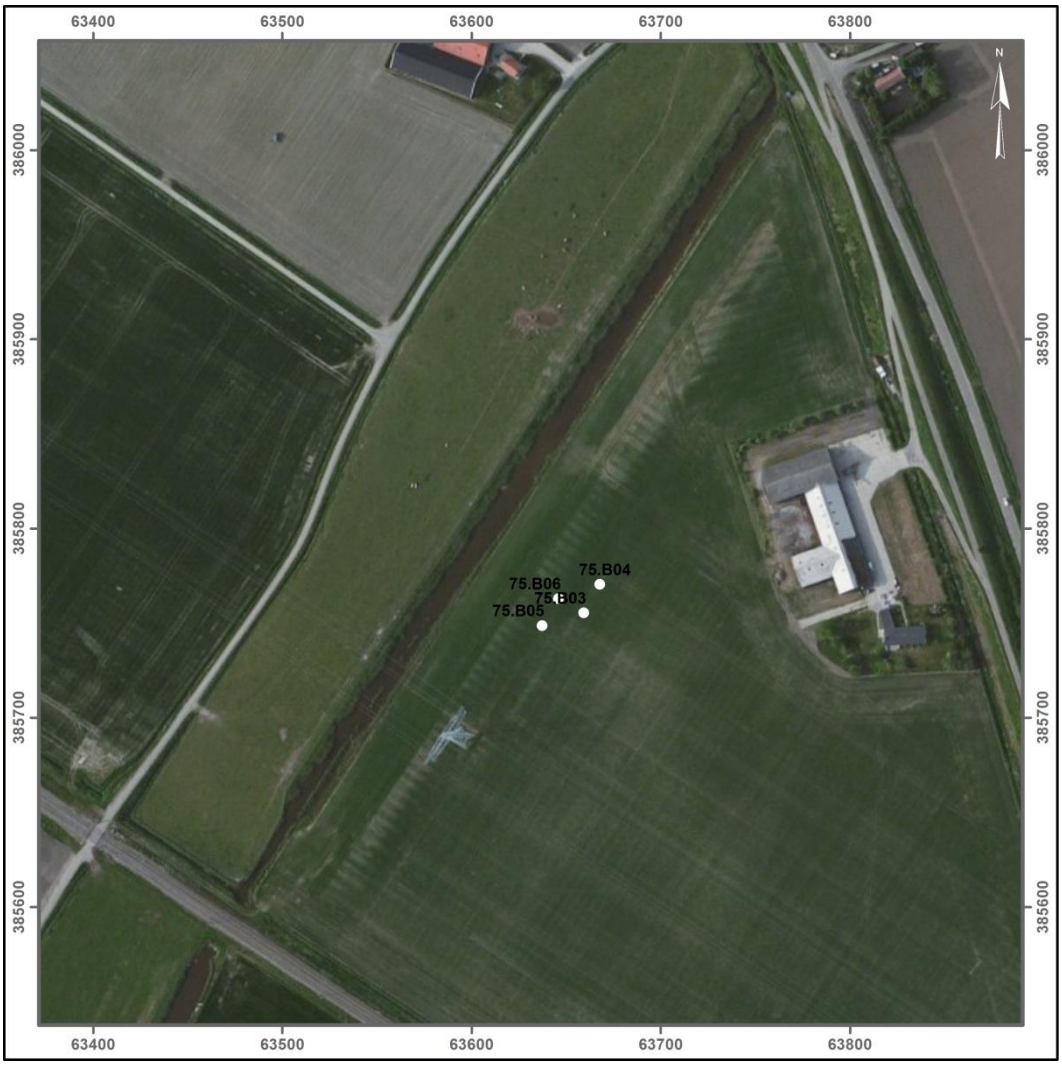

Afbeelding 48. Satellietfoto met hierop de ligging van de boringen ter plaatse van mastvoetlocatie 1075 aangeduid. Schaal 1: 4.000. Bron: ESRI, World Imagery 2014.

4 Conclusie en advies

4.1 Conclusie

In het kader van een de nieuwe hoogspanningsverbinding Zuid-West 380 kV tussen het hoogspanningsstation Borssele en het landelijke hoogspanningsnet bij Tilburg werd, ter plaatse van 42 mastvoetlocaties is in het deelgebied Zeeland, een Inventariserend Veldonderzoek door middel van verkennende boringen en een oppervlaktekartering uitgevoerd. Met het veldonderzoek zijn in totaal 169 boringen gezet en is waar mogelijk is een veldkartering uitgevoerd. Doel van dit onderzoek was het toetsen en indien nodig, aanpassen van het Archeologische Verwachtingsmodel zoals opgesteld in het Archeologisch Bureauonderzoek.

Op basis van het archeologisch verwachtingsmodel kon worden gesteld dat er voor dit deelgebied, met name het Zeeuwse zeekleilandschap een relatief lage verwachting gold voor archeologische resten uit de volgende periodes:[33]

- Paleolithicum tot en met het Midden Neolithicum
- Bronstijd tot en met de vroege ijzertijd
- Vroeg Romeinse tijd tot en met de vroege middeleeuwen

Alleen op plaatsen waar de Pleistocene ondergrond intact is en relatief ondiep onder het oppervlak ligt, kunnen Paleolithische en Mesolithische vindplaatsen aanwezig zijn. Op basis van de Pleistocene morfologie is dit met name het geval in het zuidelijke deel van de Zak van Zuid-Beveland, het smalle deel in het oosten van Zuid-Beveland, alsmede het centrale, zuidelijke deel van Tholen (daar waar de Rillandrug loopt). De archeologische verwachting op sporen daterend uit de overige genoemde periodes in het Zeeuwse deel van het studiegebied is laag, omdat het gebied toen geheel of gedeeltelijk onder water stond. Het Zeeuwse zeekleilandschap binnen het studiegebied kent een middelhoge tot hoge verwachting voor de volgende periodes:

- Laat-Neolithicum
- Midden en Late IJzertijd
- Midden en Laat-Romeinse Tijd
- Late Middeleeuwen tot en met de Nieuwe Tijd

Vanaf het Laat-Neolithicum is er een hoge verwachting omdat men vanaf die periode de lagergelegen delen ging bewonen. De hoge verwachting op sporen daterend voor de Late Middeleeuwen is vooral gerelateerd aan het Oudland: het centrale deel van Zuid-Beveland (rond Goes) en het zuidelijke deel van Tholen.

Het archeologisch verwachtingsmodel zoals opgesteld in het Bureauonderzoek kon naar aanleiding van de resultaten van het veldonderzoek getoetst en verder verfijnd worden. In onderstaande toetsingstabel worden de archeologische verwachting en bijgestelde archeologische verwachting gegeven.

[33] Uit de Jong en Evelein 2014

Tabel 3. Verwachtingstabel mastvoetlocaties

Mastvoetlocatie	Archeologische verwachting (conform IKAW)	Toetsing archeologische verwachting na veldonderzoek	Archeologische verwachting na veldtoets
1027	Middelhoog	Doordat het Laagpakket van Walcheren en het Hollandveen Laagpakket hier wellicht grotendeels verstoord is door veenontginning in de Late Middeleeuwen dient de middelhoge verwachtingswaarde op archeologische vindplaatsen voor deze niveaus bijgesteld te worden naar laag.	Laag
1028	Middelhoog	Doordat het Laagpakket van Walcheren en het Hollandveen Laagpakket verstoord zijn door veenontginning in de Late Middeleeuwen dient de middelhoge verwachtingswaarde op archeologische vindplaatsen voor deze niveaus bijgesteld te worden naar laag.	Laag
1029	Middelhoog	In twee boringen (29.B04 en 29.B06) is een intact bodemprofiel aangetroffen. Hier kan de middelhoge verwachtingswaarde gehandhaafd worden. In de twee overige boringen is er een verstoring van de oudere lagen vastgesteld. Bovendien wijst de veldkartering niet in de richting van bewoning uit de Late Middeleeuwen. Hier kan de archeologische verwachting naar beneden toe worden bijgesteld.	Laag
1030	Middelhoog	Het niveau van het Laagpakket van Walcheren en het Hollandveen Laagpakket zijn ter plaatse van deze mastvoetlocatie wellicht grotendeels verstoord. Daarom kan de middelhoge verwachtingswaarde op archeologische vindplaatsen voor deze niveaus bijgesteld te worden naar laag.	Laag
1031	Middelhoog	Het niveau van het Laagpakket van Walcheren en het Hollandveen Laagpakket zijn ter plaatse van deze mastvoetlocatie wellicht grotendeels verstoord. Daarom kan de middelhoge verwachtingswaarde op archeologische vindplaatsen voor deze niveaus bijgesteld te worden naar laag.	Laag
1032	Middelhoog	Het niveau van het Laagpakket van Walcheren en het Hollandveen Laagpakket zijn ter plaatse van deze mastvoetlocatie wellicht grotendeels verstoord. Daarom kan de middelhoge verwachtingswaarde op archeologische vindplaatsen voor deze niveaus bijgesteld te worden naar laag.	Laag
1033	Middelhoog	In drie boringen (33B03, 33.B06 en 33.B07) is een intact bodemprofiel aangetroffen. Hier kan de middelhoge verwachtingswaarde gehandhaafd worden. In één boring werd op het niveau van het Hollandveen bovendien indicatoren aangetroffen die wijzen in de richting van bewonings- of ontginningssporen. Dit benadrukt en verhoogt zelfs de archeologische verwachtingswaarde ter plaatse van deze mastvoetlocatie. In de overige boring is er een verstoring van de oudere lagen vastgesteld ten gevolge van veenwinning. Hier kan de archeologische verwachting worden bijgesteld naar beneden toe.	Deels Middelhoog/ Deels Laag
1034	Middelhoog	In alle boringen is een intact bodemprofiel aangetroffen. De middelhoge verwachtingswaarde kan hier dus gehandhaafd worden. De aanwezigheid van archeologische vindplaatsen op het veen in de omgeving van deze mastvoetlocatie benadrukken deze verwachting.	Middelhoog
1035	Middelhoog	In twee boringen (35.B02 en 35.B07) is een intact bodemprofiel aangetroffen. Hier kan de middelhoge verwachtingswaarde gehandhaafd worden. In de twee overige boringen is er een verstoring van de oudere niveaus vastgesteld. Hier kan de archeologische verwachting naar beneden toe worden bijgesteld.	Deels Middelhoog/ Deels Laag

Mastvoetlocatie	Archeologische verwachting (conform IKAW)	Toetsing archeologische verwachting na veldonderzoek	Archeologische verwachting na veldtoets
1036	Middelhoog	In alle boringen werd een intact Hollandveenniveau aangetroffen. De middelhoge verwachtingswaarde voor dit niveau kan dus gehandhaafd worden. De afzettingen van het Laagpakket van Walcheren waren duidelijk verstoord. Op dit niveau vervalt de archeologische verwachting.	Middelhoog
1037	Middelhoog	Het niveau van het Laagpakket van Walcheren en het Hollandveen Laagpakket zijn ter plaatse van deze mastvoetlocatie wellicht grotendeels verstoord. Daarom kan de middelhoge verwachtingswaarde op archeologische vindplaatsen voor deze niveaus bijgesteld te worden naar laag.	Laag
1038	Middelhoog	In twee boringen (38.B06 en 38.B07) is een intact bodemprofiel aangetroffen. Hier kan de middelhoge verwachtingswaarde gehandhaafd worden. In de twee overige boringen werden sporen van veenontginning waargenomen. Hier zijn zowel het Hollandveen als het Laagpakket van Walcheren verstoord en kan de archeologische verwachting naar beneden worden bijgesteld.	Deels Middelhoog/ Deels Laag
1039	Middelhoog	In twee boringen (39.B04 en 39.B06) is een intact bodemprofiel aangetroffen. Hier kan de middelhoge verwachtingswaarde gehandhaafd worden. In de twee overige boringen werd een verstoring van de oudere niveaus vastgesteld, waardoor de archeologische verwachting hier naar benden kan worden bijgesteld.	Deels Middelhoog/ Deels Laag
1039A	Middelhoog	Het Laagpakket van Walcheren lijkt vrij intact bewaard te zijn. Er zijn echter tijdens de veldkartering en het booronderzoek geen duidelijke indicatoren voor bewoning uit de Middeleeuwen of de Nieuwe Tijd gevonden. Op het niveau van het Hollandveen is er in alle boringen erosie van de top vastgesteld. Om deze redenen kan de middelhoge verwachting op de aanwezigheid van vindplaatsen naar beneden bijgesteld worden.	Laag
1040	Middelhoog	Doordat er verstoring is vastgesteld van de top van het Laagpakket van Walcheren tot minimaal 0.75 meter –mv, kan de middelhoge archeologische verwachting op dit niveau worden bijgesteld naar laag. Door het ontbreken van oudere niveaus in het boorprofiel kan verondersteld worden dat deze tot minimaal 4 meter –mv geërodeerd zijn. Hierdoor vervalt de archeologische verwachting op de overige archeologische niveaus.	Laag
1041	Middelhoog	Het Laagpakket van Walcheren is intact. Echter, noch in de boringen, noch aan het maaiveld werden duidelijke indicatoren voor bewoning uit de Middeleeuwen of de Nieuwe Tijd gevonden. Op het niveau van het Hollandveen is er in alle boringen erosie van de top vastgesteld. Om deze redenen kan de middelhoge verwachting op de aanwezigheid van archeologische vindplaatsen naar beneden bijgesteld worden.	Laag
1042	Middelhoog	Het Laagpakket van Walcheren lijkt vrij intact bewaard te zijn. Er kon geen veldkartering worden uitgevoerd. Daarom moet de middelhoge verwachting gehandhaafd blijven. Op het niveau van het Hollandveen is er in drie boringen erosie van de top vastgesteld. Om deze redenen kan hier de middelhoge verwachting op de aanwezigheid van vindplaatsen naar beneden bijgesteld worden. In boring 42.B07 werd een intact veenprofiel vastgesteld. Hier blijft ook de middel-	Middelhoog

Mastvoetlocatie	Archeologische verwachting (conform IKAW)	Toetsing archeologische verwachting na veldonderzoek	Archeologische verwachting na veldtoets
		hoge verwachting op dit niveau aanwezig.	
1043	Middelhoog	Het Laagpakket van Walcheren lijkt vrij intact bewaard te zijn. Er kon geen veldkartering worden uitgevoerd. Daarom moet de middelhoge verwachting gehandhaafd blijven. Op het niveau van het Hollandveen is er in alle boringen erosie van de top vastgesteld. Om deze redenen kan hier de middelhoge verwachting op de aanwezigheid van vindplaatsen naar beneden bijgesteld worden.	Middelhoog
1044	Middelhoog	In drie boringen (44.B03, 44.B04 en 44.B07) is een intact bodemprofiel aangetroffen. Hier kan de middelhoge verwachtingswaarde gehandhaafd worden. In de overige boring is er een verstoring van de oudere lagen vastgesteld. Bovendien wijst de veldkartering niet in de richting van bewoning uit de Late Middeleeuwen. Hier kan de archeologische verwachting naar beneden toe worden bijgesteld.	Deels Middelhoog/ Deels Laag
1045	Middelhoog	Het niveau van het Laagpakket van Walcheren en het Hollandveen Laagpakket zijn ter plaatse van deze mastvoetlocatie grotendeels verstoord. Daarom kan de middelhoge verwachtingswaarde op archeologische vindplaatsen voor deze niveaus bijgesteld te worden naar laag.	Laag
1047	Middelhoog	In twee boringen (47.B06 en 47.B07) is een intact bodemprofiel aangetroffen. Hier kan de middelhoge verwachtingswaarde gehandhaafd worden. In de twee overige boringen is er een verstoring van zowel het Hollandveen, als het Laagpakket van Walcheren vastgesteld. Hier kan de archeologische verwachting naar beneden toe worden bijgesteld.	Deels Middelhoog/ Deels Laag
1048	Middelhoog	In twee boringen (48.B04 en 48.B06) is een intact bodemprofiel aangetroffen. Hier kan de middelhoge verwachtingswaarde gehandhaafd worden. In de twee overige boringen is er een verstoring van zowel het Hollandveen, als het Laagpakket van Walcheren vastgesteld. Hier kan de archeologische verwachting naar beneden toe worden bijgesteld.	Deels Middelhoog/ Deels Laag
1055	Middelhoog	Het niveau van het Laagpakket van Walcheren en het Hollandveen Laagpakket zijn ter plaatse van deze mastvoetlocatie grotendeels verstoord. Daarom kan de middelhoge verwachtingswaarde op archeologische vindplaatsen voor deze niveaus bijgesteld te worden naar laag.	Laag
1056	Middelhoog	Doordat deze mastvoetlocatie gelegen is bij de A58 autoweg is het bodemprofiel hier wellicht op verschillende plaatsen opgehoogd en deels vergraven. Daardoor is de bodemopbouw niet meer als intact te beschouwen. Daarom kan de middelhoge archeologische verwachting naar beneden toe worden bijgesteld.	Laag
1057	Middelhoog	In drie boringen (57.B03, 57.B04 en 57.B06) is een intact bodemprofiel aangetroffen. Hier kan de middelhoge verwachtingswaarde gehandhaafd worden. Deze verwachtingswaarde wordt nog benadrukt door de vele archeologische waarnemingen in de omgeving van deze mastvoetlocatie. Bij eerder onderzoek werden reeds sporen uit de Romeinse Tijd vastgesteld op het niveau van het Hollandveen, alsook veel secundair opspitmateriaal aan het maaiveld. In de overige boring is er een verstoring van de oudere lagen vastgesteld. Hier kan de archeologische verwachting naar beneden toe worden bijgesteld.	Deels Middelhoog/ Deels Laag
1058	Middelhoog	In drie boringen (58.B04, 58.B06 en 58.B07) is een intact	Laag

Mastvoetlocatie	Archeologische verwachting (conform IKAW)	Toetsing archeologische verwachting na veldonderzoek	Archeologische verwachting na veldtoets
		bodemprofiel aangetroffen. Hier kan de middelhoge verwachtingswaarde gehandhaafd worden. Deze verwachtingswaarde wordt nog benadrukt door de vele archeologische waarnemingen in de omgeving van deze mastvoetlocatie. Bij eerder onderzoek werden reeds sporen uit de Romeinse Tijd vastgesteld op het niveau van het Hollandveen, alsook veel secundair opspitmateriaal aan het maaiveld. Bij recent onderzoek ter plaatsen van deze mastvoetlocatie werden echter enkel moerneringssporen opgetekend (Bouma 2013). In de overige boring is het veen geërodeerd ten gevolge van een smalle inbraakgeul. Hier kan de archeologische verwachting naar beneden toe worden bijgesteld.	
1060	Middelhoog	In alle boringen is een intact bodemprofiel aangetroffen. De middelhoge archeologische verwachting op het aantreffen van archeologische vindplaatsen kan voor deze mastvoetlocatie behouden blijven.	Middelhoog
1061	Middelhoog	Het weiland waarop deze mastvoet is gepland wordt gekenmerkt door de hoge berg grond die hier is opgeworpen. Het weiland is hier systematisch bijna 3 meter opgehoogd. Bovenaan deze berg grond ligt een plateau. De grond is wellicht afkomstig van tijdens de verbredingwerken aan het kanaal in de jaren ’70 van de vorige eeuw.	Laag behoudens er dieper dan 3 meter –mv zal worden ontgraven
1062	Middelhoog	In twee boringen (62.B03 en 62.B07) werden direct onder de bouwvoor archeologische indicatoren aangeboord, die wijzen op mogelijke middeleeuwse bewoning/activiteit. Bovendien werden in alle boringen is een intacte veentop aangetroffen. Er kan dus worden gesteld dat de middelhoge verwachtingswaarde op het aantreffen van archeologische resten ter plaatse van de geplande matlocatie kan worden gehandhaafd.	Middelhoog
1063	Middelhoog	De middelhoge verwachting op het niveau van het Laagpakket van Walcheren kan, door het ontbreken van archeologische indicatoren op het maaiveld, naar laag worden bijgesteld. De verwachting op het veenniveau kan wel gehandhaafd worden. In alle boringen is een intact veenprofiel aangetroffen.	Middelhoog
1064	Middelhoog	In drie boringen is een intact bodemprofiel aangetroffen. De middelhoge archeologische verwachting op het aantreffen van archeologische vindplaatsen kan voor deze mastvoetlocatie behouden blijven. In één boring, 64.B03, werd een vergraven bodemprofiel vastgesteld. Hier kan de middelhoge archeologische verwachting worden bijgesteld naar laag.	Deels Middelhoog/ Deels Laag
1065	Middelhoog	Ter plaatse van de geplande mastvoet is het bodemprofiel wellicht grotendeels verstoord. De middelhoge archeologische verwachting op het aantreffen van resten op het niveau van het Hollandveen en het Laagpakket van Walcheren kan dus bijgesteld worden naar laag.	Laag
1066	Hoog	Binnen de planlocatie werden geulafzettingen van het Laagpakket van Walcheren vastgesteld. Door de aanwezigheid van deze geul zijn de oudere geologische niveaus geërodeerd. Hierdoor kan de archeologische verwachting voor deze niveaus naar beneden toe worden bijgesteld. Aan het oppervlak werden tijdens de veldkartering geen archeologische indicatoren aangetroffen. Bovendien zijn in de ruime	Laag

Mastvoetlocatie	Archeologische verwachting (conform IKAW)	Toetsing archeologische verwachting na veldonderzoek	Archeologische verwachting na veldtoets
		omgeving van deze geplande mastvoet nog geen archeologische waarnemingen gedaan op het niveau van het Laagpakket van Walcheren. Daarom kan ook de hoge archeologische verwachting op dit niveau verlaagd worden.	
1067	Hoog	Binnen de planlocatie werden geulafzettingen van het Laagpakket van Walcheren vastgesteld. Door de aanwezigheid van deze geul zijn de oudere geologische niveaus volledig of deels weggeslagen. Hierdoor kan de archeologische verwachting voor deze niveaus naar beneden toe worden bijgesteld. Aan het oppervlak werden tijdens de veldkartering geen duidelijke archeologische indicatoren aangetroffen die wijzen op bewoningssporen uit de Late Middeleeuwen of de Nieuwe Tijd. Bovendien zijn in de ruime omgeving van deze geplande mastvoet nog geen archeologische waarnemingen gedaan op het niveau van het Laagpakket van Walcheren. Daarom kan ook de hoge archeologische verwachting op dit niveau verlaagd worden.	Laag
1068	Hoog	Binnen de planlocatie werden geulafzettingen van het Laagpakket van Walcheren vastgesteld. Door de aanwezigheid van deze geul zijn de oudere geologische niveaus volledig of deels weggeslagen. Hierdoor kan de archeologische verwachting voor deze niveaus naar beneden toe worden bijgesteld. In drie boringen werd ook een verstoring van de bovenste deel van het bodemprofiel vastgesteld. Hierdoor kan geconcludeerd worden dat binnen de geplande mastvoet het archeologisch bodemarchief wellicht grotendeels vernietigd is. Daarom kan de hoge verwachting op het aantreffen van archeologische resten naar beneden toe worden bijgesteld.	Laag
1069	Middelhoog	Binnen de planlocatie werden geulafzettingen van het Laagpakket van Walcheren vastgesteld. Door de aanwezigheid van deze geul zijn de oudere geologische niveaus volledig of deels weggeslagen. Hierdoor kan de archeologische verwachting voor deze niveaus naar beneden toe worden bijgesteld. Aan het oppervlak zijn geen aanwijzingen aangetroffen die wijzen op bewoning binnen de geplande mastvoet. Daarom kan de middelhoge archeologische verwachting worden bijgesteld naar laag.	Laag
1070	Middelhoog	Binnen de planlocatie werden geulafzettingen van het Laagpakket van Walcheren vastgesteld. Door de aanwezigheid van deze geul zijn de oudere geologische niveaus volledig of deels weggeslagen. Hierdoor kan de archeologische verwachting voor deze niveaus naar beneden toe worden bijgesteld. Aan het oppervlak zijn geen aanwijzingen aangetroffen die wijzen op bewoning binnen de geplande mastvoet. Daarom kan de middelhoge archeologische verwachting worden bijgesteld naar laag.	Laag
1071	Middelhoog	Het Laagpakket van Walcheren lijkt ter plaatse van de geplande mastvoet vrij intact bewaard te zijn. Er kon geen veldkartering worden uitgevoerd. Daarom moet de middelhoge verwachting gehandhaafd blijven. Op het niveau van het Hollandveen is er in drie boringen erosie van de top vastgesteld. Om deze redenen kan hier de middelhoge verwachting op de aanwezigheid van vindplaatsen naar beneden bijgesteld worden.	Middelhoog
1072	Middelhoog	Het Laagpakket van Walcheren lijkt ter plaatse van de ge-	Middelhoog

Mastvoetlocatie	Archeologische verwachting (conform IKAW)	Toetsing archeologische verwachting na veldonderzoek	Archeologische verwachting na veldtoets
		plande mastvoet vrij intact bewaard te zijn. Er kon geen veldkartering worden uitgevoerd. Daarom moet de middelhoge verwachting gehandhaafd blijven. Het Hollandveen en Het Laagpakket van Wormer werden in de boringen niet aangetroffen. Wellicht zijn deze geologische niveaus geërodeerd. Daarom kan de middelhoge verwachting op deze niveaus worden bijgesteld naar laag.	
1073	Middelhoog	Ter plaatse van boring 73.B01 is het bodemprofiel intact bewaard. Hier kan de middelhoge archeologische verwachting behouden blijven. In het overige deel van de planlocatie is er verstoring van de archeologische niveaus vastgesteld waardoor hier de archeologische verwachting naar beneden toe moet worden bijgesteld.	Laag
1074	Middelhoog	Deze planlocatie bevindt zich in het komgebied. Bewoning op het niveau van het Laagpakket van Walcheren wordt hier dus niet verwacht. Er is eveneens erosie op het Hollandveenniveau vastgesteld. De middelhoge archeologische verwachting voor dit niveau kan dus ook worden bijgesteld naar beneden toe.	Laag
1075	Middelhoog	Er zijn tijdens het veldonderzoek geen indicatoren aangetroffen die wijzen in de richting van archeologische resten op het niveau van het laagpakket van Walcheren. Daarom kan de archeologische verwachting op dit niveau worden bijgesteld naar laag. Bovendien is de ligging in het komgebied niet gebruikelijk voor bewoningsporen uit de Middeleeuwen. Het Hollandveen is in alle boringen geërodeerd vastgesteld. Hierdoor zijn mogelijk aanwezige archeologische resten wellicht vernietigd. Daarom kan ook de middelhoge archeologische verwachting op dit niveau naar beneden toe worden bijgesteld.	Laag

4.2 Advies

Op basis van de toetsing door het booronderzoek en de oppervlaktekartering werd voor elke locatie een advies geformuleerd betreffende eventueel archeologisch vervolgonderzoek. In onderstaande tabel wordt per mastvoetlocatie een advies geformuleerd op basis van het rijksbeleid. Indien er een vervolgonderzoek noodzakelijk geacht wordt, betreft het hier een onderzoek in de vorm van een Archeologische Begeleiding (AB) conform het protocol Opgraven.

De keuze voor deze onderzoekvorm is ingegeven door praktische overwegingen. Enerzijds is de verstoringsoppervlakte per mastvoetlocatie eerder beperkt (circa 680 m^2 voor een steunmast en circa 1.170 m^2 voor een hoekmast). Bovendien zijn de geplande werkzaamheden van dien aard dat het praktisch nagenoeg onmogelijk is om voorafgaand een proefsleuvenonderzoek en/of opgraving uit te voeren. Doordat bij dit project vele grondeigenaren en grondgebruikers betrokken zijn en gezien het verkrijgen van betredingstoestemming hierbij vaak zeer moeilijk verliep, lijkt het niet wenselijk om voorafgaand aan de eigenlijke graafwerkzaamheden nog een gravend archeologisch onderzoek uit te voeren. Bovendien zijn er nog fysieke belemmeringen (zoals schade aan drainage en gewassen én het plaatsen van bronbemaling) waardoor het af te raden valt om voorafgaand een onderzoek te laten uitvoeren. Deze problemen kunnen ondervangen worden door het verschuiven van het onderzoek naar het moment van de eigenlijke aanleg van de fundering van de mastvoeten. Daarom wordt voor de 19 geselecteerde mastvoeten een Archeologische Begeleiding (AB) volgens het protocol Opgraven geadviseerd. Hiermee wijkt het advies af van het vigerende PvE[34] voor dit onderzoek, waarin de vervolgstappen een

[34] de Visser 2013, p. 14.

archeologisch onderzoek in de vorm van een Inventariserend Veldonderzoek door middel van proefsleuven (IVO-P) wordt voorgesteld.

Voorafgaand aan de werkzaamheden dient per mastvoetlocatie een Programma van Eisen (PvE) te worden opgesteld, dat ter goedkeuring aan de bevoegde overheid in kader van de vergunningverlening aangeboden dient te worden.

Tabel 4. Adviestabel Mastvoetlocaties

Mastvoetlocatie	Advies	Vervolgonderzoek
1027	Op basis van de resultaten van het veldonderzoek wordt het niet nodig geacht om ter plaatse van mastvoetlocatie 1027 verder archeologisch onderzoek te laten uitvoeren.	Nee
1028	Op basis van de resultaten van het veldonderzoek wordt het niet nodig geacht om ter plaatse van mastvoetlocatie 1028 verder archeologisch onderzoek te laten uitvoeren.	Nee
1029	Op basis van de resultaten van het veldonderzoek wordt geadviseerd om ter plaatse van de mastvoetlocatie 1029 een vervolgonderzoek in de vorm van een Archeologische Begeleiding (AB) uit te laten voeren.	Ja
1030	Op basis van de resultaten van het veldonderzoek wordt het niet nodig geacht om ter plaatse van mastvoetlocatie 1030 verder archeologisch onderzoek te laten uitvoeren.	Nee
1031	Op basis van de resultaten van het veldonderzoek wordt het niet nodig geacht om ter plaatse van mastvoetlocatie 1031 verder archeologisch onderzoek te laten uitvoeren.	Nee
1032	Op basis van de resultaten van het veldonderzoek wordt het niet nodig geacht om ter plaatse van mastvoetlocatie 1032 verder archeologisch onderzoek te laten uitvoeren.	Nee
1033	Op basis van de resultaten van het veldonderzoek wordt geadviseerd om ter plaatse van de mastvoetlocatie 1033 een vervolgonderzoek in de vorm van een Archeologische Begeleiding (AB) uit te laten voeren.	Ja
1034	Op basis van de resultaten van het veldonderzoek wordt geadviseerd om ter plaatse van de mastvoetlocatie 1034 een vervolgonderzoek in de vorm van een Archeologische Begeleiding (AB) uit te laten voeren.	Ja
1035	Op basis van de resultaten van het veldonderzoek wordt geadviseerd om ter plaatse van de mastvoetlocatie 1035 een vervolgonderzoek in de vorm van een Archeologische Begeleiding (AB) uit te laten voeren.	Ja
1036	Op basis van de resultaten van het veldonderzoek wordt geadviseerd om ter plaatse van de mastvoetlocatie 1036 een vervolgonderzoek in de vorm van een Archeologische Begeleiding (AB) uit te laten voeren.	Ja
1037	Op basis van de resultaten van het veldonderzoek wordt het niet nodig geacht om ter plaatse van mastvoetlocatie 1037 verder archeologisch onderzoek te laten uitvoeren.	Nee
1038	Op basis van de resultaten van het veldonderzoek wordt geadviseerd om ter plaatse van de mastvoetlocatie 1038 een vervolgonderzoek in de vorm van een Archeologische Begeleiding (AB) uit te laten voeren.	Ja
1039	Op basis van de resultaten van het veldonderzoek wordt geadviseerd om ter plaatse van de mastvoetlocatie 1039 een vervolgonderzoek in de vorm van een Archeologische Begeleiding (AB) uit te laten voeren.	Ja
1039A	Op basis van de resultaten van het veldonderzoek wordt het niet nodig geacht om ter plaatse van mastvoetlocatie 1039A verder archeologisch onderzoek te laten uitvoeren.	Nee
1040	Op basis van de resultaten van het veldonderzoek wordt het niet nodig geacht om ter plaatse van mastvoetlocatie 1040 verder archeologisch onderzoek te laten uitvoeren.	Nee
1041	Op basis van de resultaten van het veldonderzoek wordt het niet nodig geacht om ter plaatse van mastvoetlocatie 1041 verder archeologisch onderzoek te laten uitvoeren.	Nee
1042	Op basis van de resultaten van het veldonderzoek wordt geadviseerd om ter	Ja

Mastvoetlocatie	Advies	Vervolgonderzoek
	plaatse van de mastvoetlocatie 1042 een vervolgonderzoek in de vorm van een Archeologische Begeleiding (AB) uit te laten voeren.	
1043	Op basis van de resultaten van het veldonderzoek wordt geadviseerd om ter plaatse van de mastvoetlocatie 1043 een vervolgonderzoek in de vorm van een Archeologische Begeleiding (AB) uit te laten voeren.	Ja
1044	Op basis van de resultaten van het veldonderzoek wordt geadviseerd om ter plaatse van de mastvoetlocatie 1044 een vervolgonderzoek in de vorm van een Archeologische Begeleiding (AB) uit te laten voeren.	Ja
1045	Op basis van de resultaten van het veldonderzoek wordt het niet nodig geacht om ter plaatse van mastvoetlocatie 1031 verder archeologisch onderzoek te laten uitvoeren.	Nee
1047	Op basis van de resultaten van het veldonderzoek wordt geadviseerd om ter plaatse van de mastvoetlocatie 1047 een vervolgonderzoek in de vorm van een Archeologische Begeleiding (AB) uit te laten voeren.	Ja
1048	Op basis van de resultaten van het veldonderzoek wordt geadviseerd om ter plaatse van de mastvoetlocatie 1048 een vervolgonderzoek in de vorm van een Archeologische Begeleiding (AB) uit te laten voeren.	Ja
1055	Op basis van de resultaten van het veldonderzoek wordt het niet nodig geacht om ter plaatse van mastvoetlocatie 1055 verder archeologisch onderzoek te laten uitvoeren.	Nee
1056	Op basis van de resultaten van het veldonderzoek wordt het niet nodig geacht om ter plaatse van mastvoetlocatie 1056 verder archeologisch onderzoek te laten uitvoeren.	Nee
1057	Op basis van de resultaten van het veldonderzoek wordt geadviseerd om ter plaatse van de mastvoetlocatie 1057 een vervolgonderzoek in de vorm van een Archeologische Begeleiding (AB) uit te laten voeren.	Ja
1058	Ter plaatse van de mastvoetlocatie werd recent reeds een proefsleuvenonderzoek uitgevoerd. Op basis van de resultaten van dit onderzoek kan geconcludeerd worden dat het veen hier wellicht grotendeels is weggraven tijdens de Middeleeuwen. Daarom wordt het niet noodzakelijk geacht om ter plaatse van mastvoetlocatie 1058 nog verder archeologisch onderzoek te laten uitvoeren.	Nee
1060	Op basis van de resultaten van het veldonderzoek wordt geadviseerd om ter plaatse van de mastvoetlocatie 1060 een vervolgonderzoek in de vorm van een Archeologische Begeleiding (AB) uit te laten voeren.	Ja
1061	In dien er bij het plaatsen van deze mastvoet niet dieper wordt gegraven dan 1.5 meter beneden het oorspronkelijke maaiveld, dan wordt geen verder onderzoek noodzakelijk geacht. Indien de fundering voor deze mastvoet toch beneden dit niveau dient te worden aangelegd, dan wordt geadviseerd om conform de AMZ-cyclus een archeologisch vervolgonderzoek te laten uitvoeren.	Nee met beperking
1062	Op basis van de resultaten van het veldonderzoek wordt geadviseerd om ter plaatse van de mastvoetlocatie 1062 een vervolgonderzoek in de vorm van een Archeologische Begeleiding (AB) uit te laten voeren.	Ja
1063	Op basis van de resultaten van het veldonderzoek wordt geadviseerd om ter plaatse van de mastvoetlocatie 1063 een vervolgonderzoek in de vorm van een Archeologische Begeleiding (AB) uit te laten voeren.	Ja
1064	Op basis van de resultaten van het veldonderzoek wordt geadviseerd om ter plaatse van de mastvoetlocatie 1064 een vervolgonderzoek in de vorm van een Archeologische Begeleiding (AB) uit te laten voeren.	Ja
1065	Op basis van de resultaten van het veldonderzoek wordt het niet nodig geacht om ter plaatse van mastvoetlocatie 1065 verder archeologisch onderzoek te laten uitvoeren.	Nee
1066	Op basis van de resultaten van het veldonderzoek wordt het niet nodig geacht om ter plaatse van mastvoetlocatie 1066 verder archeologisch onderzoek te laten uitvoeren.	Nee
1067	Op basis van de resultaten van het veldonderzoek wordt het niet nodig geacht om ter plaatse van mastvoetlocatie 1067 verder archeologisch onderzoek te laten uitvoeren.	Nee

Mastvoetlocatie	Advies	Vervolgonderzoek
1068	Op basis van de resultaten van het veldonderzoek wordt het niet nodig geacht om ter plaatse van mastvoetlocatie 1068 verder archeologisch onderzoek te laten uitvoeren.	Nee
1069	Op basis van de resultaten van het veldonderzoek wordt het niet nodig geacht om ter plaatse van mastvoetlocatie 1069 verder archeologisch onderzoek te laten uitvoeren.	Nee
1070	Op basis van de resultaten van het veldonderzoek wordt het niet nodig geacht om ter plaatse van mastvoetlocatie 1070 verder archeologisch onderzoek te laten uitvoeren.	Nee
1071	Op basis van de resultaten van het veldonderzoek wordt geadviseerd om ter plaatse van de mastvoetlocatie 1071 een vervolgonderzoek in de vorm van een Archeologische Begeleiding (AB) uit te laten voeren. Dit onderzoek is specifiek gericht op het opsporen van eventuele vindplaatsen op het niveau van het Laagpakket van Walcheren.	Ja
1072	Op basis van de resultaten van het veldonderzoek wordt geadviseerd om ter plaatse van de mastvoetlocatie 1072 een vervolgonderzoek in de vorm van een Archeologische Begeleiding (AB) uit te laten voeren. Dit onderzoek is specifiek gericht op het opsporen van eventuele vindplaatsen op het niveau van het Laagpakket van Walcheren.	Ja
1073	Op basis van de resultaten van het veldonderzoek kan geconcludeerd worden dat de bodemgesteldheid binnen de geplande mastvoet grotendeels verstoord is. Daarom wordt ter plaatse van mastvoetlocatie 1073 geen verder archeologisch onderzoek noodzakelijk geacht.	Nee
1074	Op basis van het veldonderzoek is de archeologische verwachting ter plaatse van mastvoet 1074 dus eerder laag. Daarom wordt hier geen verder archeologisch onderzoek geadviseerd.	Nee
1075	Op basis van het veldonderzoek is de archeologische verwachting ter plaatse van de geplande mastvoet 1075 dus als eerder laag te beschouwen. Daarom wordt hier geen verder archeologisch onderzoek geadviseerd.	Nee

De geplande verstoringsdiepte (met name 2.9 meter –mv voor een steunmast en 3.4 meter –mv voor een hoekmast) was te groot om invloed te kunnen hebben op dit advies. Ter plaatse van alle mastlocaties waar archeologisch vervolgonderzoek wordt geadviseerd zullen door de geplande werkzaamheden mogelijk archeologische niveaus worden geraakt.

Ten aanzien van de locaties waar geen vervolgonderzoek wordt geadviseerd kan het volgende worden opgemerkt. Het is niet uit te sluiten dat binnen deze niet verder te onderzoeken mastvoetlocaties er desondanks toch relevante archeologische vindplaatsen in de bodem verborgen zijn en dat deze in de uitvoeringsfase van de toekomstige graafwerkzaamheden aan het licht komen. Voor dergelijke vondsten bestaat een wettelijke meldingsplicht op grond van artikel 53 van de (herziene) Monumentenwet. Om er voor te zorgen dat aan deze wettelijke plicht wordt voldaan bij het eventueel aantreffen van sporen en/of vondsten tijdens de uitvoering van de werkzaamheden, wordt verzocht om navolgende tekst in het uitvoeringsbestek op te nemen:

Archeologie
Ondanks er bij het vooronderzoek geen behoudenswaardige archeologische waarden werden-aangetroffen, is niettemin de kans aanwezig dat archeologische sporen en vondsten in de bodem aanwezig zijn en dat deze in de uitvoeringsfase van de graaf- en inrichtingswerkzaamheden aan het licht komen. Voor dergelijke vondsten bestaat een wettelijke meldingsplicht ex. artikel 53 van de Monumentenwet. Bij graafwerkzaamheden dient men dan ook attent te zijn op eventuele vondsten. Opdrachtgever verplicht de aannemers om attent te zijn op eventuele vondsten en/of sporen tijdens de werkzaamheden en verplicht hen archeologische vondsten onverwijld te melden bij de bevoegde minister.

Bronnenlijst

Literatuur

Besteman, J.C., 1981: Mottes in the Netherlands. A provisional survey and inventory. In: T.J. Hoekstra et al. (red.), Liber Castellorum. 40 variaties op het thema kasteel, Zutphen, 40-59.

De Jong, J., Evelein, R., 2014. MER hoogspanningsverbinding Zuid-West 380kV. Achtergrond-document Archeologie, Eindconcept 25 maart 2014, The Missing Link 1220455, Woerden. Update van ArcheoLogic Rapport AL136 uit 2010 door J. de Jong (ArcheoLogic).

Dekker, C., 1971: Zuid-Beveland. De historische geografie en de instellingen van een Zeeuws eiland in de middeleeuwen. Assen.

de Visser, N.J.G., 2013. Programma van Eisen tbv het archeologisch onderzoek plangebied nieuwe Zuid-West 380 kV hoogspanningsverbinding Borssele-Tilburg, Grontmij Programma van Eisen, Definitief, Eindhoven. Update van P.C. Teekens, Programma van Eisen uit 2012 (Oranjewoud).

Louwe Kooijmans, L.P., 1974: The Rhine / Meuse delta. Four studies on its prehistoric occupation and Holocene geology. Analecta Praehistorica Leidensia, 7, Leiden.

Trimpe Burger, J.A., 1961: Beknopt overzicht van het oudheidkundig bodemonderzoek in het Deltagebied. Berichten van de Rijksdienst voor het Oudheidkundig Bodemonderzoek 10-11, p. 195-209.

Trimpe Burger, J.A., 1992: Opgravingen en vondsten Romeins Aardenburg. Aardenburg.

van den Broeke, P.W., 1996: Turfwinning en zoutwinning langs de Noordzeekust: een verbond sinds de IJzertijd? Tijdschrift voor Waterstaatsgeschiedenis 2, p. 48-59.

van Heeringen, R.M., 1986: Archeologische onderzoek van de Duivelsberg te Kapelle, Zuid-Beveland. Historisch Jaarboek voor Zuid-Beveland 12, p. 117-125.

van Heeringen, R.M., 1987: Archeologische Kroniek van Zeeland over 1987. Zeeuws Tijdschrift 37, p. 183-195.

van Heeringen, R.M., 1988: Archeologische Kroniek van Zeeland over 1987. Mededelingen van het Koninklijk Zeeuwsch Genootschap der Wetenschappen 1988, p. 129-147.

van Heeringen, R.M., 1991: Archeologische kroniek van Zeeland over 1990. Mededelingen van het Koninklijk Zeeuwsch Genootschap der Wetenschappen 1991, p. 123-145.

van Heeringen, R.M., 2005: Op zompig veen en stuivend zand. Nederzettingen in West-Nederland. In: L.P. Louwe Kooijmans et al. (red.), Nederland in de Prehistorie. Amsterdam, p. 581-596.

van Heeringen, R.M., P.A. Henderikx & A. Mars, 1995: Vroeg-Middeleeuwse ringwalburgen in Zeeland. Goes / Amersfoort.

Verhagen, J.H., 1984: Prehistorie en de vroegste geschiedenis van West-Brabant. Bijdragen tot de studie van het Brabants Heem 24, Waalre.

Verhart, L.B.M., 1990: Stone Age Bone and Antler Points as indicators for 'social territories' in the European Mesolithic, in: P.M. Vermeesch & Ph. Van Peer (red.), Contributions to the Mesolithic in Europe, Leuven, p. 139-151.

Vos, P.C. & R.M. van Heeringen, 1997: Holocene geology and occupation history of the Province of Zeeland. In: M.M. Fischer (red.), Holocene evolution of Zeeland (SW Netherlands). Mededelingen Nederlands Instituut voor Toegepaste Geowetenschappen TNO Nr. 59, Haarlem, p. 3-109.

Internetbronnen

Zuid – West 380 kV: http://www.zuid-west380kv.nl/ geraadpleegd op 21-04-2014.

Verklarende woordenlijst

Afkortingen

AB	Archeologische Begeleiding
AMK	Archeologische Monumentenkaart
ARCHIS	ARCHeologisch Informatie Systeem Archis 2
BP	before present (voor heden); C14 jaren; het nulpunt 'heden' is hierbij volgens internationale afspraak gesteld op 1950 (n.Chr.); de werkelijke kalender- of zonnejaren (gekalibreerde C14-jaren) zijn weergeven in jaren v.Chr. en n.Chr.
C14	koolstof 14, isotoop van het normale koolstof 12; radioactief element dat voor dateringsmethoden gebruikt wordt
IKAW	Indicatieve Kaart Archeologische Waarden
IVO-O	Inventariserend Veldonderzoek Overig. Alle overige vormen van inventariserend bodemonderzoek met uitzondering van booronderzoek (IVO-B) en proefsleuvenonderzoek (IVO-P)
IVO-P	Inventariserend Veldonderzoek door middel van proefsleuven
KNA	Kwaliteitsnorm Nederlandse Archeologie
NAP	Nieuw Amsterdams Peil
n. Chr.	na Christus
ROB	Rijksdienst voor Oudheidkundig Bodemonderzoek
RCE	Rijksdienst voor het Cultureel Erfgoed
RGD	Rijks Geologische Dienst (tegenwoordig onderdeel van TNO-NITG Bodem)
SCEZ	Stichting Cultureel Erfgoed Zeeland
StiBoKa	Stichting Bodem Kartering (tegenwoordig onderdeel van Alterra Wageningen)
v. Chr.	voor Christus

Woordenlijst

Antropogeen	door menselijk handelen
ARCHIS	het geautomatiseerde Archeologisch Informatiesysteem voor Nederland. Dit bestaat uit een databank waarin allerlei gegevens over archeologische vindplaatsen en terreinen in Nederland zijn opgeslagen, daterend van de Prehistorie tot de Nieuwe Tijd
AMK	digitaal bestand van alle bekende behoudenswaardige archeologische terreinen in Nederland dat door de RCE in samenwerking met de desbetreffende provincie is opgesteld. Op de kaart staan terreinen met archeologische status aangegeven. De kaart baseert zich op gegevens uit ARCHIS. Statustoekenning vindt plaats nadat het terrein is getoetst aan een aantal door de RCE gehanteerde criteria (kwaliteit, zeldzaamheid en contextwaarde)
Erosie	verzamelnaam voor processen die het aardoppervlak aantasten en los materiaal afvoeren. Dit vindt voornamelijk plaats door wind, ijs en stromend water
Geul	rivier- of kreekbedding
Holoceen	geologisch tijdvak, vroeger Alluvium genoemd, binnen het Quartair, van ongeveer 10.000 jaar geleden tot nu, met daarin o.a. het Mesolithicum, Neolithicum, de Bronstijd, de IJzertijd, de Romeinse tijd en de historische tijd
IKAW	de zogenaamde archeologische verwachtingskaart. Deze geeft een gebiedsindeling in drie categorieën weer op basis van de verwachting van archeologische vondsten (gebieden met een lage, midden, dan wel hoge –archeologische verwachting). De kaart is voornamelijk gebaseerd op het bodemtype
In situ	bewaard gebleven op de oorspronkelijke plaats. Dit met name met betrekking tot onverstoorde archeologische sporen en vondsten
Kwartair	geologische periode van 2 miljoen jaar geleden tot nu, de tijd van het menselijk leven op aarde, omvattend het Pleistoceen en het Holoceen
Moernering	veenafgraving, hoofdzakelijk ten behoeve van zoutwinning en de winning van brandstof (turf)
OM-nummer	het landelijk registratienummer ten behoeve van archeologisch onderzoek, uitgegeven door het Centraal Informatiesysteem
Pleistoceen	geologisch tijdvak binnen het Quartair, van ongeveer 2 miljoen jaar geleden tot 10.000 jaar geleden, met daarin o.a. de eerste mensensoorten en het Paleolithicum (oude steentijd)
Prehistorie	dat deel van de geschiedenis waarvan geen geschreven bronnen bewaard zijn gebleven
Sediment	afzetting gevormd door bezinksel of neerslag
Site	een plaats waar in het verleden menselijke activiteiten hebben plaatsgevonden
Tertiair	geologische periode van 65-2 miljoen jaar geleden, waarin zich de belangrijkste ontwikkelingen van de zoogdieren voordeden

Vindplaats	een ruimtelijk begrensd gebied waarbinnen zich archeologische informatie bevindt (monument, type monument, aard archeologische waarde, archeologische indicatie)
Vondst	alle soorten mobilia: roerende of roerend geraakte onderdelen van onroerende goederen afkomstig van archeologisch veldwerk of uit bestaande collecties
Weichselien	Geologische periode (laatste ijstijd, waarin het landijs Nederland niet bereikte) ca. 120.000-10.000 jaar geleden

Bijlage 1

Tijdstabel

Cal. jaren v/n Chr.	^{14}C jaren voor heden	Geologische perioden				Pollen zones	Archeologische perioden	
1950	0						Moderne tijd	
1500	500				Laat	Vb2		
1000	1000						Middeleeuwen	Laat
								Vroeg
500	1500			Subatlanticum	Midden	Vb1		
			Laat				Romeinse tijd	
0	2000							Laat
							IJzertijd	Midden
500	2500				Vroeg	Va		Vroeg
1000								Laat
	3000						Bronstijd	Midden
1500					Laat	IVb		
	3500							Vroeg
2000								
2500	4000			Subboreaal				Laat
					Midden	IVa		
3000	4500							
					Vroeg		Neolithicum	Midden
3500								
	5000							
4000								
					Laat			
4500	5500							Vroeg
5000	6000			Atlanticum		III		
					Midden			
6000	7000							Laat
					Vroeg		Mesolithicum	Midden
7000	8000							
				Boreaal		II		
8000	9000		Vroeg					Vroeg
				Preboreaal		I		
9500	10000							
						LW III		
11750	11000	Pleistoceen		Laat-Glaciaal		LW II	Laat-Paleolithicum	
						LW I		

Bijlage 2

Boorstaten

Mastvoetlocatie 1027

BORING	**27.B03**	X	47.455
		Y	388.227
BESCHRIJVER	F. D'hondt	Z	-1,04

meter - mv	meter tov NAP	Beschrijving	Lithostratigrafie
0,30	-1,34	Klei, matig siltig matig stevig, donkerbruingrijs, graswortels	Bouwvoor
1,35	-2,39	klei, zwak siltig, matig stevig, grijs, enkele roestvlekken	Laagpakket van Walcheren
1,50	-2,54	klei, zwak siltig, matig slap, grijs, donkergrijs gevlekt, enkele roestvlekken, veenbrokken	Moernering
1,60	-2,64	veen, donkerbruin, matig amorf, riet	Hollandveen Laagpakket
2,00	-3,04	klei, zwak siltig, slap, lichtblauwgrijs, riet	Laagpakket van Wormer

BORING	**27.B04**	X	47.469
		Y	388.215
BESCHRIJVER	F. D'hondt	Z	-0,99

meter - mv	meter tov NAP	Beschrijving	Lithostratigrafie
0,35	-1,34	klei, zwak siltig, matig stevig, donkerbruin, graswortels	Bouwvoor
1,37	-2,36	klei, matig zandig, matig slap, grijs, enkele roestvlekken, heterogeen	Moernering
1,40	-2,39	veen, donkerbruin, matig amorf, riet	Hollandveen Laagpakket
2,00	-2,99	klei, zwak siltig, slap, lichtblauwgrijs, riet,	Laagpakket van Wormer

BORING	**27.B06**	X	47.463
		Y	388.236
BESCHRIJVER	F. D'hondt	Z	-1,05

meter - mv	meter tov NAP	Beschrijving	Lithostratigrafie
0,30	-1,35	klei, zwak siltig, matig stevig, donkerbruin, graswortels	Bouwvoor
0,85	-1,90	klei, zwak siltig, matig stevig, grijs, enkele roestvlekken, onderin donkerbruingrijs en zwak venig	Laagpakket van Walcheren
1,00	-2,05	veen, zwart, sterk amorf, geoxideerd	Hollandveen Laagpakket: intact
1,40	-2,45	veen, donkerbruin, matig amorf, onderin riet	Hollandveen Laagpakket
2,00	-3,05	klei, zwak siltig, slap, lichtblauwgrijs, riet	Laagpakket van Wormer

BORING	**27.B07**	X	47.450
		Y	388.247
BESCHRIJVER	F. D'hondt	Z	-1,30

meter - mv	meter tov NAP	Beschrijving	Lithostratigrafie
0,30	-1,60	klei, zwak siltig, matig stevig, donkerbruin, graswortels	Bouwvoor
0,70	-2,00	klei, zwak siltig, matig stevig, grijs, enkele roestvlekken	Laagpakket van Walcheren
1,30	-2,60	klei, zwak siltig, matig slap, grijs, enkele roestvlekken, veenbrokken	Moernering
1,40	-2,70	veen, donkerbruin, matig amorf, onderin riet	Hollandveen Laagpakket
2,00	-3,30	klei, zwak siltig, slap, lichtblauwgrijs, riet	Laagpakket van Wormer

Mastvoetlocatie 1028

BORING	**28.B03**	X	47.709
		Y	388.538
BESCHRIJVER	F. D'hondt	Z	-0,89

meter - mv	meter tov NAP	Beschrijving	Lithostratigrafie
0,30	-1,19	klei, zwak zandig, donkerbruin	Bouwvoor
1,05	-1,94	klei, zwak siltig, matig stevig, grijs, enkele roestvlekken, donkergrijs gevlekt	Moernering
1,06	-1,95	veen, zwart	Hollandveen Laagpakket
2,00	-2,89	klei, sterk siltig, slap, lichtblauwgrijs, fijne zandlaagjes, bovenin riet	Laagpakket van Wormer

BORING	**28.B04**	X	47.718
		Y	388.523
BESCHRIJVER	F. D'hondt	Z	-1,25

meter - mv	meter tov NAP	Beschrijving	Lithostratigrafie
0,30	-1,55	klei, zwak zandig, donkerbruin	Bouwvoor
0,80	-2,05	klei, zwak siltig, matig stevig, grijs, enkele roestvlekken, donkergrijs gevlekt, vanaf 0,65 matig slap	Moernering
0,82	-2,07	veen, donkerbruin,	Hollandveen Laagpakket
2,00	-3,25	klei, sterk siltig, slap, donkergrijs, zandlaagjes, riet	Laagpakket van Wormer

BORING	**28.B06**		
		X	47.699
		Y	388.526
BESCHRIJVER	F. D'hondt	Z	-1,04

meter - mv	meter tov NAP	Beschrijving	Lithostratigrafie
0,70	-1,74	klei, zwak zandig, bruingrijs, heterogeen	Vergraven
1,05	-2,09	klei, zwak siltig, matig stevig, donkergrijs, zwak humeus	Slootvulling
1,15	-2,19	klei, zwak siltig, matig stevig, grijs, spoor roestvlekken, donkergrijs gevlekt	Moernering
1,25	-2,29	veen, donkerbruin, matig amorf, riet	Hollandveen Laagpakket
2,00	-3,04	klei, zwak siltig, slap, lichtblauwgrijs, riet	Laagpakket van Wormer

BORING	**28.B07**	X	47.690
		Y	388.541
BESCHRIJVER	F. D'hondt	Z	-0,68

meter - mv	meter tov NAP	Beschrijving	Lithostratigrafie
0,30	-0,98	klei, zwak zandig, matig stevig, donkerbruin	Bouwvoor
0,65	-1,33	klei, zwak siltig, matig stevig, grijs, enkele roestvlekken	Laagpakket van Walcheren
1,55	-2,23	klei, matig siltig, matig stevig, grijs, enkele roestvlekken, onderin blauwgrijs	Laagpakket van Walcheren
2,05	-2,73	veen, donkerbruin, matig amorf, onderin riet	Hollandveen Laagpakket
3,00	-3,68	klei, zwak siltig, slap, lichtblauwgrijs, riet	Laagpakket van Wormer

Mastvoetlocatie 1029

BORING	**29.B03**	X	48.004
		Y	388.753
BESCHRIJVER	F. D'hondt	Z	-0,65

meter - mv	meter tov NAP	Beschrijving	Lithostratigrafie
0,30	-0,95	klei, zwak siltig, matig stevig, donkerbruingrijs	Bouwvoor
1,05	-1,70	klei, zwak zandig, matig stevig, bruingrijs, enkele roest-vlekken, zandlagen, heterogeen	Moernering
1,07	-1,72	veen, donkerbruin, mam	Hollandveen Laagpakket
2,00	-2,65	klei, zwak siltig, matig slap, grijs, riet, zandlagen	Laagpakket van Wormer

BORING	**29.B04**	X	48.010
		Y	388.737
BESCHRIJVER	F. D'hondt	Z	-0,72

meter - mv	meter tov NAP	Beschrijving	Lithostratigrafie
0,30	-1,02	klei, zwak siltig, matig stevig, donkerbruingrijs	Bouwvoor
0,90	-1,62	klei, zwak zandig, matig stevig, grijs, enkele roestvlekken	Laagpakket van Walcheren
1,05	-1,77	klei, zwak siltig, matig stevig, grijs, matig humeus, venig	Laagpakket van Walcheren
1,25	-1,97	veen, zwart, sterk amorf, geoxideerd, sterk veraard	Hollandveen Laagpakket: intact
1,60	-2,32	veen, donkerbruin, sterk amorf	Hollandveen Laagpakket
1,80	-2,52	veen, bruin, matig amorf, riet	Hollandveen Laagpakket
2,00	-2,72	klei, zwak siltig, slap, lichtblauwgrijs, riet	Laagpakket van Wormer

BORING	**29.B06**	X	47.992
		Y	388.743
BESCHRIJVER	F. D'hondt	Z	-0,73

meter - mv	meter tov NAP	Beschrijving	Lithostratigrafie
0,30	-1,03	klei, zwak siltig, matig stevig, donkerbruingrijs	Bouwvoor
1,00	-1,73	klei, zwak siltig, matig stevig, bruingrijs, enkele roest-vlekken	Laagpakket van Walcheren
1,05	-1,78	klei, zwak siltig, matig stevig, donkergrijs, sterk venig	Laagpakket van Walcheren
1,15	-1,88	veen, zwart, sterk amorf, geoxideerd, sterk veraard	Hollandveen Laagpakket: intact
1,35	-2,08	veen, donkerbruin, matig amorf	Hollandveen Laagpakket
2,00	-2,73	klei, zwak siltig, slap, lichtblauwgrijs, riet	Laagpakket van Wormer

BORING	**29.B07**	X	47.985
		Y	388.760
BESCHRIJVER	F. D'hondt	Z	-0,69

meter - mv	meter tov NAP	Beschrijving	Lithostratigrafie
0,40	-1,09	klei, zwak siltig, matig stevig, donkerbruingrijs	Bouwvoor
1,10	-1,79	klei, zwak siltig, matig stevig, bruingrijs, enkele roest-vlekken	Laagpakket van Walcheren
2,50	-3,19	klei, sterk zandig, matig slap, blauwgrijs, zandlagen	Laagpakket van Walcheren
3,00	-3,69	klei, zwak siltig, slap, lichtblauwgrijs, riet, verslagen top	Laagpakket van Wormer

Mastvoetlocatie 1030

BORING	**30.B03**	X	48.299
		Y	388.972
BESCHRIJVER	F. D'hondt	Z	-0,70

meter - mv	meter tov NAP	Beschrijving	Lithostratigrafie
0,35	-1,05	klei, zwak siltig, matig stevig, donkerbruingrijs, donker-blauwgrijs gevlekt	Bouwvoor
1,00	-1,70	klei, zwak siltig, matig stevig, bruingrijs, enkele roest-vlekken, donkergrijs gevlekt	Moernering
1,83	-2,53	klei, zwak siltig, matig slap, grijs, enkele roestvlekken, heterogeen, veenbrokken	Moernering
1,86	-2,56	veen, donkerbruin	Hollandveen Laagpakket
2,00	-2,70	klei, zwak siltig, slap, lichtblauwgrijs, riet	Laagpakket van Wormer

BORING	**30.B04**	X	48.306
		Y	388.955
BESCHRIJVER	F. D'hondt	Z	-0,90

meter - mv	meter tov NAP	Beschrijving	Lithostratigrafie
0,30	-1,20	klei, zwak siltig, matig stevig, donkerbruingrijs, donker-blauwgrijs gevlekt	Bouwvoor
0,75	-1,65	klei, zwak siltig, matig stevig, grijsbruin, enkele roest-vlekken	Vergraven
1,45	-2,35	klei, matig zandig, matig slap, grijs, spoor roestvlekken, fragmenten schelpmateriaal,	Laagpakket van Walcheren
2,00	-2,90	klei, zwak siltig, slap, blauwgrijs, riet, zandlaagjes	Laagpakket van Wormer

BORING	**30.B06**	X	48.287
		Y	388.962
BESCHRIJVER	F. D'hondt	Z	-0,77

meter - mv	meter tov NAP	Beschrijving	Lithostratigrafie
0,30	-1,07	klei, zwak siltig, matig stevig, donkerbruingrijs, donker-blauwgrijs gevlekt	Bouwvoor
1,00	-1,77	klei, zwak siltig, matig stevig, bruingrijs, enkele roest-vlekken, donkergrijs gevlekt	Moernering
1,35	-2,12	klei, zwak siltig, slap, grijs, heterogeen	Moernering
1,42	-2,19	veen, donkerbruin, matig amorf	Hollandveen Laagpakket
2,00	-2,77	klei, zwak siltig, slap, lichtblauwgrijs, riet	Laagpakket van Wormer

BORING	**30.B07**	X	48.280
		Y	388.978
BESCHRIJVER	F. D'hondt	Z	-0,78

meter - mv	meter tov NAP	Beschrijving	Lithostratigrafie
0,30	-1,08	klei, zwak siltig, matig stevig, donkerbruingrijs, donker-blauwgrijs gevlekt	Bouwvoor
0,75	-1,53	klei, sterk zandig, matig stevig, grijs, enkele roestvlek-ken, fragmenten schelpmateriaal	Laagpakket van Walcheren
0,80	-1,58	klei, zwak siltig, grijs, matig humeus, venig	Laagpakket van Walcheren
1,00	-1,78	veen, zwart, matig amorf, geoxideerd	Hollandveen Laagpakket: intact
1,25	-2,03	veen, donkerbruin, matig amorf, hout	Hollandveen Laagpakket
1,85	-2,63	veen, bruin, matig amorf, riet	Hollandveen Laagpakket
2,00	-2,78	klei, zwak siltig, slap, lichtblauwgrijs, riet	Laagpakket van Wormer

Mastvoetlocatie 1031

BORING	**31.B02**	X	48.591
		Y	389.202
BESCHRIJVER	F. D'hondt	Z	-1,18

meter - mv	meter tov NAP	Beschrijving	Lithostratigrafie
0,30	-1,48	klei, zwak siltig, matig stevig, donkerbruingrijs	Bouwvoor
0,45	-1,63	klei, zwak siltig, matig stevig, donkergrijs, heterogeen	Vergraven
1,45	-2,63	klei, zwak siltig, matig stevig, lichtgroengrijs, enkele roestvlekken, donkergrijs gevlekt, veenbrokken	Moernering
1,47	-2,65	veen, donkerbruin, matig amorf	Hollandveen Laagpakket
2,00	-3,18	klei, zwak siltig, slap, grijs, riet	Laagpakket van Wormer

BORING	**31.B03**	X	48.582
		Y	389.184
BESCHRIJVER	F. D'hondt	Z	-1,13

meter - mv	meter tov NAP	Beschrijving	Lithostratigrafie
0,35	-1,48	klei, zwak siltig, matig stevig, donkerbruingrijs	Bouwvoor
1,20	-2,33	klei, zwak siltig, matig stevig, grijs, enkele roestvlekken, veenbrokken	Moernering
1,25	-2,38	veen, donkerbruin, matig amorf, riet	Hollandveen Laagpakket
2,00	-3,13	klei, zwak siltig, slap, lichtblauwgrijs, riet	Laagpakket van Wormer

BORING	**31.B04**	X	48.595
		Y	389.188
BESCHRIJVER	F. D'hondt	Z	-1,22

meter - mv	meter tov NAP	Beschrijving	Lithostratigrafie
0,35	-1,57	klei, zwak siltig, matig stevig, donkerbruingrijs	Bouwvoor
0,70	-1,92	klei, zwak siltig, matig stevig, grijs, donkergrijs gevlekt, heterogeen	Vergraven
1,25	-2,47	klei, zwak zandig, matig slap, donkergrijs, zwak humeus	Opgebracht
2,00	-3,22	klei, zwak siltig, lichtblauwgrijs, riet	Laagpakket van Wormer

BORING	**31.B05**	X	48.585
		Y	389.167
BESCHRIJVER	F. D'hondt	Z	-1,08

meter - mv	meter tov NAP	Beschrijving	Lithostratigrafie
0,35	-1,43	klei, zwak siltig, matig stevig, donkerbruingrijs	Bouwvoor
0,50	-1,58	klei, zwak siltig, matig stevig, grijs, heterogeen	Vergraven
1,48	-2,56	klei, zwak siltig, matig stevig, grijs, enkele roestvlekken, donkergrijs gevlekt, veenbrokken	Moernering
1,52	-2,60	veen, donkerbruin, matig amorf, riet	Hollandveen Laagpakket
2,00	-3,08	klei, zwak siltig, slap, lichtblauwgrijs, riet	Laagpakket van Wormer

Mastvoetlocatie 1032

BORING	**32.B03**	X	48.940
		Y	389.111
BESCHRIJVER	F. D'hondt	Z	-1,24

meter - mv	meter tov NAP	Beschrijving	Lithostratigrafie
0,30	-1,54	klei, zwak siltig, matig stevig, donkerbruingrijs	Bouwvoor
1,25	-2,49	klei, zwak siltig, matig stevig, donkerbruingrijs, hetero-geen	Opgebracht
2,00	-3,24	klei, zwak siltig, slap, zwart, sterk humeus, slib	Slootvulling

BORING	**32.B04**	X	48.925
		Y	389.098
BESCHRIJVER	F. D'hondt	Z	-1,28

meter - mv	meter tov NAP	Beschrijving	Lithostratigrafie
0,30	-1,58	klei, zwak siltig, matig stevig, donkerbruingrijs	Bouwvoor
1,00	-2,28	klei, zwak siltig, matig stevig, grijs, heterogeen, zwart gevlekt	Moernering
1,05	-2,33	veen, donkerbruin, matig amorf	Hollandveen Laagpakket
2,00	-3,28	klei, zwak siltig, slap, blauwgrijs, riet	Laagpakket van Wormer

BORING	**32.B06**	X	48.927

		Y	389.114
BESCHRIJVER	F. D'hondt	Z	-1,15

meter - mv	meter tov NAP	Beschrijving	Lithostratigrafie
0,30	-1,45	klei, zwak siltig, matig stevig, donkerbruingrijs	Bouwvoor
1,05	-2,20	klei, zwak siltig, matig stevig, grijs, donkergrijs gevlekt	Moernering
1,10	-2,25	veen, zwart, matig amorf	Hollandveen Laagpakket
1,40	-2,55	klei, zwak siltig, slap, bruingrijs, riet	Laagpakket van Wormer
2,00	-3,15	klei, zwak siltig, slap, lichtblauwgrijs, riet	Laagpakket van Wormer

BORING	**32.B07**	X	48.930
		Y	389.130
BESCHRIJVER	F. D'hondt	Z	-1,16

meter - mv	meter tov NAP	Beschrijving	Lithostratigrafie
0,30	-1,46	klei, zwak siltig, matig stevig, donkerbruingrijs	Bouwvoor
0,95	-2,11	klei, zwak siltig, matig stevig, grijs, zwart gevlekt, enkele roestvlekken	Moernering
1,05	-2,21	klei, zwak siltig, slap, grijs, veenbrokken	Moernering
1,15	-2,31	veen, donkerbruin, matig amorf	Hollandveen Laagpakket
2,00	-3,16	klei, zwak siltig, slap, lichtblauwgrijs, riet	Laagpakket van Wormer

Mastvoetlocatie 1033

BORING	**33.B02**	X	49.294
		Y	389.053
BESCHRIJVER	F. D'hondt	Z	-1,07

meter - mv	meter tov NAP	Beschrijving	Lithostratigrafie
0,35	-1,42	klei, zwak siltig, matig stevig, donkerbruingrijs	Bouwvoor
1,60	-2,67	klei, matig siltig, matig stevig, grijs, enkele roestvlekken, fragmenten schelpmateriaal, donkergrijs gevlekt	Moernering
1,63	-2,70	veen, donkerbruin	Hollandveen Laagpakket
2,00	-3,07	klei, zwak siltig, slap, donkergrijs, riet	Laagpakket van Wormer

BORING	**33.B03**	X	49.291
		Y	389.037
BESCHRIJVER	F. D'hondt	Z	-1,04

meter - mv	meter tov NAP	Beschrijving	Lithostratigrafie
0,40	-1,44	klei, zwak siltig, matig stevig, donkerbruingrijs	Bouwvoor
0,90	-1,94	klei, zwak siltig, matig stevig, grijs, enkele roestvlekken, fragmenten schelpmateriaal	Laagpakket van Walcheren
1,00	-2,04	klei, zwak siltig, matig stevig, donkergrijs, sterk venig	Laagpakket van Walcheren
1,20	-2,24	veen, zwart, sterk amorf, geoxideerd, sterk veraard, op 1,05 houtskoollaagje	Hollandveen Laagpakket: intact
1,60	-2,64	veen, donkerbruin, matig amorf	Hollandveen Laagpakket
2,00	-3,04	Klei, matig siltig, slap, blauwgrijs, riet	Laagpakket van Wormer

BORING	**33.B06**	X	49.279
		Y	389.040
BESCHRIJVER	F. D'hondt	Z	-0,96

meter - mv	meter tov NAP	Beschrijving	Lithostratigrafie
0,35	-1,31	klei, zwak siltig, matig stevig, donkerbruingrijs	Bouwvoor
0,80	-1,76	klei, zwak siltig, matig stevig, grijs, spoor roestvlekken	Laagpakket van Walcheren
1,00	-1,96	klei, zwak siltig, matig stevig, grijs, enkele roestvlekken	Laagpakket van Walcheren
1,20	-2,16	veen, zwart, sterk amorf, geoxideerd, sterk veraard	Hollandveen Laagpakket: intact
1,80	-2,76	veen, donkerbruin, matig amorf	Hollandveen Laagpakket
1,95	-2,91	veen, bruin, matig amorf, riet	Hollandveen Laagpakket
2,50	-3,46	klei, zwak siltig, slap, grijs, riet	Laagpakket van Wormer

BORING	**33.B07**	X	49.274
		Y	389.022
BESCHRIJVER	F. D'hondt	Z	-1,11

meter - mv	meter tov NAP	Beschrijving	Lithostratigrafie
0,30	-1,41	Klei, zwak siltig, matig stevig, bruin, rode puinbrokjes	Bouwvoor
0,80	-1,91	klei, zwak siltig, matig stevig, donkerbruingrijs	Bouwvoor
1,00	-2,11	klei, zwak siltig, matig stevig, grijs, spoor roestvlekken	Laagpakket van Walcheren
1,25	-2,36	klei, zwak siltig, matig stevig, grijs, enkele roestvlekken	Laagpakket van Walcheren
1,40	-2,51	veen, zwart, matig amorf, geoxideerd, sterk veraard	Hollandveen Laagpakket: intact
1,70	-2,81	veen, donkerbruin, matig amorf, riet	Hollandveen Laagpakket
2,00	-3,11	klei, matig siltig, slap, donkergrijs, riet	Laagpakket van Wormer

Mastvoetlocatie 1034

BORING	**34.B02**	X	49.650
		Y	388.978
BESCHRIJVER	F. D'hondt	Z	-1,37

meter - mv	meter tov NAP	Beschrijving	Lithostratigrafie
0,30	-1,67	klei, zwak siltig, donkerbruingrijs	Bouwvoor
0,75	-2,12	klei, zwak siltig, matig stevig, grijs, enkele roestvlekken	Laagpakket van Walcheren
0,85	-2,22	veen, sterk kleiig, zwart, matig amorf	Hollandveen Laagpakket: intact
1,20	-2,57	zand, matig siltig, zeer fijn, grijs, riet	Laagpakket van Wormer: rug
2,00	-3,37	klei, zwak siltig, slap, blauwgrijs, riet	Laagpakket van Wormer

BORING	**34.B03**	X	49.648
		Y	388.961
BESCHRIJVER	F. D'hondt	Z	-1,45

meter - mv	meter tov NAP	Beschrijving	Lithostratigrafie
0,30	-1,75	klei, zwak siltig, donkerbruingrijs	Bouwvoor
0,90	-2,35	klei, zwak siltig, matig stevig, grijs, enkele roestvlekken	Laagpakket van Walcheren
1,20	-2,65	klei, zwak siltig, slap, donkergrijs, sterk venig	Laagpakket van Walcheren
1,45	-2,90	veen, donkerbruin, matig amorf, geoxideerd, sterk ver-aard	Hollandveen Laagpakket: intact
2,00	-3,45	klei, zwak siltig, slap, grijs, riet	Laagpakket van Wormer

BORING	**34.B05**	X	49.631
		Y	388.947
BESCHRIJVER	F. D'hondt	Z	-1,56

meter - mv	meter tov NAP	Beschrijving	Lithostratigrafie
0,30	-1,86	klei, zwak siltig, donkerbruingrijs	Bouwvoor
0,55	-2,11	klei, zwak siltig, matig stevig, grijs, enkele roestvlekken	Laagpakket van Walcheren
0,80	-2,36	veen, zwart, matig amorf, geoxideerd, sterk veraard	Hollandveen Laagpakket: intact
1,20	-2,76	veen, donkerbruin, matig amorf	Hollandveen Laagpakket
1,35	-2,91	veen, bruin, matig amorf, riet	Hollandveen Laagpakket
1,60	-3,16	klei, zwak siltig, slap, grijs, riet	Laagpakket van Wormer
2,00	-3,56	klei, zwak siltig, slap, lichtblauwgrijs, riet	Laagpakket van Wormer

BORING	**34.B06**	X	49.634
		Y	388.964
BESCHRIJVER	F. D'hondt	Z	-1,40

meter - mv	meter tov NAP	Beschrijving	Lithostratigrafie
0,30	-1,70	klei, zwak siltig, donkerbruingrijs	Bouwvoor
0,90	-2,30	klei, zwak siltig, matig stevig, grijs, enkele roestvlekken	Laagpakket van Walcheren
1,00	-2,40	klei, matig siltig, slap, grijs, veenbrokken	Laagpakket van Walcheren
1,25	-2,65	veen, zwart, matig amorf, geoxideerd, sterk veraard	Hollandveen Laagpakket: intact
1,60	-3,00	klei, zwak siltig, slap, grijs, riet	Laagpakket van Wormer
2,00	-3,40	klei, zwak siltig, slap, lichtblauwgrijs, riet	Laagpakket van Wormer

Mastvoetlocatie 1035

BORING	**35.B02**	X	50.015
		Y	388.901
BESCHRIJVER	F. D'hondt	Z	-1,38

meter - mv	meter tov NAP	Beschrijving	Lithostratigrafie
0,35	-1,73	klei, zwak siltig, matig stevig, donkerbruingrijs, enkele puinspikkels	Bouwvoor
0,85	-2,23	klei, zwak siltig, matig stevig, grijs, veel roestvlekken	Laagpakket van Walcheren
1,10	-2,48	veen, zwart, matig amorf, geoxideerd, sterk veraard	Hollandveen Laagpakket: intact
1,45	-2,83	veen, donkerbruin, matig amorf, onderin riet	Hollandveen Laagpakket
2,00	-3,38	klei, zwak siltig, slap, blauwgrijs, riet	Laagpakket van Wormer

BORING	**35.B03**	X	50.012
		Y	388.883
BESCHRIJVER	F. D'hondt	Z	-1,36

meter - mv	meter tov NAP	Beschrijving	Lithostratigrafie
0,40	-1,76	klei, zwak siltig, matig stevig, donkerbruingrijs	Bouwvoor
1,20	-2,56	klei, zwak siltig, matig stevig, grijs, enkele roestvlekken, heterogeen	Moernering
1,50	-2,86	veen, donkerbruin, matig amorf	Hollandveen Laagpakket
1,90	-3,26	klei, zwak siltig, slap, bruingrijs, riet	Laagpakket van Wormer
2,00	-3,36	klei, zwak siltig, slap, lichtblauwgrijs, riet	Laagpakket van Wormer

BORING	**35.B06**	X	49.999
		Y	388.887
BESCHRIJVER	F. D'hondt	Z	-1,35

meter - mv	meter tov NAP	Beschrijving	Lithostratigrafie
0,35	-1,70	klei, zwak siltig, matig stevig, donkerbruingrijs	Bouwvoor
1,20	-2,55	klei, zwak siltig, matig stevig, grijs, enkele roestvlekken, onderin heterogeen	Moernering
1,30	-2,65	veen, donkerbruin, matig amorf	Hollandveen Laagpakket
1,60	-2,95	klei, zwak siltig, slap, grijs, riet	Laagpakket van Wormer
2,00	-3,35	klei, zwak siltig, slap, lichtblauwgrijs, riet	Laagpakket van Wormer

BORING	**35.B07**	X	49.996
		Y	388.870
BESCHRIJVER	F. D'hondt	Z	-1,40

meter - mv	meter tov NAP	Beschrijving	Lithostratigrafie
0,30	-1,70	klei, zwak siltig, matig stevig, donkerbruingrijs	Bouwvoor
0,40	-1,80	klei, zwak siltig, matig stevig, donkergrijs, heterogeen	Vergraven
0,85	-2,25	klei, zwak siltig, matig stevig, grijs, enkele roestvlekken	Laagpakket van Walcheren
1,25	-2,65	veen, zwart, matig amorf, geoxideerd, sterk veraard	Hollandveen Laagpakket: intact
1,60	-3,00	klei, zwak siltig, slap, grijs, riet	Laagpakket van Wormer
2,00	-3,40	klei, zwak siltig, slap, lichtblauwgrijs, riet	Laagpakket van Wormer

Mastvoetlocatie 1036

BORING	**36.B01**	X	50.406
		Y	388.816
BESCHRIJVER	F. D'hondt	Z	-1,53

meter - mv	meter tov NAP	Beschrijving	Lithostratigrafie
0,35	-1,88	klei, matig stevig, donkerbruingrijs, donkerblauw gevlekt	Bouwvoor
0,50	-2,03	klei, matig stevig, grijs, enkele roestvlekken, heterogeen	Vergraven
0,80	-2,33	klei, matig zandig, matig stevig, donkerbruin, zwak humeus, vanaf 0,75 gemengd met grijze klei	Opgebracht
1,35	-2,88	veen, zwart, matig amorf, geoxideerd, sterk veraard	Hollandveen Laagpakket: intact
2,00	-3,53	klei, zwak siltig, slap, blauwgrijs, riet	Laagpakket van Wormer

BORING	**36.B02**	X	50.400
		Y	388.801
BESCHRIJVER	F. D'hondt	Z	-1,61

meter - mv	meter tov NAP	Beschrijving	Lithostratigrafie
0,30	-1,91	klei, matig stevig, donkerbruingrijs, donkerblauw gevlekt	Bouwvoor
0,50	-2,11	klei, zwak siltig, matig stevig, grijs, enkele roestvlekken	Opgebracht
0,65	-2,26	klei, zwak zandig, matig stevig, donkerbruin, zwak humeus	Opgebracht
0,75	-2,36	klei, zwak siltig, matig stevig, grijs, enkele roestvlekken	Laagpakket van Walcheren
1,20	-2,81	veen, zwart, matig amorf, geoxideerd, sterk veraard	Hollandveen Laagpakket: intact
1,40	-3,01	veen, donkerbruin, matig amorf, riet	Hollandveen Laagpakket
2,00	-3,61	klei, zwak siltig, slap, blauwgrijs, riet, bovenin veenband	Laagpakket van Wormer

BORING	**36.B04**	X	50.381
		Y	388.792
BESCHRIJVER	F. D'hondt	Z	-1,55

meter - mv	meter tov NAP	Beschrijving	Lithostratigrafie
0,30	-1,85	klei, matig stevig, donkerbruingrijs, donkerblauw gevlekt	Bouwvoor
0,95	-2,50	klei, zwak siltig, matig stevig, grijs, enkele roestvlekken, heterogeen, donkergrijs gevlekt	Moernering
1,20	-2,75	veen, donkerbruin, matig amorf, sterk veraard	Hollandveen Laagpakket: intact
1,40	-2,95	klei, zwak siltig, slap, donkerbruingrijs, sterk venig, riet	Laagpakket van Wormer
2,00	-3,55	klei, zwak siltig, slap, blauwgrijs, riet	Laagpakket van Wormer

BORING	**36.B05**	X	50.388
		Y	388.809
BESCHRIJVER	F. D'hondt	Z	-1,56

meter - mv	meter tov NAP	Beschrijving	Lithostratigrafie
0,35	-1,91	klei, matig stevig, donkerbruingrijs, donkerblauw gevlekt	Bouwvoor
0,80	-2,36	klei, zwak siltig, matig stevig, grijs, enkele roestvlekken	Moernering
0,95	-2,51	klei, zwak siltig, matig slap, grijs, veenbrokken	Moernering
1,20	-2,76	veen, donkerbruin, matig amorf, bovenaan sterk veraard	Hollandveen Laagpakket: intact
1,40	-2,96	klei, zwak siltig, slap, grijsbruin, sterk venig, riet	Laagpakket van Wormer
2,00	-3,56	klei, zwak siltig, slap, blauwgrijs, riet	Laagpakket van Wormer

Mastvoetlocatie 1037

BORING	**37.B03**	X	50.684
		Y	388.576
BESCHRIJVER	F. D'hondt	Z	-1,01

meter - mv	meter tov NAP	Beschrijving	Lithostratigrafie
0,30	-1,31	klei, zwak siltig, stevig, donkerbruingrijs	Bouwvoor
1,50	-2,51	klei, zwak siltig, stevig, grijs, spoor roestvlekken, donkergrijs gevlekt	Moernering
1,85	-2,86	klei, zwak siltig, matig stevig, blauwgrijs, heterogeen	Moernering
2,05	-3,06	veenbrok	Moernering
2,08	-3,09	veen, bruin, zwak amorf, riet	Hollandveen Laagpakket
2,30	-3,31	klei, zwak siltig, slap, bruin, riet	Laagpakket van Wormer
3,00	-4,01	klei, zwak siltig, slap, lichtblauwgrijs, riet	Laagpakket van Wormer

BORING	**37.B04**	X	50.670
		Y	388.566
BESCHRIJVER	F. D'hondt	Z	-0,94

meter - mv	meter tov NAP	Beschrijving	Lithostratigrafie
0,25	-1,19	klei en veen, sterk humeus	Opgebracht
0,60	-1,54	klei, zwak siltig, stevig, donkerbruingrijs,	Bouwvoor
1,40	-2,34	klei, zwak siltig, stevig, grijs, spoor roestvlekken, donkergrijs gevlekt, vanaf 1,20 veenbrokken	Moernering
1,65	-2,59	veen, donkerbruin, matig amorf, riet, onderin bruin met veel riet	Hollandveen Laagpakket
2,00	-2,94	klei, zwak siltig, slap, lichtblauwgrijs, riet	Laagpakket van Wormer

BORING	**37.B06**	X	50.670
		Y	388.582
BESCHRIJVER	F. D'hondt	Z	-1,06

meter - mv	meter tov NAP	Beschrijving	Lithostratigrafie
0,85	-1,91	klei en veen, sterk humeus	Opgebracht
1,10	-2,16	klei, zwak siltig, stevig, grijs, spoor roestvlekken, donkergrijs gevlekt, gruis schelpmateriaal	Moernering
1,85	-2,91	klei, zwak siltig, matig stevig, blauwgrijs, heterogeen, veenbrokken	Moernering
1,90	-2,96	veen, bruin, zwak amorf, riet	Hollandveen Laagpakket
2,30	-3,36	klei, zwak siltig, slap, lichtblauwgrijs, riet	Laagpakket van Wormer

BORING	**37.B07**	X	50.685
		Y	388.596
BESCHRIJVER	F. D'hondt	Z	-1,13

meter - mv	meter tov NAP	Beschrijving	Lithostratigrafie
0,75	-1,88	klei en veen, sterk humeus	Opgebracht
1,10	-2,23	klei, zwak siltig, stevig, grijs, spoor roestvlekken, lichtgrijs gevlekt	Moernering
1,85	-2,98	klei, zwak siltig, matig stevig, blauwgrijs, heterogeen, veenbrokken	Moernering
1,90	-3,03	veen, bruin, zwak amorf, riet	Hollandveen Laagpakket
2,20	-3,33	klei, zwak siltig, slap, lichtblauwgrijs, riet	Laagpakket van Wormer

Mastvoetlocatie 1038

BORING	**38.B03**	X	50.929
		Y	388.382
BESCHRIJVER	F. D'hondt	Z	-0,95

meter - mv	meter tov NAP	Beschrijving	Lithostratigrafie
0,40	-1,35	klei, zwak siltig, matig stevig, bruingrijs, heterogeen	Bouwvoor
1,20	-2,15	klei, zwak siltig, stevig, grijs, enkele roestvlekken, donkergrijs gevlekt	Moernering
1,80	-2,75	klei, zwak siltig, matig stevig, blauwgrijs, veenbrokken, heterogeen	Moernering
1,83	-2,78	veen, bruin, zwak amorf, riet	Hollandveen Laagpakket
2,50	-3,45	klei, zwak siltig, slap, lichtgrijs, naar onder toe zandlaagjes	Laagpakket van Wormer

BORING	**38.B04**	X	50.943
		Y	388.393
BESCHRIJVER	J. Wattenberghe	Z	-0,96

meter - mv	meter tov NAP	Beschrijving	Lithostratigrafie
0,40	-1,36	klei, zwak siltig, matig stevig, bruingrijs, heterogeen	Bouwvoor
0,50	-1,46	klei, zwak siltig, matig stevig, donkerbruingrijs, veenbrokken	Opgebracht
1,30	-2,26	klei, zwak siltig, matig stevig, grijs, enkele roestvlekken, onderin veenbrokken	Moernering
1,95	-2,91	klei, zwak siltig, matig slap, blauwgrijs, veenbrokken, heterogeen	Moernering
2,05	-3,01	veen, donkerbruin, zwak amorf, riet	Hollandveen Laagpakket
2,50	-3,46	klei, zwak siltig, slap, lichtgrijs, zandlaagjes	Laagpakket van Wormer

BORING	**38.B06**	X	50.942
		Y	388.374
BESCHRIJVER	F. D'hondt	Z	-0,97

meter - mv	meter tov NAP	Beschrijving	Lithostratigrafie
0,35	-1,32	klei, zwak siltig, matig stevig, bruingrijs, heterogeen	Bouwvoor
0,50	-1,47	klei, zwak siltig, matig stevig, grijs, heterogeen, gemengd met as	Opgebracht
1,00	-1,97	klei, zwak siltig, stevig, grijs, enkele roestvlekken	Laagpakket van Walcheren
1,25	-2,22	veen, zwart, sterk amorf, sterk veraard	Hollandveen Laagpakket: intact
1,55	-2,52	veen, donkerbruin, sterk amorf	Hollandveen Laagpakket
1,65	-2,62	klei, zwak siltig, slap, lichtblauwgrijs: klapklei	Laagpakket van Walcheren
1,75	-2,72	veen, bruin, zwak amorf, riet	Hollandveen Laagpakket
2,00	-2,97	klei, matig siltig, lichtblauwgrijs, riet	Laagpakket van Wormer

BORING	**38.B07**	X	50.928
		Y	388.363
BESCHRIJVER	F. D'hondt	Z	-0,98

meter - mv	meter tov NAP	Beschrijving	Lithostratigrafie
0,30	-1,28	klei, zwak siltig, matig stevig, bruingrijs, heterogeen	Bouwvoor
0,85	-1,83	klei, zwak siltig, stevig, grijs, enkele roestvlekken	Laagpakket van Walcheren
1,25	-2,23	klei, zwak siltig, stevig, donkergrijsbruin, enkele roest-vlekken, veenbrokjes	Laagpakket van Walcheren
1,30	-2,28	veen, zwart, sterk amorf, geoxideerd	Hollandveen Laagpakket: intact
2,00	-2,98	veen, donkerroodbruin, matig amorf	Hollandveen Laagpakket
2,05	-3,03	veen, bruin, zwak amorf, riet	Hollandveen Laagpakket
2,50	-3,48	klei, matig siltig, slap, lichtgrijs, riet	Laagpakket van Wormer

Mastvoetlocatie 1039

BORING	**39.B03**		
		X	51.207
		Y	388.167
BESCHRIJVER	F. D'hondt	Z	-0,63

meter - mv	meter tov NAP	Beschrijving	Lithostratigrafie
0,30	-0,93	klei, zwak zandig, stevig, donkerbruingrijs, zwak humeus, heterogeen	Bouwvoor
1,50	-2,13	klei, zwak siltig, matig stevig, blauwgrijs, veenbrokken, heterogeen	Moernering
2,45	-3,08	klei, zwak siltig, matig stevig, blauwgrijs, veenbrokken, heterogeen	Moernering
2,55	-3,18	veen, bruin, zwak amorf, riet, gelaagde opbouw	Hollandveen Laagpakket
3,00	-3,63	klei, zwak siltig, slap, lichtblauwgrijs, riet	Laagpakket van Wormer

BORING	**39.B04**	X	51.197
		Y	388.153
BESCHRIJVER	F. D'hondt	Z	-0,51

meter - mv	meter tov NAP	Beschrijving	Lithostratigrafie
0,30	-0,81	klei, zwak zandig, stevig, donkerbruingrijs, zwak humeus, heterogeen	Bouwvoor
1,00	-1,51	klei, zwak siltig, stevig, grijs, spoor roestvlekken, onderin veenbrokken	Laagpakket van Walcheren
1,30	-1,81	veen, zwart, matig amorf, geoxideerd	Hollandveen Laagpakket: intact
2,00	-2,51	veen, roodbruin, matig amorf, hout	Hollandveen Laagpakket
2,25	-2,76	veen, bruin, zwak amorf, riet	Hollandveen Laagpakket
2,6	-3,11	klei, zwak siltig, slap, lichtblauwgrijs, riet	Laagpakket van Wormer

BORING	**39.B06**	X	51.193
		Y	388.172
BESCHRIJVER	F. D'hondt	Z	-0,55

meter - mv	meter tov NAP	Beschrijving	Lithostratigrafie
0,30	-0,85	klei, zwak zandig, stevig, donkerbruingrijs, zwak humeus, heterogeen	Bouwvoor
1,00	-1,55	klei, zwak siltig, stevig, grijs, spoor roestvlekken	Laagpakket van Walcheren
1,25	-1,80	klei, zwak siltig, matig stevig, donkergrijs, venig, enkele roestvlekken	Laagpakket van Walcheren
1,45	-2,00	veen, zwart, matig amorf, sterk veraard	Hollandveen Laagpakket: intact
1,85	-2,40	veen, donkerbruin, matig amorf	Hollandveen Laagpakket
2,10	-2,65	veen, donkerbruin, zwak amorf, riet, onderin gelaagd	Hollandveen Laagpakket
2,50	-3,05	klei, zwak siltig, slap, lichtblauwgrijs, riet	Laagpakket van Wormer

BORING	**39.B07**	X	51.202
		Y	388.186
BESCHRIJVER	F. D'hondt	Z	-0,58

meter - mv	meter tov NAP	Beschrijving	Lithostratigrafie
0,35	-0,93	klei, zwak zandig, stevig, donkerbruingrijs, zwak humeus, heterogeen	Bouwvoor
1,05	-1,63	klei, zwak siltig, stevig, grijs, spoor roestvlekken	Laagpakket van Walcheren
1,20	-1,78	klei, zwak siltig, matig stevig, donkergrijs, zwak venig	Laagpakket van Walcheren
1,55	-2,13	klei, zwak siltig, matig stevig, donkergrijs, gelaagde op-bouw, met dunne zwarte veenlaagjes	Laagpakket van Walcheren
2,35	-2,93	veen, donkerbruin, matig amorf, hout, mos	Hollandveen Laagpakket: geërodeerd
2,65	-3,23	veen, bruin, zwak amorf, riet, onderin gelaagd	Hollandveen Laagpakket
3,00	-3,58	klei, zwak siltig, slap, lichtblauwgrijs, riet	Laagpakket van Wormer

Mastvoetlocatie 1039A

BORING	**39A.B03**	X	51.443
		Y	387.965
BESCHRIJVER	F. D'hondt	Z	-0,06

meter - mv	meter tov NAP	Beschrijving	Lithostratigrafie
0,30	-0,36	klei, zwak siltig, matig stevig, grijsbruin, compleet schelpmateriaal	Bouwvoor
0,60	-0,66	klei, zwak siltig, matig stevig, grijs, enkele roestvlekken	Laagpakket van Walcheren
1,45	-1,51	klei, zwak zandig, matig stevig, grijs, spoor roestvlekken, zandlaagjes	Laagpakket van Walcheren
1,70	-1,76	klei, zwak zandig, matig slap, donkergrijs, zandlaagjes	Laagpakket van Walcheren
1,90	-1,96	veen, zwart, matig amorf, geoxideerd	Hollandveen Laagpakket: intact
2,30	-2,36	veen, bruin, zwak amorf, riet	Hollandveen Laagpakket
3,00	-3,06	klei, matig siltig, slap, lichtblauw-grijs, riet	Laagpakket van Wormer

BORING	**39A.B04**	X	51.453
		Y	387.979
BESCHRIJVER	F. D'hondt	Z	-0,19

meter - mv	meter tov NAP	Beschrijving	Lithostratigrafie
0,30	-0,49	klei, zwak siltig, matig stevig, grijsbruin	Bouwvoor
0,60	-0,79	klei, zwak siltig, matig stevig, grijs, enkele roestvlekken, gruis schelpmateriaal	Laagpakket van Walcheren
1,50	-1,69	klei, zwak zandig, matig stevig, grijs, enkele roestvlek-ken, gruis schelpmateriaal, zandlaagjes, vanaf 1,20 zwarte organische restjes	Laagpakket van Walcheren
1,85	-2,04	klei, zwak zandig, matig slap, donkergrijs, zandlaagjes	Laagpakket van Walcheren
2,40	-2,59	veen, donkerbruin, matig amorf, vanaf 2,15 riet	Hollandveen Laagpakket: geërodeerd
3,00	-3,19	klei, zwak zandig, lichtblauwgrijs, slap, riet	Laagpakket van Wormer

BORING	**39A.B06**	X	51.457
		Y	387.960
BESCHRIJVER	F. D'hondt	Z	-0,14

meter - mv	meter tov NAP	Beschrijving	Lithostratigrafie
0,30	-0,44	klei, zwak siltig, matig stevig, grijsbruin	Bouwvoor
0,65	-0,79	klei, zwak siltig, matig stevig, grijs, enkele roestvlekken, gruis schelpmateriaal	Laagpakket van Walcheren
1,45	-1,59	klei, zwak zandig, matig stevig, grijs, enkele roestvlek-ken, gruis schelpmateriaal, zandlaagjes	Laagpakket van Walcheren
2,05	-2,19	klei, zwak zandig, matig slap, donkergrijs, zandlaagjes, veengruislaagjes	Laagpakket van Walcheren
2,55	-2,69	veen, bruin, matig amorf, vanaf 2,30 zwak amorf, riet	Hollandveen Laagpakket: geërodeerd
3,00	-3,14	klei, matig siltig, lichtblauwgrijs, slap, riet	Laagpakket van Wormer

BORING	**39A.B07**	X	51.446
		Y	387.946
BESCHRIJVER	F. D'hondt	Z	-0,14

meter - mv	meter tov NAP	Beschrijving	Lithostratigrafie
0,30	-0,44	klei, zwak siltig, matig stevig, grijsbruin	Bouwvoor
1,00	-1,14	klei, zwak siltig, matig stevig, grijs, enkele roestvlekken	Laagpakket van Walcheren
1,40	-1,54	klei, zwak zandig, matig stevig, grijs, enkele roestvlekken, zandlaagjes	Laagpakket van Walcheren
2,10	-2,24	klei, zwak zandig, matig slap, donkergrijs, zandlaagjes, veengruislaagjes	Laagpakket van Walcheren
2,50	-2,64	veen, bruin, matig amorf	Hollandveen Laagpakket: geërodeerd
3,00	-3,14	klei, matig siltig, lichtblauwgrijs, slap, riet	Laagpakket van Wormer

Mastvoetlocatie 1040

BORING	**40.B03**	X	51.691
		Y	387.926
BESCHRIJVER	F. D'hondt	Z	-0,22

meter - mv	meter tov NAP	Beschrijving	Lithostratigrafie
0,30	-0,52	zand, kleiig, matig fijn, donkergrijs, zwak humeus	Bouwvoor
0,80	-1,02	zand, zwak siltig, matig fijn, grijs, heterogeen, kleibrokken, gruis schelpmateriaal	Vergraven
1,20	-1,42	zand, zwak siltig, matig fijn, lichtgrijs, enkele roestvlekken, fragmenten schelpmateriaal	Laagpakket van Walcheren: geul
1,50	-1,72	klei, matig zandig, matig slap, lichtgrijs, spoor roestvlekken, gruis schelpmateriaal, zandlaagjes	Laagpakket van Walcheren: geul
2,20	-2,42	zand, zwak siltig, matig fijn, grijs, gelamineerde opbouw van klei- en zandlaagjes	Laagpakket van Walcheren: geul
2,70	-2,92	zand, zwak siltig, matig fijn, blauwgrijs, kleilaminatie, veengruislaagjes	Laagpakket van Walcheren: geul

BORING	**40.B04**	X	51.699
		Y	387.940
BESCHRIJVER	F. D'hondt	Z	-0,20

meter - mv	meter tov NAP	Beschrijving	Lithostratigrafie
0,30	-0,50	Klei, zwak zandig, matig stevig, donkerbruingrijs, heterogeen, fragmenten schelpmateriaal	Bouwvoor
0,75	-0,95	klei, matig zandig, matig stevig, donkergrijs, heterogeen	Vergraven
1,00	-1,20	zand, zwak siltig, matig fijn, lichtgrijs, spoor roestvlekken	Laagpakket van Walcheren: geul
1,50	-1,70	klei, zwak siltig, matig slap, grijs, spoor roestvlekken, zandlaagjes	Laagpakket van Walcheren: geul
3,10	-3,30	zand, kleiig, matig fijn, blauwgrijs, kleilaagjes, gaat over naar zwak siltig zand met minder kleilaagjes en meer veengruislaagjes	Laagpakket van Walcheren: geul
3,30	-3,50	zand, zwak siltig, matig fijn, blauwgrijs, fragmenten schelpmateriaal	Laagpakket van Walcheren: geul

BORING	**40.B06**	X	51.707

		Y	387.921
BESCHRIJVER	F. D'hondt	Z	-0,29

meter - mv	meter tov NAP	Beschrijving	Lithostratigrafie
0,85	-1,14	zand, kleiig, matig fijn, donkergrijs, heterogeen, fragmenten schelpmateriaal	Bouwvoor
1,50	-1,79	zand, kleiig, matig fijn, lichtgrijs, fragmenten schelpmateriaal	Laagpakket van Walcheren: geul
2,50	-2,79	zand, kleiig, matig fijn, blauwgrijs, gruis schelpmateriaal, vanaf 1,90 zwak siltig zand	Laagpakket van Walcheren: geul

BORING	**40.B07**	X	51.698
		Y	387.905
BESCHRIJVER	F. D'hondt	Z	-0,18

meter - mv	meter tov NAP	Beschrijving	Lithostratigrafie
0,10	-0,28	zand, kleiig, matig fijn, donkerbruingrijs	Bouwvoor
1,30	-1,48	zand, zwak siltig, matig fijn, grijs, kleibrokken	Vergraven
1,50	-1,68	klei, zwak siltig, matig stevig, lichtgrijs, enkele roestvlekken, gruis schelpmateriaal	Laagpakket van Walcheren
3,70	-3,88	klei, zwak siltig, slap, blauwgrijs, met zandlaagjes, gruis schelpmateriaal	Laagpakket van Walcheren
4,00	-4,18	zand, zwak siltig, matig fijn, blauwgrijs, gruis schelpmateriaal	Laagpakket van Walcheren: geul

Mastvoetlocatie 1041

BORING	**41.B02**	X	52.090
		Y	387.876
BESCHRIJVER	F. D'hondt	Z	0,90

meter - mv	meter tov NAP	Beschrijving	Lithostratigrafie
0,30	0,60	klei, matig zandig, matig stevig, donkerbruin	Bouwvoor
0,80	0,10	klei, sterk zandig, matig stevig, grijsbruin, enkele roestvlekken	Laagpakket van Walcheren: geul
1,60	-0,70	zand, matig siltig, matig fijn, grijs, enkele roestvlekken, fragmenten schelpmateriaal	Laagpakket van Walcheren: geul
2,00	-1,10	zand, matig siltig, matig fijn, grijs, enkele roestvlekken, veel lemige laagjes	Laagpakket van Walcheren: geul
2,50	-1,60	zand, matig siltig, matig fijn, blauwgrijs, gruis schelpmateriaal, veel lemige laagjes	Laagpakket van Walcheren: geul

BORING	**41.B03**	X	52.074
		Y	387.860
BESCHRIJVER	F. D'hondt	Z	0,89

meter - mv	meter tov NAP	Beschrijving	Lithostratigrafie
0,35	0,54	klei, matig zandig, matig stevig, donkerbruin, spoor puin-spikkels	Bouwvoor
0,75	0,14	klei, sterk zandig, matig stevig, grijsbruin, enkele roest-vlekken	Laagpakket van Walcheren: geul
1,50	-0,61	zand, matig siltig, matig fijn, lichtbruingrijs, enkele roest-vlekken, fragmenten schelpmateriaal	Laagpakket van Walcheren: geul

BORING	**41.B04**	X	52.086
		Y	387.859
BESCHRIJVER	F. D'hondt	Z	0,84

meter - mv	meter tov NAP	Beschrijving	Lithostratigrafie
0,40	0,44	klei, matig zandig, matig stevig, donkerbruin	Bouwvoor
0,70	0,14	klei, sterk zandig, matig stevig, grijsbruin, enkele roest-vlekken	Laagpakket van Walcheren: geul
1,75	-0,91	zand, matig siltig, matig fijn, lichtbruingrijs, enkele roest-vlekken, lemige laagjes, fragmenten schelpmateriaal	Laagpakket van Walcheren: geul

BORING	**41.B05**	X	52.071
		Y	387.843
BESCHRIJVER	F. D'hondt	Z	0,78

meter - mv	meter tov NAP	Beschrijving	Lithostratigrafie
0,30	0,48	klei, matig zandig, matig stevig, donkerbruin	Bouwvoor
0,70	0,08	klei, sterk zandig, matig stevig, grijsbruin, enkele roest-vlekken	Boomgaard
1,20	-0,42	zand, matig siltig, matig fijn, lichtbruingrijs, enkele roest-vlekken	Laagpakket van Walcheren: geul
1,50	-0,72	Zand, zwak siltig, matig fijn, lichtgrijs, enkele roestvlek-ken, weinig lemige laagjes	Laagpakket van Walcheren: geul

Mastvoetlocatie 1042

BORING	**42.B03**	X	52.453
		Y	387.799
BESCHRIJVER	F. D'hondt	Z	0,16

meter - mv	meter tov NAP	Beschrijving	Lithostratigrafie
0,30	-0,14	klei, zwak siltig, matig stevig, grijsbruin, compleet schelpmateriaal, heterogeen	Bouwvoor
0,70	-0,54	klei, zwak siltig, matig stevig, grijs, enkele roestvlekken	Laagpakket van Walcheren
1,20	-1,04	zand, zwak siltig, matig fijn, grijs, enkele roestvlekken, gruis schelpmateriaal	Laagpakket van Walcheren
1,80	-1,64	klei, matig zandig, matig stevig, grijs, spoor roestvlekken, zandlaagjes	Laagpakket van Walcheren
2,40	-2,24	klei, zwak siltig, stevig, donkergrijs, bovenin spoor roestvlekken, gruis schelpmateriaal	Laagpakket van Walcheren
2,85	-2,69	klei, zwak siltig, stevig, donkerbruingrijs, veengruis	Laagpakket van Walcheren
3,80	-3,64	veen, donkerbruin, matig amorf	Hollandveen Laagpakket: geërodeerd
4,00	-3,84	klei, zwak siltig, slap, lichtblauwgrijs, riet	Laagpakket van Wormer

BORING	**42.B04**	X	52.460
		Y	387.813
BESCHRIJVER	F. D'hondt	Z	0,03

meter - mv	meter tov NAP	Beschrijving	Lithostratigrafie
0,30	-0,27	klei, zwak siltig, matig stevig, grijsbruin, heterogeen	Bouwvoor
1,10	-1,07	klei, matig zandig, matig stevig, grijs, enkele roestvlekken	Laagpakket van Walcheren
1,40	-1,37	klei, zwak siltig, matig stevig, grijs, enkele roestvlekken, zandlaagjes	Laagpakket van Walcheren
1,95	-1,92	klei, zwak siltig, matig stevig, donkergrijs, veengruis, spoor roestvlekken	Laagpakket van Walcheren: geul
2,25	-2,22	klei, zwak siltig, matig stevig, bruingrijs, venig	Laagpakket van Walcheren: geul
3,45	-3,42	veen, donkerbruin, matig amorf, vanaf 3,00 riet	Hollandveen Laagpakket: geërodeerd
4,00	-3,97	klei, zwak siltig, slap, lichtblauwgrijs, riet	Laagpakket van Wormer

BORING	**42.B06**	X	52.466
		Y	387.795
BESCHRIJVER	F. D'hondt	Z	0,14

meter - mv	meter tov NAP	Beschrijving	Lithostratigrafie
0,30	-0,16	klei, zwak siltig, matig stevig, grijsbruin, heterogeen	Bouwvoor
0,70	-0,56	klei, zwak siltig, matig stevig, bruingrijs, enkele roest-vlekken	Laagpakket van Walcheren
1,80	-1,66	klei, matig zandig, matig stevig, grijs, enkele roestvlek-ken, fragmenten schelpmateriaal	Laagpakket van Walcheren
2,60	-2,46	klei, zwak siltig, stevig, blauwgrijs, fijne zandlaagjes	Laagpakket van Walcheren
2,75	-2,61	klei, zwak siltig, stevig, grijsbruin, veengruis	Laagpakket van Walcheren
3,95	-3,81	veen, donkerbruin, matig amorf	Hollandveen Laagpakket: geërodeerd
4,00	-3,86	klei, zwak siltig, slap, lichtblauwgrijs, riet	Laagpakket van Wormer

BORING	**42.B07**	X	52.461
		Y	387.780
BESCHRIJVER	F. D'hondt	Z	-0,06

meter - mv	meter tov NAP	Beschrijving	Lithostratigrafie
0,30	-0,36	klei, zwak siltig, matig stevig, grijsbruin, heterogeen	Bouwvoor
1,80	-1,86	klei, matig siltig, matig stevig, donkergrijs, heterogeen, compleet schelpmateriaal	Vergraven
1,90	-1,96	klei, zwak siltig, matig stevig, bruingrijs, veengruis	Laagpakket van Walcheren
2,05	-2,11	veen, zwart, matig amorf	Hollandveen Laagpakket: intact
2,95	-3,01	veen, donkerbruin, matig amorf, vanaf 2,55 riet	Hollandveen Laagpakket
3,50	-3,56	klei, matig siltig, slap, lichtblauwgrijs, riet	Laagpakket van Wormer

Mastvoetlocatie 1043

BORING	**43.B03**	X	52.833
		Y	387.735
BESCHRIJVER	F. D'hondt	Z	-0,42

meter - mv	meter tov NAP	Beschrijving	Lithostratigrafie
0,50	-0,92	klei, zwak zandig, matig stevig, donkerbruingrijs	Bouwvoor
1,55	-1,97	zand, zwak siltig, matig fijn, lichtgrijs, spoor roestvlekken	Laagpakket van Walcheren
1,90	-2,32	zand, zwak siltig, matig fijn, blauwgrijs, gruis schelpmate-riaal	Laagpakket van Walcheren
2,40	-2,82	klei, zwak siltig, slap, donkergrijs, onderin fragmenten schelpmateriaal	Laagpakket van Walcheren
3,50	-3,92	veen, donkerbruin, matig amorf	Hollandveen Laagpakket
4,00	-4,42	klei, matig siltig, slap, blauwgrijs, riet	Laagpakket van Wormer

BORING	**43.B04**	X	52.840
		Y	387.751
BESCHRIJVER	F. D'hondt	Z	-0,30

meter - mv	meter tov NAP	Beschrijving	Lithostratigrafie
0,30	-0,60	klei, zwak zandig, matig stevig, donkerbruingrijs	Bouwvoor
1,45	-1,75	zand, zwak siltig, matig fijn, lichtgrijs, enkele roestvlekken, gruis schelpmateriaal	Laagpakket van Walcheren
1,80	-2,10	zand, zwak siltig, matig fijn, blauwgrijs, gruis schelpmateriaal	Laagpakket van Walcheren
2,65	-2,95	klei, matig siltig, slap, donkergrijs	Laagpakket van Walcheren
3,65	-3,95	veen, donkerbruin, matig amorf	Hollandveen Laagpakket: geërodeerd
4,00	-4,3	klei, matig siltig, slap, lichtblauwgrijs, riet	Laagpakket van Wormer

BORING	**43.B06**	X	52.849
		Y	387.734
BESCHRIJVER	F. D'hondt	Z	-0,36

meter - mv	meter tov NAP	Beschrijving	Lithostratigrafie
0,30	-0,66	klei, zwak zandig, matig stevig, donkerbruingrijs	Bouwvoor
1,00	-1,36	zand, zwak siltig, matig fijn, lichtgrijs, enkele roestvlekken	Laagpakket van Walcheren
1,40	-1,76	zand, zwak siltig, matig fijn, grijs, organische restjes	Laagpakket van Walcheren
2,20	-2,56	zand, zwak siltig, matig fijn, blauwgrijs, gruis schelpmateriaal, onderin compleet schelpmateriaal	Laagpakket van Walcheren
2,95	-3,31	klei, zwak siltig, slap, donkergrijs	Laagpakket van Walcheren
3,60	-3,96	veen, donkerbruin, matig amorf, vanaf 3,35 riet	Hollandveen Laagpakket
3,80	-4,16	klei, zwak siltig, slap, donkergrijs, fragmenten schelpmateriaal: klapklei	Laagpakket van Walcheren
4,00	-4,36	klei, matig siltig, slap, lichtblauwgrijs, riet	Laagpakket van Wormer

BORING	**43.B07**	X	52.842
		Y	387.717
BESCHRIJVER	F. D'hondt	Z	-0,41

meter - mv	meter tov NAP	Beschrijving	Lithostratigrafie
0,30	-0,71	klei, matig zandig, matig stevig, donkerbruingrijs	Bouwvoor
1,50	-1,91	zand, matig siltig, matig fijn, lichtgrijs, enkele roestvlekken, vanaf 1,50 geen materiaal meer naar boven te halen	Laagpakket van Walcheren

Mastvoetlocatie 1044

BORING	**44.B03**	X	53.184
		Y	387.678
BESCHRIJVER	F. D'hondt	Z	-0,93

meter - mv	meter tov NAP	Beschrijving	Lithostratigrafie
0,30	-1,23	klei, zwak siltig, matig stevig, donkerbruingrijs	Bouwvoor
0,85	-1,78	klei, zwak siltig, matig stevig, grijs, enkele roestvlekken, bovenin zwak zandig	Laagpakket van Walcheren
1,40	-2,33	veen, zwart, sterk amorf, geoxideerd, sterk veraard	Hollandveen Laagpakket: intact
1,60	-2,53	veen, donkerbruin, matig amorf	Hollandveen Laagpakket
1,85	-2,78	veen, bruin, zwak amorf, riet	Hollandveen Laagpakket
2,30	-3,23	klei, matig zandig, slap, lichtblauwgrijs, riet	Laagpakket van Wormer

BORING	**44.B04**	X	53.191
		Y	387.694
BESCHRIJVER	F. D'hondt	Z	-0,74

meter - mv	meter tov NAP	Beschrijving	Lithostratigrafie
0,30	-1,04	klei, zwak siltig, matig stevig, donkerbruingrijs	Bouwvoor
0,90	-1,64	klei, zwak zandig matig stevig, grijs, enkele roestvlekken	Laagpakket van Walcheren
1,40	-2,14	veen, zwart, sterk amorf, geoxideerd, sterk veraard	Hollandveen Laagpakket: intact
1,75	-2,49	veen, donkerbruin, matig amorf	Hollandveen Laagpakket
2,20	-2,94	veen, bruin, zwak amorf, riet	Hollandveen Laagpakket
2,50	-3,240	klei, matig zandig, slap, lichtblauwgrijs, riet	Laagpakket van Wormer

BORING	**44.B06**	X	53.199
		Y	387.676
BESCHRIJVER	F. D'hondt	Z	-1,05

meter - mv	meter tov NAP	Beschrijving	Lithostratigrafie
0,30	-1,35	klei, zwak siltig, matig stevig, donkerbruingrijs	Bouwvoor
1,80	-2,85	klei, zwak siltig, matig stevig, blauwgrijs, veenbrokken, heterogeen	Moernering
1,85	-2,90	veen, bruin, zwak amorf, riet	Hollandveen Laagpakket
2,00	-3,05	klei, matig zandig, slap, lichtblauwgrijs, riet	Laagpakket van Wormer

BORING	**44.B07**	X	53.192
		Y	387.662
BESCHRIJVER	F. D'hondt	Z	-0,92

meter - mv	meter tov NAP	Beschrijving	Lithostratigrafie
0,30	-1,22	klei, zwak siltig, matig stevig, donkerbruingrijs	Bouwvoor
1,20	-2,12	klei, zwak siltig, matig stevig, grijs, heterogeen, veen-brokken	Moernering
1,40	-2,32	veen, zwart, sterk amorf, geoxideerd, sterk veraard	Hollandveen Laagpakket: intact
1,60	-2,52	veen, bruin, zwak amorf, riet	Hollandveen Laagpakket
2,00	-2,92	klei, zwak zandig, slap, lichtblauwgrijs, riet	Laagpakket van Walcheren

Mastvoetlocatie 1045

BORING	**45.B02**	X	53.594
		Y	387.628
BESCHRIJVER	F. D'hondt	Z	-0,53

meter - mv	meter tov NAP	Beschrijving	Lithostratigrafie
0,60	-1,13	Klei, zwak siltig, matig stevig, donkerbruingrijs, matig humeus, veenbrokken, spoor van baksteenspikkels, heterogeen	Bouwvoor
1,70	-2,23	Klei, zwak siltig, matig stevig, grijs, enkele roestvlekken	Laagpakket van Walcheren / Moerne-ring
2,00	-2,53	Klei, zwak zandig, matig slap, blauwgrijs, veenbrokken	Moernering
2,10	-2,63	Veen, matig amorf, donkerbruin, riet	Hollandveen Laagpakket
2,85	-3,38	Klei, zwak zandig, slap, lichtblauwgrijs, riet, zandlagen, vanaf 2.60 klei, matig zandig	Laagpakket van Wormer

BORING	**45.B03**	X	53.591
		Y	387.611
BESCHRIJVER	F. D'hondt	Z	-0,48

meter - mv	meter tov NAP	Beschrijving	Lithostratigrafie
0,25	-0,73	Klei, zwak siltig, matig stevig, donkerbruin, zwak hu-meus, heterogeen	Bouwvoor
0,95	-1,43	Klei, zwak siltig, matig slap, donkerbruingrijs, zwak hu-meus, heterogeen, veenbrokken	Vergraven
1,95	-2,43	Klei, zwak siltig, matig slap, blauwgrijs, veenbrokken	Moernering
2,10	-2,58	Veen, zwak amorf, bruin, riet	Hollandveen Laagpakket
2,30	-2,78	Klei, zwak siltig, slap, lichtgrijs, riet	Laagpakket van Wormer
2,75	-3,23	Klei, matig zandig, slap, lichtgrijs, riet, zandlaagjes	Laagpakket van Wormer

BORING	**45.B04**	X	53.580
		Y	387.613
BESCHRIJVER	F. D'hondt	Z	-0,57

meter - mv	meter tov NAP	Beschrijving	Lithostratigrafie
0,25	-0,82	Klei, zwak siltig, matig stevig, donkerbruin, zwak humeus, heterogeen	Bouwvoor
0,95	-1,52	Klei, zwak siltig, matig stevig, donkergrijs, zwak humeus, heterogeen, veenbrokken	Vergraven
2,20	-2,77	Klei, zwak siltig, slap, lichtgrijs, heterogeen	Moernering
2,23	-2,80	Veen, zwak amorf, donkerbruin, riet	Hollandveen Laagpakket
2,35	-2,92	Klei, zwak siltig, slap, lichtgrijs, riet	Laagpakket van Wormer
2,90	-3,47	Klei, zwak zandig, slap, lichtgrijs, zandlaagjes	Laagpakket van Wormer

BORING	**45.B05**	X	53.580
		Y	387.596
BESCHRIJVER	F. D'hondt	Z	-0,51

meter - mv	meter tov NAP	Beschrijving	Lithostratigrafie
0,35	-0,86	Klei, zwak siltig, matig stevig, donkerbruin, zwak humeus, heterogeen	Bouwvoor
1,25	-1,76	Klei, zwak siltig, stevig, bruingrijs, heterogeen, enkele roestvlekken	Moernering
1,85	-2,36	Klei, zwak siltig, matig slap, blauwgrijs, veenbrokken	Moernering
2,05	-2,56	Veen, zwak amorf, bruin, riet	Hollandveen Laagpakket
2,90	-3,41	Klei, zwak zandig, matig slap, grijs, riet, naar onder zandlaagjes	Laagpakket van Wormer

Mastvoetlocatie 1047

BORING	**47.B03**	X	54.257
		Y	387.502
BESCHRIJVER	F. D'hondt	Z	-0,59

meter - mv	meter tov NAP	Beschrijving	Lithostratigrafie
0,30	-0,89	Klei, zwak siltig, matig stevig, bruingrijs	Bouwvoor
0,55	-1,14	Klei, zwak siltig, matig stevig, grijs, enkele roestvlekken	Laagpakket van Walcheren
1,60	-2,19	Klei, zwak zandig, matig stevig, lichtgrijs, enkele roestvlekken, heterogeen	Moernering
2,05	-2,64	Klei, zwak siltig, matig stevig, blauwgrijs, bruin gevlekt, fragment schelpmateriaal, heterogeen	Moernering
2,20	-2,79	Veen, zwak amorf, bruin, riet	Hollandveen Laagpakket
2,40	-2,99	Klei, zwak siltig, slap, lichtblauwgrijs, riet	Laagpakket van Wormer
3,00	-3,59	Klei, matig zandig, slap, lichtblauwgrijs	Laagpakket van Wormer

BORING	**47.B04**	X	54.263
		Y	387.517
BESCHRIJVER	F. D'hondt	Z	-0,65

meter - mv	meter tov NAP	Beschrijving	Lithostratigrafie
0,30	-0,95	Klei, zwak siltig, matig stevig, bruingrijs	Bouwvoor
1,50	-2,15	Klei, zwak siltig, matig stevig, grijsbruin, veenbrokjes, heterogeen	Moernering
2,00	-2,65	Veen, matig amorf, bruin, onderin riet	Hollandveen Laagpakket
2,25	-2,90	Klei, zwak siltig, slap, lichtblauwgrijs, riet	Laagpakket van Wormer
3,00	-3,65	Klei, matig zandig, slap, lichtblauwgrijs, zandlagen	Laagpakket van Wormer

BORING	**47.B06**	X	54.272
		Y	387.500
BESCHRIJVER	F. D'hondt	Z	-0,52

meter - mv	meter tov NAP	Beschrijving	Lithostratigrafie
0,35	-0,87	Klei, zwak siltig, matig stevig, bruingrijs	Bouwvoor
1,20	-1,72	Klei, zwak siltig, matig stevig, grijs, enkele roestvlekken	Laagpakket van Walcheren
1,40	-1,92	Klei, zwak siltig, matig stevig, grijsbruin, spoor van roest-vlekken, veenrestjes	Laagpakket van Walcheren
1,55	-2,07	Veen, matig amorf, zwart, geoxideerd	Hollandveen Laagpakket
2,05	-2,57	Veen, matig amorf, donkerbruin	Hollandveen Laagpakket
2,30	-2,82	Veen, zwak amorf, bruin, riet	Hollandveen Laagpakket
3,00	-3,52	Klei, zwak siltig, slap, lichtblauwgrijs, riet, vanaf 2.60 klei, zwak zandig	Laagpakket van Wormer

BORING	**47.B07**	X	54.266
		Y	387.484
BESCHRIJVER	F. D'hondt	Z	-0,55

meter - mv	meter tov NAP	Beschrijving	Lithostratigrafie
0,30	-0,85	Klei, zwak siltig, matig stevig, bruingrijs	Bouwvoor
0,70	-1,25	Zand, zwak siltig, matig fijn, lichtgrijs, spoor van roest-vlekken	Laagpakket van Walcheren
0,95	-1,50	Klei, matig zandig, matig slap, grijs, enkele roestvlekken, fragment schelpmateriaal, zandlaagjes	Laagpakket van Walcheren
1,20	-1,75	Klei, zwak zandig, matig stevig, donkerbruingrijs, venig, onderin veenbrokjes	Laagpakket van Walcheren
1,25	-1,80	Veen, matig amorf, donkerbruin, zwarte vlekken	Hollandveen Laagpakket
1,95	-2,50	Veen, matig amorf, donkerbruin - roodbruin	Hollandveen Laagpakket
2,05	-2,60	Veen, zwak amorf, bruin, riet	Hollandveen Laagpakket
2,35	-2,90	Klei, zwak siltig, slap, lichtblauwgrijs, riet	Laagpakket van Wormer
3,00	-3,55	Klei, matig zandig, slap, lichtblauwgrijs, zandlagen	Laagpakket van Wormer

Mastvoetlocatie 1048

BORING	**48.B03**	X	54.550
		Y	387.454
BESCHRIJVER	F. D'hondt	Z	-0,50

meter - mv	meter tov NAP	Beschrijving	Lithostratigrafie
0,30	-0,80	Klei, zwak zandig, matig stevig, grijsbruin	Bouwvoor
0,85	-1,35	Klei, zwak siltig, matig stevig, bruingrijs, heterogeen	Vergraven
1,75	-2,25	Klei, zwak siltig, matig stevig, blauwgrijs, heterogeen, veenbrokken	Moernering
2,20	-2,70	Veen, zwak amorf, bruin, riet	Hollandveen Laagpakket
2,45	-2,95	Klei, zwak siltig, slap, lichtblauwgrijs, riet	Laagpakket van Wormer
2,75	-3,25	Klei, matig zandig, slap, lichtblauwgrijs, zandlaagjes	Laagpakket van Wormer

BORING	**48.B04**	X	54.558
		Y	387.470
BESCHRIJVER	F. D'hondt	Z	-0,33

meter - mv	meter tov NAP	Beschrijving	Lithostratigrafie
0,30	-0,63	Klei, zwak zandig, matig stevig, grijsbruin	Bouwvoor
0,50	-0,83	Klei, zwak zandig, matig stevig, bruingrijs	Laagpakket van Walcheren
1,00	-1,33	Klei, matig zandig, matig stevig, lichtgrijs, enkele roest-vlekken, gruis schelpmateriaal	Laagpakket van Walcheren
1,15	-1,48	Klei, zwak siltig, matig stevig, lichtgrijsbruin, enkele roestvlekken, gruis schelpmateriaal	Laagpakket van Walcheren
1,50	-1,83	Veen, matig amorf, zwart, geoxideerd, sterk veraard	Hollandveen Laagpakket: veraard
1,90	-2,23	Veen, matig amorf, donkerbruin	Hollandveen Laagpakket: intact
2,20	-2,53	Veen, zwak amorf, bruin, riet	Hollandveen Laagpakket: intact
2,65	-2,98	Klei, zwak siltig, slap, lichtblauwgrijs, riet	Laagpakket van Wormer
3,00	-3,33	Zand, zwak siltig, matig fijn, lichtblauwgrijs	Laagpakket van Wormer

BORING	**48.B06**	X	54.566
		Y	387.453
BESCHRIJVER	F. D'hondt	Z	-0,60

meter - mv	meter tov NAP	Beschrijving	Lithostratigrafie
0,30	-0,90	Klei, zwak zandig, matig stevig, grijsbruin	Bouwvoor
0,70	-1,30	Klei, zwak siltig, matig stevig, grijs, enkele roestvlekken	Laagpakket van Walcheren
0,90	-1,50	Klei, zwak siltig, matig stevig, grijs, enkele roestvlekken, veenbrokjes	Laagpakket van Walcheren
1,30	-1,90	Veen, sterk amorf, zwart, sterk veraard, geoxideerd	Hollandveen Laagpakket: veraard
1,85	-2,45	Veen, matig amorf, donkerbruin, mos, zegge	Hollandveen Laagpakket: intact
2,05	-2,65	Veen, zwak amorf, bruin, riet	Hollandveen Laagpakket: intact
2,20	-2,80	Klei, zwak siltig, lichtblauwgrijs, slap, riet	Laagpakket van Wormer
3,00	-3,60	Zand, zwak siltig, matig fijn, lichtblauwgrijs, bovenin klei-lagen	Laagpakket van Wormer

BORING	**48.B07**	X	54.559

		Y	387.436
BESCHRIJVER	F. D'hondt	Z	-0,65

meter - mv	meter tov NAP	Beschrijving	Lithostratigrafie
0,30	-0,95	Klei, zwak zandig, matig stevig, grijsbruin	Bouwvoor
1,00	-1,65	Klei, zwak siltig, matig stevig, bruingrijs, heterogeen	Vergraven
1,80	-2,45	Klei, zwak siltig, matig stevig, blauwgrijs, heterogeen, veenbrokjes	Moernering
2,00	-2,65	Veen, zwak amorf, bruin, riet	Hollandveen Laagpakket
2,30	-2,95	Klei, zwak siltig, slap, lichtblauwgrijs, riet	Laagpakket van Wormer
3,00	-3,65	Zand, matig kleiig, matig fijn, lichtblauwgrijs	Laagpakket van Wormer

Mastvoetlocatie 1055

BORING	**55.B03**	X	56.866
		Y	387.122
BESCHRIJVER	F. D'hondt	Z	-0,75

meter - mv	meter tov NAP	Beschrijving	Lithostratigrafie
0,40	-1,15	Klei, zwak siltig, matig stevig, bruingrijs	Bouwvoor
1,95	-2,70	Klei, matig siltig, matig stevig, grijs - blauwgrijs, donker-grijs gevlekt, heterogeen, veenbrokken	Moernering
2,05	-2,80	Veen, matig amorf, donkerbruin, hout	Hollandveen Laagpakket
2,80	-3,55	Klei, matig zandig, slap, lichtblauwgrijs, bovenin riet	Laagpakket van Wormer

BORING	**55.B04**	X	56.865
		Y	387.108
BESCHRIJVER	F. D'hondt	Z	-0,74

meter - mv	meter tov NAP	Beschrijving	Lithostratigrafie
0,40	-1,14	Klei, zwak siltig, matig stevig, bruingrijs, enkele puin-brokken	Bouwvoor
2,25	-2,99	Klei, matig siltig, matig stevig, grijs, blauwgrijs gevlekt, met blauwgrijze zones, enkele roestvlekken, heterogeen, veenbrokken	Moernering
2,30	-3,04	Veen, matig amorf, donkerbruin, riet	Hollandveen Laagpakket
2,75	-3,49	Klei, zwak siltig, slap, grijs, riet, naar onder klei, zwak zandig	Laagpakket van Wormer

BORING	**55.B06**	X	56.852
		Y	387.118
BESCHRIJVER	F. D'hondt	Z	-0,71

meter - mv	meter tov NAP	Beschrijving	Lithostratigrafie
0,35	-1,06	Klei, zwak siltig, matig stevig, bruingrijs	Bouwvoor
1,40	-2,11	Klei, matig siltig, matig stevig tot matig slap, blauwgrijs, grijs gevlekt, heterogeen, veenbrokken	Moernering
1,90	-2,61	Veen, matig amorf, donkerbruin, vanaf 1.70 riet	Hollandveen Laagpakket
2,30	-3,01	Klei, matig zandig, slap, grijs, riet	Laagpakket van Wormer

BORING	55.B07	X	56.853
		Y	387.132
BESCHRIJVER	F. D'hondt	Z	-0,71

meter - mv	meter tov NAP	Beschrijving	Lithostratigrafie
0,40	-1,11	Klei, zwak siltig, matig stevig, bruingrijs	Bouwvoor
1,65	-2,36	Klei, matig siltig, matig stevig, blauwgrijs, enkele roestvlekken, ijzerconcreties, veenbrokjes, heterogeen	Moernering
1,75	-2,46	Veen, matig amorf, donkerbruin	Hollandveen Laagpakket
2,00	-2,71	Klei, matig zandig, slap, grijs, riet	Laagpakket van Wormer

Mastvoetlocatie 1056

BORING	**56.S01**	X	57.102
		Y	387.323
BESCHRIJVER	F. D'hondt	Z	0,94

meter - mv	meter tov NAP	Beschrijving	Lithostratigrafie
0,70	0,24	Zand, zwak siltig, matig fijn, grijsbruin, bovenin zwak humeus, heterogeen	Opgebracht
1,00	-0,06	Zand, zwak siltig, matig fijn, blauwgrijs, spoor van puinspikkels (vanaf 1.00 gestuit (leiding?))	Opgebracht

BORING	**56.S02**	X	57.108
		Y	387.328
BESCHRIJVER	F. D'hondt	Z	0,37

meter - mv	meter tov NAP	Beschrijving	Lithostratigrafie
0,60	-0,23	Klei en zand, donkerbruin, heterogeen, bovenin matig humeus, spoor van plantenresten	Opgebracht / Vergraven
1,50	-1,13	Klei, zwak zandig, matig stevig, grijs, tussen 90 en 1.10 zandlaag, enkele roestvlekken	Laagpakket van Walcheren
2,40	-2,03	Klei, matig zandig, matig slap, blauwgrijs, complete schelpen, zandlaagjes	Laagpakket van Walcheren: geul
3,00	-2,63	Zand, zwak siltig, zeer fijn, donkergrijs, gruis schelpmateriaal, bovenin enkele kleilaagjes (vanaf 3.00 guts loopt leeg)	Laagpakket van Walcheren: geul

BORING	**56.S03**	X	57.115
		Y	387.309
BESCHRIJVER	F. D'hondt	Z	0,89

meter - mv	meter tov NAP	Beschrijving	Lithostratigrafie
0,15	0,74	Klei, matig zandig, matig stevig, donkerbruin,sterk humeus	Bouwvoor
0,30	0,59	Zand, matig siltig, matig fijn, grijsbruin, enkele roestvlekken, heterogeen	Opgebracht
0,80	0,09	Klei, matig zandig, matig stevig, matig humeus, donkerbruingrijs, heterogeen	Opgebracht
1,10	-0,21	Zand, kleiig, matig fijn, grijsbruin	Oude bouwvoor
1,70	-0,81	Zand, kleiig, matig fijn, lichtgrijs, spoor van roestvlekken, fragment schelpmateriaal	Laagpakket van Walcheren
3,20	-2,31	Zand, matig siltig, matig fijn, blauwgrijs, complete schelpen, kleilaagjes	Laagpakket van Walcheren
3,60	-2,71	Zand, zwak siltig, zeer fijn, blauwgrijs tot donkergrijs, gruis schelpmateriaal	Laagpakket van Walcheren

BORING	**56.S04**	X	57.120
		Y	387.312
BESCHRIJVER	F. D'hondt	Z	0,68

meter - mv	meter tov NAP	Beschrijving	Lithostratigrafie
0,10	0,58	Klei, sterk zandig, matig stevig, donkerbruingrijs, sterk humeus	Bouwvoor
0,60	0,08	Zand, zwak siltig, matig fijn, grijs, spoor van roestvlekken, kleibrokken, heterogeen	Opgebracht
0,95	-0,27	Zand, kleiig, matig fijn, donkergrijsbruin, zwak humeus	Oude bouwvoor
2,20	-1,52	Zand, kleiig, matig fijn, grijs, spoor van roestvlekken, fragment schelpmateriaal	Laagpakket van Walcheren
3,05	-2,37	Klei, sterk zandig, matig slap, blauwgrijs, complete schelpen, zandlaagjes	Laagpakket van Walcheren
3,20	-2,52	Zand, matig siltig, zeer fijn, donkergrijs, fragment schelpmateriaal (vanaf 3.20 guts loopt leeg)	Laagpakket van Walcheren

Mastvoetlocatie 1057

BORING	**57.B03**	X	57.357
		Y	387.512
BESCHRIJVER	F. D'hondt	Z	-0,64

meter - mv	meter tov NAP	Beschrijving	Lithostratigrafie
0,40	-1,04	Klei, matig siltig, matig stevig, donkerbruingrijs, gemengd met grijs zand, heterogeen	vergraven, boomgaard?
1,05	-1,69	Klei, matig siltig, matig stevig, grijs ,enkele roestvlekken	Laagpakket van Walcheren
1,15	-1,79	Klei, zwak siltig, stevig, donkergrijs, venig	Laagpakket van Walcheren
1,40	-2,04	Veen, sterk amorf, zwart, op 1.25 meter kleilaag	Hollandveen Laagpakket: veraard
2,30	-2,94	Veen, matig amorf, donkerbruin	Hollandveen Laagpakket: intact
2,75	-3,39	Veen, matig amorf, bruin, riet	Hollandveen Laagpakket: intact
3,00	-3,64	Klei, zwak siltig, slap, blauwgrijs, riet, bovenin sterk venig	Laagpakket van Wormer

BORING	**57.B04**	X	57.363

		Y	387.496
BESCHRIJVER	F. D'hondt	Z	-0,62

meter - mv	meter tov NAP	Beschrijving	Lithostratigrafie
0,35	-0,97	Klei, matig siltig, matig stevig, donkerbruingrijs, gemengd met grijs zand, heterogeen	vergraven, boomgaard?
1,00	-1,62	Klei, matig zandig, matig stevig, grijs, enkele roestvlekken, zandlaagjes	Laagpakket van Walcheren
1,05	-1,67	Klei, zwak siltig, stevig, donkergrijs, venig	Laagpakket van Walcheren
1,25	-1,87	Veen, sterk amorf, zwart, geoxideerd, sterk veraard	Hollandveen Laagpakket: veraard
2,20	-2,82	Veen, sterk amorf, donkerbruin	Hollandveen Laagpakket: intact
2,55	-3,17	Veen, matig amorf, bruin,riet	Hollandveen Laagpakket: intact
3,00	-3,62	Klei, zwak siltig, slap, blauwgrijs, riet, tussen 2.65 en 2.75 meter veenlaag rietveen	Laagpakket van Wormer

BORING	**57.B06**	X	57.345
		Y	387.501
BESCHRIJVER	F. D'hondt	Z	-0,63

meter - mv	meter tov NAP	Beschrijving	Lithostratigrafie
0,35	-0,98	Klei, matig siltig, matig stevig, donkerbruingrijs, gemengd met grijs zand, heterogeen	vergraven, boomgaard?
1,30	-1,93	Klei, zwak zandig, matig stevig, grijs, enkele roestvlekken	Laagpakket van Walcheren
1,35	-1,98	Klei, zwak siltig, stevig, donkergrijs, venig	Laagpakket van Walcheren
1,60	-2,23	Veen, sterk amorf, zwart, geoxideerd, sterk veraard, met kleiige laagjes	Hollandveen Laagpakket: veraard
2,75	-3,38	Veen, matig amorf, donkerbruin, vanaf 2.30 meter riet, bruin	Hollandveen Laagpakket: intact
3,00	-3,63	Klei, zwak siltig, slap, blauwgrijs, riet	Laagpakket van Wormer

BORING	**57.B07**	X	57.337
		Y	387.517
BESCHRIJVER	F. D'hondt	Z	-0,66

meter - mv	meter tov NAP	Beschrijving	Lithostratigrafie
0,35	-1,01	Klei, matig siltig, matig stevig, donkerbruingrijs, gemengd met grijs zand, heterogeen	vergraven, boomgaard?
1,90	-2,56	Klei, zwak siltig, matig stevig, grijs, enkele roestvlekken, brokkelig	Moernering
2,70	-3,36	Klei, zwak zandig, matig stevig, blauwgrijs, brokkelig, zandbrokjes	Moernering
2,80	-3,46	Veen, zwak amorf, bruin, riet	Hollandveen Laagpakket
3,30	-3,96	Klei, zwak siltig, slap, blauwgrijs, riet	Laagpakket van Wormer

Mastvoetlocatie 1058

BORING	**58.B03**	X	57.560
		Y	387.669
BESCHRIJVER	F. D'hondt	Z	-1,14

meter - mv	meter tov NAP	Beschrijving	Lithostratigrafie
0,30	-1,44	Klei, zwak siltig, matig stevig, donkerbruingrijs	Bouwvoor
1,40	-2,54	Zand, matig kleiig, matig fijn, grijs, enkele roestvlekken, kleilagen, vanaf 1.10 klei, matig zandig	Laagpakket van Walcheren
1,65	-2,79	Klei, zwak zandig, matig slap, blauwgrijs, gruis schelp-materiaal	Laagpakket van Walcheren
2,05	-3,19	Veen, zwak amorf, donkerbruin, riet	Hollandveen Laagpakket: geërodeerd
2,75	-3,89	Klei, matig zandig, slap, grijs, bovenin riet, vanaf 2.40 zandlaagjes	Laagpakket van Wormer

BORING	**58.B04**	X	57.564
		Y	387.653
BESCHRIJVER	F. D'hondt	Z	-1,14

meter - mv	meter tov NAP	Beschrijving	Lithostratigrafie
0,30	-1,44	Klei, zwak siltig, matig stevig, donkerbruingrijs	Bouwvoor
0,75	-1,89	Zand, zwak siltig, matig fijn, grijs, enkele roestvlekken	Laagpakket van Walcheren
1,40	-2,54	Veen, sterk amorf, zwart, geoxideerd, sterk veraard	Hollandveen Laagpakket: veraard
1,60	-2,74	Veen, sterk amorf, donkerbruin	Hollandveen Laagpakket: intact
1,75	-2,89	Veen, zwak amorf, bruin, riet	Hollandveen Laagpakket: intact
2,00	-3,14	Klei, zmatig zandig, slap, blauwgrijs, riet	Hollandveen Laagpakket: intact

BORING	**58.B06**	X	57.544
		Y	387.657
BESCHRIJVER	F. D'hondt	Z	-1,10

meter - mv	meter tov NAP	Beschrijving	Lithostratigrafie
0,30	-1,40	Klei, zwak siltig, matig stevig, donkerbruingrijs	Bouwvoor
0,90	-2,00	Zand, zwak kleiig, matig fijn, grijs, enkele roestvlekken	Laagpakket van Walcheren
1,50	-2,60	Veen, sterk amorf, zwart, tot 1.25 meter met kleilagen, sterk veraard, geoxideerd	Hollandveen Laagpakket: veraard
2,00	-3,10	Veen, matig amorf, bruin, riet	Hollandveen Laagpakket: intact
2,75	-3,85	Klei, matig zandig, slap, blauwgrijs, riet	Laagpakket van Wormer

BORING	**58.B07**	X	57.537
		Y	387.674
BESCHRIJVER	F. D'hondt	Z	-1,16

meter - mv	meter tov NAP	Beschrijving	Lithostratigrafie
0,30	-1,46	Klei, zwak siltig, matig stevig, donkerbruingrijs	Bouwvoor
1,00	-2,16	Klei, zwak zandig, matig stevig, grijs, enkele roestvlek-ken, zandlaagjes	Laagpakket van Walcheren
1,40	-2,56	Veen, matig amorf, donkerbruin-zwart, geoxideerd	Hollandveen Laagpakket: veraard

1,55	-2,71	Klei, zwak siltig, matig stevig, blauwgrijs	Laagpakket van Walcheren: klapklei
2,00	-3,16	Veen, matig amorf, donkerbruin, mos	Hollandveen Laagpakket
2,45	-3,61	Veen, zwak amorf, bruin, riet	Hollandveen Laagpakket
3,00	-4,16	Klei, zwak siltig, slap ,blauwgrijs, riet	Laagpakket van Wormer

Mastvoetlocatie 1060

BORING	**60.B03**	X	58.458
		Y	387.791
BESCHRIJVER	F. D'hondt	Z	-1,36

meter - mv	meter tov NAP	Beschrijving	Lithostratigrafie
0,30	-1,66	Klei, zwak siltig, matig stevig, donkerbruingrijs	Bouwvoor
0,55	-1,91	Klei, zwak siltig, matig stevig, grijs, enkele roestvlekken	Laagpakket van Walcheren
0,60	-1,96	Veen, matig amorf, zwart, geoxideerd	Hollandveen Laagpakket: veraard
1,20	-2,56	Veen, matig amorf, donkerbruin	Hollandveen Laagpakket: intact
1,65	-3,01	Veen, zwak amorf, bruin, riet	Hollandveen Laagpakket: intact
2,00	-3,36	Klei, zwak siltig, slap, blauwgrijs, riet	Laagpakket van Wormer

BORING	**60.B04**	X	58.453
		Y	387.775
BESCHRIJVER	F. D'hondt	Z	-1,32

meter - mv	meter tov NAP	Beschrijving	Lithostratigrafie
0,30	-1,62	Klei, zwak siltig, matig stevig, donkerbruingrijs	Bouwvoor
0,70	-2,02	Klei, sterk zandig, matig slap, grijs	Laagpakket van Walcheren
0,85	-2,17	Veen, matig amorf, zwart, geoxideerd	Hollandveen Laagpakket
1,20	-2,52	Veen, matig amorf, donkerbruin	Hollandveen Laagpakket
1,55	-2,87	Veen, zwak amorf, bruin, riet	Hollandveen Laagpakket
2,00	-3,32	Klei, sterk zandig, slap, blauwgrijs, riet	Laagpakket van Wormer

BORING	**60.B06**	X	58.443
		Y	387.791
BESCHRIJVER	F. D'hondt	Z	-1,27

meter - mv	meter tov NAP	Beschrijving	Lithostratigrafie
0,30	-1,57	Klei, zwak siltig, matig stevig, donkerbruingrijs	Bouwvoor
0,75	-2,02	Klei, zwak siltig, matig stevig, grijs, enkele roestvlekken, vanaf 0.60 veengruis	Laagpakket van Walcheren
1,20	-2,47	Veen, matig amorf, zwart, geoxideerd, sterk veraard	Hollandveen Laagpakket: veraard
1,75	-3,02	Veen, matig amorf, donkerbruin	Hollandveen Laagpakket: intact
2,05	-3,32	Veen, zwak amorf, bruin, riet	Hollandveen Laagpakket: intact
2,55	-3,82	Klei, zwak siltig, slap, blauwgrijs, riet, bovenin grijs	Laagpakket van Wormer

BORING	**60.B07**	X	58.447
		Y	387.808
BESCHRIJVER	F. D'hondt	Z	-1,26

meter - mv	meter tov NAP	Beschrijving	Lithostratigrafie
0,30	-1,56	Klei, zwak siltig, matig stevig, donkerbruingrijs	Bouwvoor
0,55	-1,81	Klei, zwak siltig, matig stevig, grijs, enkele roestvlekken	Laagpakket van Walcheren
0,80	-2,06	Veen, matig amorf, zwart, geoxideerd, sterk veraard	Hollandveen Laagpakket: veraard
1,30	-2,56	Veen, matig amorf, donkerbruin	Hollandveen Laagpakket: intact
1,95	-3,21	Veen, zwak amorf, bruin, riet	Hollandveen Laagpakket: intact
2,55	-3,81	Klei, zwak zandig, slap, blauwgrijs, riet, bovenin grijs	Laagpakket van Wormer

Mastvoetlocatie 1061

BORING	**61.B03**	X	58.858
		Y	387.793
BESCHRIJVER	F. D'hondt	Z	1,62

meter - mv	meter tov NAP	Beschrijving	Lithostratigrafie
3,00	-1,38	heterogeen pakket van klei, zand en veen	opgebracht

BORING	**61.B04**	X	58.853
		Y	387.776
BESCHRIJVER	F. D'hondt	Z	-0,89

meter - mv	meter tov NAP	Beschrijving	Lithostratigrafie
3,00	-2,32	heterogeen pakket van klei, zand en veen	opgebracht

BORING	**61.B06**	X	58.843
		Y	387.791
BESCHRIJVER	F. D'hondt	Z	1,53

meter - mv	meter tov NAP	Beschrijving	Lithostratigrafie
3,00	-1,47	heterogeen pakket van klei, zand, veen en beton	opgebracht

BORING	**61.B07**	X	58.847
		Y	387.809
BESCHRIJVER	F. D'hondt	Z	1,46

meter - mv	meter tov NAP	Beschrijving	Lithostratigrafie
3,00	-1,54	heterogeen pakket van klei, zand, veen en beton	opgebracht

BORING	**61.B09**	X	58.815
		Y	387.827
BESCHRIJVER	F. D'hondt	Z	-0,64

meter - mv	meter tov NAP	Beschrijving	Lithostratigrafie
0,40	-1,04	Klei, zwak siltig, stevig, donkerbruingrijs	Bouwvoor
1,45	-2,09	Klei, zwak siltig, stevig, grijs, enkele roestvlekken	Laagpakket van Walcheren
1,55	-2,19	Veen, matig amorf, zwart, geoxideerd	Hollandveen Laagpakket
2,10	-2,74	Veen, matig amorf, donkerbruin	Hollandveen Laagpakket
2,45	-3,09	Veen, zwak amorf, bruin, riet	Hollandveen Laagpakket
3,00	-3,64	Klei, zwak zandig, slap, blauwgrijs, riet, bovenin grijs	Laagpakket van Wormer

Mastvoetlocatie 1062

BORING	**62.B03**	X	59.245
		Y	387.794
BESCHRIJVER	F. D'hondt	Z	-0,81

meter - mv	meter tov NAP	Beschrijving	Lithostratigrafie
0,30	-1,11	Klei, zwak siltig, matig stevig, donkerbruingrijs	Bouwvoor
1,20	-2,01	Klei, zwak siltig, matig stevig, donkergrijs, heterogeen, veel baksteenpuin uit de Late Middeleeuwen	Vergraven
1,25	-2,06	Veen, matig amorf, zwart, geoxideerd	Hollandveen Laagpakket
1,65	-2,46	Veen, matig amorf, donkerbruin, hout	Hollandveen Laagpakket
1,85	-2,66	Veen, matig tot zwak amorf, bruin, riet	Hollandveen Laagpakket
2,25	-3,06	Klei, zwak zandig, slap, grijs, riet, vanaf 2.00 blauwgrijs	Laagpakket van Wormer

BORING	**62.B04**	X	59.242
		Y	387.777
BESCHRIJVER	F. D'hondt	Z	-0,83

meter - mv	meter tov NAP	Beschrijving	Lithostratigrafie
0,15	-0,98	Klei, zwak siltig, matig stevig, donkerbruingrijs	Bouwvoor
0,40	-1,23	Klei, zwak siltig, matig stevig, donkergrijs, heterogeen	Vergraven
0,90	-1,73	Klei, zwak siltig, matig stevig, grijs, enkele roestvlekken	Laagpakket van Walcheren
1,20	-2,03	Veen, matig amorf, zwart, geoxideerd, sterk veraard	Hollandveen Laagpakket
1,65	-2,48	Veen, matig amorf, donkerbruin, hout	Hollandveen Laagpakket
1,90	-2,73	Veen, matig amorf, bruin, riet	Hollandveen Laagpakket
2,55	-3,38	Klei, zwak zandig, slap, grijs, riet, vanaf 2.15 blauwgrijs	Laagpakket van Wormer

BORING	**62.B06**	X	59.230
		Y	387.793
BESCHRIJVER	F. D'hondt	Z	-0,96

meter - mv	meter tov NAP	Beschrijving	Lithostratigrafie
0,30	-1,26	Klei, zwak siltig, matig stevig, donkerbruingrijs	Bouwvoor
0,80	-1,76	Klei, zwak siltig, matig stevig, grijs, enkele roestvlekken	Laagpakket van Walcheren
0,85	-1,81	Veen, matig amorf, donkerbruin-zwart, zwak geoxideerd	Hollandveen Laagpakket
1,40	-2,36	Veen, matig amorf, donkerbruin	Hollandveen Laagpakket
1,75	-2,71	Veen, zwak amorf, bruin, riet	Hollandveen Laagpakket
2,00	-2,96	Klei, zwak zandig, slap, grijs, riet	Laagpakket van Wormer

BORING	**62.B07**	X	59.233
		Y	387.810
BESCHRIJVER	F. D'hondt	Z	-0,77

meter - mv	meter tov NAP	Beschrijving	Lithostratigrafie
0,30	-1,07	Klei, zwak siltig, matig stevig, donkerbruingrijs	Bouwvoor
1,25	-2,02	Klei, zwak siltig, matig stevig, grijs, heterogeen, puin-spikkels (Late Middeleeuwen), fosfaatvlekken, vanaf 0.80 met veenbrokken	Vergraven
1,75	-2,52	Veen, matig amorf, donkerbruin, hout	Hollandveen Laagpakket
1,90	-2,67	Veen, zwak amorf, bruin, riet	Hollandveen Laagpakket
2,55	-3,32	Klei, zwak zandig, slap, grijs, riet, bovenin klei, zwak siltig, grijs	Laagpakket van Wormer

Mastvoetlocatie 1063

BORING	**63.B03**	X	59.644
		Y	387.815
BESCHRIJVER	F. D'hondt	Z	-1,39

meter - mv	meter tov NAP	Beschrijving	Lithostratigrafie
0,10	-1,49	Klei, zwak siltig, matig stevig, bruingrijs	Bouwvoor
0,35	-1,74	Klei, zwak siltig, matig stevig, grijs, enkele roestvlekken	Laagpakket van Walcheren
0,75	-2,14	Veen, sterk amorf, zwart, geoxideerd, sterk veraard	Hollandveen Laagpakket: veraard
1,25	-2,64	Veen, zwak amorf, bruin, riet	Hollandveen Laagpakket: intact
2,00	-3,39	Klei, zwak siltig, slap, blauwgrijs, riet, vanaf 1.60 klei, zwak zandig	Laagpakket van Wormer

BORING	**63.B04**	X	59.642
		Y	387.799
BESCHRIJVER	F. D'hondt	Z	-1,29

meter - mv	meter tov NAP	Beschrijving	Lithostratigrafie
0,15	-1,44	Klei, zwak siltig, matig stevig, bruingrijs	Bouwvoor
0,50	-1,79	Klei, zwak siltig, matig stevig, grijs, enkele roestvlekken	Laagpakket van Walcheren
0,90	-2,19	Veen, matig amorf, zwart, geoxideerd, sterk veraard, losse structuur	Hollandveen Laagpakket: veraard
1,85	-3,14	Veen, zwak amorf, bruin, riet	Hollandveen Laagpakket: intact
2,00	-3,29	Klei, matig zandig, slap, grijs, riet, bovenin veenlaagjes	Laagpakket van Wormer

BORING	**63.B06**	X	59.629
		Y	387.813
BESCHRIJVER	F. D'hondt	Z	-1,42

meter - mv	meter tov NAP	Beschrijving	Lithostratigrafie
0,20	-1,62	Klei, zwak siltig, matig stevig, bruingrijs	Bouwvoor
0,50	-1,92	Klei, zwak siltig, matig stevig, grijs, enkele roestvlekken	Laagpakket van Walcheren
0,65	-2,07	Veen, sterk amorf, zwart, geoxideerd, sterk veraard	Hollandveen Laagpakket: veraard
1,20	-2,62	Veen, matig amorf, donkerbruin, hout	Hollandveen Laagpakket: intact
1,40	-2,82	Veen, zwak amorf, bruin, riet	Hollandveen Laagpakket: intact
2,00	-3,42	Klei, zwak zandig, slap, blauwgrijs, riet	Laagpakket van Wormer

BORING	**63.B07**	X	59.631
		Y	387.821
BESCHRIJVER	F. D'hondt	Z	-1,47

meter - mv	meter tov NAP	Beschrijving	Lithostratigrafie
0,10	-1,57	Klei, zwak siltig, matig stevig, bruingrijs	Bouwvoor
0,40	-1,87	Klei, zwak siltig, matig stevig, grijs, enkele roestvlekken	Laagpakket van Walcheren
0,80	-2,27	Veen, sterk amorf, zwart, geoxideerd, sterk veraard	Hollandveen Laagpakket: veraard
1,40	-2,87	Veen, zwak amorf, bruin, riet	Hollandveen Laagpakket: intact
2,00	-3,47	Klei, matig zandig, slap, grijs, riet	Laagpakket van Wormer

Mastvoetlocatie 1064

BORING	**64.B03**	X	60.012
		Y	387.836
BESCHRIJVER	F. D'hondt	Z	-1,23

meter - mv	meter tov NAP	Beschrijving	Lithostratigrafie
1,30	-2,53	Klei, zwak siltig, matig stevi, grijs, heterogeen, met zand, grind en veenbrokken gemengd	Vergraven
1,75	-2,98	Veen, zwak amorf, bruin, losse structuur, riet	Hollandveen Laagpakket
2,30	-3,53	Klei, zwak zandig, slap, blauwgrijs, riet	Laagpakket van Wormer

BORING	**64.B04**	X	60.008

		Y	387.818
BESCHRIJVER	F. D'hondt	Z	-0,89

meter - mv	meter tov NAP	Beschrijving	Lithostratigrafie
0,30	-1,19	Klei, zwak siltig, matig stevig, bruingrijs	Bouwvoor
0,90	-1,79	Klei, zwak siltig, matig stevig, grijs, enkele roestvlekken, onderin geen roestvlekken	Laagpakket van Walcheren
1,20	-2,09	Veen, sterk amorf, donkerbruin - zwart, geoxideerd, sterk veraard	Hollandveen Laagpakket: veraard
2,00	-2,89	Veen, matig amorf, roodbruin, veel hout	Hollandveen Laagpakket: intact
2,15	-3,04	Veen, zwak amorf, bruin, riet	Hollandveen Laagpakket: intact
2,55	-3,44	Klei, zwak zandig, slap, blauwgrijs, riet	Laagpakket van Wormer

BORING	**64.B06**	X	59.996
		Y	387.833
BESCHRIJVER	F. D'hondt	Z	-0,93

meter - mv	meter tov NAP	Beschrijving	Lithostratigrafie
0,30	-1,23	Klei, zwak siltig, matig stevig, bruingrijs	Bouwvoor
1,00	-1,93	Klei, zwak siltig, matig stevig, grijs, enkele roestvlekken	Laagpakket van Walcheren
1,25	-2,18	Veen, sterk amorf, zwart, geoxideerd, sterk veraard	Hollandveen Laagpakket: veraard
1,50	-2,43	Veen, sterk amorf, roodbruin	Hollandveen Laagpakket: intact
1,95	-2,88	Veen, matig amorf, bruin, riet	Hollandveen Laagpakket: intact
2,75	-3,68	Klei, zwak zandig, slap, lichtblauwgrijs, riet	Laagpakket van Wormer

BORING	**64.B07**	X	59.996
		Y	387.848
BESCHRIJVER	F. D'hondt	Z	-1,34

meter - mv	meter tov NAP	Beschrijving	Lithostratigrafie
0,15	-1,49	Klei, zwak siltig, matig stevig, bruingrijs	Bouwvoor
0,50	-1,84	Klei, zwak siltig, matig stevig, grijs, enkele roestvlekken	Laagpakket van Walcheren
1,10	-2,44	Veen, sterk amorf, zwart, hout, geoxideerd, sterk veraard	Hollandveen Laagpakket: veraard
1,40	-2,74	Veen, matig tot sterk amorf, roodbruin	Hollandveen Laagpakket: intact
1,60	-2,94	Veen, matig amorf, bruin, riet	Hollandveen Laagpakket: intact
2,00	-3,34	Klei, sterk zandig, slap, grijs, riet	Laagpakket van Wormer

Mastvoetlocatie 1065

BORING	**65.S01**	X	60.406
		Y	387.864
BESCHRIJVER	F. D'hondt	Z	-1,08

meter - mv	meter tov NAP	Beschrijving	Lithostratigrafie
0,35	-1,43	Klei, zwak zandig, matig stevig, grijsbruin, gruis schelp-materiaal	Bouwvoor
0,55	-1,63	Klei, zwak siltig, stevig, grijs, enkele roestvlekken, gruis schelpmateriaal	Moernering
1,45	-2,53	Klei, zwak siltig, matig slap, blauwgrijs, veenbrokken	Moernering
1,48	-2,56	Veen, matig amorf, donkerbruin, riet	Hollandveen Laagpakket
2,00	-3,08	Klei, matig zandig, slap, lichtblauwgrijs, riet	Laagpakket van Wormer

BORING	**65.S02**	X	60.400
		Y	387.865
BESCHRIJVER	F. D'hondt	Z	-1,16

meter - mv	meter tov NAP	Beschrijving	Lithostratigrafie
0,35	-1,51	Klei, zwak zandig, matig stevig, grijsbruin, gruis schelp-materiaal	Bouwvoor
0,55	-1,71	Klei, zwak siltig, matig stevig, grijs, enkele roestvlekken, heterogeen	Moernering
1,35	-2,51	Klei, zwak siltig, matig slap, blauwgrijs, veenbrokken	Moernering
1,40	-2,56	Veen, matig amorf, bruin, riet	Hollandveen Laagpakket
2,00	-3,16	Klei, zwak zandig, slap, lichtblauwgrijs, riet	Laagpakket van Wormer

BORING	**65.S03**	X	60.402
		Y	387.845
BESCHRIJVER	F. D'hondt	Z	-1,03

meter - mv	meter tov NAP	Beschrijving	Lithostratigrafie
0,40	-1,43	Klei, zwak zandig, matig stevig, grijsbruin, gruis schelp-materiaal	Bouwvoor
0,85	-1,88	Klei, zwak siltig, stevig, grijs, enkele roestvlekken	Moernering
1,50	-2,53	Klei, zwak siltig, matig stevig, blauwgrijs, veenbrokken	Moernering
1,70	-2,73	Veen, matig amorf, bruin, riet	Hollandveen Laagpakket
2,00	-3,03	Zand, matig kleiig, matig tot zeer fijn, lichtblauwgrijs, riet	Laagpakket van Wormer

BORING	**65.S04**	X	60.395
		Y	387.846
BESCHRIJVER	F. D'hondt	Z	-1,05

meter - mv	meter tov NAP	Beschrijving	Lithostratigrafie
0,40	-1,45	Klei, zwak zandig, matig stevig, grijsbruin, gruis schelpmateriaal	Bouwvoor
0,75	-1,80	Klei, zwak siltig, matig stevig, grijs, enkele roestvlekken, heterogeen, gruis schelpmateriaal	Moernering
0,85	-1,90	Veen, sterk amorf, zwart, geoxideerd, sterk veraard	Hollandveen Laagpakket: veraard
1,30	-2,35	Veen, sterk amorf, donkerbruin	Hollandveen Laagpakket: intact
1,60	-2,65	Veen, matig amorf, bruin, riet	Hollandveen Laagpakket: intact
2,00	-3,05	Zand, matig kleiig, matig tot zeer fijn, lichtblauwgrijs, riet	Laagpakket van Wormer

Mastvoetlocatie 1066

BORING	**66.S01**	X	60.701
		Y	387.701
BESCHRIJVER	F. D'hondt	Z	-0,08

meter - mv	meter tov NAP	Beschrijving	Lithostratigrafie
0,35	-0,43	Zand, zwak siltig, matig fijn, grijsbruin	Bouwvoor
0,60	-0,68	Zand, zwak siltig, matig fijn, lichtbruin, enkele roestvlekken	Laagpakket van Walcheren
0,90	-0,98	Zand, zwak siltig, matig fijn, lichtgrijs, enkele roestvlekken, gruis schelpmateriaal	Laagpakket van Walcheren
1,80	-1,88	Zand, zwak siltig, matig fijn, grijs, gruis schelpmateriaal	Laagpakket van Walcheren
2,60	-2,68	Zand, zwak siltig, matig fijn, blauwgrijs, gruis schelpmateriaal	Laagpakket van Walcheren: geulafzettingen
3,00	-3,08	Zand, zwak siltig, matig fijn, blauwgrijs, gruis schelpmateriaal, met blauwgrijze kleilagen	Laagpakket van Walcheren: geulafzettingen

BORING	**66.S02**	X	60.695
		Y	387.704
BESCHRIJVER	F. D'hondt	Z	-0,21

meter - mv	meter tov NAP	Beschrijving	Lithostratigrafie
0,40	-0,61	Zand, zwak siltig, matig fijn, grijsbruin	Bouwvoor
0,70	-0,91	Zand, zwak siltig, matig fijn, lichtbruin	Laagpakket van Walcheren
1,00	-1,21	Zand, matig kleiig, matig fijn, lichtgrijs, enkele roestvlekken, fragment schelpmateriaal	Laagpakket van Walcheren
1,60	-1,81	Zand, zwak siltig, matig fijn, grijs, spoor van roestvlekken, fragment schelpmateriaal	Laagpakket van Walcheren
1,95	-2,16	Zand, zwak siltig, matig fijn, blauwgrijs, fragment schelpmateriaal	Laagpakket van Walcheren: geulafzettingen
3,30	-3,51	Veen, matig amorf, donkerbruin, mos	Hollandveen Laagpakket: geërodeerd
3,55	-3,76	Klei, zwak siltig, slap, lichtblauwgrijs, riet	Laagpakket van Wormer

BORING	**66.S03**	X	60.692
		Y	387.684
BESCHRIJVER	F. D'hondt	Z	-0,12

meter - mv	meter tov NAP	Beschrijving	Lithostratigrafie
0,40	-0,52	Zand, zwak siltig, matig fijn, grijsbruin	Bouwvoor
0,55	-0,67	Zand, zwak siltig, matig fijn, lichtbruin, spoor van roestvlekken	Laagpakket van Walcheren: geulafzettingen
1,10	-1,22	Zand, zwak siltig, matig fijn, lichtgrijs, enkele roestvlekken	Laagpakket van Walcheren: geulafzettingen
1,80	-1,92	Zand, zwak siltig, matig fijn, blauwgrijs, fragment schelpmateriaal, veengruis	Laagpakket van Walcheren: geulafzettingen
2,50	-2,62	Zand, zwak siltig, matig fijn, grijs, fragment schelpmateriaal, veengruis	Laagpakket van Walcheren: geulafzettingen

BORING	**66.S04**	X	60.686
		Y	387.687
BESCHRIJVER	F. D'hondt	Z	-0,10

meter - mv	meter tov NAP	Beschrijving	Lithostratigrafie
0,40	-0,50	Zand, zwak siltig, matig fijn, grijsbruin	Bouwvoor
0,60	-0,70	Zand, zwak siltig, matig fijn, lichtbruin, spoor van roestvlekken	Laagpakket van Walcheren: geulafzettingen
1,10	-1,20	Zand, zwak siltig, matig fijn, lichtgrijs, enkele roestvlekken, fragment schelpmateriaal	Laagpakket van Walcheren: geulafzettingen
2,20	-2,30	Zand, zwak siltig, matig fijn, blauwgrijs, fragment schelpmateriaal, veengruis	Laagpakket van Walcheren: geulafzettingen
2,55	-2,65	Zand, zwak siltig, matig fijn, grijs, fragment schelpmateriaal, veengruis	Laagpakket van Walcheren: geulafzettingen

Mastvoetlocatie 1067

BORING	**67.S01**	X	60.986
		Y	387.526
BESCHRIJVER	F. D'hondt	Z	0,21

meter - mv	meter tov NAP	Beschrijving	Lithostratigrafie
0,35	-0,14	Zand, zwak kleiig, matig fijn, donkergrijs	Bouwvoor
0,50	-0,29	Zand, zwak siltig, matig fijn, donkerbruingrijs	Vergraven / verploegd
0,70	-0,49	Zand, zwak siltig, matig fijn, lichtbruin	Laagpakket van Walcheren
1,55	-1,34	Zand, zwak siltig, matig fijn, lichtgrijs, enkele roestvlekken	Laagpakket van Walcheren
3,00	-2,79	Zand, zwak siltig, matig fijn, blauwgrijs, fragment schelpmateriaal	Laagpakket van Walcheren: geulafzettingen

BORING	**67.S02**	X	60.980
		Y	387.530
BESCHRIJVER	F. D'hondt	Z	0,16

meter - mv	meter tov NAP	Beschrijving	Lithostratigrafie
0,40	-0,24	Zand, zwak kleiig, matig fijn, donkergrijs	Bouwvoor
0,55	-0,39	Zand, zwak siltig, matig fijn, lichtbruin	Laagpakket van Walcheren
1,50	-1,34	Zand, zwak siltig, matig fijn, lichtgrijs, enkele roestvlekken, fragment schelpmateriaal (guts loopt leeg vanaf 1.50)	Laagpakket van Walcheren: geulafzettingen

BORING	**67.S03**	X	60.976
		Y	387.509
BESCHRIJVER	F. D'hondt	Z	0,15

meter - mv	meter tov NAP	Beschrijving	Lithostratigrafie
0,30	-0,15	Zand, zwak kleiig, matig fijn, donkergrijs	Bouwvoor
0,45	-0,30	Zand, zwak siltig, matig fijn, lichtbruin	Laagpakket van Walcheren
1,30	-1,15	Zand, zwak siltig, matig fijn, lichtgrijs, enkele roestvlekken, fragment schelpmateriaal (ox/red grens niet vast te stellen, guts loopt leeg)	Laagpakket van Walcheren: geulafzettingen

BORING	**67.S04**	X	60.970
		Y	387.513
BESCHRIJVER	F. D'hondt	Z	0,09

meter - mv	meter tov NAP	Beschrijving	Lithostratigrafie
0,35	-0,26	Zand, zwak kleiig, matig fijn, donkergrijs	Bouwvoor
0,50	-0,41	Zand, zwak siltig, matig fijn, lichtbruin	Laagpakket van Walcheren: geulafzettingen
1,35	-1,26	Zand, zwak siltig, matig fijn, lichtgrijs, enkele roestvlekken	Laagpakket van Walcheren
2,00	-1,91	Zand, zwak siltig, matig fijn, grijs tot blauwgrijs, fragment schelpmateriaal (guts loopt leeg vanaf 2.00)	Laagpakket van Walcheren

Mastvoetlocatie 1068

BORING	**68.S01**	X	61.254
		Y	387.350
BESCHRIJVER	F. D'hondt	Z	0,57

meter - mv	meter tov NAP	Beschrijving	Lithostratigrafie
0,45	0,12	Zand, zwak kleiig, matig fijn, donkerbruingrijs, zwak humeus, veel puinspikkels	Bouwvoor
1,55	-0,98	Zand, zwak siltig, zeer fijn, grijs, enkele roestvlekken, kalkloos	Laagpakket van Walcheren
2,10	-1,53	Zand, zwak siltig, zeer fijn, grijs, spoor van roestvlekken, kalkloos	Laagpakket van Walcheren
2,75	-2,18	Zand, zwak siltig, zeer fijn, grijs, kalkloos	Laagpakket van Walcheren

BORING	**68.S02**	X	61.262
		Y	387.347
BESCHRIJVER	F. D'hondt	Z	0,49

meter - mv	meter tov NAP	Beschrijving	Lithostratigrafie
0,45	0,04	Zand, zwak kleiig, matig tot zeer fijn, donkerbruingrijs, zwak humeus, enkele puinbrokken	Bouwvoor
0,55	-0,06	Zand, zwak siltig, zeer fijn, lichtgrijs, enkele puinspikkels	Vergraven
1,25	-0,76	Zand, zwak siltig, zeer fijn, grijs, enkele roestvlekken, kalkloos	Laagpakket van Walcheren
1,50	-1,01	Zand, zwak siltig, zeer fijn, grijs, veel roestvlekken	Laagpakket van Walcheren
2,00	-1,51	Zand, zwak siltig, zeer fijn, grijs, kalkloos	Laagpakket van Walcheren: geulafzettingen

BORING	**68.S03**	X	61.244
		Y	387.333
BESCHRIJVER	F. D'hondt	Z	0,59

meter - mv	meter tov NAP	Beschrijving	Lithostratigrafie
0,35	0,24	Zand, zwak kleiig, matig fijn, donkerbruingrijs, zwak humeus, veel puinspikkels	Bouwvoor
1,00	-0,41	Zand, zwak siltig, zeer fijn, bruin, bovenin spoellaagjes klei, spoor van puinspikkels, zwak humeus	Vulling sloot?
1,50	-0,91	Zand, zwak siltig, zeer fijn, bruingrijs, heterogeen	Heterogeen
1,75	-1,16	Zand, zwak siltig, zeer fijn, grijs, veel roestvlekken, gruis schelpmateriaal, kalkarm	Laagpakket van Walcheren
2,30	-1,71	Zand, zwak siltig, zeer fijn, grijs, kalkloos	Laagpakket van Walcheren

BORING	**68.S04**	X	61.250
		Y	387.330
BESCHRIJVER	F. D'hondt	Z	0,66

meter - mv	meter tov NAP	Beschrijving	Lithostratigrafie
0,35	0,31	Zand, zwak kleiig, matig fijn, donkerbruingrijs, zwak humeus, veel puinspikkels	Bouwvoor
0,65	0,01	Zand, zwak siltig, zeer fijn, donkergrijs, spoor van puinspikkels, spoor van aardewerk (fragment rood, geglazuurd: NTB - NTC)	Laagpakket van Walcheren
1,65	-0,99	Zand, zwak siltig, zeer fijn, grijs, enkele roestvlekken, kalkarm, onderin veel roestvlekken, enkel kleilaagje	Laagpakket van Walcheren
2,30	-1,64	Zand, zwak siltig, zeer fijn, grijs, kalkloos	Laagpakket van Walcheren

Mastvoetlocatie 1069

BORING	**69.B03**	X	61.614
		Y	387.103
BESCHRIJVER	F. D'hondt	Z	0,70

meter - mv	meter tov NAP	Beschrijving	Lithostratigrafie
0,30	0,40	Zand, sterk siltig, matig fijn, donkerbruingrijs	Bouwvoor
1,25	-0,55	Zand, zwak siltig, matig fijn, grijs, enkele roestvlekken, gruis schelpmateriaal	Laagpakket van Walcheren: geulafzettingen
1,80	-1,10	Zand, zwak siltig, matig fijn, grijs, enkel roestvlekken, gruis schelpmateriaal, fijne siltlaagjes	Laagpakket van Walcheren: geulafzettingen
2,55	-1,85	Zand, zwak siltig, matig fijn, grijs - donkergrijs, gruis schelpmateriaal	Laagpakket van Walcheren: geulafzettingen

BORING	**69.B04**	X	61.601
		Y	387.092
BESCHRIJVER	F. D'hondt	Z	0,61

meter - mv	meter tov NAP	Beschrijving	Lithostratigrafie
0,30	0,31	Zand, sterk siltig, matig fijn, donkerbruingrijs	Bouwvoor
1,40	-0,79	Zand, zwak siltig, matig fijn, grijs, enkele roestvlekken, gruis schelpmateriaal	Laagpakket van Walcheren: geulafzettingen
2,00	-1,39	Zand, zwak siltig, matig fijn, grijs - donkergrijs, gruis schelpmateriaal	Laagpakket van Walcheren: geulafzettingen

BORING	**69.B06**	X	61.599
		Y	387.113
BESCHRIJVER	F. D'hondt	Z	0,59

meter - mv	meter tov NAP	Beschrijving	Lithostratigrafie
0,30	0,29	Zand, sterk siltig, matig fijn, donkerbruingrijs	Bouwvoor
0,80	-0,21	Zand, zwak siltig, matig fijn, grijs, enkele roestvlekken, fijne kleilaagjes	Laagpakket van Walcheren
1,60	-1,01	Zand, zwak siltig, matig fijn, grijs, spoor van roestvlekken, gruis schelpmateriaal	Laagpakket van Walcheren: geulafzettingen
2,50	-1,91	Zand, zwak siltig, matig fijn, grijs, gruis schelpmateriaal	Laagpakket van Walcheren: geulafzettingen

BORING	**69.B07**	X	61.612
		Y	387.124
BESCHRIJVER	F. D'hondt	Z	0,56

meter - mv	meter tov NAP	Beschrijving	Lithostratigrafie
0,30	0,26	Zand, sterk siltig, matig fijn, donkerbruingrijs	Bouwvoor
0,95	-0,39	Zand, zwak siltig, matig fijn, grijs, enkele roestvlekken, zeer fijne kleilaagjes	Laagpakket van Walcheren: geulafzettingen
2,00	-1,44	Zand, zwak siltig, matig fijn, grijs, spoor van roestvlekken	Laagpakket van Walcheren: geulafzettingen

Mastvoetlocatie 1070

BORING	**70.B03**	X	61.964
		Y	386.875
BESCHRIJVER	F. D'hondt	Z	-0,03

meter - mv	meter tov NAP	Beschrijving	Lithostratigrafie
0,30	-0,33	Klei, zwak zandig, matig stevig, donkerbruingrijs	Bouwvoor
0,60	-0,63	Klei, zwak zandig, matig stevig, grijs, enkele roestvlekken	Laagpakket van Walcheren
1,45	-1,48	Zand, zwak kleiig, matig fijn, grijs, enkele roestvlekken, fragment schelpmateriaal, kleilaagjes	Laagpakket van Walcheren: geulafzettingen
2,00	-2,03	Zand, zwak siltig, matig fijn, grijs, bovenin spoor van roestvlekken, fragment schelpmateriaal	Laagpakket van Walcheren: geulafzettingen

BORING	**70.B04**	X	61.951
		Y	386.863
BESCHRIJVER	F. D'hondt	Z	0,07

meter - mv	meter tov NAP	Beschrijving	Lithostratigrafie
0,30	-0,24	Klei, zwak zandig, matig stevig, donkerbruingrijs	Bouwvoor
2,05	-1,99	Klei, zwak siltig, matig stevig, grijs, enkele roestvlekken, gruis schelpmateriaal, zandlaagjes (geband)	Laagpakket van Walcheren
3,35	-3,29	Klei, zwak siltig, matig slap, blauwgrijs, venige laagjes, bovenin dy, fragment schelpmateriaal, zandlaagjes	Laagpakket van Walcheren

BORING	**70.B06**	X	61.950
		Y	386.882
BESCHRIJVER	F. D'hondt	Z	-0,01

meter - mv	meter tov NAP	Beschrijving	Lithostratigrafie
0,30	-0,31	Klei, zwak zandig, matig stevig, donkerbruingrijs	Bouwvoor
0,60	-0,61	Zand, zwak kleiig, matig fijn, grijs, enkele roestvlekken, gruis schelpmateriaal	Laagpakket van Walcheren
1,75	-1,76	Zand, zwak siltig, matig fijn, grijs, enkele roestvlekken, gruis schelpmateriaal, kleilaagjes	Laagpakket van Walcheren
2,00	-2,01	Zand, zwak siltig, matig fijn, blauwgrijs, fragment schelpmateriaal, bovenin kleilaagjes (vanaf 2.00 guts loopt leeg)	Laagpakket van Walcheren

BORING	**70.B07**	X	61.963
		Y	386.894
BESCHRIJVER	F. D'hondt	Z	-0,12

meter - mv	meter tov NAP	Beschrijving	Lithostratigrafie
0,30	-0,42	Klei, zwak zandig, matig stevig, donkerbruingrijs	Bouwvoor
1,75	-1,87	Zand, zwak siltig, matig fijn, lichtgrijs, gruis schelpmateriaal, kleilaagjes	Laagpakket van Walcheren
2,85	-2,97	Zand, zwak siltig, matig fijn, blauwgrijs, fragment schelpmateriaal, bovenin kleilaagjes, veengruis	Laagpakket van Walcheren: geulafzettingen

Mastvoetlocatie 1071

BORING	**71.B03**	X	62.316
		Y	386.641
BESCHRIJVER	F. D'hondt	Z	-0,47

meter - mv	meter tov NAP	Beschrijving	Lithostratigrafie
0,45	-0,92	Zand, zwak siltig, matig fijn, donkerbruingrijs, matig humeus, heterogeen	Bouwvoor
1,20	-1,67	Zand, matig siltig, matig fijn, lichtgrijs, spoor van roestvlekken, fragment schelpmateriaal	Laagpakket van Walcheren
2,10	-2,57	Zand, zwak siltig, matig fijn, blauwgrijs, fragment schelpmateriaal, veengruislaagjes	Laagpakket van Walcheren
3,00	-3,47	Veen, matig amorf, donkerbruin, vanaf 2.55 riet	Hollandveen Laagpakket: geërodeerd
3,55	-4,02	Klei, zwak siltig, slap, lichtblauwgrijs, bovenin riet	Laagpakket van Wormer

BORING	**71.B04**	X	62.305
		Y	386.631
BESCHRIJVER	F. D'hondt	Z	-0,50

meter - mv	meter tov NAP	Beschrijving	Lithostratigrafie
0,50	-1,00	Zand, zwak siltig, matig fijn, donkerbruingrijs, matig humeus, heterogeen	Bouwvoor
1,40	-1,90	Zand, matig siltig, matig fijn, lichtgrijs, enkele roestvlekken, gruis schelpmateriaal	Laagpakket van Walcheren: geulafzettingen
1,80	-2,30	Zand, zwak siltig, matig fijn, donkergrijs, fragment schelpmateriaal	Laagpakket van Walcheren: geulafzettingen
2,20	-2,70	Klei, matig siltig, slap, donkergrijs	Laagpakket van Walcheren: geulafzettingen
3,70	-4,20	Zand, matig siltig, matig fijn, donkergrijs, kleilaagjes, veenbrokken	Laagpakket van Walcheren: geulafzettingen

BORING	**71.B06**	X	62.304
		Y	386.651
BESCHRIJVER	F. D'hondt	Z	-0,54

meter - mv	meter tov NAP	Beschrijving	Lithostratigrafie
0,50	-1,04	Zand, zwak siltig, matig fijn, donkerbruingrijs, matig humeus, heterogeen	Bouwvoor en vergraven
1,45	-1,99	Zand, zwak siltig, matig fijn, lichtgrijs, spoor van roestvlekken, gruis schelpmateriaal	Laagpakket van Walcheren
2,00	-2,54	Zand, zwak siltig, matig fijn, blauwgrijs, fragment schelpmateriaal, veengruis	Laagpakket van Walcheren
3,00	-3,54	Zand en kleilaminatie, donkergrijs, op 2.10 veenbrokken (vanaf 3.00 zand, guts loopt leeg)	Laagpakket van Walcheren

BORING	**71.B07**	X	62.316
		Y	386.663
BESCHRIJVER	F. D'hondt	Z	-0,92

meter - mv	meter tov NAP	Beschrijving	Lithostratigrafie
0,50	-1,42	Zand, zwak siltig, matig fijn, donkerbruingrijs, matig humeus, heterogeen	Bouwvoor en vergraven
0,80	-1,72	Zand, zwak siltig, matig fijn, lichtbruingrijs, enkeleroestvlekken, gruis schelpmateriaal	Laagpakket van Walcheren
0,90	-1,82	Klei, zwak siltig, slap, donkergrijs, venig	Laagpakket van Walcheren
1,20	-2,12	Veen, sterk amorf, zwart, sterk veraard	Hollandveen Laagpakket: veraard
2,20	-3,12	Veen, matig amorf, bruin, vanaf 1.80 riet, op 1.70 veel hout, mos	Hollandveen Laagpakket: intact
3,00	-3,92	Klei, zwak siltig, slap, lichtblauwgrijs, riet	Laagpakket van Wormer

Mastvoetlocatie 1072

BORING	**72.B03**	X	62.668
		Y	386.413
BESCHRIJVER	F. D'hondt	Z	0,07

meter - mv	meter tov NAP	Beschrijving	Lithostratigrafie
0,30	-0,23	Zand, matig siltig, matig fijn, donkerbruingrijs, matig humeus, spoor van puinspikkels	Bouwvoor
1,40	-1,33	Zand, zwak siltig, matig fijn, lichtbruingrijs, enkele roestvlekken, bovenin bioturbatie	Laagpakket van Walcheren: geulafzettingen
2,30	-2,23	Zand, zwak siltig, matig fijn, blauwgrijs, zand - klei laminatie, veengruisbandjes	Laagpakket van Walcheren: geulafzettingen
3,00	-2,93	Zand, zwak siltig, matig fijn, blauwgrijs tot donkergrijs, gruis schelpmateriaal	Laagpakket van Walcheren: geulafzettingen

BORING	**72.B04**	X	62.656
		Y	386.401
BESCHRIJVER	F. D'hondt	Z	0,10

meter - mv	meter tov NAP	Beschrijving	Lithostratigrafie
0,35	-0,25	Zand, matig siltig, matig fijn, donkerbruingrijs, matig humeus, spoor van puinspikkels	Bouwvoor
1,50	-1,40	Zand, zwak siltig, matig fijn, lichtbruingrijs, enkele roestvlekken, gruis schelpmateriaal, bovenin bioturbatie	Laagpakket van Walcheren: geulafzettingen
2,00	-1,90	Zand, zwak siltig, matig fijn, blauwgrijs, zand - klei laminatie, veengruis	Laagpakket van Walcheren: geulafzettingen
2,50	-2,40	Zand, zwak siltig, matig fijn, donkergrijs, gruis schelpmateriaal (op 2.50 vast op zand)	Laagpakket van Walcheren: geulafzettingen

BORING	**72.B06**	X	62.656
		Y	386.420
BESCHRIJVER	F. D'hondt	Z	0,08

meter - mv	meter tov NAP	Beschrijving	Lithostratigrafie
0,40	-0,32	Zand, matig siltig, matig fijn, donkerbruingrijs, matig humeus, spoor van puinspikkels	Bouwvoor
1,10	-1,02	Zand, zwak siltig, matig fijn, lichtbruingrijs, enkele roestvlekken, gruis schelpmateriaal	Laagpakket van Walcheren: geulafzettingen
1,60	-1,52	Zand, zwak siltig, matig fijn, lichtgrijs, enkele roestvlekken, fragment schelpmateriaal	Laagpakket van Walcheren: geulafzettingen
2,00	-1,92	Zand, zwak siltig, matig fijn, blauwgrijs, enkele roestvlekken, bovenin enkele kleilaagjes (vanaf 2.00 geen residu in de guts)	Laagpakket van Walcheren

BORING	**72.B07**	X	62.668
		Y	386.433
BESCHRIJVER	F. D'hondt	Z	-0,06

meter - mv	meter tov NAP	Beschrijving	Lithostratigrafie
0,35	-0,41	Zand, matig siltig, matig fijn, donkerbruingrijs, matig humeus, spoor van puinspikkels	Bouwvoor
1,55	-1,61	Zand, zwak siltig, matig fijn, lichtbruingrijs, enkele roestvlekken, gruis schelpmateriaal	Laagpakket van Walcheren: geulafzettingen
2,50	-2,56	Zand, zwak siltig, matig fijn, blauwgrijs, zand-klei laminatie, fragment schelpmateriaal, veengruislaagjes	Laagpakket van Walcheren: geulafzettingen
3,00	-3,06	Zand, zwak siltig, matig fijn, blauwgrijs, blijft niet in de guts hangen	Laagpakket van Walcheren

Mastvoetlocatie 1073

BORING	**73.B01**	X	63.019
		Y	386.199
BESCHRIJVER	F. D'hondt	Z	-0,48

meter - mv	meter tov NAP	Beschrijving	Lithostratigrafie
0,35	-0,83	Zand, kleiig, matig fijn, donkerbruingrijs	Bouwvoor
1,20	-1,68	Klei, sterk zandig, matig slap, grijs, enkele roestvlekken, veel dunne zandlaagjes	Laagpakket van Walcheren
1,30	-1,78	Klei, zwak siltig, matig stevig, grijs, enkele roestvlekken	Laagpakket van Walcheren
1,45	-1,93	Veen, mineraalarm, veraard	Hollandveen Laagpakket: veraard
2,10	-2,58	Veen, mineraalarm, donkerbruin, mosveen	Hollandveen Laagpakket: intact
2,60	-3,08	Veen, mineraalarm, roodbruin, bosveen	Hollandveen Laagpakket: intact
2,80	-3,28	Veen, mineraalarm, bruin	Hollandveen Laagpakket: intact
3,00	-3,48	Klei, matig siltig, matig slap, blauwgrijs	Laagpakket van Wormer

BORING	**73.B03**	X	63.010
		Y	386.189
BESCHRIJVER	F. D'hondt	Z	-0,54

meter - mv	meter tov NAP	Beschrijving	Lithostratigrafie
0,35	-0,89	Zand, kleiig, matig fijn, donkerbruingrijs	Bouwvoor
1,40	-1,94	Zand, matig siltig, matig fijn, grijs, enkele roestvlekken, veel dunne kleilagen, spoor van mariene schelpen, kalkrijk, heterogeen	Moernering ?
2,30	-2,84	Klei, zwak siltig, matig slap, blauwgrijs, met zandbrokken, heterogeen	Moernering ?
2,50	-3,04	Veen, mineraalarm, matig amorf, donkerbruin, veel riet	Hollandveen Laagpakket
3,00	-3,54	Klei, zwak siltig, matig slap, blauwgrijs, weinig riet	Laagpakket van Wormer

BORING	**73.B04**	X	63.021
		Y	386.182
BESCHRIJVER	F. D'hondt	Z	-0,30

meter - mv	meter tov NAP	Beschrijving	Lithostratigrafie
0,35	-0,65	Zand, kleiig, matig fijn, donkerbruingrijs	Bouwvoor
1,30	-1,60	Zand, matig siltig, matig fijn, grijs, enkele roestvlekken, veel dunne kleilagen, kalkrijk	Laagpakket van Walcheren
2,20	-2,50	Zand, zwak siltig, matig fijn, donkerblauwgrijs, kalkrijk, fragment mariene schelpen, volledig gereduceerd	Laagpakket van Walcheren
2,25	-2,55	Klei, zwak siltig, matig slap, donkergrijs, kalkrijk	Laagpakket van Walcheren
3,60	-3,90	Veen, mineraalarm, matig amorf, donkerbruin, geëro-deerde top, mosveen, vanaf 3.20 rietveen	Hollandveen Laagpakket: geërodeerd
4,00	-4,30	Klei, matig siltig, slap, blauwgrijs, veel riet	Laagpakket van Wormer

BORING	**73.B06**	X	63.012
		Y	386.171
BESCHRIJVER	F. D'hondt	Z	-0,30

meter - mv	meter tov NAP	Beschrijving	Lithostratigrafie
0,35	-0,65	Zand, kleiig, matig fijn, donkerbruingrijs	Bouwvoor
1,30	-1,60	Zand, matig siltig, matig fijn, grijs, enkele roestvlekken, veel dunne kleilagen, kalkrijk, lijkt heterogeen	Moernering
2,10	-2,40	Klei, zwak siltig, slap, blauwgrijs, veenbrokken, hetero-geen	Moernering
2,30	-2,60	Veen, mineraalarm, matig amorf, donkerbruin - zwart, rietveen	Hollandveen Laagpakket
3,00	-3,30	Klei, zwak siltig, matig slap, blauwgrijs, rietveen	Laagpakket van Wormer

Mastvoetlocatie 1074

BORING	**74.B03**	X	63.345
		Y	385.966
BESCHRIJVER	F. D'hondt	Z	-1,22

meter - mv	meter tov NAP	Beschrijving	Lithostratigrafie
0,30	-1,52	Klei, sterk zandig, stevig, donkerbruingrijs, matig humeus	Bouwvoor
0,50	-1,72	Klei, matig zandig, matig slap, donkergrijs, heterogeen	Vergraven
0,75	-1,97	Klei, matig zandig, matig slap, grijs, enkele roestvlekken	Laagpakket van Walcheren
0,95	-2,17	Zand, kleiig, matig fijn, lichtgrijs, enkele roestvlekken	Laagpakket van Walcheren
1,20	-2,42	Veen, matig amorf, donkerbruin, zwarte laagjes (restant top)	Hollandveen Laagpakket: geërodeerd
1,95	-3,17	Veen, matig amorf, bruin, hout, vanaf 1.80 riet	Hollandveen Laagpakket
2,55	-3,77	Klei, zwak zandig, slap, lichtblauwgrijs, riet, bovenin grijsbruin	Laagpakket van Wormer

BORING	**74.B04**	X	63.334
		Y	385.951
BESCHRIJVER	F. D'hondt	Z	-1,28

meter - mv	meter tov NAP	Beschrijving	Lithostratigrafie
0,30	-1,58	Klei, sterk zandig, stevig, donkerbruingrijs, matig humeus	Bouwvoor
0,50	-1,78	Klei, matig zandig, matig slap, grijs, heterogeen	Vergraven
0,70	-1,98	Zand, kleiig, matig fijn, grijs, enkele roestvlekken	Laagpakket van Walcheren
0,95	-2,23	Zand, zwak siltig, matig fijn, lichtgrijs, spoor van roest-vlekken	Laagpakket van Walcheren
1,40	-2,68	Zand, zwak siltig, matig fijn, blauwgrijs, veenbrokken	Laagpakket van Walcheren
2,00	-3,28	Veen, matig amorf, bruin, zegge, hout, vanaf 1.80 riet	Hollandveen Laagpakket: geërodeerd
2,55	-3,83	Klei, zwak zandig, slap, lichtblauwgrijs, riet	Laagpakket van Wormer

Mastvoetlocatie 1074

BORING	**74.B06**	X	63.332
		Y	385.973
BESCHRIJVER	F. D'hondt	Z	-1,20

meter - mv	meter tov NAP	Beschrijving	Lithostratigrafie
0,30	-1,50	Klei, sterk zandig, stevig, donkerbruingrijs, matig humeus	Bouwvoor
1,00	-2,20	Zand, zwak siltig, matig fijn, lichtgrijs, enkele roestvlek-ken	Laagpakket van Walcheren
1,15	-2,35	Zand, zwak siltig, matig fijn, blauwgrijs, veenbrokken	Laagpakket van Walcheren
1,90	-3,10	Veen, matig amorf, bruin, bovenin donkerbruin (zwak geërodeerd)	Hollandveen Laagpakket: geërodeerd
2,30	-3,50	Klei, zwak zandig, slap, lichtblauwgrijs, riet	Laagpakket van Wormer

BORING	**74.B07**	X	63.354
		Y	385.981
BESCHRIJVER	F. D'hondt	Z	-1,17

meter - mv	meter tov NAP	Beschrijving	Lithostratigrafie
0,30	-1,47	Klei, sterk zandig, stevig, donkerbruingrijs, matig humeus	Bouwvoor
0,55	-1,72	Klei, zwak siltig, stevig, grijs, spoor van roestvlekken	Laagpakket van Walcheren
1,30	-2,47	Klei, matig zandig, matig stevig, lichtblauwgrijs, spoor van roestvlekken	Laagpakket van Walcheren
1,40	-2,57	Klei, matig siltig, matig slap, grijs, veenbrokken	Laagpakket van Walcheren
1,85	-3,02	Veen, matig amorf, bruin, vanaf 1.60 riet	Hollandveen Laagpakket: geërodeerd
2,75	-3,92	Klei, zwak siltig, slap, lichtblauwgrijs, riet	Laagpakket van Wormer

Mastvoetlocatie 1075

BORING	**75.B03**	X	63.659
		Y	385.755
BESCHRIJVER	F. D'hondt	Z	-0,82

meter - mv	meter tov NAP	Beschrijving	Lithostratigrafie
0,50	-1,32	Klei, zwak zandig, matig stevig, donkerbruingrijs, matig humeus	Bouwvoor
1,00	-1,82	Klei, zwak zandig, matig stevig, donkergrijs, heterogeen	Vergraven
1,20	-2,02	Klei, matig zandig, matig stevig, grijs, spoor van roestvlekken	Laagpakket van Walcheren
1,70	-2,52	Klei, matig siltig, matig slap, blauwgrijs, bovenin zandig	Laagpakket van Walcheren
2,50	-3,32	Veen, matig amorf, donkerbruin, hout, vanaf 2.20 riet	Hollandveen Laagpakket: geërodeerd
3,00	-3,82	Klei, zwak siltig, slap, blauwgrijs, riet	Laagpakket van Wormer

BORING	**75.B04**	X	63.668
		Y	385.770
BESCHRIJVER	F. D'hondt	Z	-0,87

meter - mv	meter tov NAP	Beschrijving	Lithostratigrafie
0,50	-1,37	Klei, zwak zandig, matig stevig, donkerbruingrijs, matig humeus	Bouwvoor
0,85	-1,72	Klei, matig zandig, matig stevig, donkerbruingrijs, heterogeen	Opgebracht
2,15	-3,02	Klei, sterk zandig, slap, donkergrijs, matig humeus, weinig plantenresten, kleilaagjes	Slootvulling
2,35	-3,22	Veen, matig amorf, donkerbruin, vergraven top	Hollandveen Laagpakket
2,75	-3,62	Klei, zwak siltig, slap, blauwgrijs, riet	Laagpakket van Wormer

BORING	**75.B05**	X	63.637
		Y	385.749
BESCHRIJVER	F. D'hondt	Z	-0,85

meter - mv	meter tov NAP	Beschrijving	Lithostratigrafie
0,35	-1,20	Klei, zwak zandig, matig stevig, donkerbruingrijs, matig humeus	Bouwvoor
0,60	-1,45	Zand, zwak siltig, matig fijn, lichtgrijs, spoor van roestvlekken	Laagpakket van Walcheren
1,10	-1,95	Klei, zwak siltig, slap, grijs, zandlaagjes	Laagpakket van Walcheren
1,65	-2,50	Zand, zwak siltig, matig fijn, donkergrijs, bovenin spoor van roestvlekken	Laagpakket van Walcheren
2,35	-3,20	Veen, matig amorf, donkerbruin, hout, riet	Hollandveen Laagpakket: geërodeerd
2,75	-3,60	Klei, zwak siltig, slap, blauwgrijs, riet	Laagpakket van Wormer

BORING	**75.B06**	X	63.646
		Y	385.763
BESCHRIJVER	F. D'hondt	Z	-0,85

meter - mv	meter tov NAP	Beschrijving	Lithostratigrafie
0,40	-1,25	Klei, zwak zandig, matig stevig, donkerbruingrijs, matig humeus	Bouwvoor
0,65	-1,50	Zand, zwak siltig, matig fijn, lichtgrijs, spoor van roest-vlekken	Laagpakket van Walcheren
1,10	-1,95	Klei, zwak siltig, slap, grijs, zandlaagjes	Laagpakket van Walcheren
1,25	-2,10	Zand, zwak siltig, matig fijn, grijs, enkele roestvlekken	Laagpakket van Walcheren
1,70	-2,55	Zand, zwak siltig, matig fijn, blauwgrijs	Laagpakket van Walcheren
2,35	-3,20	Veen, donkerbruin, matig amorf, hout, riet	Hollandveen Laagpakket: geërodeerd
3,00	-3,85	Klei, zwak siltig, slap, blauwgrijs, riet	Laagpakket van Wormer

BUREAUONDERZOEK ARCHEOLOGIE
HOOGSPANNINGSVERBINDING ZUID-WEST 380 KV
DEELTRACÉ 2: WILLEM ANNA POLDER, KRUININGEN, RILLAND WEST, RILLAND OOST (GEMEENTEN KAPELLE EN REIMERSWAAL)

TENNET TSO BV

8 februari 2013
076922603:0.2 - Concept
B02032.000500.0100

ARCADIS

Inhoud

Samenvatting **5**

1 Inleiding **7**
1.1 Aanleiding voor het onderzoek 7
1.2 Plangebied en onderzoeksgebied 8
1.2.1 Algemeen 8
1.2.2 Afbakening plangebieden 8
1.3 Huidige situatie plangebied 12
1.4 Toekomstige situatie plangebied 13
1.4.1 Planvorming 13
1.4.2 Aard en diepte van de bodemingrepen 14
1.4.3 Verwachte effecten 14
1.5 Doel van het bureauonderzoek 14
1.6 Werkwijze 15
1.7 Juridisch- en beleidskader 15

2 Landschap **17**
2.1 Inleiding 17
2.2 Landschapsgenese 17
2.3 geomorfologie 19
2.3.1 Willem Anna Polder 19
2.3.2 Kruiningen 20
2.3.3 Rilland West en Oost 20
2.4 Bodem en geologie 20
2.4.1 Willem Anna Polder 20
2.4.2 Kruiningen 21
2.4.3 Rilland West en Oost 22

3 Archeologie **23**
3.1 Inleiding 23
3.2 Archeologische status van de plangebieden 23
3.3 Archeologische status van de onderzoeksgebieden 23
3.3.1 Willem Anna Polder 24
3.3.2 Kruiningen 25
3.3.3 Rilland West en Oost 26

4 Historische situatie en bodemverstoringen **27**
4.1 Historische situatie 27
4.1.1 Willem Anna Polder 27
4.1.2 Kruiningen 29
4.1.3 Rilland West en Oost 31
4.2 Bodemverstoringen 33
4.2.1 Willem Anna Polder 33
4.2.2 Kruiningen 33

4.2.3 Rilland West en Oost ... 34

5 Gespecificeerde archeologische verwachting ... 35
5.1 Stratigrafische positie en diepteligging ... 35
5.1.1 Willem Anna Polder ... 35
5.1.2 Kruiningen ... 35
5.1.3 Rilland West en Oost ... 35
5.2 Gaafheid en conservering ... 36
5.2.1 Willem Anna Polder ... 36
5.2.2 Kruiningen ... 36
5.2.3 Rilland West en Oost ... 36
5.3 Archeologische verwachting ... 36
5.4 Complextypen en prospectiekenmerken ... 37

6 Conclusies en aanbevelingen ... 39
6.1 Conclusies ... 39
6.2 Advies ... 40

Bronnen ... 41

Bijlage 1 ... 43
Bijlage 1.1 Nieuwe situatie, Willem Anna Polder ... 43
Bijlage 1.2 Nieuwe situatie, Kruiningen ... 43
Bijlage 1.3 Nieuwe situatie, Rilland West ... 43
Bijlage 1.4 Nieuwe situatie, Rilland Oost ... 43

Bijlage 2 ... 45
Bijlage 2.1 Maatregelenkaarten, Willem Anna Polder ... 45
Bijlage 2.2 Maatregelenkaarten, Kruiningen ... 45
Bijlage 2.3 Maatregelenkaarten, Rilland Oost en West ... 45

Bijlage 3 ... 47
Bijlage 3.1 Geomorfologische kaart, overzicht ... 47
Bijlage 3.2 Geomorfologische kaart, Willem Anna Polder ... 47
Bijlage 3.3 Geomorfologische kaart, Kruiningen ... 47
Bijlage 3.4 Geomorfologische kaart, Rilland West en Oost ... 47

Bijlage 4 ... 49
Bijlage 4.1 Actueel Hoogtebestand Nederland 2 (AHN2), overzicht ... 49
Bijlage 4.2 Actueel Hoogtebestand Nederland 2 (AHN2), Willem Anna Polder (WAP) ... 49
Bijlage 4.3 Actueel Hoogtebestand Nederland 2 (AHN2), Kruiningen ... 49
Bijlage 4.4 Actueel Hoogtebestand Nederland 2 (AHN2), Rilland ... 49

Bijlage 5 ... 51
Bijlage 5.1 Bodemkaart, overzicht ... 51
Bijlage 5.2 Bodemkaart, Willem Anna Polder ... 51
Bijlage 5.3 Bodemkaart, Kruiningen ... 51
Bijlage 5.4 Bodemkaart, Rilland West en Oost ... 51

Bijlage 6 ..... **53**
Bijlage 6.1 Bekende archeologische waarden en verwachting, overzicht 53
Bijlage 6.2 Bekende archeologische waarden en verwachting, Willem Anna Polder 53
Bijlage 6.3 Bekende archeologische waarden en verwachting, Kruiningen 53
Bijlage 6.4 Bekende archeologische waarden en verwachting, Rilland West en Oost 53

Colofon **55**

Afbeelding 1: Ligging van de vier deelgebieden (rood). 7
Afbeelding 2: Ligging van het plangebied Willem Anna Polder (rood). 9
Afbeelding 3: Ligging van het plangebied Kruiningen (rood). 10
Afbeelding 4: Ligging van de plangebieden Rilland West en Oost (rood). 11
Afbeelding 5: Huidige situatie plangebied Willem Anna Polder. 12
Afbeelding 6: Huidige situatie plangebied Kruiningen. 13
Afbeelding 7: Huidige situatie plangebied Rilland. 13
Afbeelding 8: Profiel kabelbed plangebied Rilland Oost. 14
Afbeelding 9: Schematische weergave van de AMZ-cyclus. 16
Afbeelding 10: Uitsnede van de geologische kaart van Beveland (plangebied Willem Anna Polder in rood). 21
Afbeelding 11: Plangebied Willem Anna Polder (in rood) op de kaart van Nicolaas Visser 1680. 27
Afbeelding 12: Plangebied Willem Anna Polder (in rood) op de Topografische Militaire Kaart 1911. 28
Afbeelding 13: Plangebied Willem Anna Polder (in rood) op de Topografische Kaart 1984. 29
Afbeelding 14: Plangebied Kruiningen (in rood) op de kaart van Nicolaas Visser 1680. 30
Afbeelding 15: Plangebied Kruiningen (in rood) op de Topografisch Militaire Kaart van 1910. 30
Afbeelding 16: Plangebied Kruiningen (in rood) op de Topografische Kaart 1980. 31
Afbeelding 17: Plangebied Rilland West en Oost (in rood) op de kaart van Nicolaas Visser 1680. 32
Afbeelding 18: Plangebied Rilland West en Oost (in rood) op de veldminuut De Man 1856. 32
Afbeelding 19: Plangebied Rilland West en Oost (in rood) op de Topografische Militaire Kaart 1910. 33

Tabel 1: Objectgegevens onderzoek. 12
Tabel 2: Toekomstig gebruik. 14
Tabel 3: Landschap. 22
Tabel 4: Archeologische waarden. 26
Tabel 5: Huidig gebruik, historische situatie en bodemverstoringen. 34
Tabel 6: Gespecificeerde archeologische verwachting. 37

Samenvatting

TenneT TSO B.V. is voornemens de nieuwe hoogspanningsverbinding Zuid-West 380 kV aan te leggen. Het tracé van deze verbinding loopt van Borssele (Zeeland) tot Tilburg (Noord-Brabant). Bij de aanleg van de verbinding zal grondverzet plaatsvinden ten behoeve van de ontgraving van kabelbedden, waardoor de bodem en daarmee eventueel aanwezige archeologische resten in het plangebied kunnen worden verstoord. Op grond van gemeentelijk archeologiebeleid is in het kader van de ruimtelijke procedure een archeologisch vooronderzoek vereist.

Naar aanleiding van het vooronderzoek zijn de volgende conclusies te trekken.

1. Op het Pleistocene dekzand (Formatie van Boxtel) is bewoning mogelijk geweest tijdens het Paleolithicum en Mesolithicum. Bewoningssporen uit het Neolithicum tot en met de Bronstijd kunnen voorkomen op de Afzettingen van Calais (Wormer Laagpakket). Sporen van bewoning uit de IJzertijd en Romeinse Tijd kunnen worden aangetroffen in de top van het Hollandveen. Op de Afzettingen van Duinkerke II en III (Walcheren Laagpakket) kunnen sporen van bewoning uit de Middeleeuwen en Nieuwe Tijd worden aangetroffen, op de verlande kreekruggen die na de Romeinse Tijd zijn gevormd.
2. De top van de Afzettingen van Duinkerke bevindt zich in alle plangebieden onder de bouwvoor. Ook de top van het Pleistocene dekzand is in elk plangebied aanwezig, hetzij wel op grote diepte (meer dan 7 m –NAP). Afzettingen van Calais en het Hollandveen zijn niet in alle plangebieden aanwezig.
3. De geplande ontgravingsdiepte van 1,8 m –Mv maakt dat de Afzettingen van Duinkerke (Walcheren Laagpakket) het enige relevante archeologische niveau is voor de verwachting in elk gebied – en daarmee de bewoningsmogelijkheden in de Middeleeuwen en Nieuwe Tijd.
   Voor deze periode kan de archeologische verwachting per plangebied dan als volgt worden gesteld:
   a) Willem Anna Polder : middelhoog
   b) Kruiningen : hoog
   c) Rilland West : laag
   d) Rilland Oost : laag
4. Gezien de (gedeeltelijke) ligging op een getij-inversierug of -oeverwal geldt het risico van de ontgraving voor eventueel aanwezige archeologische resten alleen voor de plangebieden Willem Anna Polder en Kruiningen. De plangebieden Rilland West en Oost zullen tot de bedijking in 1856 te nat voor bewoning zijn geweest in Middeleeuwen en Nieuwe Tijd.

Concluderend heeft het onderzoek aangetoond, dat de geplande ontgraving van de kabelbedden tot een diepte van 1,8 m –Mv in de plangebieden Willem Anna Polder en Kruiningen mogelijk archeologische resten uit de Middeleeuwen en Nieuwe Tijd kan verstoren. Het is nog niet duidelijk in hoeverre en tot welke diepte er historische of recente verstoringen hebben plaatsgevonden.

Advies en aanbevelingen

Op basis van de resultaten van het bureauonderzoek adviseren wij om in de plangebieden Willem Anna Polder en Kruiningen archeologisch vervolgonderzoek uit te voeren binnen de daadwerkelijke verstoringsbreedte van de geplande kabelbedden, om de specifieke archeologische verwachting te toetsen en de mate van intactheid van de bodem te bepalen. Het verdient de aanbeveling om dit vervolgonderzoek uit te voeren in de vorm van een verkennend/karterend booronderzoek en een oppervlaktekartering. Voor de plangebieden Rilland West en Oost zijn op basis van de resultaten van dit bureauonderzoek geen redenen om vervolgonderzoek te adviseren. Dit advies dient door de initiatiefnemer te worden voorgelegd aan het Bevoegd Gezag, in dit geval de Gemeente Kapelle en de Gemeente Reimerswaal. Het Bevoegd Gezag zal het advies beoordelen en kan van het door ARCADIS gegeven advies afwijken.

1 Inleiding

1.1 AANLEIDING VOOR HET ONDERZOEK

TenneT TSO B.V. is voornemens de nieuwe hoogspanningsverbinding Zuid-West 380 kV aan te leggen. Het tracé van deze verbinding loopt van Borssele (Zeeland) tot Tilburg (Noord-Brabant). Bij de aanleg van de verbinding zal grondverzet plaatsvinden ten behoeve van de ontgraving van kabelbedden, waardoor de bodem en daarmee eventueel aanwezige archeologische resten in het plangebied kunnen worden verstoord. Op grond van gemeentelijk archeologiebeleid is in het kader van de ruimtelijke procedure een archeologisch vooronderzoek vereist.

Het hoofdtracé is opgesplitst in vijf deeltracés; voor vier van die deeltracés dient een archeologisch bureauonderzoek te worden opgesteld. In opdracht van TenneT TSO B.V. heeft ARCADIS Nederland B.V. dit specifieke bureauonderzoek opgesteld voor de te ontgraven kabelbedden in deeltracé 2. Dit deeltracé is verdeeld in de plangebieden Willem Anna Polder, Kruiningen, Rilland West en Rilland Oost.
Deze plangebieden liggen in de gemeenten Kapelle en Reimerswaal (zie overzicht Afbeelding 1).

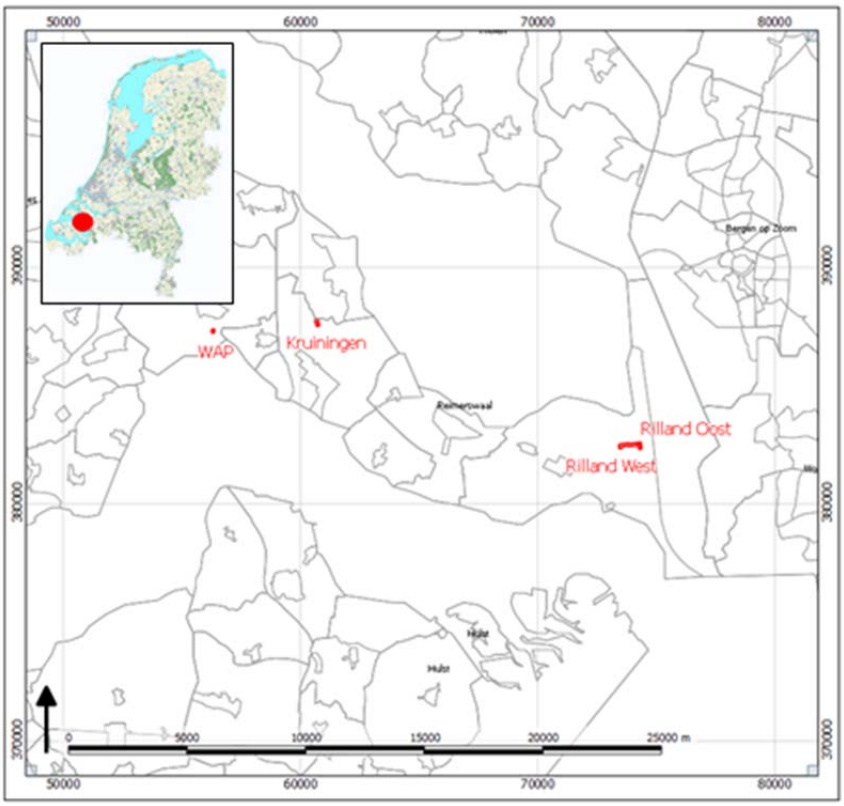

Afbeelding 1: Ligging van de vier deelgebieden (rood).

Het onderzoek is uitgevoerd in overeenstemming met de eisen van de Kwaliteitsnorm Nederlandse Archeologie (KNA), versie 3.2.

Bij de bouwwerkzaamheden kunnen mogelijk archeologische waarden verstoord worden.
Het bureauonderzoek heeft als doel inzicht te verschaffen in de archeologische waarden die zich in het plangebied kunnen bevinden.

1.2 PLANGEBIED EN ONDERZOEKSGEBIED

1.2.1 ALGEMEEN

Binnen het archeologisch bureauonderzoek wordt onderscheid gemaakt in het plangebied en het onderzoeksgebied. Het plangebied is het gebied waarin de geplande bodemingrepen zullen plaatsvinden en waar de ruimtelijke procedure betrekking op heeft. Om de archeologische verwachting van het plangebied te kunnen specificeren is bij het bureauonderzoek een gebied met een straal van circa 1.000 m rond elk plangebied betrokken. Dit onderzoeksgebied sluit zowel bodemkundig, als voor wat betreft geomorfologie, archeologie en cultuurhistorie aan bij de verwachte situatie in het plangebied, zodat op een verantwoorde manier uitspraken kunnen worden gedaan over de landschapsgenese en bewoningsgeschiedenis van het plangebied. Bovendien is voor wat betreft de landschapsgenese ook informatie op het niveau van de archeoregio bij het onderzoek betrokken, in dit geval het Zeeuws kleigebied.

1.2.2 AFBAKENING PLANGEBIEDEN

In dit bureauonderzoek worden vier plangebieden onderscheiden, waarvan twee naast elkaar liggen: Willem Anna Polder, Kruiningen, Rilland West en Rilland Oost. De plangebieden zijn gedefinieerd als kabelbedden met daaromheen een buffer van 50 m en hebben een gezamenlijke oppervlakte van circa 18,6 ha. Het oppervlak waar daadwerkelijk bodemingrepen zullen plaatsvinden is kleiner en betreft enkel de kabelbedden (zie 1.4.2).

- Plangebied Willem Anna Polder (code 1.WAP.1.1) betreft een nieuwe aansluiting op het bestaande 150 kV station Willem Anna Polder. Het plangebied is gelegen in de gelijknamige Willem Anna Polder, ten zuiden van de Witte Weelweg, die parallel met de A58 loopt. Inclusief 50 m buffer is dit plangebied circa 1,5 ha groot (zie Afbeelding 2).
- Plangebied Kruiningen (code 2.KRN.2.1) betreft een nieuwe aansluiting op het bestaande 150 kV station Kruiningen. Het plangebied is gelegen ten noordwesten van de kruising tussen de spoorlijn en de Zanddijk (N673). Inclusief 50 m buffer is dit plangebied circa 3,6 ha groot (zie Afbeelding 3).
- Plangebied Rilland West (code 3.RLD-w.3.1) betreft een nieuwe aansluiting op een nieuw te bouwen station nabij het bestaande 150 kV station Kreekrak-Rilland. Het plangebied is gelegen ten zuiden van de A58. Inclusief 50 m buffer is dit plangebied circa 10 ha groot (zie Afbeelding 4).
- Plangebied Rilland Oost (code 4.RLD-o.4.1) betreft een nieuwe aansluiting op het bestaande 150 kV station Kreekrak-Rilland. Het plangebied is gelegen ten zuiden van de A58 en ten westen van de kruising met de Westelijke Spuikanaalweg. Inclusief 50 m buffer is dit plangebied circa 3,5 ha groot (zie Afbeelding 4).

Afbeelding 2: Ligging van het plangebied Willem Anna Polder (rood).

Afbeelding 3: Ligging van het plangebied Kruiningen (rood).

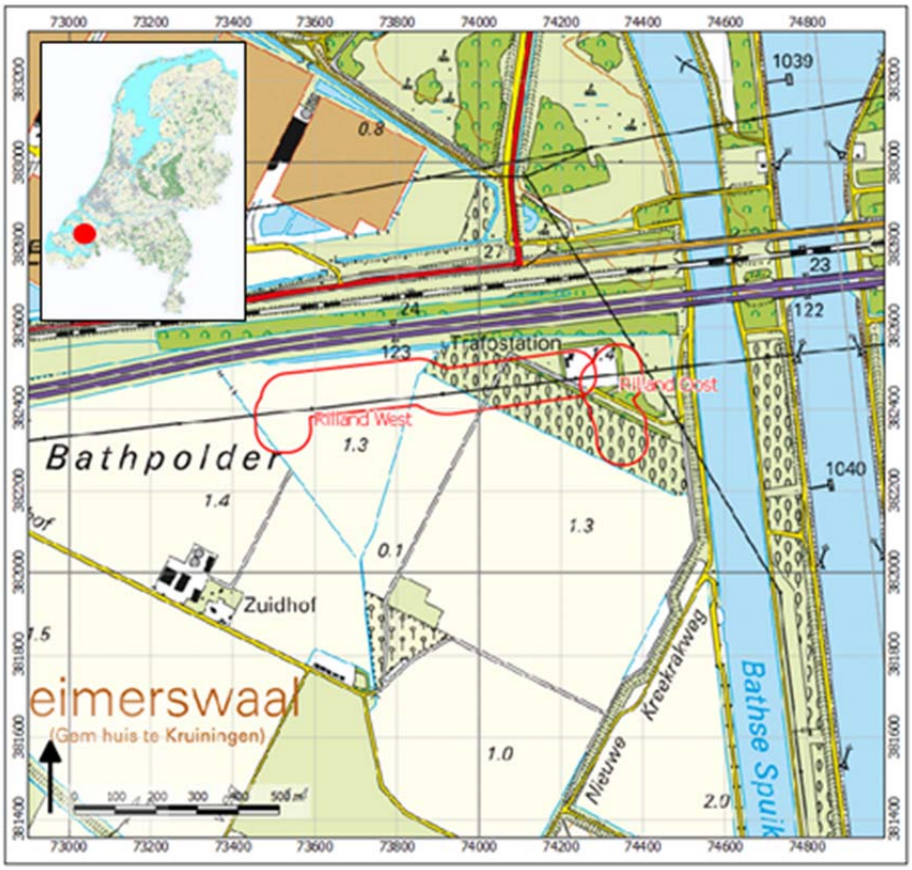

Afbeelding 4: Ligging van de plangebieden Rilland West en Oost (rood).

Objectgegevens onderzoek	Willem Anna Polder	Kruiningen	Rilland West	Rilland Oost
ARCADIS Projectnummer	B02032.000500			
Projectnaam	Hoogspanningsverbinding Zuid-West 380 kV			
Toponiem	Willem Anna Polder	Kruiningen	Rilland West	Rilland Oost
Plaats	Biezelinge	Kruiningen	Rilland	Rilland
Gemeente	Kapelle	Reimerswaal	Reimerswaal	Reimerswaal
Provincie	Zeeland	Zeeland	Zeeland	Zeeland
Kaartblad	48F	49C	49D	49D
Centrumcoördinaat	56.319/387.252	60.713/387.611	73.835/382.452	74.336/382.411
Oppervlakte plangebied	Circa 15.000 m^2	Circa 36.000 m^2	Circa 100.000 m^2	Circa 35.000 m^2
Onderzoeksmelding Archis2	55.064	55.065	55.066	55.066
Uitvoerder	ARCADIS Nederland BV			
Contactpersoon	T. Vanderhoeven Timo.vanderhoeven@arcadis.nl			
Opdrachtgever	Tennet TSO BV			
Bevoegd Gezag	Kapelle	Reimerswaal	Reimerswaal	Reimerswaal
Uitvoeringsperiode onderzoek	Januari 2013			
Beheerder en plaats documentatie	ARCADIS Nederland BV, locatie ‘s-Hertogenbosch			

Tabel 1: Objectgegevens onderzoek.

1.3 HUIDIGE SITUATIE PLANGEBIED

Alle plangebieden zijn momenteel in gebruik als akkerland en zijn niet bebouwd, zoals te zien is op onderstaande luchtfoto’s (bron: Bing Maps). De plangebieden bij Rilland worden tevens doorsneden door een strook bos. Elk plangebied grenst aan een 150 kV-hoogspanningsstation. De afbakening van elk plangebied is reeds beschreven in 1.2.2.

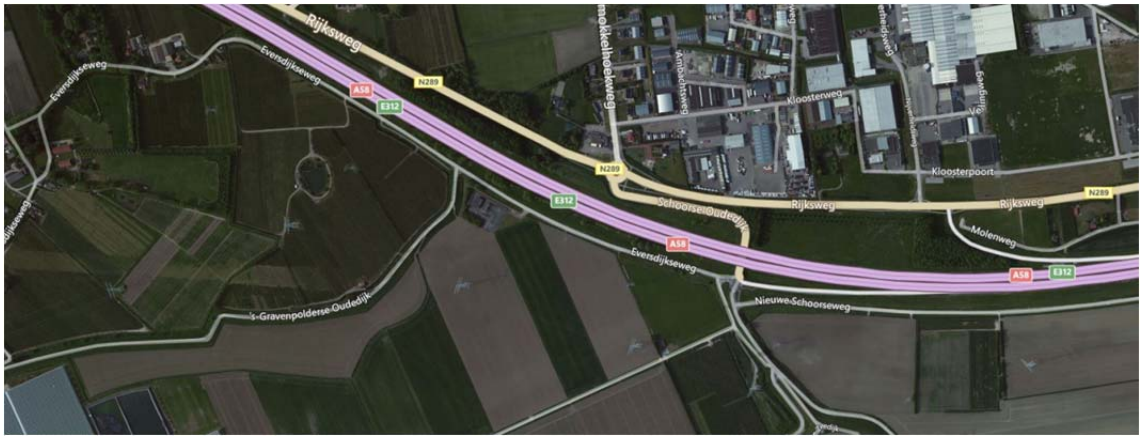

Afbeelding 5: Huidige situatie plangebied Willem Anna Polder.

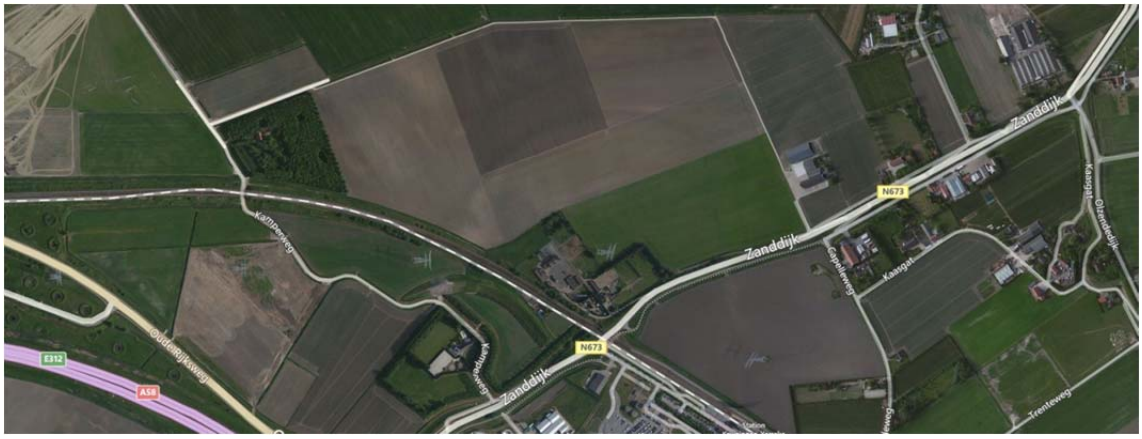

Afbeelding 6: Huidige situatie plangebied Kruiningen.

Afbeelding 7: Huidige situatie plangebied Rilland.

1.4 TOEKOMSTIGE SITUATIE PLANGEBIED

1.4.1 PLANVORMING

Het project Zuid-West 380 kV omvat het bouwen van een bovengrondse, 2-circuits 380 kV-hoogspanningsverbinding tussen Borssele en de landelijke 380 kV-ring bij Tilburg, plus de daarvoor noodzakelijke aanpassingen aan de bestaande hoogspanningsverbindingen en -stations. Het beginpunt van de nieuwe verbinding is het bestaande 380 kV-hoogspanningsstation bij Borssele. Het eindpunt ligt bij Tilburg, waar als onderdeel van de voorgenomen activiteit een nieuw 380 kV-hoogspanningsstation zal worden gebouwd. In het nieuwe station bij Tilburg wordt de nieuwe verbinding aan het landelijke net gekoppeld (De Jong en Evelein, 2012). De nieuwe 380 kV-verbinding moet op meerdere locaties in het tracé verbonden worden met reeds bestaande 150 kV-hoogspanningsstations. In deeltracé 2 gaat het om de stations Willem Anna Polder, Kruiningen en Kreekrak-Rilland. Bij Rilland zal ook een nieuw hoogspanningsstation worden gebouwd, dat eveneens aangesloten zal worden op de nieuwe 380 kV-verbinding. De aansluitingen zullen worden gevormd met behulp van ondergrond aan te leggen kabels. De nieuwe situaties zijn weergegeven op bijlagen 1.1 t/m 1.4.

1.4.2 AARD EN DIEPTE VAN DE BODEMINGREPEN

Voor het aanleggen van de ondergrondse kabelaansluitingen moeten kabelbedden worden gegraven. Deze bedden zijn gedefinieerd op basis van de geprojecteerde ligging van de kabels, met aan weerszijden 3 meter vrije ruimte. De breedte van de te ontgraven bedden – en daarmee de verstoringsbreedte – varieert per plangebied: Willem Anna Polder 8,5 meter, Kruiningen 9,4 meter, Rilland West 11 meter en Rilland Oost 11 meter. De ontgravingdiepte van de kabelbedden bedraagt in alle plangebieden 1,8 m –Mv.

Ter illustratie van bovenstaande is op Afbeelding 8 de doorsnede afgebeeld van het te graven kabelbed in plangebied Rilland Oost. Aan weerszijden van de bedden worden waar mogelijk werkstroken van 15 tot 25 meter aangehouden.

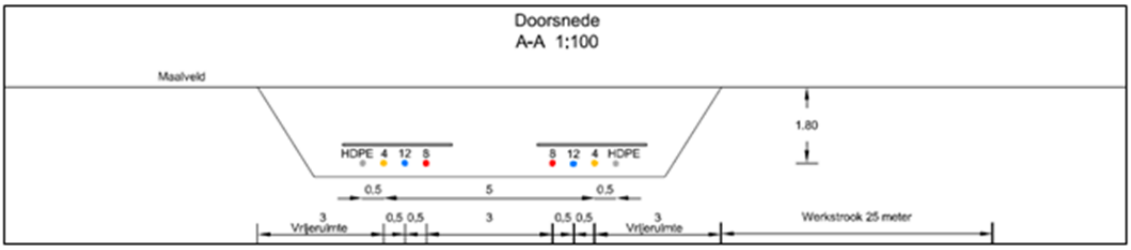

Afbeelding 8: Profiel kabelbed plangebied Rilland Oost.

1.4.3 VERWACHTE EFFECTEN

De ontgraving van de kabelbedden, over een variabele breedte per plangebied van 8,5 meter tot 11 meter en tot een diepte van circa 1,8 m –Mv, kan eventueel aanwezige archeologische resten ter plaatse verstoren. Binnen de werkstroken zal niet worden ontgraven.

Kader	Ruimtelijke procedure
Plan	Aanleg kabels t.b.v. aansluiting bestaande hoogspanningsstations op nieuwe verbinding
Bodemingrepen	Graafwerkzaamheden
Verwachte diepte	1,80 -Mv

Tabel 2: Toekomstig gebruik.

1.5 DOEL VAN HET BUREAUONDERZOEK

Het doel van het archeologisch bureauonderzoek is het specificeren van de archeologische verwachting, dat wil zeggen het aan de hand van beschikbare en nieuwe informatie over de archeologie, cultuurhistorie, geomorfologie, bodemkunde en grondgebruik, bepalen van de kans dat binnen het plangebied archeologische resten kunnen voorkomen.

Het resultaat van het archeologisch bureauonderzoek is dit rapport, met een conclusie omtrent het risico dat eventueel aanwezige archeologische waarden in het plangebied worden verstoord als gevolg van de voorgenomen plannen. Op basis van dit rapport kan het bevoegd gezag een beslissing nemen in het kader van de ruimtelijke procedure.

1.6 WERKWIJZE

De werkzaamheden bestaan uit een bureaustudie. Het bureauonderzoek is uitgevoerd conform protocol 4002 van de Kwaliteitsnorm Nederlandse Archeologie, versie 3.2 (KNA 3.2). Deze richt zich op archeologische bronnen als de Indicatieve Kaart van Archeologische Waarden (IKAW), de Archeologische Monumentenkaart (AMK), de archeologische database Archis2 van de Rijksdienst voor het Culturele Erfgoed (RCE), het provinciaal beleid en het gemeentelijk beleid. Ook wordt gebruik gemaakt van de topografische kaart, de geomorfologische kaart, de hoogtekaart (AHN) en de bodemkaart. Ten slotte is historisch kaartmateriaal gebruikt om de bestemming van het plangebied in het verleden vast te stellen.

1.7 JURIDISCH- EN BELEIDSKADER

Monumentenwet 1988, Verdrag van Malta 1992, Wet op de Archeologische Monumentenzorg 2007 (WAMz), Kwaliteitsnorm Nederlandse Archeologie (KNA versie 3.2), nieuwe Wet op de ruimtelijke ordening (nWRO), Wet algemene bepalingen omgevingsrecht (Wabo), provinciaal beleid, gemeentelijk beleid.

In 1992 heeft Nederland het Europees Verdrag inzake de bescherming van het archeologisch erfgoed ondertekend; ook wel het Verdrag van Malta of Valletta genoemd, naar het eiland en de plaats waar het is ondertekend. Het Verdrag is in 1998 geratificeerd en op 1 september 2007 via de Wet op de Archeologische Monumentenzorg (Wamz) geïmplementeerd. De Wamz is een wijzigingswet en omvat een wijziging van de Monumentenwet 1988, de Wet Milieubeheer en de Ontgrondingenwet. Vanuit de Wet op de ruimtelijke ordening (Wro) bestaat sindsdien een verplichting om bij de voorbereiding van bestemmingsplannen alle ter zake doende belangen mee te wegen. In feite is de Wamz een concrete invulling van deze verplichting en een verbreding van de zorgplicht voor archeologische waarden in het milieubeheer.

Het archeologiebeleid van de gemeenten Kapelle en Reimerswaal is per gemeente verwoord in twee afzonderlijke beleidsnota's en maatregelenkaarten. Het beleid en de kaarten van beide gemeenten zijn van gelijke opzet, door het gezamenlijke opdrachtgeverschap van de Vereniging Zeeuwse Gemeenten (Alkemade e.a. 2011a en 2011b, Brugman e.a. 2011a en 2011b).
De vier maatregelenkaarten die bij elk beleid horen vertegenwoordigen elk een landschapszone met een specifieke en onderscheidende geologische ontwikkeling en bewoningsgeschiedenis (kaartlaag 1 'Walcheren', kaartlaag 2 'Hollandveen', kaartlaag 3 'Wormer' en kaartlaag 4 'Pleistoceen').

- Plangebied Willem Anna Polder (gemeente Kapelle) heeft op kaartlaag 1-3 een lage tot gematigde verwachting (categorie 6 en 5) en op kaartlaag 4 geen verwachting (categorie 8). Omdat de ingrepen in dit plangebied dieper reiken dan 40 cm en groter zijn dan 250 m2 geldt een archeologische onderzoeksplicht.
- Plangebied Kruiningen (gemeente Reimerswaal) heeft op kaartlaag 1 een hoge verwachting (categorie 5) en op kaartlagen 2-4 geen verwachting (categorie 8). Omdat de ingrepen in dit plangebied dieper reiken dan 40 cm en groter zijn dan 500 m2 geldt een archeologische onderzoeksplicht.
- Plangebied Rilland West (gemeente Reimerswaal) heeft op kaartlaag 1-3 een gematigde tot hoge verwachting (categorie 5 en 4) en op kaartlaag 4 een gematigde verwachting (categorie 5). Omdat de ingrepen in dit plangebied dieper reiken dan 40 cm en groter zijn dan 250 m2 geldt een archeologische onderzoeksplicht.
- Plangebied Rilland Oost (gemeente Reimerswaal) heeft op kaartlaag 1-3 een hoge verwachting (categorie 4) en op kaartlaag 4 een gematigde verwachting (categorie 5). Omdat de ingrepen in dit plangebied dieper reiken dan 40 cm en groter zijn dan 250 m2 geldt een archeologische onderzoeksplicht.

Op bijlagen 2.1 t/m 2.3 is de ligging van de plangebieden per kaartlaag van de betreffende gemeentelijke maatregelenkaart weergegeven.

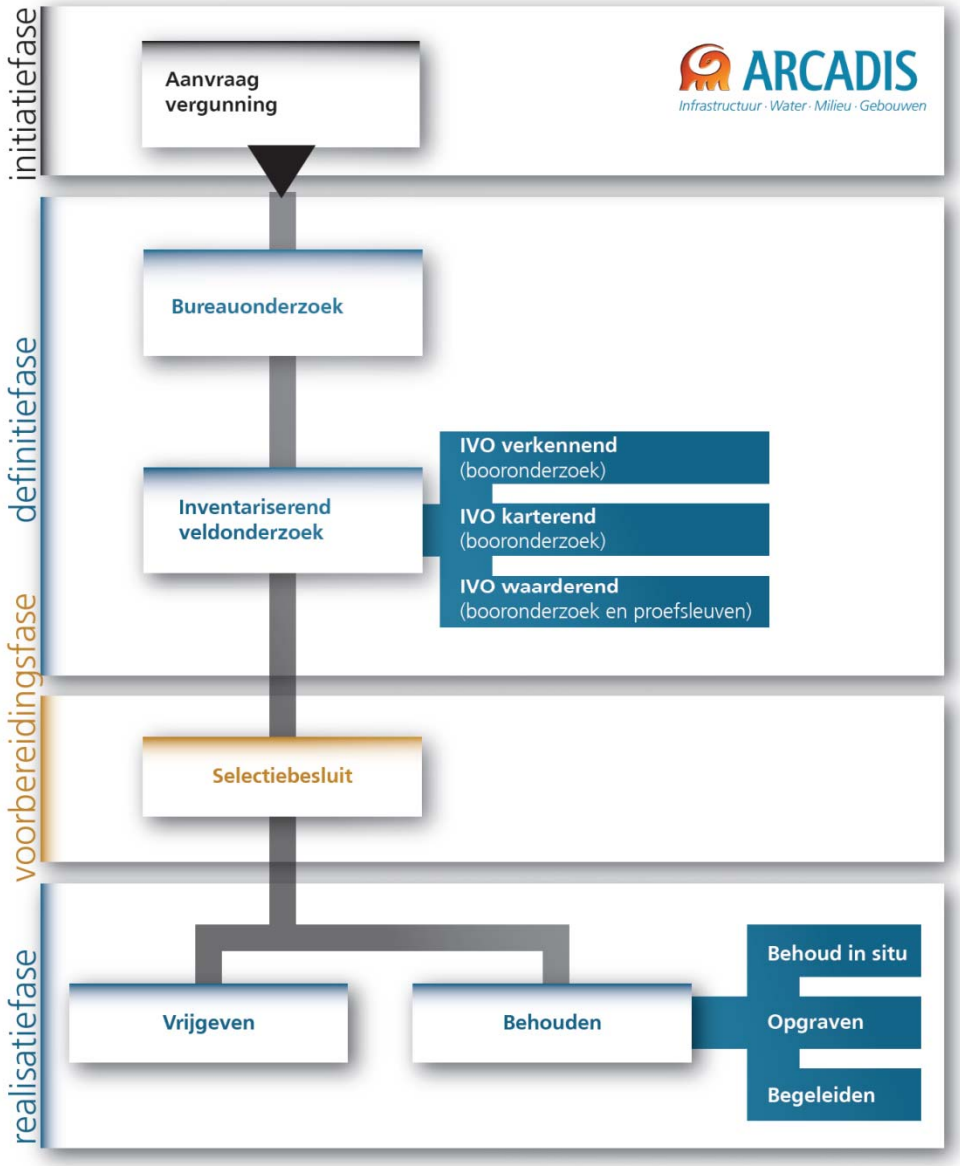

Afbeelding 9: Schematische weergave van de AMZ-cyclus.

2 Landschap

2.1 INLEIDING

Het menselijke doen en laten werd en wordt in grote mate bepaald door de landschappelijke omgeving, en de mogelijkheden die daardoor geboden worden. De geologische, geomorfologische en bodemkundige situaties zijn daarom van belang voor een archeologisch onderzoek.

2.2 LANDSCHAPSGENESE

Zeeland maakt deel uit van het zuidwestelijk zeekleigebied, een geologisch deelgebied dat ook de Zuid-Hollandse eilanden, Noordwest-Brabant, de Biesbosch en het Westland omvat (Berendsen 2005). De geologische ontwikkeling van dit gebied is in hoge mate bepaald door de invloed van de getijden, in combinatie met de relatieve zeespiegelstijging. De getijdewerking van de zeearmen in het zuidwestelijk zeekleigebied is groot, als gevolg van stuwing van de vloedstroom. Daarnaast hebben de mondingen van de Schelde, Rijn, Maas en Waal grote invloed gehad op de vorming van het landschap.

De Pleistocene afzettingen in het zuidwestelijk zeekleigebied, in de vorm van dekzandafzettingen (Boxtel Formatie) of rivierafzettingen (Kreftenheye Formatie) uit de laatste ijstijd. Dekzandafzettingen liggen in Zeeuws-Vlaanderen nog aan het oppervlak en hierdoor gevormde ruggen zorgen voor hoogteverschillen met het omringend landschap van circa 1-2 m (Berendsen, 2005).

De Holocene afzettingen in het zuidwestelijk zeekleigebied behoren tot de Naaldwijk Formatie en worden volgens de huidige lithostratigrafische indeling van Mulder e.a. (2003) verdeeld in het Wormer Laagpakket (de onderste mariene afzettingen) en het Walcheren Laagpakket (de bovenste mariene afzettingen). Deze laagpakketten zijn gevormd door de afzetting van zeeklei door de eeuwen heen. Vertand met de Naaldwijk Formatie komen ook veenafzettingen van de Nieuwkoop Formatie voor in het zuidwestelijk zeekleigebied. Het veen dat op de Pleistocene afzettingen wordt aangetroffen wordt gerekend tot de Basisveen Laag. De veenlagen tussen de Holocene mariene afzettingen behoren tot het Hollandveen Laagpakket (Berendsen, 2005).

De oudste mariene afzettingen, die van het Wormer Laagpakket, zijn tot in het begin van het Subboreaal (circa 7500 – 4500 jaar voor Chr.) gevormd, bij een min of meer open kust: het zuidwestelijk zeekleigebied had in deze periode het uiterlijk van een wadden- en kwelderlandschap, een getijdengebied dat werd doorsneden door getijdengeulen. Omdat de zeespiegel sneller steeg dan het land vonden er continu overstromingen plaats. Volgens Berendsen (2005) ligt de top van het Wormer Laagpakket nu in de 21ste eeuw op circa 4 m –NAP, wat betekent dat deze afzettingen niet voorkomen daar waar de Pleistocene afzettingen hoger liggen dan dat. Sporen voor bewoning uit het begin van deze periode zijn gevonden op die plaatsen waar een dik Holoceen afzettingspakket ontbreekt, langs de Belgische grens en op de Brabantse Zoom.

Mogelijk heeft er in de gebieden met mariene afzettingen ook bewoning plaatsgevonden, maar resten hiervan zijn moeilijk op te sporen vanwege het dikke sedimentdek van Holocene afzettingen (Brugman e.a., 2011a; Vos & Van Heeringen, 1997).

De overstromingen vanuit zee gingen in Zeeland door tot circa 4400 voor Chr., toen de ophoging van het land door afzetting van zand en klei ongeveer gelijk op begon te lopen met de stijging van de zeespiegel. De kustlijn begon zich in het westen te sluiten door het ontstaan van strandwallen, wat een sterke uitbreiding van het veen achter deze barrière tot gevolg had. Tussen 3500 en 2500 voor Chr. nam de zeespiegelstijging af, maar de zee bleef zand en klei afzetten en nu meer dan nodig was om te compenseren voor de stijging van de zeespiegel. Door deze toename van sedimentatie bouwden de strandwallen aan de kust zich westwaarts uit en begon de verlanding en vervening van het achterland (Vos e.a., 2011). De getijdengeulen verlandden door de sterke afname van de getijdenstroming.
De weerstand tegen het tij in Zeeland werd hoger en als gevolg verminderde de getijslag – en dus de overstromingen. Lagere hoogwaterstanden waren het gevolg, net als een verslechtering van de afwatering in het achterland door het verlandden van de geulen. Hierdoor veranderde het getijdengebied langzamerhand in een kustmoeras. Uit deze periode – het Neolithicum (circa 5300-2000 voor Chr.) – zijn vondsten gedaan op het strand van Walcheren, verspoeld door de zee en mogelijk afkomstig van een strandwal voor de kust (Brugman e.a., 2011a; Vos & Van Heeringen, 1997).

De veenvorming ging van circa 3100 tot 750 voor Chr. onverminderd door. Hoewel er artefacten zijn gevonden in het veen die er op wijzen dat de mens tot het veenmoeras was doorgedrongen, was het land veelal te zompig om goed bewoonbaar te zijn. Vanaf 500 voor Chr. kreeg de zee wel weer beperkte invloed, toen tijdens een storm de strandwal bij Walcheren doorbrak en kleine getijdengebieden vlak achter de barrière ontstonden. De strandwallen en resterende hoger opgeslibde delen van het getijdengebied waren het beste geschikt voor bewoning; in het strandwallen- en duingebied van Walcheren zijn bewoningssporen uit de Brons- en IJzertijd aangetroffen, indicatie voor eeuwenlange bewoning in dit deel van het gebied. In het veengebied van Walcheren en langs de Schelde op Tholen zijn sporen van menselijke aanwezigheid aangetroffen van rond 200 voor Chr., wat een indicatie is dat het veen hier ontwaterd moet zijn om vestiging mogelijk te maken. In de vier eeuwen daarna nam de bevolking af, iets wat niet door landschappelijke veranderingen verklaard kan worden (Brugman e.a., 2011a; Vos & Van Heeringen, 1997).

Rond 200 na Chr., in de Midden-Romeinse Tijd, keerde de mens in groten getale terug in het Zeeuwse kustgebied en wel in het veengebied. Grote delen van het veen werden door middel van sloten ontwaterd in deze periode en mensen vestigden zich op Walcheren, Zuid-Beveland, westelijk Zeeuws-Vlaanderen en langs de Schelde op Tholen en Schouwen. De sloten bevorderden het natuurlijke ontwateringsproces, dat plaatsvond via kreekjes en geulen. Dit menselijk ingrijpen had grote gevolgen voor het landschap: het maaiveld daalde door ontwatering, oxidatie en het afgraven van het veen, waardoor de zee de lager liggende delen weer kon overstromen. Nieuwe geulen sneden zich in, ruimden het veen verder op en verbeterden op hun beurt de ontwatering van het veen verder. Hierdoor begon een zichzelf versterkend proces van bodemdaling, erosie en overstroming. Als gevolg hiervan veranderde het kustmoeras tussen circa 300 en 400 na Chr. wederom in een getijdengebied. Bewoningssporen uit deze laatste periode zijn nauwelijks gevonden. Voor het verdrinkende veengebied is dit te verklaren, maar ook in het strandwallen- en duingebied verdwijnt de bevolking. Dit hangt waarschijnlijk samen met de bevolkingsmigratie, veroorzaakt door politieke onrust als gevolg van het uiteenvallen van het Romeinse Rijk (Brugman e.a., 2011a; Vos & Van Heeringen, 1997).

De nieuwe geulen namen het debiet van de oude geulen over, waardoor deze laatste verzandden. De nieuwe situatie van klei op veen (Walcheren Laagpakket op Hollandveen Laagpakket) en het deels eroderen van het veen door zowel natuurlijke als menselijke oorzaken, leidde tot een tweedeling in de Zeeuwse bodem: Oudland en Nieuwland (Brugman e.a., 2011a; Vos & Van Heeringen, 1997). Het Oudland behelst die delen van het zuidwestelijk zeekleigebied waar niet al het veen is verdwenen. Hier zijn de veen- en klei-op-veengebieden sterk ingeklonken na ontwatering, waardoor de zandige geul- en kreekopvullingen hoger kwamen te liggen dan het omringende landschap. Deze differentiële klink heeft in gebieden waar oligotroof (voedselarm) veen voorkwam zelfs een reliëfinversie teweeggebracht. Differentiële klink had tot gevolg dat de verlande geulen en kreken als kreekruggen hoog in het landschap kwamen te liggen. De zandige en kalkrijke kreekruggen, hoog en droog, waren geschikt voor bewoning, om op te akkeren en om wegen te dragen. De kalkarme ingeklonken veen- en klei-op-veengebieden, laag en nat, waren alleen geschikt als weiland (Berendsen 2005).

Het Nieuwland draagt de stempel van menselijk ingrepen in de Middeleeuwen. Vanaf circa 1250 na Chr. werden nieuwe landaanwassen langs de kust en getijdengeulen ingedijkt, om bescherming te bieden tegen stormvloeden. Dit nieuwe land bestaat uit zandig, kalkrijk sediment. Al het veen in de ondergrond is verdwenen door erosie, zodat de voor het Oudland zo kenmerkende differentiële klink niet kon plaatsvinden – laat staan reliëfinversie. Het Nieuwland is dan ook zeer vlak en kent nauwelijks reliëf, in tegenstelling tot het Oudland. De bedijking had onbedoeld grote invloed op het getijdenproces: het stormvloedniveau tegen de dijken steeg, terwijl het land achter de dijken door ontwatering en ontginning van het veen steeds verder daalde. Ook de voor o.a. Zeeland kenmerkende selnering of moernering - zoutwinning door afgraven en verbranden van door zeewater overspoeld veen - hielp deze invloed in de hand door grote gaten in het veen achter te laten. Uiteindelijk leidde dit alles ertoe dat extreme stormvloeden tot dijkdoorbraken konden leiden, die vervolgens catastrofale overstromingen tot gevolg hadden. Vele dorpen, zoals Valkenisse, Tholseinde, Nieuwlande en het oorspronkelijke Rilland op Zuid-Beveland zijn zo verdronken. De tweede St. Elizabethsvloed in 1421 is het bekendste voorbeeld van een dergelijke ramp in het verleden, maar ook de Watersnoodramp van 1953 was het gevolg van een stormvloed. Zo had de mens in de laatste eeuwen een grote invloed op de landschapsgenese van het zuidwestelijk zeekleigebied.

2.3 GEOMORFOLOGIE

Op de geomorfologische overzichtskaart zijn de gevolgen van de landschapsgenese goed te zien (zie bijlage 3.1). De kaart toont Zuid-Beveland als een schakering van vlakten, welvingen en lage ruggen. Dit zijn de oeverwallen, kreekruggen en vlakten die door de getijdenwerking zijn ontstaan en samen het Walcheren Laagpakket aan de oppervlakte vormen. Het grootste deel van Zuid-Beveland behoort tot het vlakke Nieuwland, maar er zijn ook delen van het reliëfrijke Oudland te zien. Op de ingezoomde geomorfologische deelkaarten zijn de plangebieden te zien (zie bijlage 3.2 t/m 3.4):

2.3.1 WILLEM ANNA POLDER

Het plangebied Willem Anna Polder ligt volgens de geomorfologische kaart op de overgang van een getij-inversierug naar een vlakte van getij-afzettingen (zie bijlage 3.2). De aanwezigheid van reliëfinversie veronderstelt een ligging in het Oudland. Het Actueel Hoogtebestand Nederland (AHN) reflecteert de geomorfologische kaart voor een deel, maar de getij-inversierug lijkt ook aanwezig te zijn ter hoogte van het plangebied (zie bijlage 4.2).

2.3.2 KRUININGEN

Het plangebied Kruiningen ligt volgens de geomorfologische kaart op de overgang van een getij-oeverwal naar welvingen in getijafzettingen (zie bijlage 3.3). Hoewel er geen sprake is van reliëfinversie is hier wel differentiële klink opgetreden. De opvallende laagte op de kaart (code 3N10) is ontstaan door moernering en is een indicatie voor activiteit in het verleden. Op het AHN is de oeverwal of kreekrug waarop het plangebied deels ligt goed te zien, alsook de laagte ten noorden ervan (zie bijlage 4.3).

2.3.3 RILLAND WEST EN OOST

De plangebieden Rilland West en Oost liggen volgens de geomorfologische kaart deels op hooggelegen getij-afzettingen en deels op een lager gelegen zee-erosiegeul (zie bijlage 3.4). Op het AHN is tevens te zien dat het maaiveld in dit plangebied relatief hoog is, afgezien van de duidelijk aanwezige erosiegeul (zie bijlage 4.4).

2.4 BODEM EN GEOLOGIE

Op de bodemkundige overzichtskaart is te zien hoe het overgrote deel van Zuid-Beveland bedekt is met zeekleigronden (zie bijlage 5.1). Op de ingezoomde bodemkundige deelkaarten zijn de plangebieden te zien (zie bijlage 5.2 t/m 5.4):

2.4.1 WILLEM ANNA POLDER

De bodem van het plangebied Willem Anna Polder bestaat volgens de bodemkaart uit kalkrijke poldervaaggronden, variërend van lichte zavel tot lichte en zware klei. Dit zijn over het algemeen jonge, weinig ontwikkelde gronden waarin de verschillende bodemvormende processen nog weinig invloed hebben gehad. Het zijn kleigronden met een grijze, roestig gevlekte ondergrond die niet slap is. Ze hebben een grijze, humusarme bovengrond (De Bakker 1966). Boring B48H0289 in DINOLoket is ten oosten van het plangebied gezet, op dezelfde overgang van getij-oeverwal naar getij-vlakte: de boring toont een pakket van kleilagen van maaiveld tot 1,85 m –NAP. Hieronder bevindt zich een laag veen tot 3,07 m –NAP en daaronder weer een pakket van kleilagen. De top van het Pleistocene zand (Formatie van Boxtel) bevindt zich op 7,42 m –NAP.

Op de geologische kaart van Beveland (zie Afbeelding 10) zijn in het plangebied de afzettingen te zien die op de beleidskaarten een gematigde archeologische verwachting hebben gekregen, met code A0.3b. Deze beleidskaarten zijn gebaseerd op de kaarten van Vos & Van Heeringen (1997). De legenda van de geologische kaart geeft de uitlopers weer als Afzettingen van Duinkerke IIIb op Hollandveen op Afzettingen van Calais (klei op zand). De omringende gronden hebben de code D0.3b; Afzettingen van Duinkerke IIIb. Deze terminologie stamt uit de niet meer gehanteerde oudere lithostratigrafie, maar is op lokaal niveau nog steeds bruikbaar om differentiatie aan te brengen in de tegenwoordige Formaties en Laagpakketten. De datering van de Afzettingen van Calais is hier lokaal tussen circa 6200 en 2200 voor Chr., de datering van het Hollandveen tussen circa 2200 voor Chr. en 200 na Chr. en de datering van de Afzettingen van Duinkerke IIb vanaf circa 1200 na Chr.

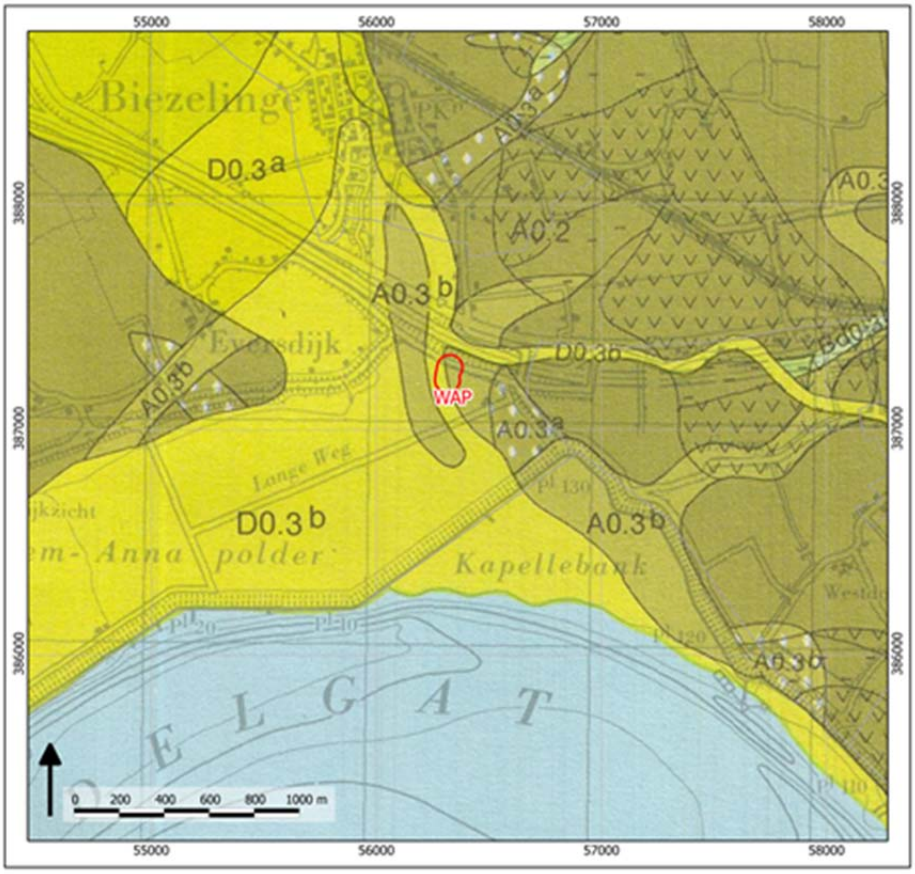

Afbeelding 10: Uitsnede van de geologische kaart van Beveland (plangebied Willem Anna Polder in rood).

De grondwaterstand in dit plangebied varieert van 40-80 cm (Gemiddeld Hoogste Grondwaterstand) tot meer dan 120 cm (Gemiddeld Laagste Grondwaterstand). Dit is een redelijk droge bodem, waarin organische resten redelijk slecht geconserveerd worden.

2.4.2 KRUININGEN

De bodem van het plangebied Kruiningen bestaat eveneens uit kalkrijke poldervaaggronden, variërend van lichte tot zware zavel. Ook zijn er kalkarme poldervaaggronden aanwezig, bestaande uit zavel. Boring B49A0033 in DINOLoket is in het plangebied zelf gezet: de boring toont enkele kleilagen van maaiveld tot 1,20 m –NAP. Hieronder bevindt zich een pakket zandlagen tot 18,4 m –NAP. De top van het Pleistocene zand (Formatie van Kreftenheye) begint hieronder. De grondwaterstand in dit plangebied varieert van 40 en meer dan 80 cm (Gemiddeld Hoogste Grondwaterstand) tot meer dan 160 cm (Gemiddeld Laagste Grondwaterstand). Dit is een droge bodem, waarin organische resten slecht geconserveerd worden.

2.4.3 RILLAND WEST EN OOST

De bodem van de plangebieden Rilland West en Oost bestaat uit kalkhoudende vlakvaaggronden, bestaande uit zeer fijn zand. Dit zijn gronden die geheel uit grijs zand bestaan, hoewel ze soms een humusarme tot matig humeuze, weinig donker gekleurde bovengrond hebben. Dun overslibde zandgronden worden ook tot de vlakvaaggronden gerekend (De Bakker 1966). Boring B49D0238 in DINOLoket is ten zuiden van de plangebieden gezet, in dezelfde kalkhoudende zandgrond: de boring toont een dun kleidek van maaiveld tot 0,20 m –NAP. Hieronder bevindt zich een pakket zandlagen tot 2,60 m –NAP en daaronder een leemlaag tot 4,15 –NAP. Hieronder begint een veenlaag tot 7,20 m –NAP. De top van het Pleistocene zand (Formatie van Boxtel) begint hieronder. De grondwaterstand in deze plangebieden varieert van minder dan 40 cm (Gemiddeld Hoogste Grondwaterstand) tot meer dan 120 cm (Gemiddeld Laagste Grondwaterstand). Dit is een natte/vochtige tot droge bodem, waarin organische resten redelijk goed tot slecht geconserveerd worden.

	Willem Anna Polder	Kruiningen	Rilland West	Rilland Oost
Geologisch deellandschap	Zuidwestelijk zeekleigebied	Zuidwestelijk zeekleigebied	Zuidwestelijk zeekleigebied	Zuidwestelijk zeekleigebied
Geomorfologische eenheid	Vlakte van getij-afzettingen (2M35), getij-inversierug (3K33)	Getij-oeverwal (3K34), welvingen in getijafzettingen (3L20)	Vlakte van getij-afzettingen (hooggelegen) (2M35a), zee-erosiegeul (2R14)	Vlakte van getij-afzettingen (hooggelegen) (2M35a)
Bodemeenheid	Kalkrijke poldervaaggronden; lichte zavel (Mn15A-VI), lichte klei (Mn35A-VI), zware klei (Mn45A-VI)	Kalkarme poldervaaggronden; zavel (Mn52C-VII), kalkrijke poldervaaggronden; lichte zavel (Mn15A-VI), zware zavel (Mn25A)	Kalkhoudende vlakvaaggronden; zeer fijn zand (Zn40A)	Kalkhoudende vlakvaaggronden; zeer fijn zand (Zn40A)
Maaiveldhoogte	Circa 1,50 m +NAP tot 1,60 m +NAP	Circa 0,20 –NAP tot circa 0,10 m +NAP	Circa 0,30 –NAP tot circa 1,10 m +NAP	Circa 0,30 –NAP tot circa 1,10 m +NAP
Grondwaterstand	VI (GHG 40-80, GLG >120)	VI, VII (GHG >80, GLG >160) III (GHG <40, GLG 80-120), IV (GHG >40, GLG 80-120), VI	III, IV, VI	III, IV, VI

Tabel 3: Landschap.

3 Archeologie

3.1 INLEIDING

Om een archeologische verwachting voor een gebied op te kunnen stellen, is eerst kennis nodig van de reeds bekende archeologische waarden, en van de verwachting die voor het gebied geldt. In dit hoofdstuk zullen de bekende archeologische waarden en verwachtingen uit verschillende bronnen beschreven worden.

3.2 ARCHEOLOGISCHE STATUS VAN DE PLANGEBIEDEN

Geen van de plangebieden heeft een archeologisch wettelijk beschermde status of is aangewezen als archeologische waardevol terrein op de Archeologische MonumentenKaart (AMK; zie bijlage 6.1 t/m 6.4). In het centraal Archeologische Informatiesysteem (ARCHIS-2) van de Rijksdienst voor het Cultureel Erfgoed (RCE) staan in de plangebieden geen archeologische waarnemingen of vondstmeldingen geregistreerd. Alle plangebieden worden deels doorsneden door onderzoeksmelding 54.376; een booronderzoek over het gehele tracé van het Zuid-West 380 kV-project, ten behoeve van de te bouwen hoogspanningsmasten. Dit onderzoek is nog in de aanvangsfase en er zijn dan ook nog geen resultaten bekend die dit bureauonderzoek kunnen ondersteunen (V. de Lange, Grontmij, mondelinge mededeling). In plangebieden Rilland West en Oost staat tevens een bureauonderzoek geregistreerd (onderzoeksmeldingsnummer 43.996). Een bureauonderzoek geeft geen nieuwe primaire informatie en wordt hier dan ook verder buiten beschouwing gelaten. Het plangebied WAP heeft op de Indicatieve Kaart Archeologische Waarden (IKAW, ook opgenomen in de CHS van de provincie Zeeland) een lage tot zeer lage archeologische verwachting, het plangebied Kruiningen een middelhoge tot hoge archeologische verwachting en de plangebieden Rilland West en Oost een lage archeologische verwachting.
De verwachtingen op de IKAW zijn gebaseerd op de geomorfologie en gelden tot de Middeleeuwen, wanneer de mens dusdanig leert in te grijpen in de waterhuishouding dat niet alleen natuurlijke droge plekken als bewoningslocatie in aanmerking komen.

3.3 ARCHEOLOGISCHE STATUS VAN DE ONDERZOEKSGEBIEDEN

In de onderzoeksgebieden staan meerdere archeologische monumenten, vondstmeldingen en waarnemingen geregistreerd. Alleen die archeologische monumenten, meldingen en waarnemingen, die bijdragen aan het specificeren van de archeologische verwachting worden hier behandeld. Dit zijn over het algemeen die monumenten, meldingen en waarnemingen met een vergelijkbare landschappelijke ligging en landschapsgenese als het plangebied. Hierbij wordt vooral gelet op datering, landschappelijke ligging (inclusief stratigrafische positie) en complextype. Deze aspecten geven namelijk inzicht in de bewoningsgeschiedenis in relatie tot landschapsvorming (sedimentatie en erosie) en landschapsgebruik, zodat voor de in hoofdstuk 6 onderscheiden landschapstypen de verwachting kan worden gespecificeerd. In de onderzoeksgebieden zijn tevens meerdere archeologisch onderzoeken uitgevoerd.

Alleen die onderzoeken, die bijdragen aan het specificeren van de archeologische verwachting, worden hier behandeld. Daarbij wordt vooral gelet op te verwachten bodemopbouw, stratigrafische positie en fysieke kwaliteit van archeologische waarden. De bureauonderzoeken worden buiten beschouwing gelaten, omdat deze over het algemeen geen nieuwe informatie opleveren, maar bestaande informatie samenvatten. Relevante monumenten, vondstmeldingen, waarnemingen en onderzoeksmeldingen zijn per onderzoeksgebied in onderzoeksclusters gegroepeerd (zie bijlage 6.2 t/m 6.4).

3.3.1 WILLEM ANNA POLDER

In het onderzoeksgebied rondom het plangebied WAP zijn vier onderzoeksclusters gedefinieerd (zie bijlage 6.2; omwille van de leesbaarheid zijn geen nummers van meldingen, onderzoeken of monumenten afgedrukt op de kaart).

- Cluster 1 betreft de waarnemingen circa 1 km ten oosten van plangebied WAP, in plangebied Smokkelhoek (o.a. waarnemingsnr. 54.126, 54.153 en 54.156), waar meerdere middeleeuwse kreekruggen liggen. Tijdens meerdere (veld)onderzoeken op dit terrein zijn op de verschillende percelen van dit plangebied vondsten aangetroffen uit de Romeinse Tijd, Middeleeuwen en Nieuwe Tijd. De Romeinse vondsten, waaronder 43 locaties met aardewerk die tijdens oppervlaktekartering aan het licht kwamen, hangen samen met bewoning op het Hollandveen. Het meeste Romeinse aardewerk werd aangetroffen op circa 2,8 m -NAP in een zandige geulvulling (waarschijnlijk verspoeld). Een enkele Romeinse scherf werd aangetroffen in een boring tussen circa 2,11 m en 2,31 m -NAP, in de top van het veraarde veen. Romeinse sporen zijn daar waarschijnlijk verloren gegaan door (Romeinse) moernering. De geringe hoeveelheid vondstmateriaal in de intacte top van het Hollandveen viel op, gezien de grote hoeveelheid Romeins materiaal aan het oppervlak. Het aardewerk uit de Middeleeuwen en de Nieuwe Tijd betrof enkele fragmenten; uit eerder onderzoek in Zeeland blijkt dat op nagenoeg alle vindplaatsen een lichte strooiing van middeleeuws aardewerk aanwezig is. Mogelijk komt dit voor een groot deel door de bemesting van akkers met afval. Er werden tijdens de onderzoeken in plangebied Smokkelhoek geen duidelijke lagen met houtskool, bot, verbrande leem en dergelijke aangetroffen (Jansen, 2003; onderzoeksmeldingsnummer 8.766).

- Cluster 2 is gelegen circa 800 m ten westen van plangebied WAP en bevat een terrein van zeer hoge archeologische waarde in het gehucht Eversdijk, met resten van een kerk en begraafplaats uit de Late Middeleeuwen, op een terpachtige hoogte. Waarneming 416.449, ten zuiden van Eversdijk, is gedaan tijdens een archeologische begeleiding; hier werden middeleeuwse vondsten gedaan in een cultuurlaag op een inversierug. Binnen de vindplaats zijn een vondstlaag, een grondspoor en verschillende fragmenten aardewerk aangetroffen. Het aardewerk en een schijffibula konden worden gedateerd in de 10e tot 13e eeuw. Er werd echter ook ouder en jonger vondstmateriaal aangetroffen, namelijk een Romeinse munt uit de 3e eeuw en andere metalen artefacten (De Groot & Warning, 2010).

- Cluster 3 betreft het dorp Biezelinge (een terrein van hoge archeologische waarde, nr. 13.452) en haar omgeving, circa 600 meter ten noordwesten van plangebied WAP. Biezelinge is waarschijnlijk in de 11de eeuw ontstaan aan een dam in een kreek en is gelegen op een inversierug. De waarnemingen ten westen van Biezelinge (o.a. nrs. 402.252, 402.258 en 404.094) liggen allemaal op een getij-inversierug en zijn tijdens booronderzoek en oppervlaktekartering gedaan. Het gaat voornamelijk om middeleeuws aardewerk uit de bouwvoor, maar ook op dieptes van 40 en 90 cm –Mv (NAP hoogtes onbekend) werden enkele scherven aangetroffen (Hijma, 2005). Ten oosten van Biezelinge ligt beschermd monumentterrein 661, met de resten van het laatmiddeleeuwse klooster Jeruzalem.

- Cluster 4, circa 1,5 km ten noorden van plangebied WAP, bevat onder andere de resten van een monumentterrein van hoge archeologische waarde (nr. 13.775), welke toebehoren aan het 14de-eeuwse kasteel Poucques. Meerdere waarnemingen in de buurt van dit terrein betreffen vondsten en sporen uit de Late Middeleeuwen. Ook de dorpskern van Kapelle (monumentnr. 13.451) heeft een datering vanaf de Late Middeleeuwen. De omgeving van dit dorp, gelegen op een inversierug, is opmerkelijk rijk aan middeleeuwse kastelen.

Bovenstaande informatie leidt tot een grote kans op het aantreffen van archeologische resten uit de periode Romeinse Tijd-Nieuwe Tijd in het plangebied, op de flank van de getij-inversierug en op het veen. Mogelijk zijn ook resten van eerdere perioden aanwezig in diepere lagen, maar hier zijn nog geen aanwijzingen voor gevonden.

3.3.2 KRUININGEN

In het onderzoeksgebied rondom plangebied Kruiningen zijn vier onderzoeksclusters gedefinieerd (zie bijlage 6.3; omwille van de leesbaarheid zijn geen nummers van meldingen, onderzoeken of monumenten afgedrukt op de kaart).

- Cluster 1 betreft de nabije omgeving van plangebied Kruiningen (tot circa 1 km), waar meerdere onderzoeken en waarnemingen zijn gedaan op of nabij de kreekrug/oeverwal. Ten oosten van het plangebied zijn twee onderzoeksmeldingen geregistreerd, waarvan een booronderzoek (onderzoeksmeldingsnummer. 30.932). De onderzoeken en waarnemingen ten zuiden van het plangebied betreffen een booronderzoek en een begeleiding (onderzoeksmeldingsnummers 9.511 en 16.782), ten behoeve van de uitbreiding van een bedrijventerrein. De oeverwal waar ook het plangebied op gelegen is wordt in verband gebracht met de geul de Yerseke, die in of na de Romeinse Tijd is gevormd. Waarneming 402.631 betreft een Romeinse wetsteen van fylliet, aangetroffen op een diepte van 2,28 m –NAP. Het onderzoek en de waarneming (nr. 128.210) in het uiterste zuidoosten van de cluster houden verband met de verwachte resten van 'kasteel' Kint van Trente uit de 17e eeuw. Door middel van geofysisch onderzoek kon de locatie niet worden vastgesteld.

- Cluster 2 bevat de dorpskern van Kruiningen, een terrein van hoge archeologische waarde (nr. 13.392), circa 1 km ten zuiden van plangebied Kruiningen. Het dorp Kruiningen wordt al vanaf de 10e eeuw genoemd. De oudste vondsten hier gedaan dateren in de 11e en 12e eeuw. Onderzoeksmelding 15.883, ten noorden van het dorp, betreft een booronderzoek waarin Afzettingen van Duinkerke II/III op Hollandveen (grotendeels niet intact door erosie en moernering) op Afzettingen van Calais werden aangetroffen. Er werden geen vindplaatsen aangetroffen.

- Cluster 3, circa 1,4 km ten westen van plangebied Kruiningen, omvat de dorpskernen van Vlake (monumentnrs. 1.344 en 13.455) en Schore (monumentnr. 13.454). Beide dorpen zijn laatmiddeleeuws van oorsprong en liggen op welvingen en kreekafzettingen.

- Cluster 4, circa 1,2 km ten noorden van plangebied Kruiningen, omvat meerdere onderzoeken en waarnemingen, ten zuiden van Yerseke, waaronder op de kreekrug/oeverwal waar het plangebied op ligt (onderzoeksmeldingsnr. 4.920).[1]

Bovenstaande informatie leidt tot een grote kans op het aantreffen van archeologische resten uit de periode Middeleeuwen-Nieuwe Tijd in het plangebied, op de flank van een getij-oeverwal. Mogelijk zijn ook resten van eerdere perioden aanwezig in diepere lagen, maar hier zijn nog geen aanwijzingen voor gevonden, anders dan de Romeinse wetsteen bij Yerseke.

3.3.3 RILLAND WEST EN OOST

In het onderzoeksgebied rondom de plangebieden Rilland West en Oost is één onderzoekscluster gedefinieerd (zie bijlage 6.4).

- Cluster 1 omvat alle onderzoeken en waarnemingen in het onderzoeksgebied (circa 1,5 km) rondom plangebieden Rilland West en Oost. De waarnemingen op de kaart zijn allemaal in de jaren '80 van de vorige eeuw gedaan en geven geen verdere informatie. Onderzoeksmelding 22.335, een tracé dat langs de Separatiedijk loopt en aan de andere kant van de snelweg boven het plangebied eindigt, heeft de meeste informatie opgeleverd. Tijdens een archeologische begeleiding zijn hier middeleeuwse resten aangetroffen in de Walcheren en Hollandveen Laagpakketten. Over het deel van het tracé nabij het plangebied is helaas geen specifieke informatie beschikbaar.

- Ten zuidwesten van het onderzoeksgebied ligt het huidige dorp Rilland, maar ten zuiden ervan ligt het oorspronkelijke – en nu verdronken – Rilland (zie bijlage 6a, de overzichtskaart). Dit is een terrein van archeologische waarde (monumentnr. 13.395) uit de Late Middeleeuwen; Rilland verdronk tussen 1530 en 1532.

Bovenstaande informatie leidt tot een kleine kans op het aantreffen van archeologische resten uit de periode Middeleeuwen-Nieuwe Tijd in het plangebied. Mogelijk zijn wel resten van eerdere perioden aanwezig in diepere lagen, zoals op het veen, maar hier zijn nog geen aanwijzingen voor gevonden.

	Willem Anna Polder	Kruiningen	Rilland West	Rilland Oost
Wettelijk beschermd monument	Nee	Nee	Nee	Nee
AMK	Nee	Nee	Nee	Nee
IKAW/CHS	Lage tot zeer lage trefkans	Middelhoge tot hoge trefkans	Lage trefkans	Lage trefkans
Waarnemingen/vondstmeldingen	Nee	Nee	Nee	Nee
Onderzoeksmeldingen	Ja	Ja	Ja	Ja

Tabel 4: Archeologische waarden.

[1] De informatie en rapportages hiervan zijn echter allemaal niet beschikbaar gemaakt via DANS-EASY en de resultaten zijn dan ook niet raadpleegbaar.

4 Historische situatie en bodemverstoringen

4.1 HISTORISCHE SITUATIE

De historische situatie in de plangebieden is door middel van het raadplegen van historisch kaartmateriaal bepaald, daar waar mogelijk.

4.1.1 WILLEM ANNA POLDER

Plangebied Willem Anna Polder ligt in de gelijknamige Willem-Annapolder, welke in 1756 is ingedijkt. Echter, ook voor indijking was hier land aanwezig. Na raadplegen van beschikbaar historisch kaartmateriaal is vastgesteld dat er in elk geval vanaf de 17e eeuw zeer waarschijnlijk geen bewoning heeft plaatsgevonden in het plangebied: op de grootschalige kaart van Zeeland door Nicolaas Visser (de oudst geraadpleegde kaart bij alle plangebieden), het minuutplan uit 1811-1832, de topografische en topografisch militaire kaarten is geen bewoning te zien en is het als wei-/akkerland gebruikt. De huidige situatie, met de ligging aan de A58, is vanaf 1984 te zien op de topografische kaart (Afbeelding 13).
Het hoogspanningsstation is op de topografische kaart van 1993 nog niet te zien (watwaswaar.nl).

Afbeelding 11: Plangebied Willem Anna Polder (in rood) op de kaart van Nicolaas Visser 1680.

Afbeelding 12: Plangebied Willem Anna Polder (in rood) op de Topografische Militaire Kaart 1911.

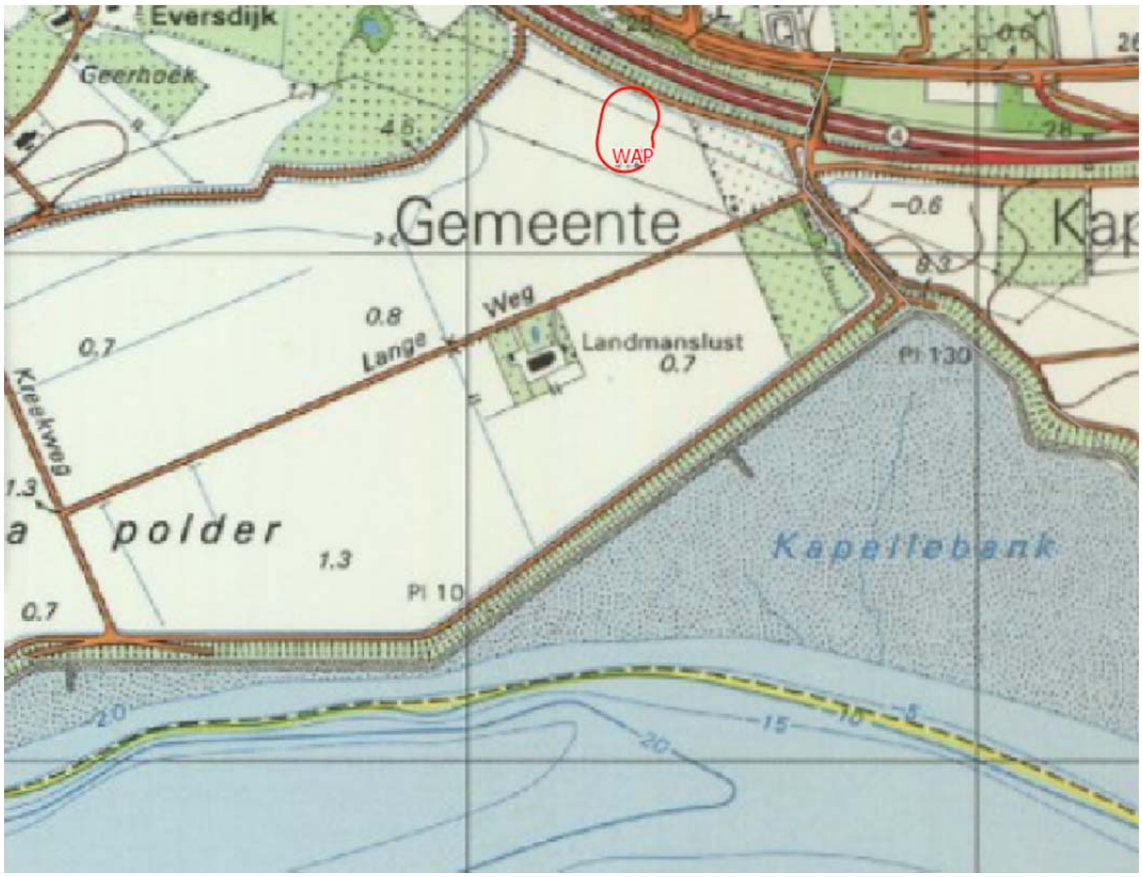

Afbeelding 13: Plangebied Willem Anna Polder (in rood) op de Topografische Kaart 1984.

4.1.2 KRUININGEN

Plangebied Kruiningen is gelegen langs de Zanddijk, bij de kruising met de spoorlijn naar Goes. Op het kadastrale minuutplan van 1811-1832 is geen bebouwing aanwezig in het plangebied en is het volgens de Oorspronkelijk Aanwijzende Tafelen (OAT) in gebruik als weiland; er is wel bebouwing iets ten zuidwesten ervan, aan de andere kant van de huidige spoorlijn. Op de topografisch militaire kaart van 1910 is de spoorlijn reeds aangelegd en is er bebouwing en een kunstmatige waterpartij aanwezig ter hoogte van het plangebied (zie Afbeelding 15). De bebouwing ligt ter hoogte van het huidige hoogspanningsstation en komt tot op de topografische kaart van 1980 voor; op de topografische kaart van 1988 is het hoogspanningsstation aanwezig op deze locatie (watwaswaar.nl).

Afbeelding 14: Plangebied Kruiningen (in rood) op de kaart van Nicolaas Visser 1680.

Afbeelding 15: Plangebied Kruiningen (in rood) op de Topografisch Militaire Kaart van 1910.

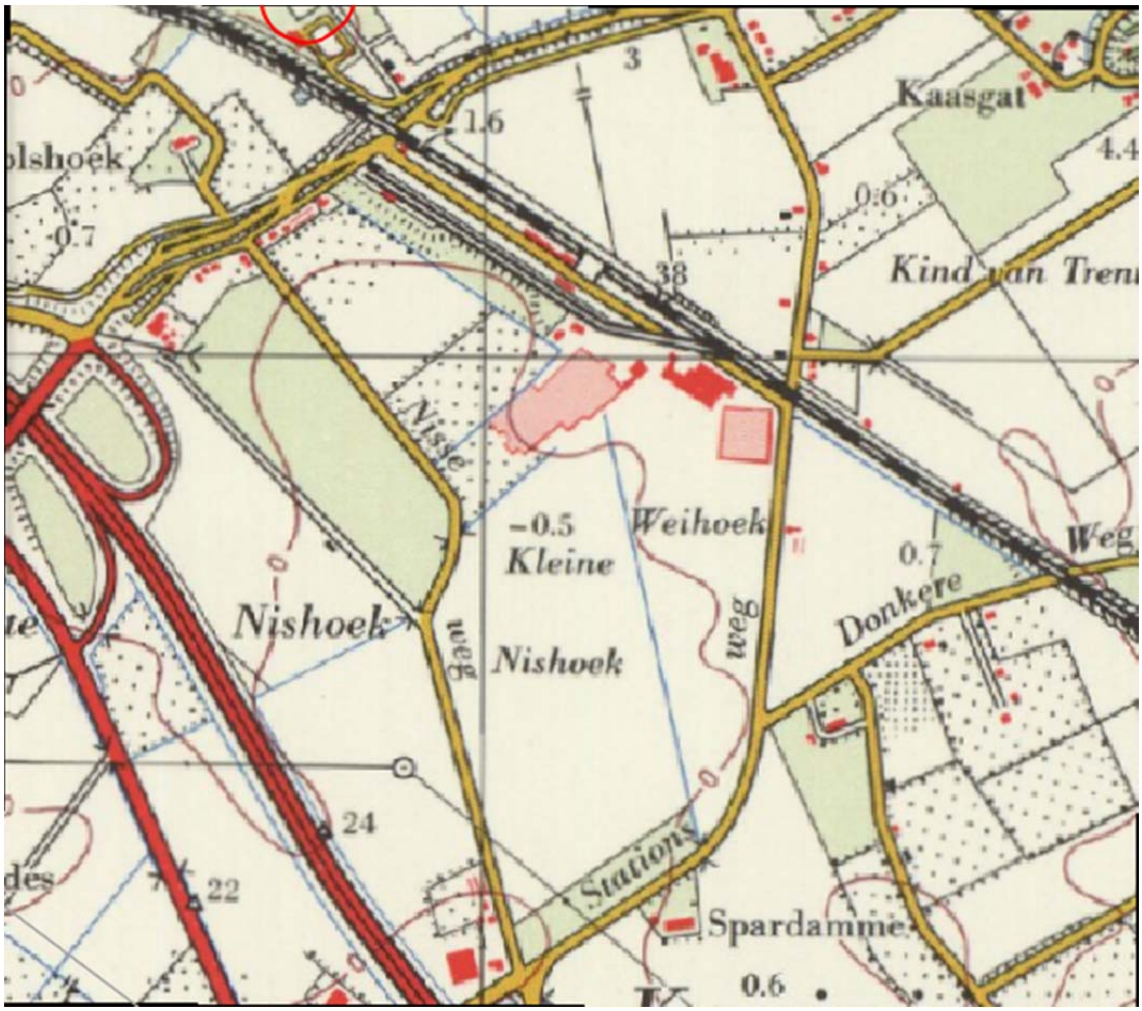

Afbeelding 16: Plangebied Kruiningen (in rood) op de Topografische Kaart 1980.

4.1.3 RILLAND WEST EN OOST

Plangebieden Rilland West en Oost zijn gelegen in de Eerste Bathpolder, welke in 1856 is ingedijkt. Echter, ook voor indijking was hier land aanwezig. Op al het geraadpleegde historische kaartmateriaal zijn de plangebieden onbebouwd (ook op de topografische kaart van 1995 is het hoogspanningsstation nog niet te zien). Er is geen minuutplan in 1811-1832 gemaakt voor deze locatie (watwaswaar.nl); wel is de veldminuut van De Man uit 1856 geraadpleegd (zie Afbeelding 18).

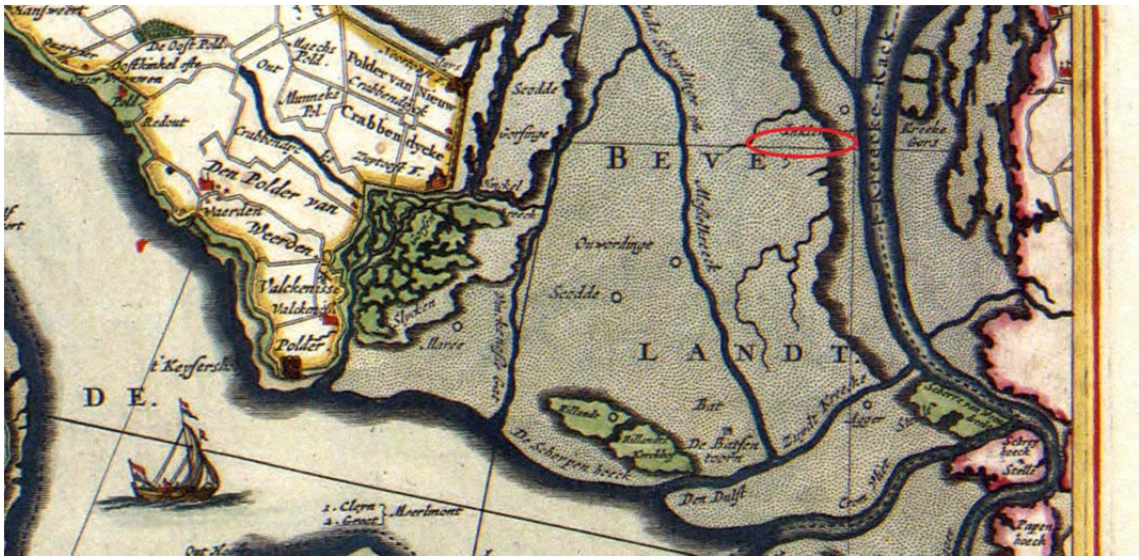

Afbeelding 17: Plangebied Rilland West en Oost (in rood) op de kaart van Nicolaas Visser 1680.

Afbeelding 18: Plangebied Rilland West en Oost (in rood) op de veldminuut De Man 1856.

Afbeelding 19: Plangebied Rilland West en Oost (in rood) op de Topografische Militaire Kaart 1910.

4.2 BODEMVERSTORINGEN

Om de mate van bodemverstoring in de plangebieden vast te stellen is gekeken naar de mogelijke gevolgen van historische bebouwing, alsook naar beschikbare informatie over saneringen en overig milieu hygiënisch onderzoek.

4.2.1 WILLEM ANNA POLDER

Plangebieden WAP zijn volgens het historisch kaartmateriaal tot nu toe niet bebouwd geweest; derhalve zijn geen concrete verstoringen bekend. Er zijn geen saneringen of bodemonderzoeken geregistreerd in het Bodemloket (www.bodemloket.nl).

4.2.2 KRUININGEN

Plangebied Kruiningen kent historische bebouwing van onbekende aard, ter hoogte van het huidige hoogspanningsstation. Ter hoogte van het geplande kabelbed is in het verleden een kunstmatige waterpartij aanwezig geweest; de ontgraving hiervan kan de bovenste laag van de bodem tot onbekende diepte hebben verstoord. Ter hoogte van het hoogspanningsstation zijn in het Bodemloket twee activiteiten geregistreerd, waarvan één onverdacht en één verband houdend met een kunstmatige-inseminatiestation.

4.2.3 RILLAND WEST EN OOST

Plangebieden Rilland West en Oost worden door een strook aangelegd bos doorsneden; het planten hiervan heeft de ondergrond ook mogelijk in onbekende mate verstoord. Het is niet bekend in hoeverre de ruilverkaveling en ploegwerkzaamheden voor verstoring hebben gezorgd in de plangebieden. Er zijn geen saneringen of bodemonderzoeken geregistreerd in het Bodemloket.

	Willem Anna Polder	Kruiningen	Rilland West	Rilland Oost
Landschapstype	Zeekleigebied	Zeekleigebied	Zeekleigebied	Zeekleigebied
Historische bebouwing	Nee	Nee	Nee	Nee
Historisch gebruik	Polder	Polder	Polder	Polder
Huidig gebruik	Wei-/akkerland	Wei-/akkerland	Wei-/akkerland en bos	Wei-/akkerland en bos
Bodemverstoringen	Waarschijnlijk (ploeg- en graafwerkzaamheden)	Waarschijnlijk (ploeg- en graafwerkzaamheden)	Waarschijnlijk (ploeg- en graafwerkzaamheden)	Waarschijnlijk (ploeg- en graafwerkzaamheden)

Tabel 5: Huidig gebruik, historische situatie en bodemverstoringen.

5 Gespecificeerde archeologische verwachting

5.1 STRATIGRAFISCHE POSITIE EN DIEPTELIGGING

Op het Pleistocene dekzand (Formatie van Boxtel) is bewoning mogelijk geweest tijdens het Paleolithicum en Mesolithicum. Bewoningssporen uit het Neolithicum tot en met de Bronstijd kunnen voorkomen op de Afzettingen van Calais (Wormer Laagpakket). Sporen van bewoning uit de IJzertijd en Romeinse Tijd kunnen worden aangetroffen in de top van het Hollandveen. Op de Afzettingen van Duinkerke II en III (Walcheren Laagpakket) kunnen sporen van bewoning uit de Middeleeuwen en Nieuwe Tijd worden aangetroffen, op de verlande kreekruggen die in de Middeleeuwen zijn gevormd.

5.1.1 WILLEM ANNA POLDER

Dit plangebied ligt in een polder uit de Nieuwe Tijd, mogelijk op de flank van een getij-inversierug.

- De top van het Pleistocene dekzand bevindt zich mogelijk op circa 7,5 m –NAP.
- De top van de Afzettingen van Calais bevindt zich mogelijk op circa 3 m –NAP (4,5 m –Mv).
- De top van het Hollandveen bevindt zich mogelijk op circa 1,8 m –NAP (3,3 m –Mv).
- De top van de Afzettingen van Duinkerke bevindt zich onder de bouwvoor.

5.1.2 KRUININGEN

Dit plangebied ligt in een polder uit de Nieuwe Tijd, op de flank van een getij-oeverwal.

- De top van het Pleistocene dekzand bevindt zich mogelijk op circa 18,5 m –NAP (17 m –Mv).
- Afzettingen van Calais zijn waarschijnlijk niet aanwezig.
- Hollandveen is waarschijnlijk niet aanwezig.
- De top van de Afzettingen van Duinkerke bevindt zich onder de bouwvoor.

5.1.3 RILLAND WEST EN OOST

Deze plangebieden liggen in een polder uit de Nieuwe Tijd.

- De top van het Pleistocene dekzand bevindt zich mogelijk op circa 7,2 m –NAP (tussen 6,9 en 8,3 m –Mv).
- Afzettingen van Calais zijn waarschijnlijk niet aanwezig.
- De top van het Hollandveen bevindt zich mogelijk op circa 4,1 m –NAP (tussen 3,8 en 5,2 m –Mv).
- De top van de Afzettingen van Duinkerke bevindt zich onder de bouwvoor.

5.2 GAAFHEID EN CONSERVERING

De verwachte gaafheid en conservering van archeologische waarden in de plangebieden is afhankelijk van de mate van bodemverstoring en hoogte van de grondwaterstand.

5.2.1 WILLEM ANNA POLDER

De gaafheid van archeologische resten in dit plangebied is gemiddeld tot hoog, gezien het feit dat hier nooit bebouwing lijkt te hebben gestaan. Over de mogelijke verstoring door ploegwerkzaamheden is geen uitspraak te doen. Gezien de vochtige tot droge bodem is de verwachte conserveringsgraad van anorganische vondsten gemiddeld tot hoog en voor organische vondsten gemiddeld.

5.2.2 KRUININGEN

Voor plangebied Kruiningen is de verwachte gaafheid laag tot gemiddeld, gezien de grote kans op vergraving door de aanleg van een waterpartij ter plaatse. Gezien de vochtige tot droge bodem is de verwachte conserveringsgraad van anorganische vondsten gemiddeld tot hoog en voor organische vondsten gemiddeld.

5.2.3 RILLAND WEST EN OOST

De gaafheid van archeologische resten in dit plangebied is laag tot gemiddeld, gezien het feit dat hier nooit bebouwing lijkt te hebben gestaan maar er wel een strook bos is aangelegd. Over de mogelijke verstoring door ploegwerkzaamheden is geen uitspraak te doen. Gezien de vochtige tot natte bodem is de verwachte conserveringsgraad van zowel anorganische als organische vondsten gemiddeld tot hoog.

5.3 ARCHEOLOGISCHE VERWACHTING

De archeologische verwachting in de plangebieden is gekoppeld aan de verwachte afzettingen en daarmee samenhangende bewoningsmogelijkheden, zoals hierboven beschreven.

Willem Anna Polder
Dit plangebied heeft een middelhoge verwachting op resten uit de periodes Paleolithicum-Mesolithicum, Neolithicum-Bronstijd, IJzertijd-Romeinse Tijd en Middeleeuwen-Nieuwe Tijd.

Kruiningen
Dit plangebied heeft een hoge verwachting op resten uit de periode Middeleeuwen-Nieuwe Tijd, alsook een middelhoge verwachting op resten uit de perioden Paleolithicum-Mesolithicum en een lage verwachting op resten uit de perioden Neolithicum-Bronstijd en IJzertijd-Romeinse Tijd.

Rilland West en Oost
Deze plangebieden hebben een middelhoge verwachting op resten uit de periodes Paleolithicum-Mesolithicum en IJzertijd-Romeinse Tijd, alsook een lage verwachting op resten uit de perioden Middeleeuwen-Nieuwe Tijd en Neolithicum-Bronstijd.

De geplande ontgravingsdiepte van 1,8 m –Mv maakt dat de Afzettingen van Duinkerke (Walcheren Laagpakket) het enige relevante archeologische niveau is voor de verwachting in elk gebied – en daarmee de bewoningsmogelijkheden in de Middeleeuwen en Nieuwe Tijd.

Voor deze periode kan de archeologische verwachting per plangebied dan als volgt worden bijgesteld:

- Willem Anna Polder : middelhoog
- Kruiningen : hoog
- Rilland West : laag
- Rilland Oost : laag

5.4 COMPLEXTYPEN EN PROSPECTIEKENMERKEN

De archeologische verwachtingen zijn van toepassing op de volgende complextypen: nederzetting, grafveld en landgebruik of -inrichting. Vindplaatsen zullen zich in de Middeleeuwen en Nieuwe Tijd als ophogingslagen, vondststrooiingen en –concentraties manifesteren in de bodem. In eerdere perioden manifesteren vindplaatsen zich in de bodem als cultuurlagen, vondststrooiingen en -concentraties. Oppervlaktevondsten en opgeploegde artefacten kunnen eveneens aangetroffen worden, maar zullen uiteraard niet meer in context aanwezig zijn.

	Willem Anna Polder	Kruiningen	Rilland West	Rilland Oost
Stratigrafische positie	Top dekzand, top Hollandveen, op oeverwal-/kreekrugafzettingen	Top dekzand, op oeverwal-/kreekrugafzettingen	Top dekzand, top Hollandveen, op oeverwal-/kreekrugafzettingen	Top dekzand, top Hollandveen, op oeverwal-/kreekrugafzettingen
Diepteligging	Vanaf maaiveld	Vanaf maaiveld	Vanaf 4,1 m –NAP (3,8 tot 5,2 m –Mv)	Vanaf 4,1 m –NAP (3,8 tot 5,2 m –Mv)
Gaafheid	Gemiddeld tot hoog	Laag tot gemiddeld	Laag tot gemiddeld	Laag tot gemiddeld
Conservering	Gemiddeld tot hoog	Gemiddeld tot hoog	Gemiddeld tot hoog	Gemiddeld tot hoog
Kans op archeologische waarden	Middelhoog	Middelhoog tot hoog	Laag tot middelhoog	Laag tot middelhoog
Periode	Neolithicum tot en met Nieuwe Tijd	Middeleeuwen tot en met Nieuwe Tijd	IJzertijd tot en met Romeinse Tijd	IJzertijd tot en met Romeinse Tijd
Complextypen	Nederzetting, grafveld, landgebruik of –inrichting	Nederzetting, grafveld, landgebruik of –inrichting	Nederzetting, grafveld, landgebruik of –inrichting	Nederzetting, grafveld, landgebruik of –inrichting

Tabel 6: Gespecificeerde archeologische verwachting.

6 Conclusies en aanbevelingen

6.1 CONCLUSIES

Naar aanleiding van het vooronderzoek zijn de volgende conclusies te trekken.

1. Op het Pleistocene dekzand (Formatie van Boxtel) is bewoning mogelijk geweest tijdens het Paleolithicum en Mesolithicum. Bewoningssporen uit het Neolithicum tot en met de Bronstijd kunnen voorkomen op de Afzettingen van Calais (Wormer Laagpakket). Sporen van bewoning uit de IJzertijd en Romeinse Tijd kunnen worden aangetroffen in de top van het Hollandveen. Op de Afzettingen van Duinkerke II en III (Walcheren Laagpakket) kunnen sporen van bewoning uit de Middeleeuwen en Nieuwe Tijd worden aangetroffen, op de verlande kreekruggen die na de Romeinse Tijd zijn gevormd.
2. De top van de Afzettingen van Duinkerke bevindt zich in alle plangebieden onder de bouwvoor. Ook de top van het Pleistocene dekzand is in elk plangebied aanwezig, hetzij wel op grote diepte (meer dan 7 m –NAP). Afzettingen van Calais en het Hollandveen zijn niet in alle plangebieden aanwezig.
3. De geplande ontgravingsdiepte van 1,8 m –Mv maakt dat de Afzettingen van Duinkerke (Walcheren Laagpakket) het enige relevante archeologische niveau is voor de verwachting in elk gebied – en daarmee de bewoningsmogelijkheden in de Middeleeuwen en Nieuwe Tijd.
   Voor deze periode kan de archeologische verwachting per plangebied dan als volgt worden gesteld:
   a. Willem Anna Polder : middelhoog
   b. Kruiningen : hoog
   c. Rilland West : laag
   d. Rilland Oost : laag
4. Gezien de (gedeeltelijke) ligging op een getij-inversierug of -oeverwal geldt het risico van de ontgraving voor eventueel aanwezige archeologische resten alleen voor de plangebieden Willem Anna Polder en Kruiningen. De plangebieden Rilland West en Oost zullen tot de bedijking in 1856 te nat voor bewoning zijn geweest in Middeleeuwen en Nieuwe Tijd.

Concluderend heeft het onderzoek aangetoond, dat de geplande ontgraving van de kabelbedden tot een diepte van 1,8 m –Mv in de plangebieden Willem Anna Polder en Kruiningen mogelijk archeologische resten uit de Middeleeuwen en Nieuwe Tijd kan verstoren. Het is nog niet duidelijk in hoeverre en tot welke diepte er historische of recente verstoringen hebben plaatsgevonden.

6.2 ADVIES

Op basis van de resultaten van het bureauonderzoek adviseren wij om in de plangebieden Willem Anna Polder en Kruiningen archeologisch vervolgonderzoek uit te voeren binnen de daadwerkelijke verstoringsbreedte van de geplande kabelbedden, om de specifieke archeologische verwachting te toetsen en de mate van intactheid van de bodem te bepalen. Het verdient de aanbeveling om dit vervolgonderzoek uit te voeren in de vorm van een verkennend/karterend booronderzoek en een oppervlaktekartering. Voor de plangebieden Rilland West en Oost zijn op basis van de resultaten van dit bureauonderzoek geen redenen om vervolgonderzoek te adviseren.

Dit advies dient door de initiatiefnemer te worden voorgelegd aan het Bevoegd Gezag, in dit geval de Gemeente Kapelle en de Gemeente Reimerswaal. Het Bevoegd Gezag zal het advies beoordelen en kan van het door ARCADIS gegeven advies afwijken.

Bronnen

Archeologische kaarten en databestanden:

- Archeologisch Informatie Systeem II (Archis2), Rijksdienst voor Cultureel erfgoed (RCE), Amersfoort, 2007.
- www.ahn.nl
- www.ruimtelijkeplannen.nl
- www.watwaswaar.nl
- www.bodemloket.nl
- www.kapelle.nl
- www.reimerswaal.nl

Literatuur:

- Alkemade, M., R.M. van Heeringen & W.A.M. Hessing, 2011a. *Archeologiebeleid gemeente Kapelle, Deel A: Beleidsnota archeologie*, Vestigia rapport V705-A. Amersfoort.
- Alkemade, M., R.M. van Heeringen & W.A.M. Hessing, 2011b. *Archeologiebeleid gemeente Reimerswaal, Deel A: Beleidsnota archeologie*, Vestigia rapport V707-A. Amersfoort.
- Bakker, H. de, 1966. *De subgroepen van het systeem voor bodemclassificatie voor Nederland*. In: Boor en Spade.
- Bakker, H. de en J. Schelling, 1989. *Systeem van bodemclassificatie voor Nederland. De hogere niveaus.* Wageningen.
- Berendsen, H.J.A., 2005. *Landschappelijk Nederland.* Assen (Fysische Geografie van Nederland). Derde, geheel herziene druk.
- Berendsen, H.J.A., 2004. *De vorming van het land.* Assen (Fysische geografie van Nederland). Vierde, geheel herziene druk.
- Brugman, B.A., R.M. van Heeringen & R. Schrijvers, 2011a. *Archeologiebeleid gemeente Kapelle, Deel B: Toelichting beleidskaart*, Vestigia rapport V705-B. Amersfoort.
- Brugman, B.A., R.M. van Heeringen & R. Schrijvers, 2011b. *Archeologiebeleid gemeente Reimerswaal, Deel B: Toelichting beleidskaart*, Vestigia rapport V707-B. Amersfoort.
- Groot, R. de & S. Warning, 2010. *Aardgasleiding Zuid-Beveland, gemeentes Reimerswaal, Kapelle en Borsele; een archeologische begeleiding*, RAAP-rapport 1815.
- Hijma, M.P., 2005. *Kapelle Donkerewegje - Rijksweg N289 - Zuidhoeksebaantje, toponiem Kapelle-Zuid - Biezelinge-West. Inventariserend archeologisch veldonderzoek. Karterende fase*, BAAC-rapport 05.072.
- Jansen, B., 2003. *Plangebied Smokkelhoek, gemeente Kapelle; een inventariserend archeologisch onderzoek*, RAAP-rapport 929.
- Jong, de, J. & R. Evelein, 2012. MER hoogspanningsverbinding Zuid-West 380 kV Achtergronddocument Archeologie, Utrecht/Woerden.
- Mulder, E.F.J., M.C. Geluk, I.L. Ritsema, W.E. Westerhoff en T.E. Wong, 2003. *De ondergrond van Nederland.* Houten.
- Vos, P.C., J. Bazelmans, H.J.T. Weerts & M.J. van der Meulen (red.), 2011. *Atlas van Nederland in het Holoceen.* Amsterdam.
- Vos, P.C. & R.M. van Heeringen, 1997. *Holocene geology and the occupation history of the Province of Zeeland (SW Netherlands),* Mededelingen Rijks Geologische Dienst, Haarlem.

Bijlage 1

Bijlage 1.1 Nieuwe situatie, Willem Anna Polder

Bijlage 1.2 Nieuwe situatie, Kruiningen

Bijlage 1.3 Nieuwe situatie, Rilland West

Bijlage 1.4 Nieuwe situatie, Rilland Oost

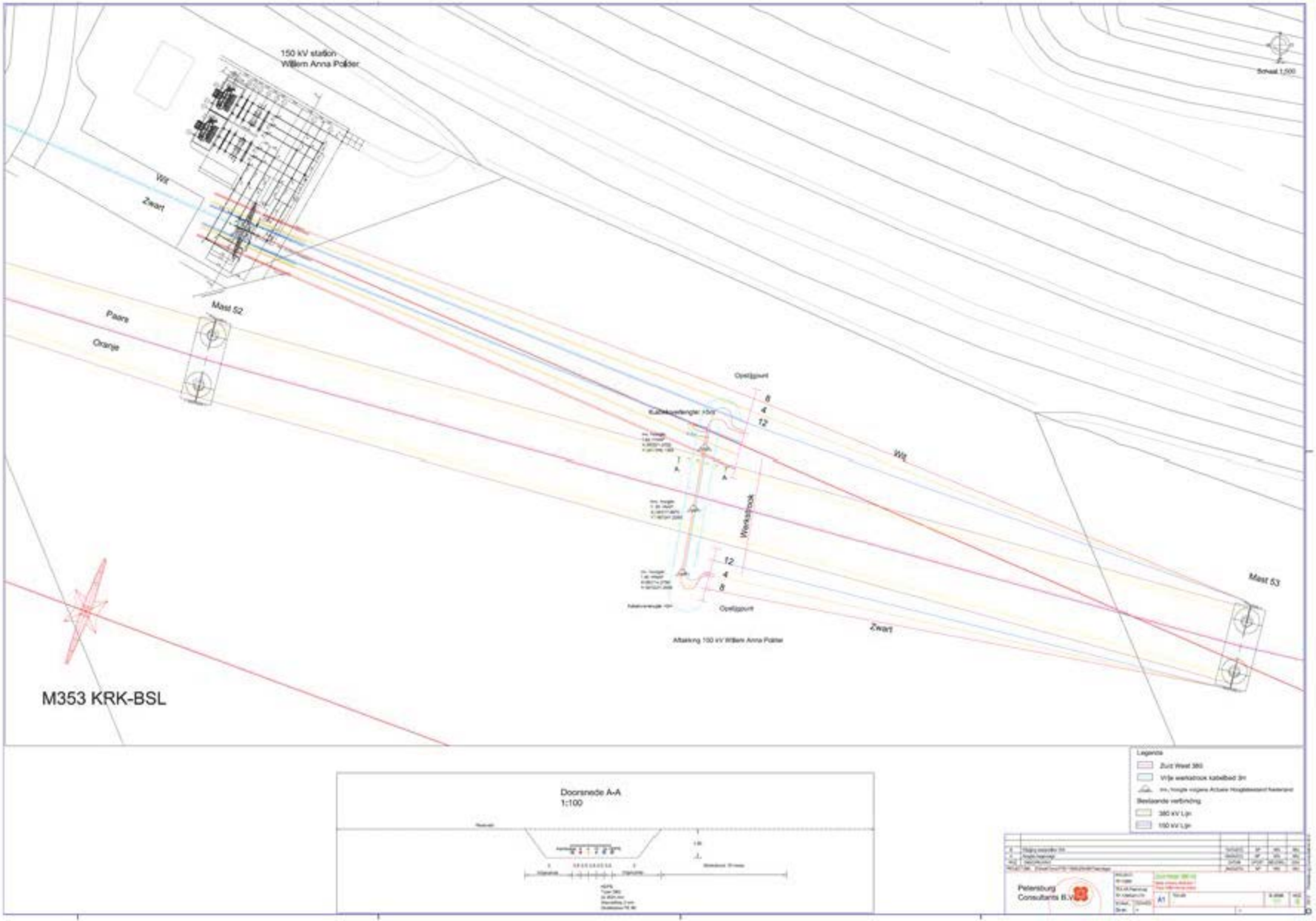
150 kV station
Willem Anna Polder
Wit
Zwart
Mast 52
Paars
Oranje
Opstijgpunt
8
4
12
Werkstrook
Wit
Mast 53
Zwart
Aftakking 150 kV Willem Anna Polder
M353 KRK-BSL
Doorsnede A-A
1:100
Legenda
Zuid West 380
Vrije werkstrook kabelbed 3m
Bestaande verbinding
380 kV Lijn
150 kV Lijn
Petersburg
Consultants B.V.
A1

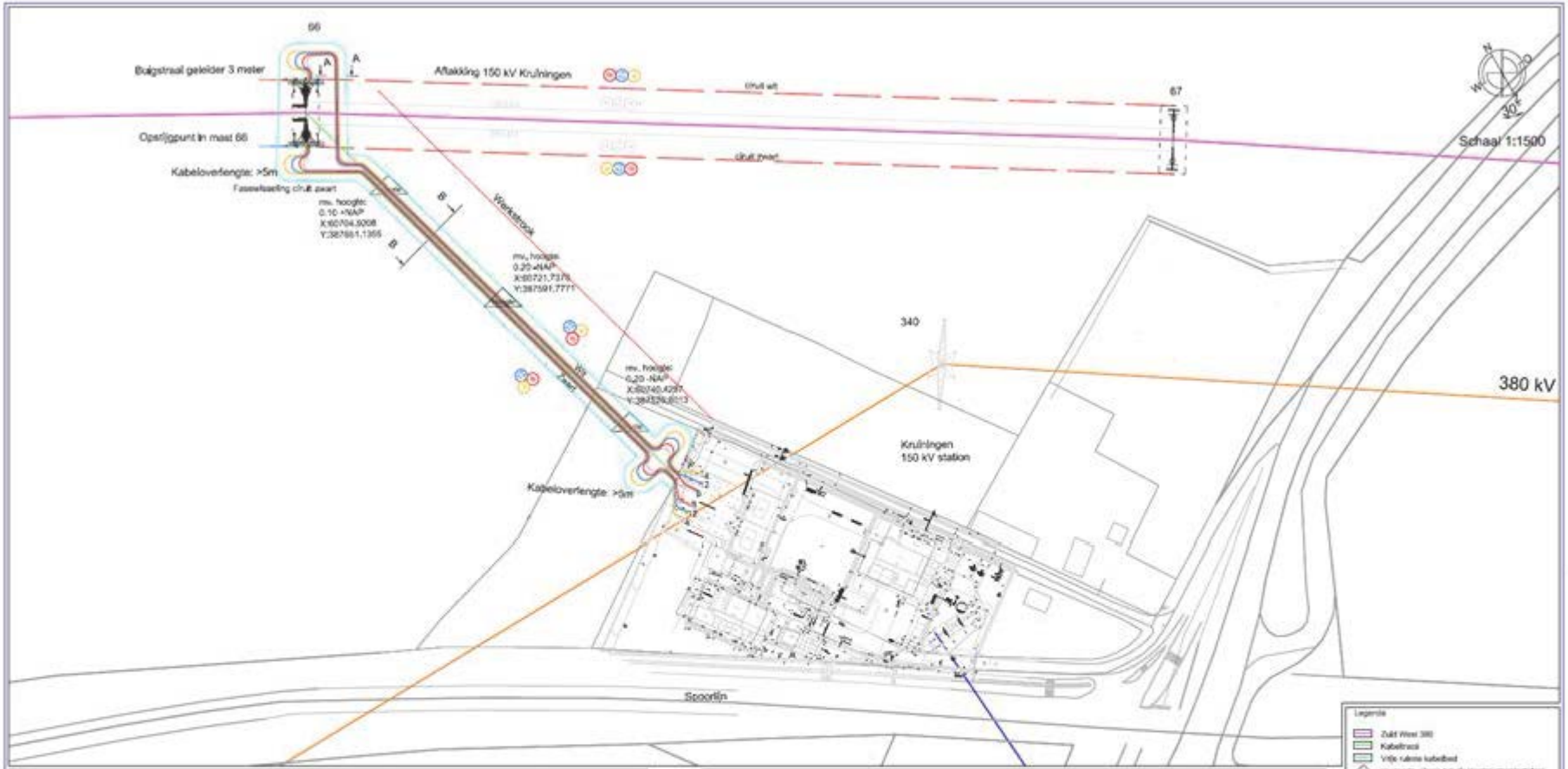

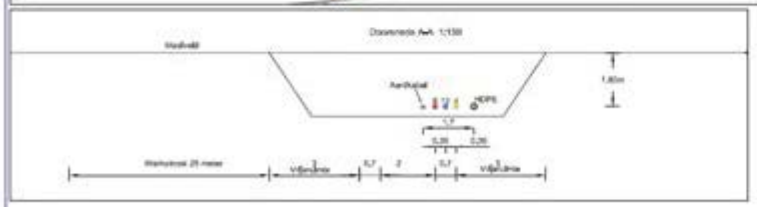

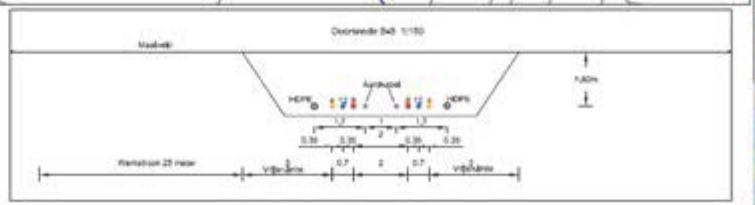

E	Wijziging overlengte kabels	15-11-2012	MP	ARo	ARo
D	Wijziging kabelconfiguratie kabelbed	23-10-2012	MP	ARo	ARo
C	Kabeltrack aangepast aan de wijziging VKA	15-10-2012	MP	AR	AR
B	Aardkabel toegevoegd	23-08-2012	MP	AR	AR
WIJZ	OMSCHRIJVING	DATUM	OPGST.	BEOORD.	GGK.
PROJECT DIR:Z:\Werk\Tenne\TE113900-ZW-380\Tekeningen		09-08-2012	MP	ARo	ARo

Petersburg Consultants B.V.

PROJECT: TE113900

TEK.NR.Petersburg: TE113900-D2-T09

SCHAAL: Zie tek.

EENHEID: m

Zuid West 380 kV
Track tekening deeltrack 2
Track tekening Kruiningen

A3

TEK.NR. -

BLADNR. 1/1

WIJZ. E

© 2012 Petersburg Consultants B.V.

Schaal 1:1500

150 kV Station
Kreekrak- Rilland

002

380kV lijn Geertruidenberg- Kimpen

mv. hoogte:
0,30 =NAP
X:73873,8484
Y:382459,3465

Bos

mv. hoogte:
1,10 =NAP
X:74015,2966
Y:382459,9385

mv. hoogte:
0,90 =NAP
X:74153,1555
Y:382474,2877

Aftakking 150 kV Rilland

mv. hoogte:
0,60 =NAP
X:73683,7925
Y:382447,3301

Wit

Zwart

Pensing
pensing nader uit te
werken.

Kabeloverlengte:>5m

Werkstrook

Fasewisseling
circuit wit

mv. hoogte:
0,50 =NAP
X:73524,5101
Y:382402,7813

Circuit wit

Circuit zwart

Detail A

Opstiggpunt mast 104

003

Weiland

Weiland

Nieuw Hoogspanningsstation

380 kV kreekrak- Borssele

304N

380kV lijn Geertruidenberg- Zandvliet

380kV lijn Borssele- Zandvliet

Detail A
Schaal 1:400

Kabeloverlengte:>5m

Kabeloverlengte:>5m

Doorsnede
A-A 1:80

Maaiveld

Aardkabel

Werkstrook 25 meter

Doorsnede
B-B 1:80

Maaiveld

Aardkabel

Werkstrook 25 meter

Legenda

- Zuid West 380
- Kabeltrace Rilland
- Vrije ruimte kabelbed
- 380 kV lijn Kreekrak - Borssele
- Punt pensing
- mv. hoogte volgens Actueel Hoogtebestand Nederland

Bestaande verbinding

- 380 kV Lijn
- 150 kV Lijn

C	Kopjes verlengde kabels	18-11-2013	GP		
B	Kopjes en de markeurs aan de rot.	18-10-2013	GP	MIJ	MIJ
A	Aanbeval (eerste)	24-06-2013	GP	MT	KR
REV	OMSCHRIJVING	DATUM	GECOT	GECONTR	GOK
PROJECT 24	Z-West lijnen 1TC1-1380 ZR 380 Meetlijnen	24-06-2013	GP	MIJ	MIJ

Petersburg
Consultants B.V.

PROJECT	Zuid West 380 kV		
TE 1380	Aftak Rilland Aardkabel		
TE/AR Petersburg	Aftak Rilland Tracé		
TE 1380-22-TC	A1	TEKNR.	BLADNR. 1/1 / BLZ 0
SCHAAL 1:1500	GEMAAKT GP		
24-06	0		

150 kV Station
Kreekrak- Rilland

002

Kabeloverlengte:>5m

Wil

Zwart

mv. hoogte: 1.10 +NAP
X:74332.3359
Y:382468.3164

Persing

mv. hoogte: 1.00 +NAP
X:74334.2197
Y:382382.4427

003

106

Kabeloverlengte:>5m

Legenda

- Zuid West 380
- Kabeltracé Rilland-Oost
- Vrije ruimte kabelbed
- 380 kV lijn Kreekrak - Borssele
- Persing/Boorpunt
- mv. hoogte volgens Actueele Hoogtebestand Nederland

Bestaande verbinding

- 380 kV Lijn
- 150 kV Lijn

Doorsnede
A=A 1:100

Doorsnede
B=B 1:100

Petersburg Consultants B.V.

A1

Bijlage 2

Bijlage 2.1 Maatregelenkaarten, Willem Anna Polder

Bijlage 2.2 Maatregelenkaarten, Kruiningen

Bijlage 2.3 Maatregelenkaarten, Rilland Oost en West

LEGENDA

Gemeentegrens

Afzonderlijke beleidskaart van toepassing

Maatregelcategorieën

Categorie 1 (wettelijk beschermd monument)

Categorie 2 (terreinen van archeologische waarde)

Categorie 3 (gewaardeerde stads-/dorpskern)

Categorie 4 (hoge verwachting)

Categorie 5 (gematigde verwachting)

Categorie 6 (lage verwachting)

Categorie 7 (waterbodem)

Categorie 8 (geen verwachting)

Plangebied (indicatief)

1. Kaartlaag 1, 'Walcheren'
2. Kaartlaag 2, 'Hollandveen'
3. Kaartlaag 3, 'Wormer'
4. Kaartlaag 4, 'Pleistoceen'

LEGENDA

- Gemeentegrens
- Afzonderlijke beleidskaart van toepassing

Maatregelcategorieën

- Categorie 1 (wettelijk beschermd monument)
- Categorie 2 (terreinen van archeologische waarde)
- Categorie 3 (gewaardeerde stads-/dorpskern)
- Categorie 4 (hoge verwachting)
- Categorie 5 (gematigde verwachting)
- Categorie 6 (lage verwachting)
- Categorie 7 (waterbodem)
- Categorie 8 (geen verwachting)

Plangebied (indicatief)

1. Kaartlaag 1, 'Walcheren'
2. Kaartlaag 2, 'Hollandveen'
3. Kaartlaag 3, 'Wormer'
4. Kaartlaag 4, 'Pleistoceen'

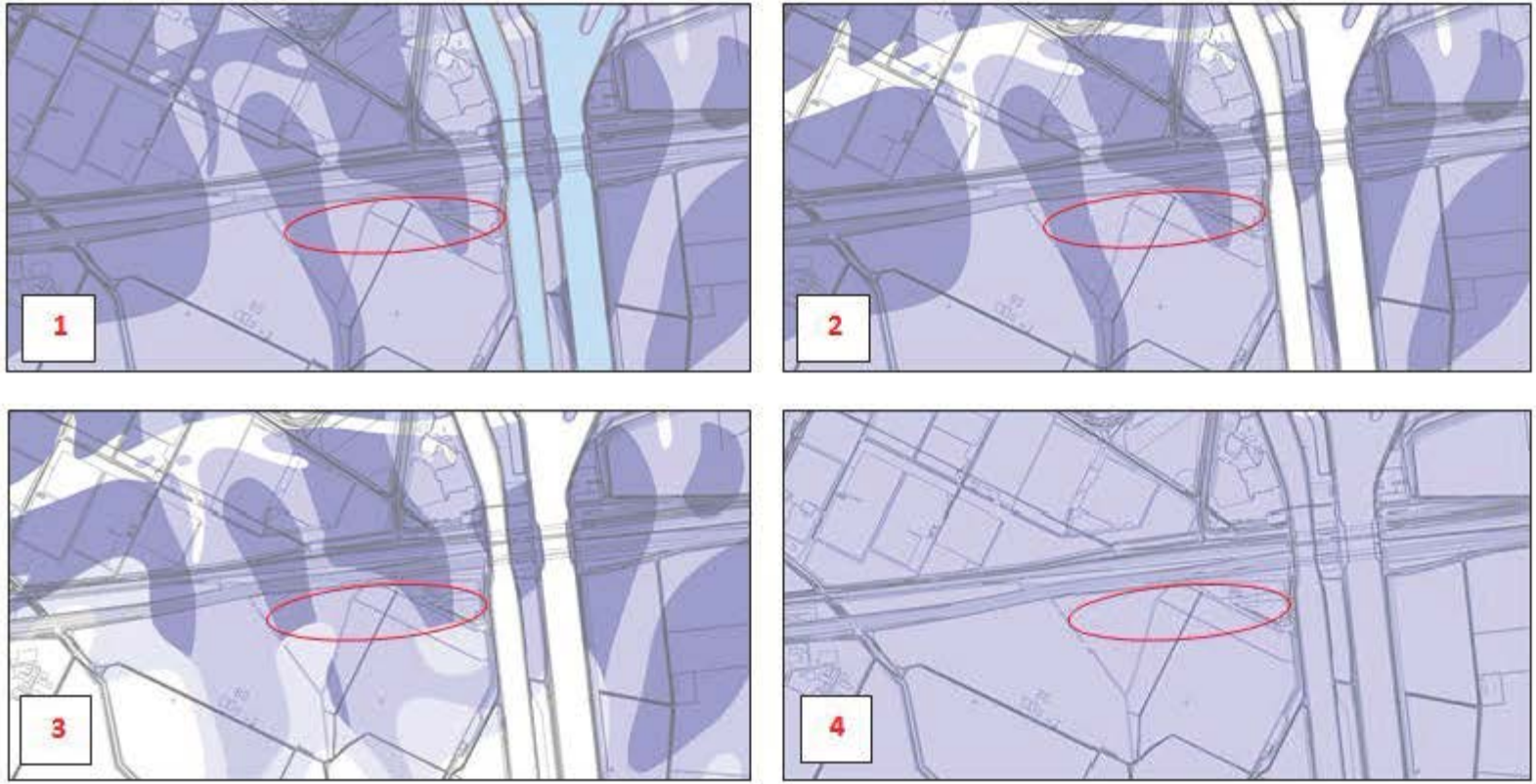

LEGENDA

Gemeentegrens

Afzonderlijke beleidskaart van toepassing

Maatregelcategorieën

Categorie 1 (wettelijk beschermd monument)

Categorie 2 (terreinen van archeologische waarde)

Categorie 3 (gewaardeerde stads-/dorpskern)

Categorie 4 (hoge verwachting)

Categorie 5 (gematigde verwachting)

Categorie 6 (lage verwachting)

Categorie 7 (waterbodem)

Categorie 8 (geen verwachting)

Plangebied (indicatief)

1. Kaartlaag 1, 'Walcheren'
2. Kaartlaag 2, 'Hollandveen'
3. Kaartlaag 3, 'Wormer'
4. Kaartlaag 4, 'Pleistoceen'

Bijlage 3

Bijlage 3.1 Geomorfologische kaart, overzicht

Bijlage 3.2 Geomorfologische kaart, Willem Anna Polder

Bijlage 3.3 Geomorfologische kaart, Kruiningen

Bijlage 3.4 Geomorfologische kaart, Rilland West en Oost

Geomorfologische kaart

Overzicht (WAP, Kruiningen, Rilland West en Oost)

02-01-2013

76323 / 394853

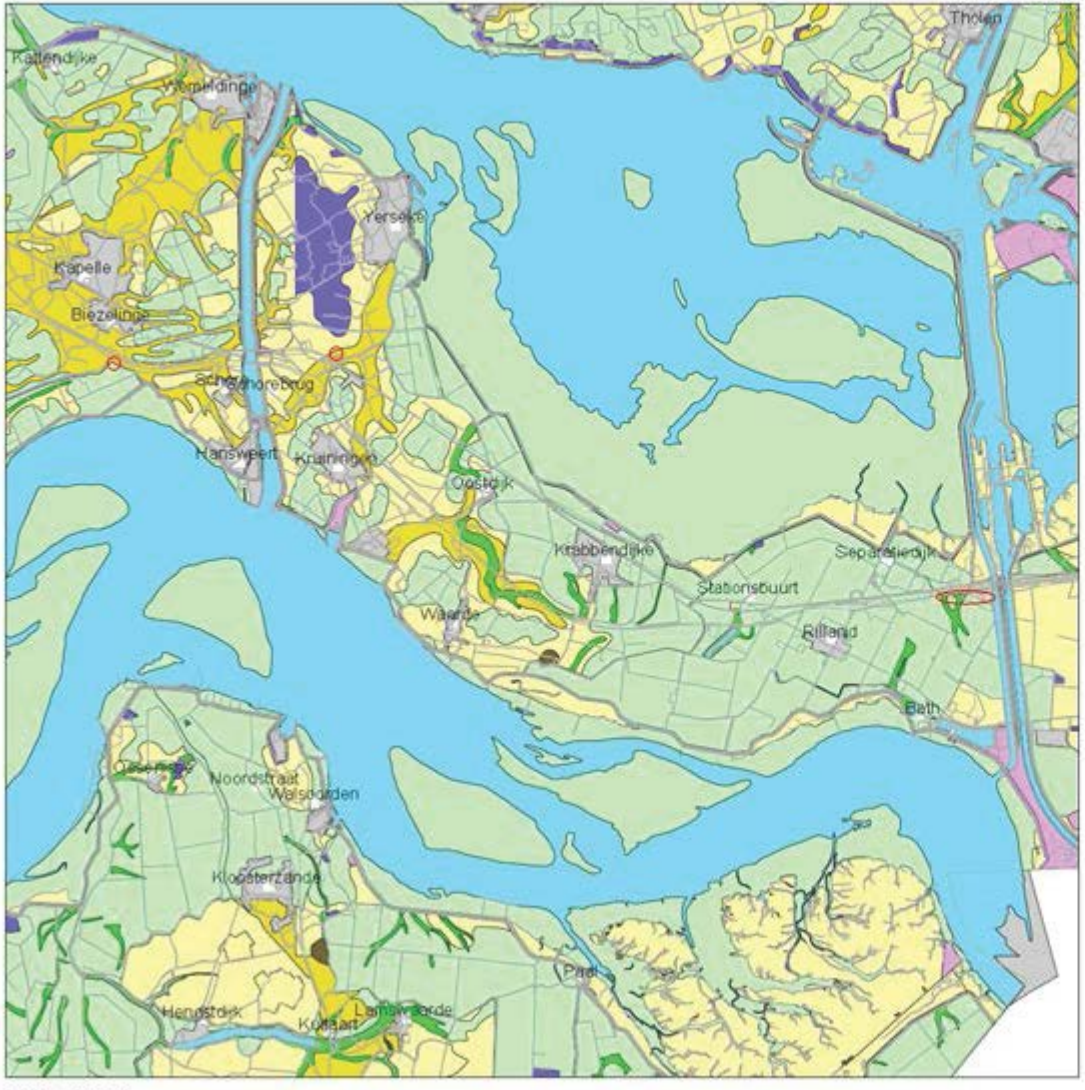

53938 / 372468

Legenda

TOP50_CBS ((c)CBS)

PLAATSNAMEN

GEOMORFOLOGIE ((c)Alterra)

- Wanden
- Hoge heuvels en ruggen
- Terpen
- Hoge duinen
- Plateaus
- Terrassen
- Plateau-achtige vormen
- Waaiervormige glooiingen
- Niet-waaiervormige glooiingen
- Lage ruggen en heuvels
- Welvingen
- Vlakten
- Laagten
- Ondiepe dalen
- Matig diepe dalen
- Diepe dalen
- Water
- Bebouwing
- Overig (Dijken etc)

Plangebieden (indicatief)

0 5 km

N

Archis2

Rijksdienst voor het Cultureel Erfgoed
Ministerie van Onderwijs, Cultuur en Wetenschap

Geomorfologische kaart

Willem Anna Polder (WAP)

02-01-2013

58401 / 389615

53924 / 385138

Legenda

HUIZEN

TOP10 ((c)TDN)

PLAATSNAMEN

GEOMORFOLOGIE ((c)Alterra)

- Wanden
- Hoge heuvels en ruggen
- Terpen
- Hoge duinen
- Plateaus
- Terrassen
- Plateau-achtige vormen
- Waaiervormige glooiingen
- Niet-waaiervormige glooiingen
- Lage ruggen en heuvels
- Welvingen
- Vlakten
- Laagten
- Ondiepe dalen
- Matig diepe dalen
- Diepe dalen
- Water
- Bebouwing
- Overig (Dijken etc)

Plangebied (indicatief)

0 1 km

N

Archis2

Rijksdienst voor het Cultureel Erfgoed
Ministerie van Onderwijs, Cultuur en Wetenschap

Geomorfologische kaart

Kruiningen

02-01-2013

62924 / 389816

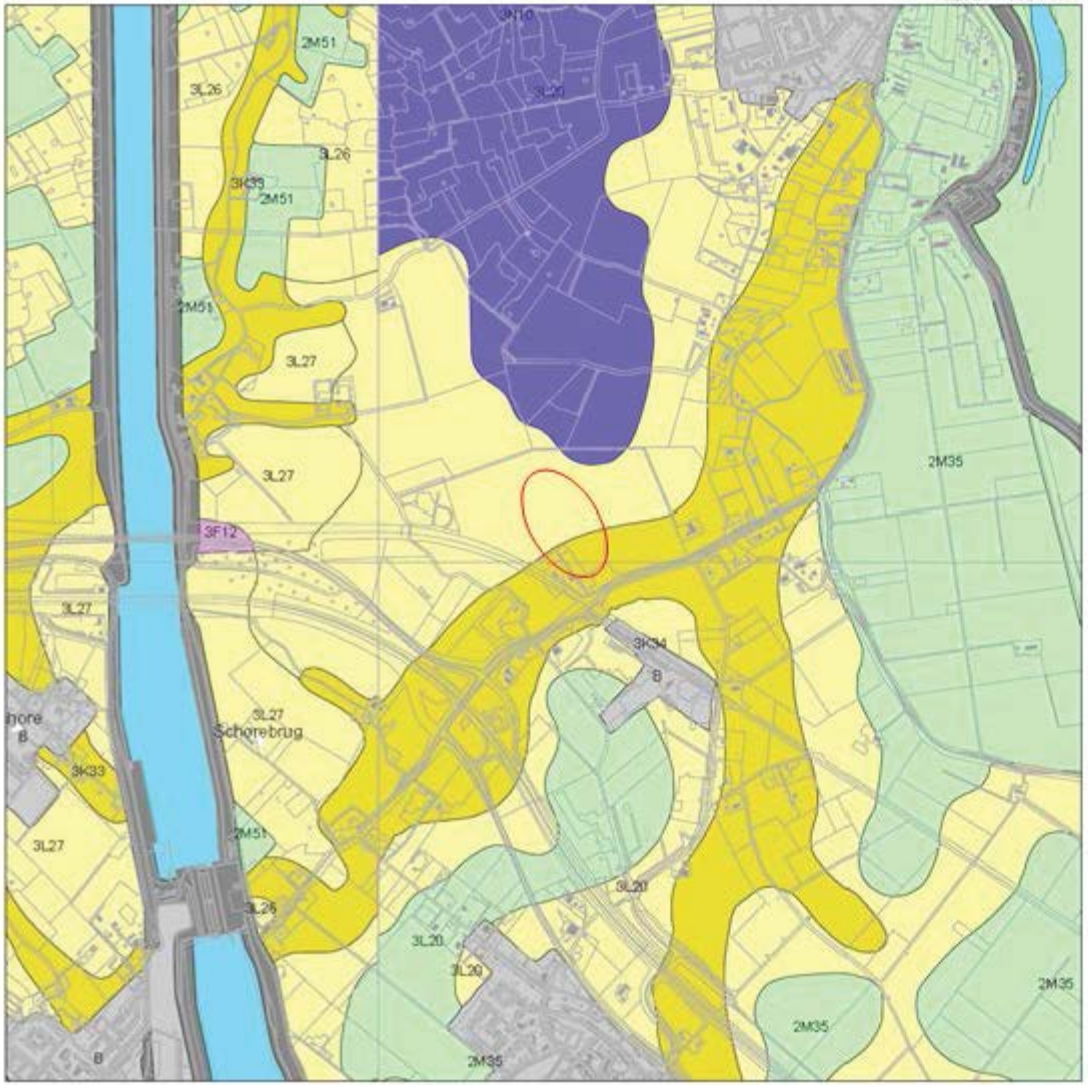

58447 / 385339

Legenda

- HUIZEN
- TOP10 ((c)TDN)
- PLAATSNAMEN

GEOMORFOLOGIE ((c)Alterra)

- Wanden
- Hoge heuvels en ruggen
- Terpen
- Hoge duinen
- Plateaus
- Terrassen
- Plateau-achtige vormen
- Waaiervormige glooiingen
- Niet-waaiervormige glooiingen
- Lage ruggen en heuvels
- Welvingen
- Vlakten
- Laagten
- Ondiepe dalen
- Matig diepe dalen
- Diepe dalen
- Water
- Bebouwing
- Overig (Dijken etc)

Plangebied (indicatief)

0 1 km

N

Archis2

Rijksdienst voor het Cultureel Erfgoed
Ministerie van Onderwijs, Cultuur en Wetenschap

Geomorfologische kaart

Rilland West en Oost

02-01-2013

76013 / 384710

71535 / 380233

Legenda

- HUIZEN
- TOP10 ((c)TDN)
- PLAATSNAMEN

GEOMORFOLOGIE ((c)Alterra)

- Wanden
- Hoge heuvels en ruggen
- Terpen
- Hoge duinen
- Plateaus
- Terrassen
- Plateau-achtige vormen
- Waaiervormige glooiingen
- Niet-waaiervormige glooiingen
- Lage ruggen en heuvels
- Welvingen
- Vlakten
- Laagten
- Ondiepe dalen
- Matig diepe dalen
- Diepe dalen
- Water
- Bebouwing
- Overig (Dijken etc)

Plangebied (indicatief)

0 — 1 km

N

Archis2

Rijksdienst voor het Cultureel Erfgoed
Ministerie van Onderwijs, Cultuur en Wetenschap

Bijlage 4

Bijlage 4.1 Actueel Hoogtebestand Nederland 2 (AHN2), overzicht

Bijlage 4.2 Actueel Hoogtebestand Nederland 2 (AHN2), Willem Anna Polder (WAP)

Bijlage 4.3 Actueel Hoogtebestand Nederland 2 (AHN2), Kruiningen

Bijlage 4.4 Actueel Hoogtebestand Nederland 2 (AHN2), Rilland

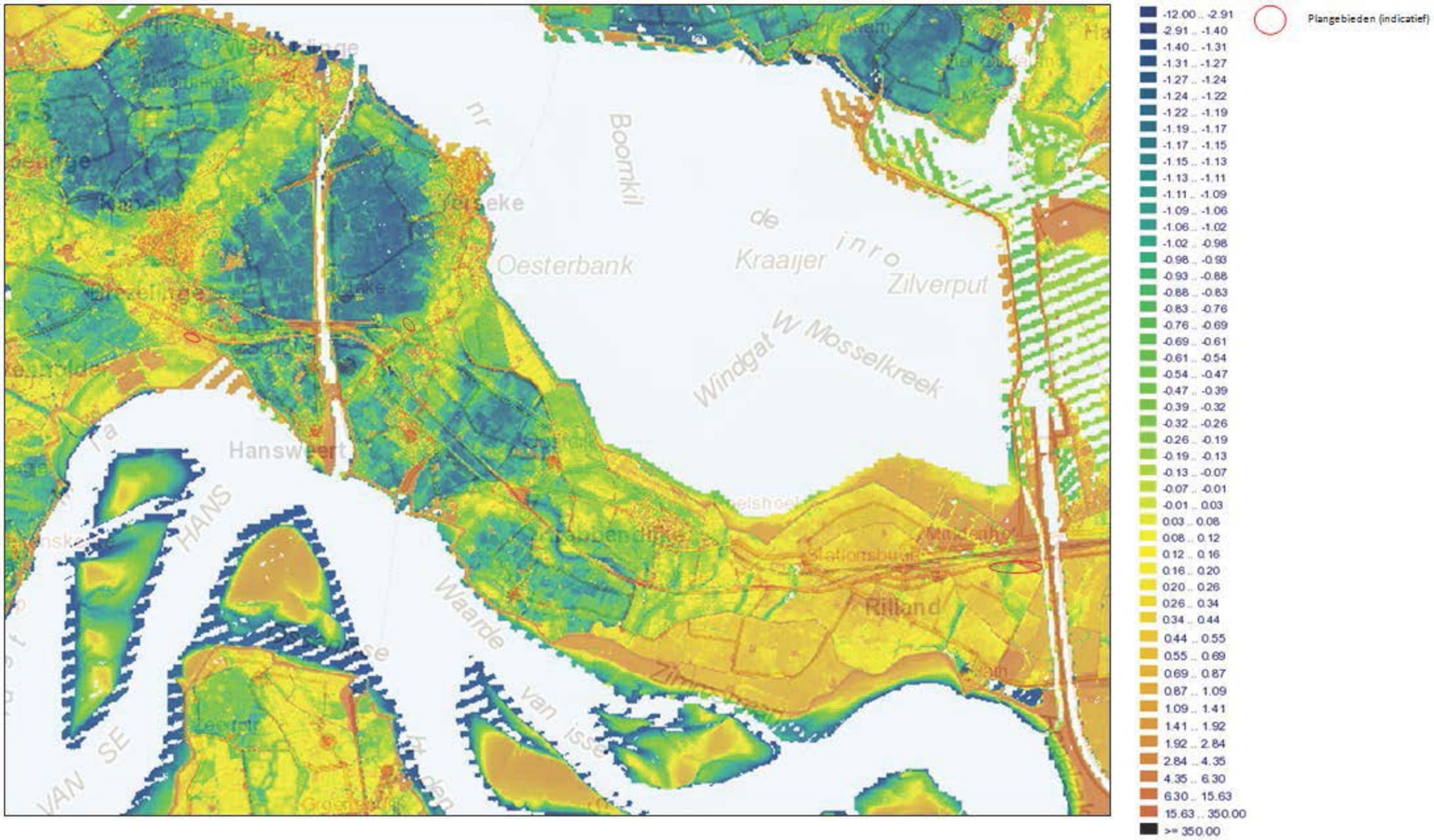

Plangebieden (indicatief)
-12.00 .. -2.91
-2.91 .. -1.40
-1.40 .. -1.31
-1.31 .. -1.27
-1.27 .. -1.24
-1.24 .. -1.22
-1.22 .. -1.19
-1.19 .. -1.17
-1.17 .. -1.15
-1.15 .. -1.13
-1.13 .. -1.11
-1.11 .. -1.09
-1.09 .. -1.06
-1.06 .. -1.02
-1.02 .. -0.98
-0.98 .. -0.93
-0.93 .. -0.88
-0.88 .. -0.83
-0.83 .. -0.76
-0.76 .. -0.69
-0.69 .. -0.61
-0.61 .. -0.54
-0.54 .. -0.47
-0.47 .. -0.39
-0.39 .. -0.32
-0.32 .. -0.26
-0.26 .. -0.19
-0.19 .. -0.13
-0.13 .. -0.07
-0.07 .. -0.01
-0.01 .. 0.03
0.03 .. 0.08
0.08 .. 0.12
0.12 .. 0.16
0.16 .. 0.20
0.20 .. 0.26
0.26 .. 0.34
0.34 .. 0.44
0.44 .. 0.55
0.55 .. 0.69
0.69 .. 0.87
0.87 .. 1.09
1.09 .. 1.41
1.41 .. 1.92
1.92 .. 2.84
2.84 .. 4.35
4.35 .. 6.30
6.30 .. 15.63
15.63 .. 350.00
>= 350.00
Boomkil
Oesterbank
de
Kraaijer
inro
Zilverput
Windgat
W Mosselkreek
Hansweert
Rilland
Waarde
van

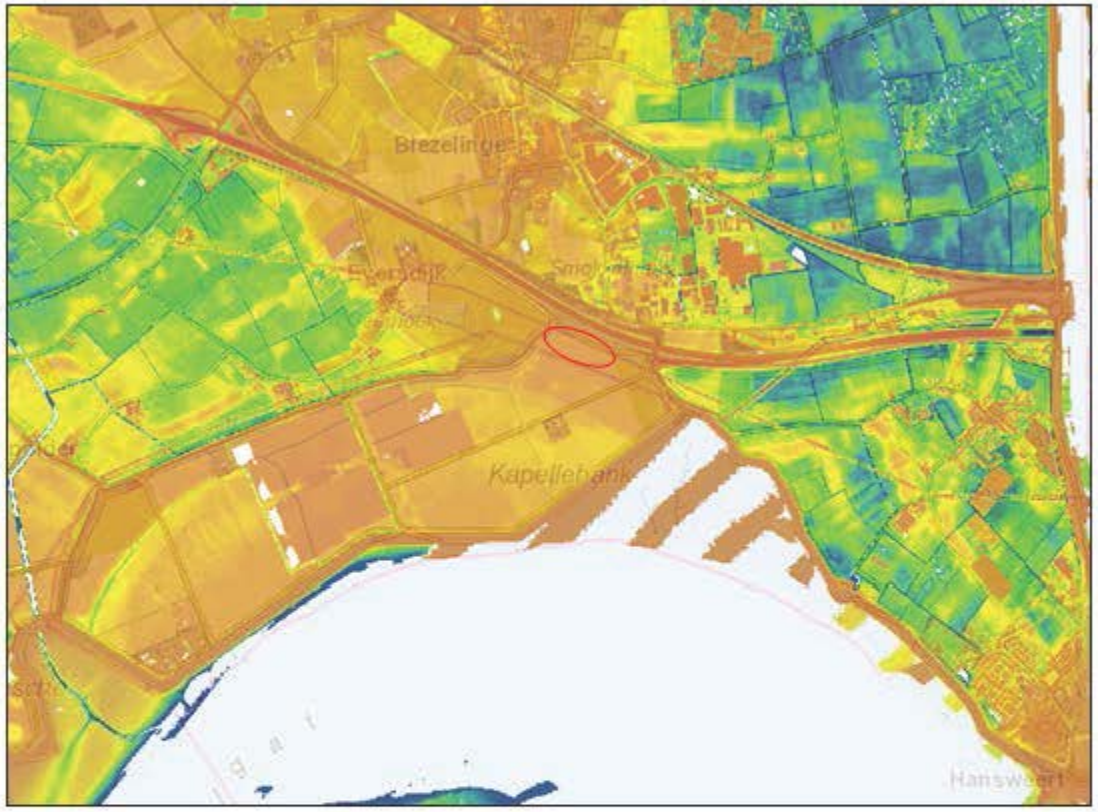

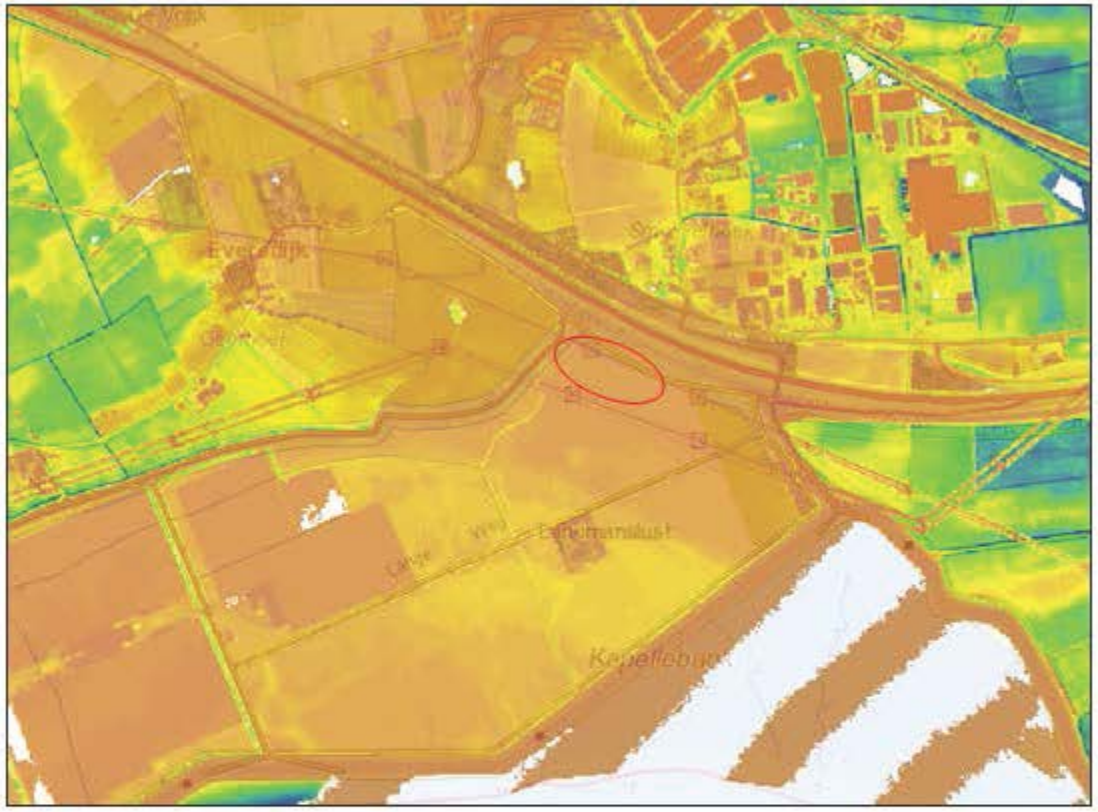

-12.00 .. -2.91
-2.91 .. -1.40
-1.40 .. -1.31
-1.31 .. -1.27
-1.27 .. -1.24
-1.24 .. -1.22
-1.22 .. -1.19
-1.19 .. -1.17
-1.17 .. -1.15
-1.15 .. -1.13
-1.13 .. -1.11
-1.11 .. -1.09
-1.09 .. -1.06
-1.06 .. -1.02
-1.02 .. -0.98
-0.98 .. -0.93
-0.93 .. -0.88
-0.88 .. -0.83
-0.83 .. -0.76
-0.76 .. -0.69
-0.69 .. -0.61
-0.61 .. -0.54
-0.54 .. -0.47
-0.47 .. -0.39
-0.39 .. -0.32
-0.32 .. -0.26
-0.26 .. -0.19
-0.19 .. -0.13
-0.13 .. -0.07
-0.07 .. -0.01
-0.01 .. 0.03
0.03 .. 0.08
0.08 .. 0.12
0.12 .. 0.16
0.16 .. 0.20
0.20 .. 0.26
0.26 .. 0.34
0.34 .. 0.44
0.44 .. 0.55
0.55 .. 0.69
0.69 .. 0.87
0.87 .. 1.09
1.09 .. 1.41
1.41 .. 1.92
1.92 .. 2.84
2.84 .. 4.35
4.35 .. 6.30
6.30 .. 15.63
15.63 .. 350.00
>= 350.00

Plangebied (indicatief)

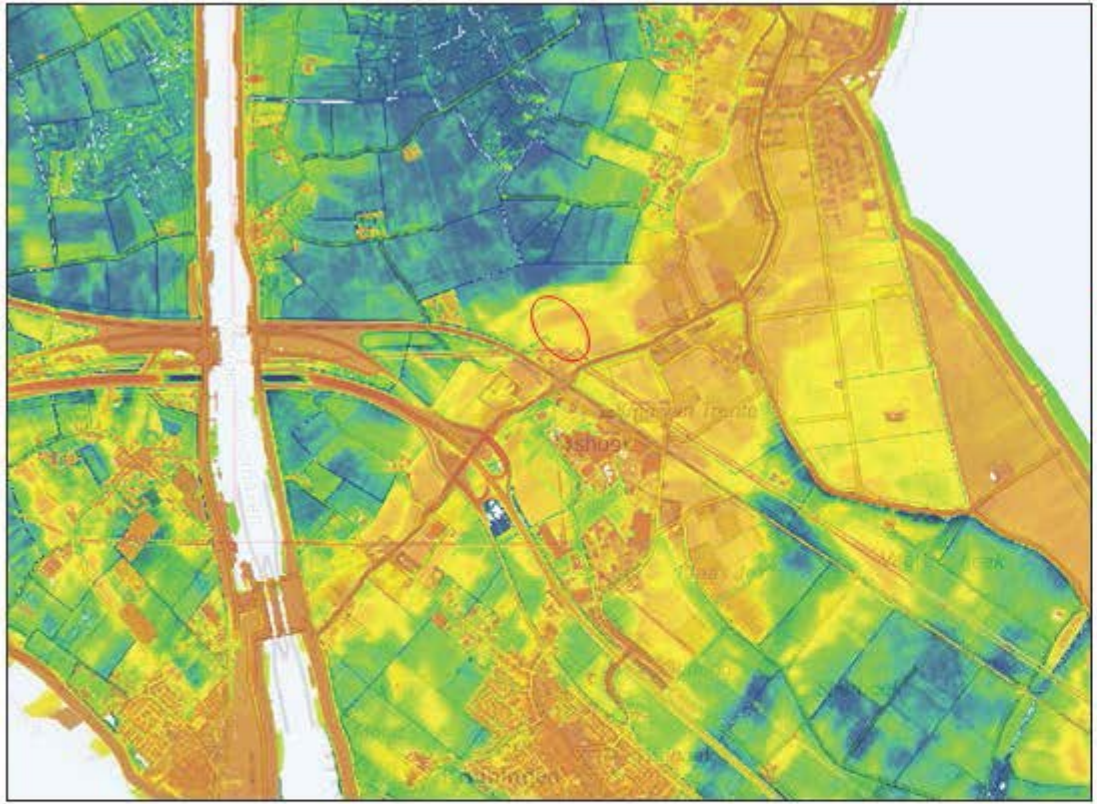

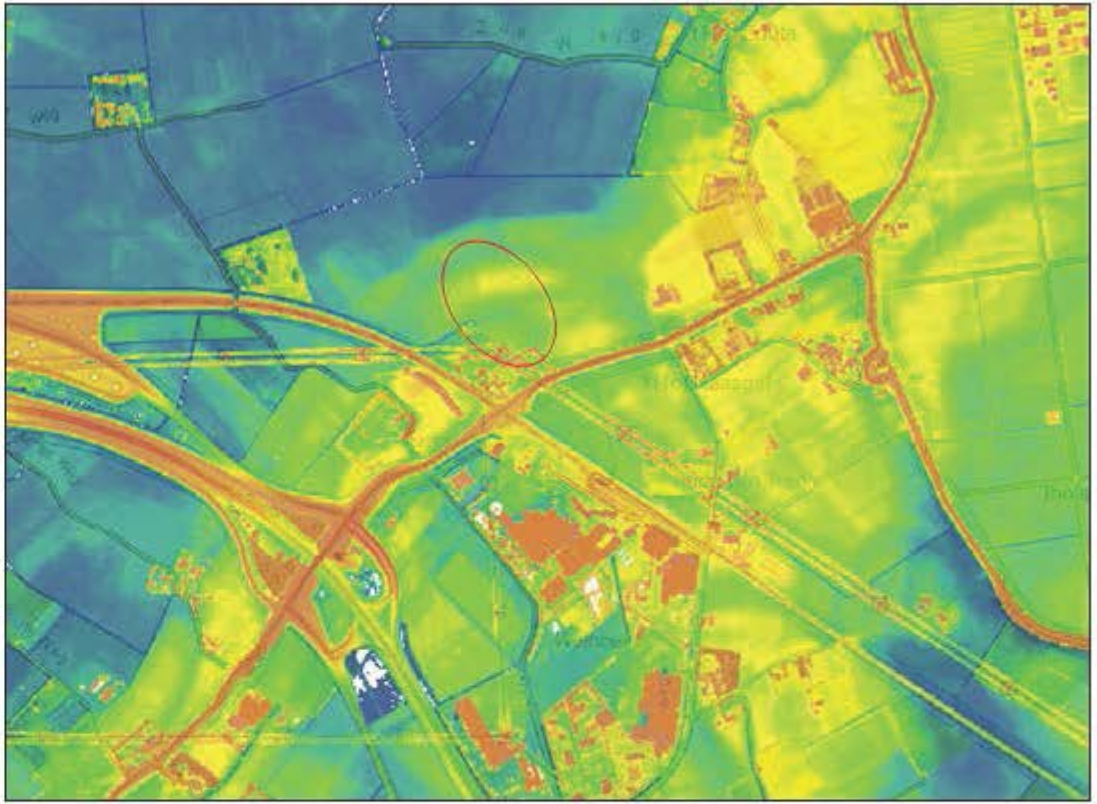

-12.00 .. -2.91
-2.91 .. -1.40
-1.40 .. -1.31
-1.31 .. -1.27
-1.27 .. -1.24
-1.24 .. -1.22
-1.22 .. -1.19
-1.19 .. -1.17
-1.17 .. -1.15
-1.15 .. -1.13
-1.13 .. -1.11
-1.11 .. -1.09
-1.09 .. -1.06
-1.06 .. -1.02
-1.02 .. -0.98
-0.98 .. -0.93
-0.93 .. -0.88
-0.88 .. -0.83
-0.83 .. -0.76
-0.76 .. -0.69
-0.69 .. -0.61
-0.61 .. -0.54
-0.54 .. -0.47
-0.47 .. -0.39
-0.39 .. -0.32
-0.32 .. -0.26
-0.26 .. -0.19
-0.19 .. -0.13
-0.13 .. -0.07
-0.07 .. -0.01
-0.01 .. 0.03
0.03 .. 0.08
0.08 .. 0.12
0.12 .. 0.16
0.16 .. 0.20
0.20 .. 0.26
0.26 .. 0.34
0.34 .. 0.44
0.44 .. 0.55
0.55 .. 0.69
0.69 .. 0.87
0.87 .. 1.09
1.09 .. 1.41
1.41 .. 1.92
1.92 .. 2.84
2.84 .. 4.35
4.35 .. 6.30
6.30 .. 15.63
15.63 .. 350.00
>= 350.00

Plangebied (indicatief)

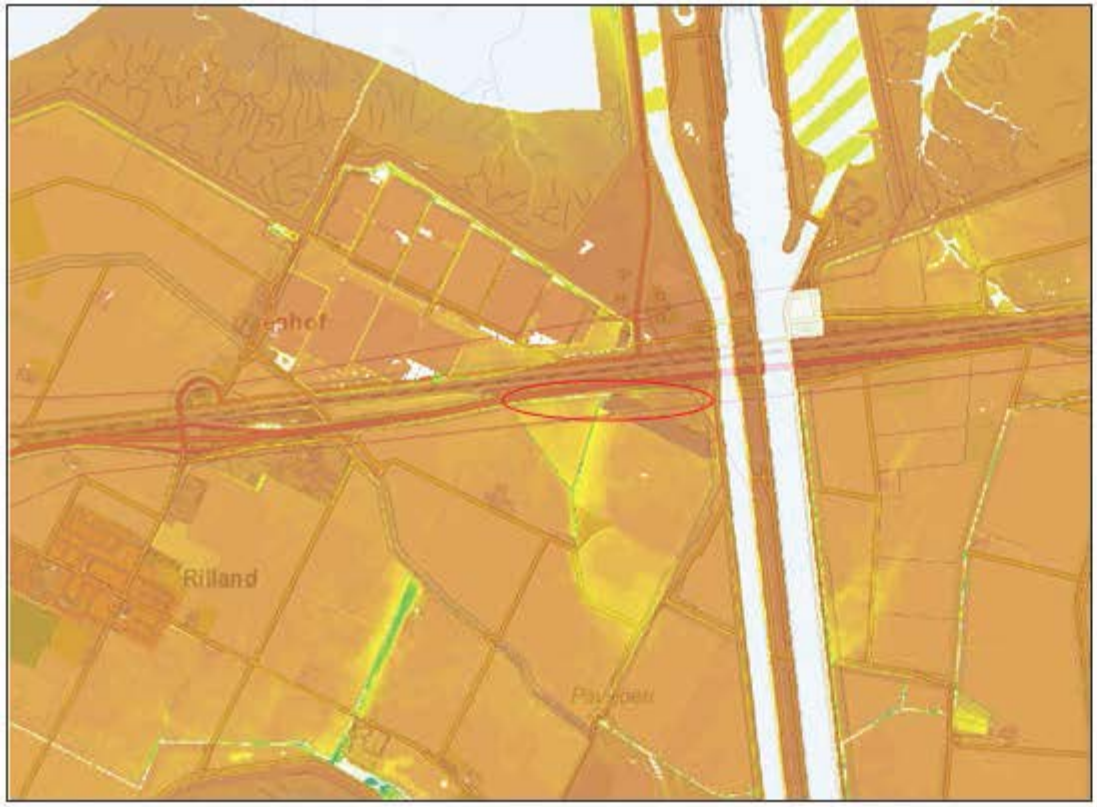

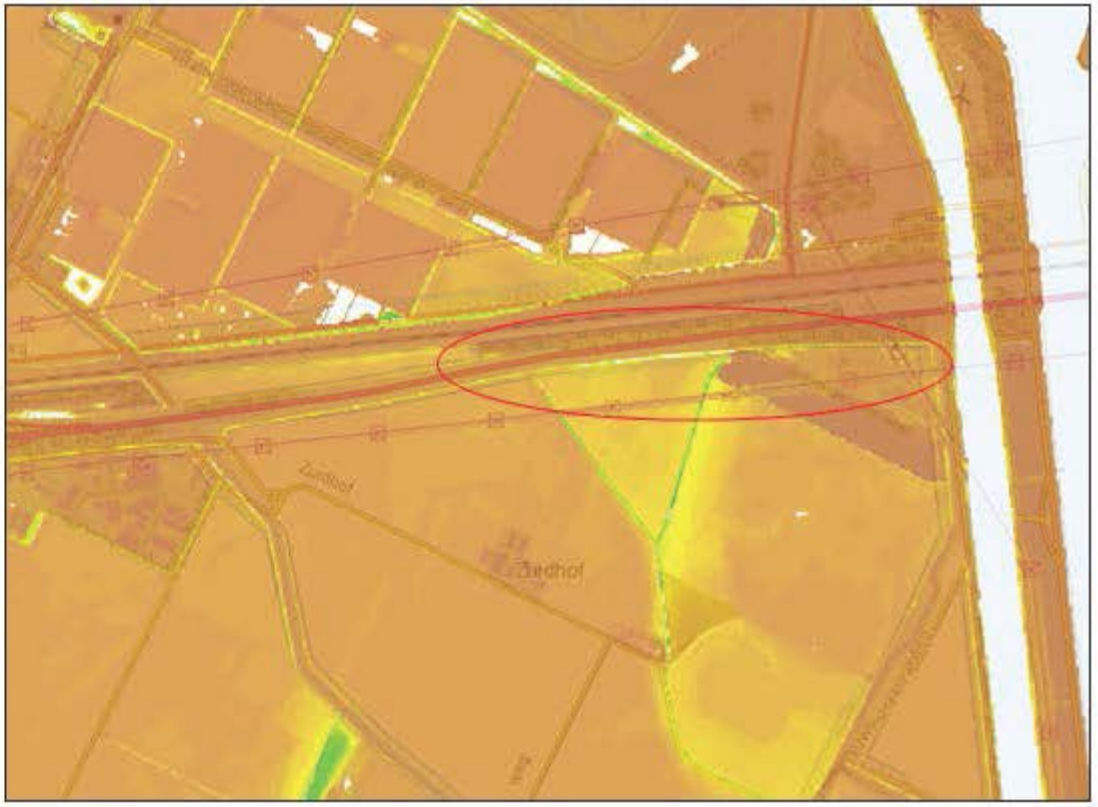

-12.00 .. -2.91
-2.91 .. -1.40
-1.40 .. -1.31
-1.31 .. -1.27
-1.27 .. -1.24
-1.24 .. -1.22
-1.22 .. -1.19
-1.19 .. -1.17
-1.17 .. -1.15
-1.15 .. -1.13
-1.13 .. -1.11
-1.11 .. -1.09
-1.09 .. -1.06
-1.06 .. -1.02
-1.02 .. -0.98
-0.98 .. -0.93
-0.93 .. -0.88
-0.88 .. -0.83
-0.83 .. -0.76
-0.76 .. -0.69
-0.69 .. -0.61
-0.61 .. -0.54
-0.54 .. -0.47
-0.47 .. -0.39
-0.39 .. -0.32
-0.32 .. -0.26
-0.26 .. -0.19
-0.19 .. -0.13
-0.13 .. -0.07
-0.07 .. -0.01
-0.01 .. 0.03
0.03 .. 0.08
0.08 .. 0.12
0.12 .. 0.16
0.16 .. 0.20
0.20 .. 0.26
0.26 .. 0.34
0.34 .. 0.44
0.44 .. 0.55
0.55 .. 0.69
0.69 .. 0.87
0.87 .. 1.09
1.09 .. 1.41
1.41 .. 1.92
1.92 .. 2.84
2.84 .. 4.35
4.35 .. 6.30
6.30 .. 15.63
15.63 .. 350.00
>= 350.00

Plangebied (indicatief)

Bijlage 5

Bijlage 5.1 Bodemkaart, overzicht

Bijlage 5.2 Bodemkaart, Willem Anna Polder

Bijlage 5.3 Bodemkaart, Kruiningen

Bijlage 5.4 Bodemkaart, Rilland West en Oost

Bodemkaart

02-01-2013

Overzicht (WAP, Kruiningen, Rilland West en Oost)

76323 / 394853

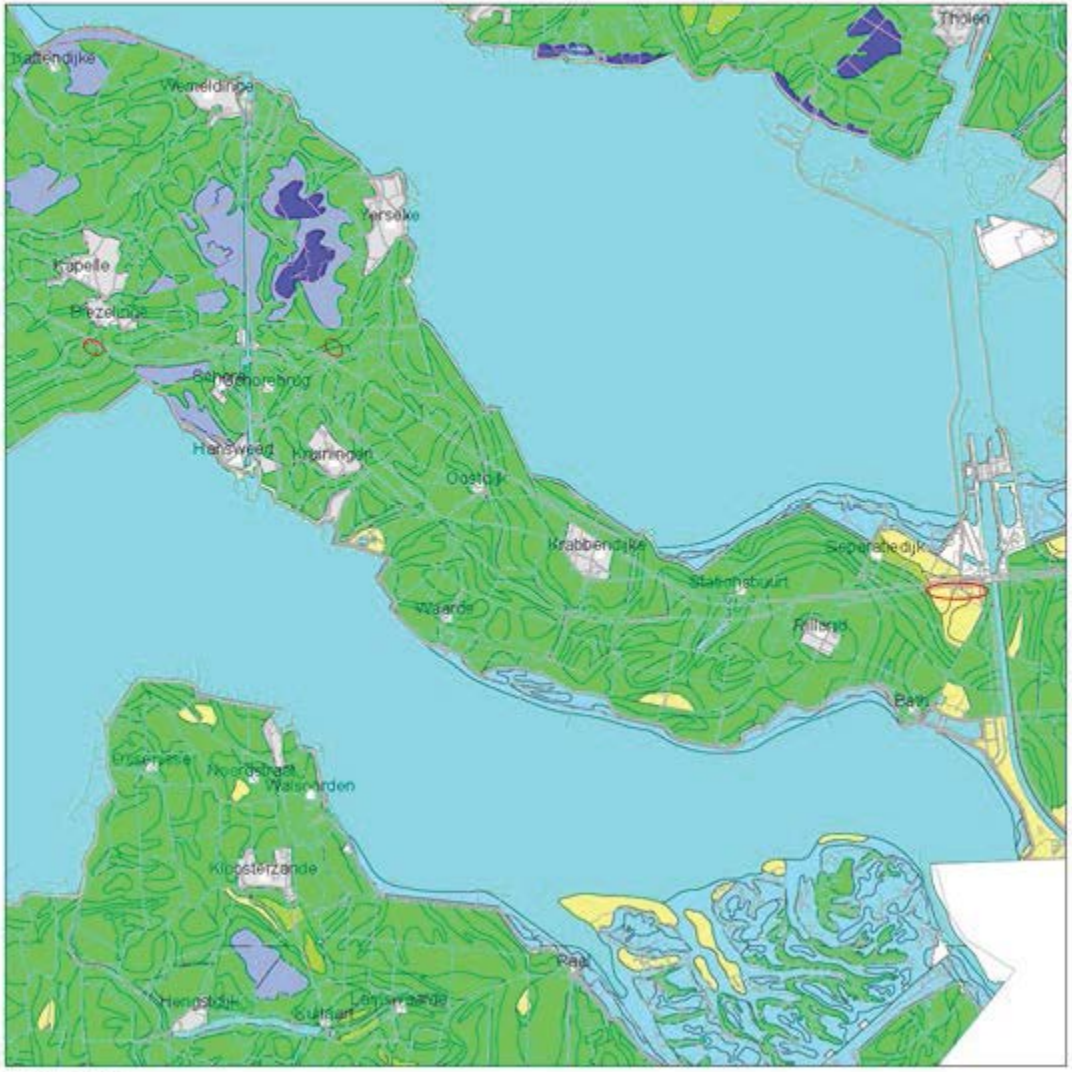

53938 / 372468

Legenda

TOPS0_CBS ((c)CBS)

PLAATSNAMEN

BODEM ((c)Alterra)

- Associaties
- Brikgronden
- Bebouwing
- Dijk, bovenlandstrook
- Dikke eerdgronden
- Fluviatiele afz ouder pleistoceen
- Groeve, gegraven, mijnstort
- Kalksteenverweringsgronden
- Oude rivierkleigronden
- Overige oude kleigronden
- Ondiepe keileemgronden
- Leemgronden
- Zeekleigronden
- Mariene afz ouder pleistoceen
- Niet-gerijpte minerale gronden
- Oude bewoningsplaatsen
- Rivierkleigronden
- Kalkh lutumarme gronden
- Veengronden
- Moerige gronden
- Water, moeras
- Podzolgronden
- Kalkloze zandgronden
- Kalkhoudende zandgronden

Plangebieden (indicatief)

0 5 km

N

Archis2

Rijksdienst voor het Cultureel Erfgoed
Ministerie van Onderwijs, Cultuur en Wetenschap

Bodemkaart

Willem Anna Polder (WAP)

02-01-2013

58401 / 389615

53924 / 385138

Legenda

HUIZEN

TOP10 ((c)TDN)

PLAATSNAMEN

BODEM ((c)Alterra)

- Associaties
- Brikgronden
- Bebouwing
- Dijk, bovenlandstrook
- Dikke eerdgronden
- Fluviatiele afz ouder pleistoceen
- Groeve, gegraven, mijnstort
- Kalksteenverweringsgronden
- Oude rivierkleigronden
- Overige oude kleigronden
- Ondiepe keileemgronden
- Leemgronden
- Zeekleigronden
- Mariene afz ouder pleistoceen
- Niet-gerijpte minerale gronden
- Oude bewoningsplaatsen
- Rivierkleigronden
- Kalkh lutumarme gronden
- Veengronden
- Moerige gronden
- Water, moeras
- Podzolgronden
- Kalkloze zandgronden
- Kalkhoudende zandgronden

Plangebied (indicatief)

0 — 1 km

N

Archis2

Rijksdienst voor het Cultureel Erfgoed
Ministerie van Onderwijs, Cultuur en Wetenschap

Bodemkaart

Kruiningen

02-01-2013

62924 / 389816

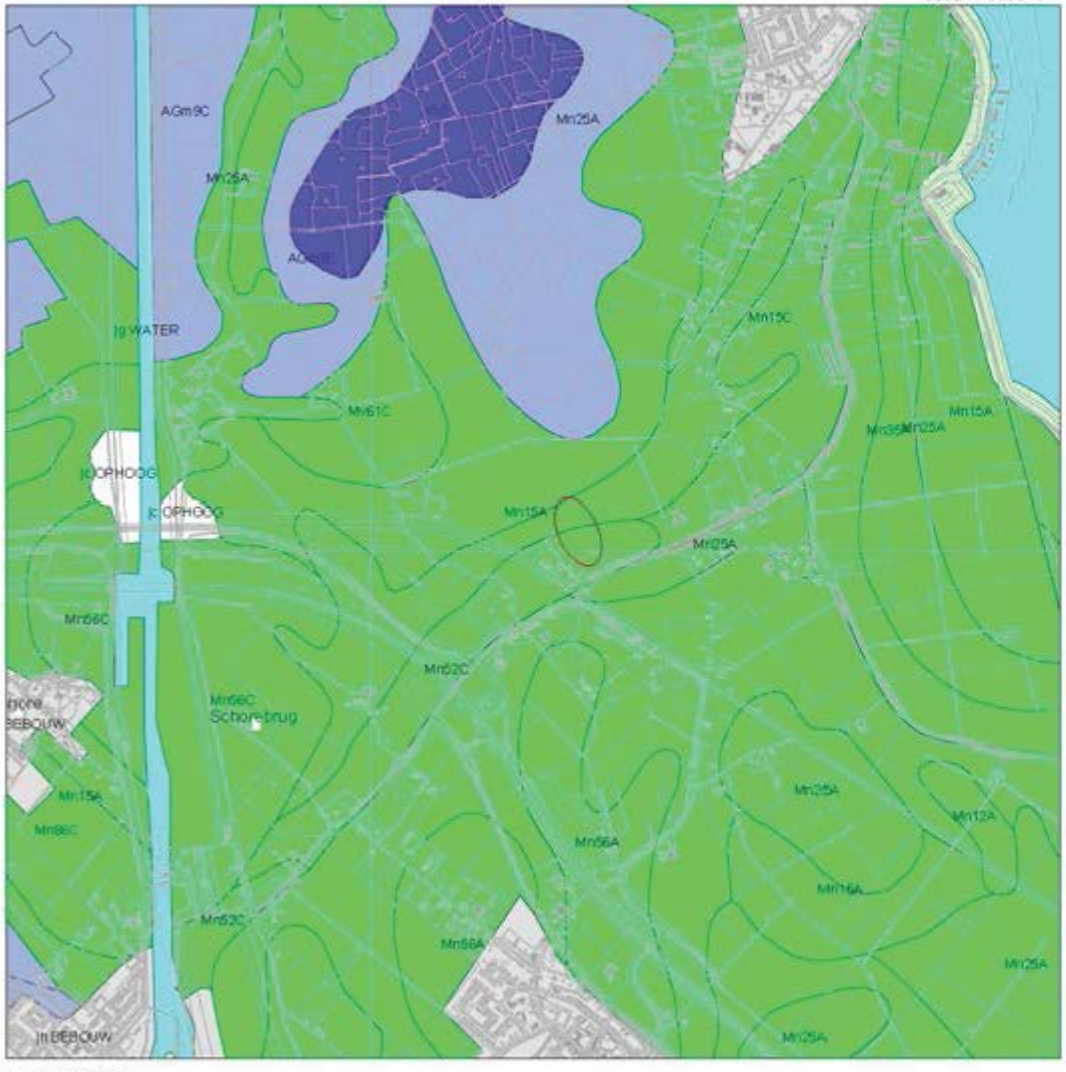

58447 / 385339

Legenda

HUIZEN

TOP10 ((c)TDN)

PLAATSNAMEN

BODEM ((c)Alterra)

- Associaties
- Brikgronden
- Bebouwing
- Dijk, bovenlandstrook
- Dikke eerdgronden
- Fluviatiele afz ouder pleistoceen
- Groeve, gegraven, mijnstort
- Kalksteenverweringsgronden
- Oude rivierkleigronden
- Overige oude kleigronden
- Ondiepe keileemgronden
- Leemgronden
- Zeekleigronden
- Mariene afz ouder pleistoceen
- Niet-gerijpte minerale gronden
- Oude bewoningsplaatsen
- Rivierkleigronden
- Kalkh lutumarme gronden
- Veengronden
- Moerige gronden
- Water, moeras
- Podzolgronden
- Kalkloze zandgronden
- Kalkhoudende zandgronden

Plangebied (indicatief)

0 1 km

N

Archis2

Rijksdienst voor het Cultureel Erfgoed
Ministerie van Onderwijs, Cultuur en Wetenschap

Bodemkaart

Rilland West en Oost

02-01-2013

76013 / 384710

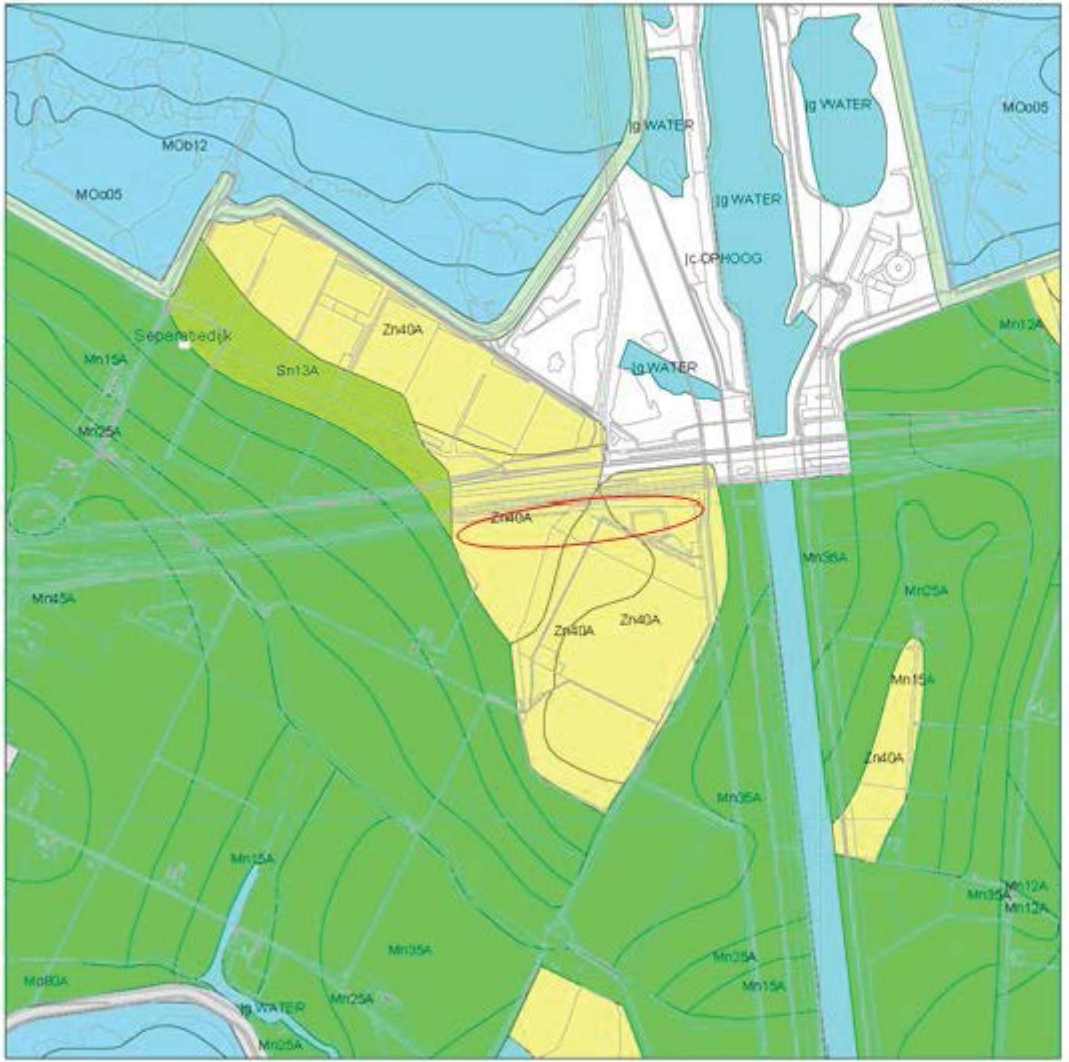

71535 / 380233

Legenda

HUIZEN

TOP10 ((c)TDN)

PLAATSNAMEN

BODEM ((c)Alterra)

- Associaties
- Brikgronden
- Bebouwing
- Dijk, bovenlandstrook
- Dikke eerdgronden
- Fluviatiele afz ouder pleistoceen
- Groeve, gegraven, mijnstort
- Kalksteenverweesingsgronden
- Oude rivierkleigronden
- Overige oude kleigronden
- Ondiepe keileemgronden
- Leemgronden
- Zeekleigronden
- Mariene afz ouder pleistoceen
- Niet-gerijpte minerale gronden
- Oude bewoningsplaatsen
- Rivierkleigronden
- Kalkh lutumarme gronden
- Veengronden
- Moerige gronden
- Water, moeras
- Podzolgronden
- Kalkloze zandgronden
- Kalkhoudende zandgronden

Plangebied (indicatief)

0 1 km

N

Archis2

Rijksdienst voor het Cultureel Erfgoed
Ministerie van Onderwijs, Cultuur en Wetenschap

Bijlage 6

Bijlage 6.1 Bekende archeologische waarden en verwachting, overzicht

Bijlage 6.2 Bekende archeologische waarden en verwachting, Willem Anna Polder

Bijlage 6.3 Bekende archeologische waarden en verwachting, Kruiningen

Bijlage 6.4 Bekende archeologische waarden en verwachting, Rilland West en Oost

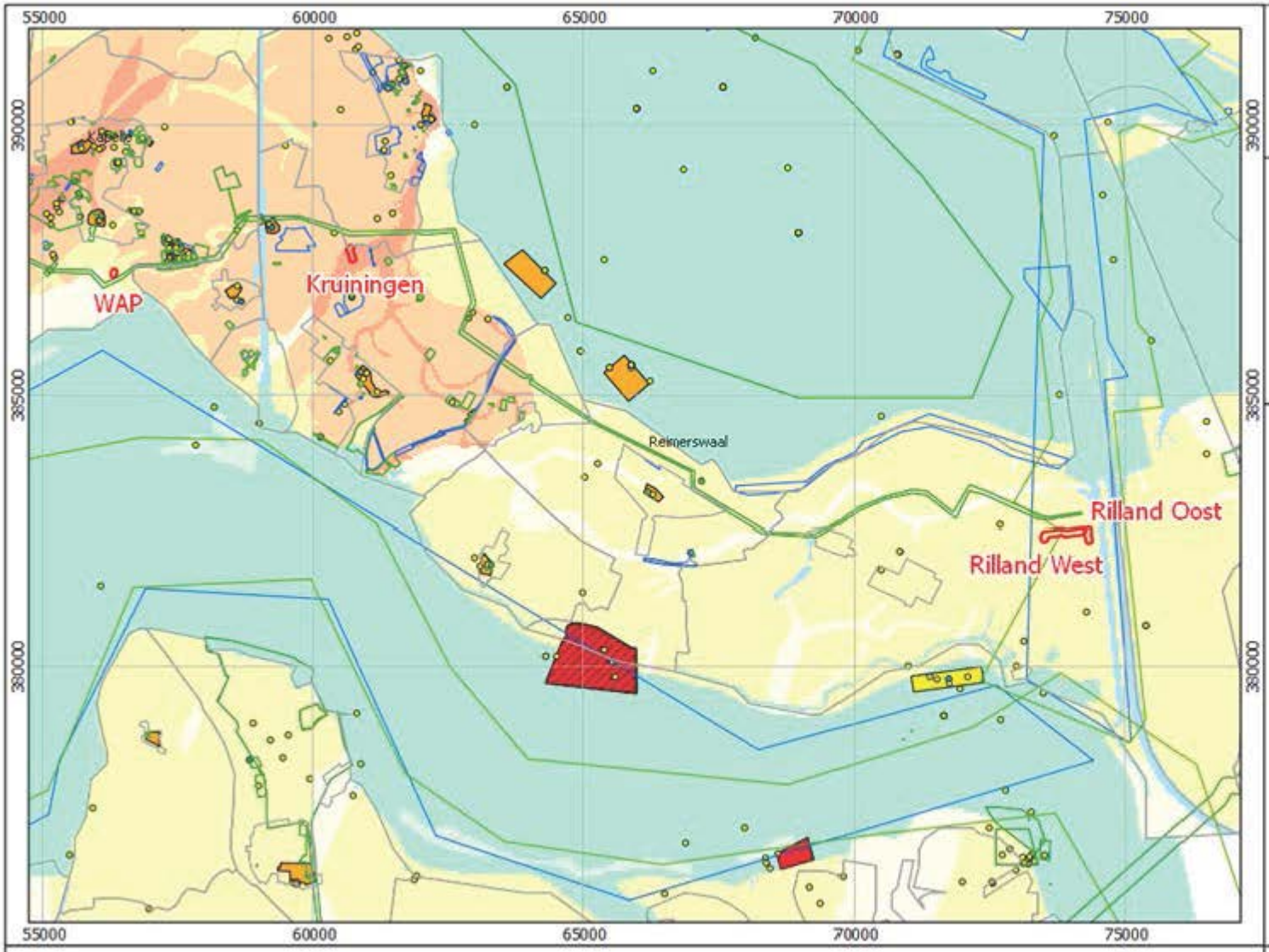

Overzichtskaart

Hoogspanningsverbinding Zuid-West 380 kV, deeltracé 2

Legenda

Onderzoek

Onderzoeksmelding

Vondstmelding

Waarneming

Monument

- Terrein van archeologische waarde
- Terrein van hoge archeologische waarde
- Terrein van zeer hoge archeologische waarde
- Terrein van zeer hoge archeologische waarde, beschermd

0 1000 2000 3000 4000 5000 m

transect: *archeologie, erfgoed, ruimte*

Bekende archeologische waarden

02-01-2013

Willem Anna Polder

58401 / 389615

53924 / 385138

Legenda

- VONDSTMELDINGEN
- WAARNEMINGEN
- ONDERZOEKEN
- ONDERZOEKSMELDINGEN
- HUIZEN
- TOP10 ((c)TDN)
- PLAATSNAMEN

MONUMENTEN

- archeologische waarde
- hoge archeologische waarde
- zeer hoge archeologische waarde
- zeer hoge arch waarde, beschermd

IKAW

- zeer lage trefkans
- lage trefkans
- middelhoge trefkans
- hoge trefkans
- lage trefkans (water)
- middelhoge trefkans (water)
- hoge trefkans (water)
- water
- niet gekarteerd

Plangebied (indicatief)

Onderzoekscluster

0 1 km

N

Archis2

Rijksdienst voor het Cultureel Erfgoed
Ministerie van Onderwijs, Cultuur en Wetenschap

Bekende archeologische waarden

Kruiningen

02-01-2013

62924 / 389816

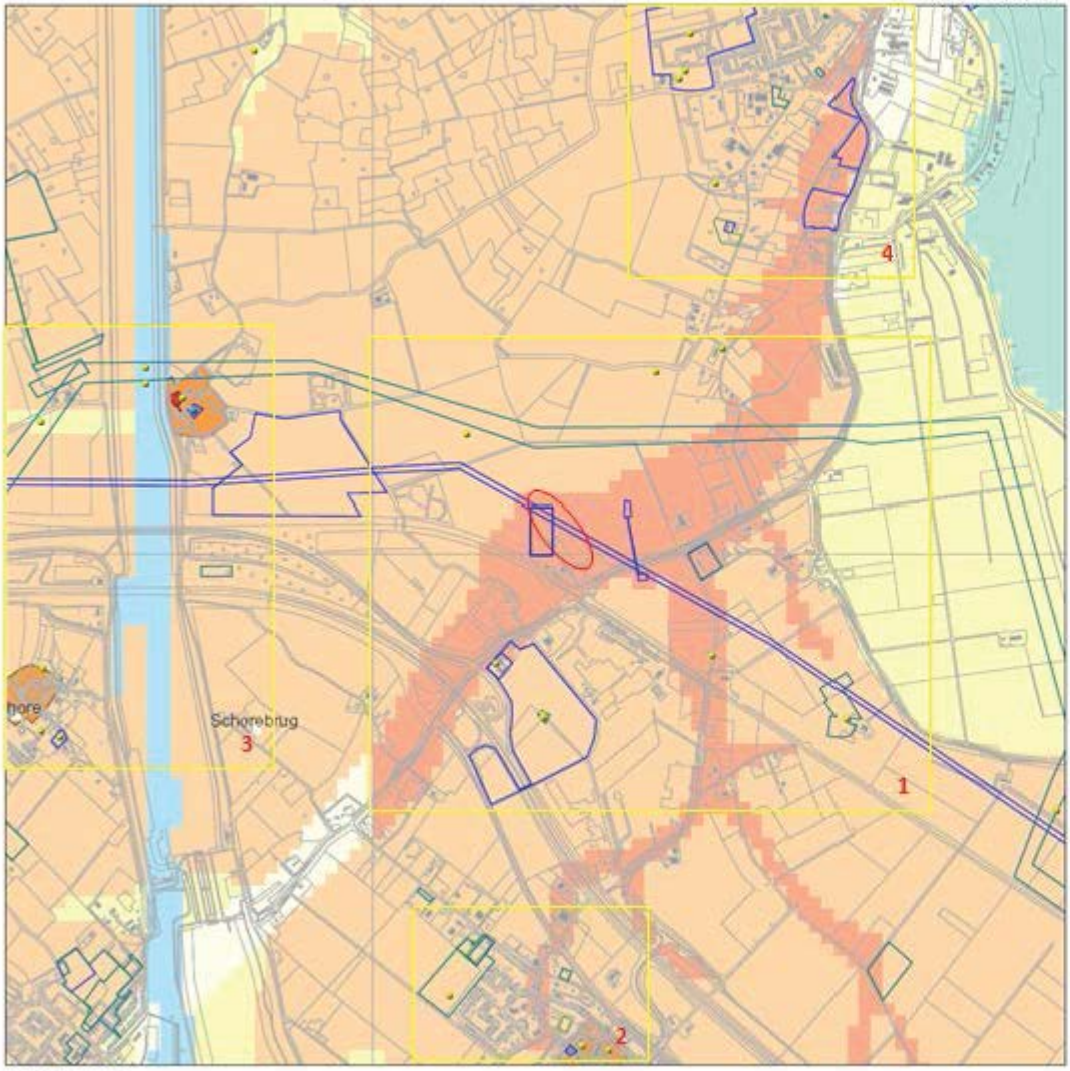

58447 / 385339

Legenda

- VONDSTMELDINGEN
- WAARNEMINGEN
- ONDERZOEKEN
- ONDERZOEKSMELDINGEN
- HUIZEN
- TOP10 ((c)TDN)
- PLAATSNAMEN

MONUMENTEN

- archeologische waarde
- hoge archeologische waarde
- zeer hoge archeologische waarde
- zeer hoge arch waarde, beschermd

IKAW

- zeer lage trefkans
- lage trefkans
- middelhoge trefkans
- hoge trefkans
- lage trefkans (water)
- middelhoge trefkans (water)
- hoge trefkans (water)
- water
- niet gekarteerd

Plangebied (indicatief)

Onderzoeksduster

0 1 km

N

Archis2

Rijksdienst voor het Cultureel Erfgoed
Ministerie van Onderwijs, Cultuur en Wetenschap

Bekende archeologische waarden

Rilland West en Oost

02-01-2013

76013 / 384710

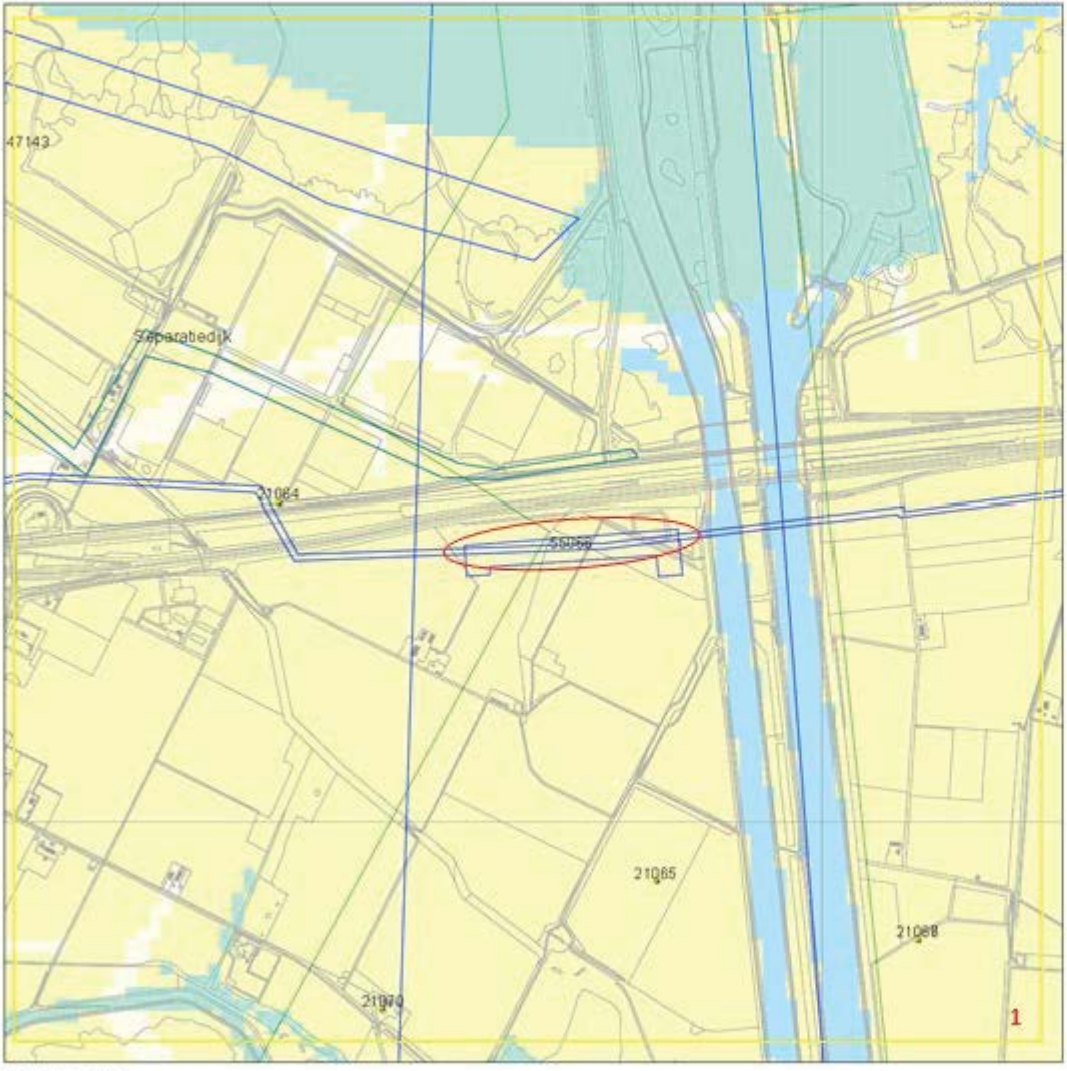

71535 / 380233

Legenda

- VONDSTMELDINGEN
- WAARNEMINGEN
- ONDERZOEKEN
- ONDERZOEKSMELDINGEN
- HUIZEN
- TOP10 ((c)TDN)
- PLAATSNAMEN

MONUMENTEN

- archeologische waarde
- hoge archeologische waarde
- zeer hoge archeologische waarde
- zeer hoge arch waarde, beschermd

IKAW

- zeer lage trefkans
- lage trefkans
- middelhoge trefkans
- hoge trefkans
- lage trefkans (water)
- middelhoge trefkans (water)
- hoge trefkans (water)
- water
- niet gekarteerd

Plangebied (indicatief)

Onderzoekscluster

0 1 km

N

Archis2

Rijksdienst voor het Cultureel Erfgoed
Ministerie van Onderwijs, Cultuur en Wetenschap

Colofon

BUREAUONDERZOEK ARCHEOLOGIE HOOGSPANNINGSVERBINDING ZUID-WEST 380 KV DEELTRACÉ 2: WILLEM ANNA POLDER, KRUININGEN, RILLAND WEST, RILLAND OOST (GEMEENTEN KAPELLE EN REIMERSWAAL)

OPDRACHTGEVER:

Tennet TSO BV

STATUS:

Concept

AUTEUR:

H.G. Pape

GECONTROLEERD DOOR:

T. Vanderhoeven
T. Nales

VRIJGEGEVEN DOOR:

T. Vanderhoeven

8 februari 2013
076922603:0.2

ARCADIS NEDERLAND BV
Utopialaan 40-48
Postbus 1018
5200 BA 's-Hertogenbosch
Tel 073 6809 211
Fax 073 6144 606
www.arcadis.nl
Handelsregister 9036504

©ARCADIS. Alle rechten voorbehouden. Behoudens uitzonderingen door de wet gesteld, mag zonder schriftelijke toestemming van de rechthebbenden niets uit dit document worden verveelvoudigd en/of openbaar worden gemaakt door middel van druk, fotokopie, digitale reproductie of anderszins.